URA601: Robotics Systems Simulation

Autonomous Firefighting Robot

THAPAR INSTITUTE
OF ENGINEERING & TECHNOLOGY
(Deemed to be University)

Subgroup: 3W11

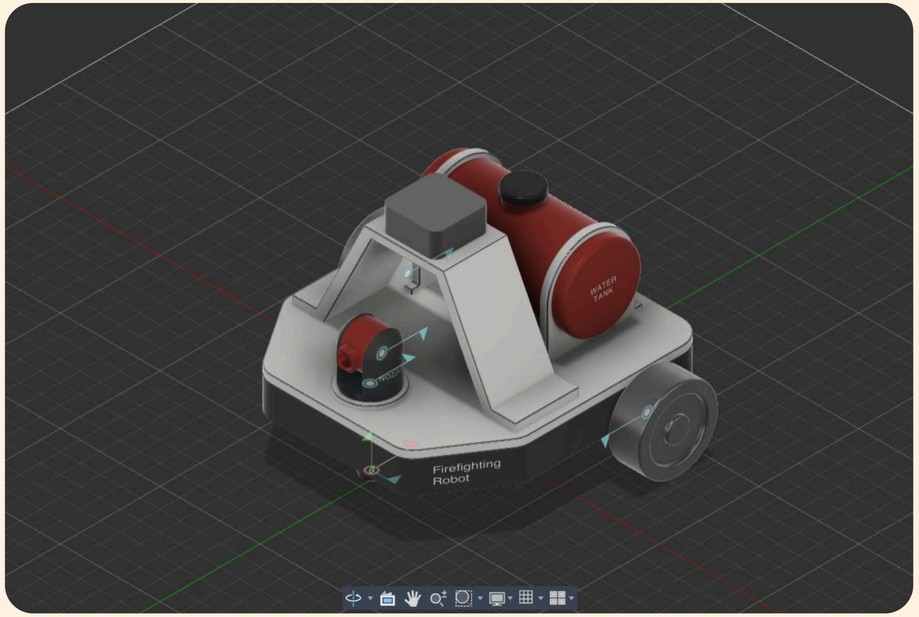

Objective: To design, simulate, and control a differential-drive robot capable of navigating a hazardous environment and precisely aiming a water nozzle to extinguish fires.

Team members:

Arin Goyal - 102323006
Avtesh Singh - 102323016
Parth Chhabra - 102323007

Submitted To:

Dr. Raja Rout

Robot Design & Simulation Framework

- **Parameters:** Differential drive chosen for zero-turn radius in tight spaces; revolute nozzle joint added for vertical aiming.
- **3D Modeling:** Designed in CAD, exported to URDF/Xacro, and manually tuned to correct coordinate axes and collision properties.
- **Gazebo Plugins:** Utilized diff_drive for odometry, gazebo_ros_ray_sensor for LiDAR, and ros2_control to actuate the nozzle.

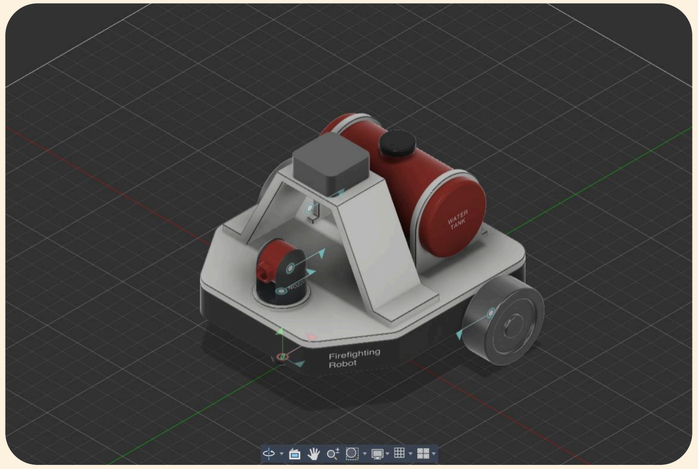

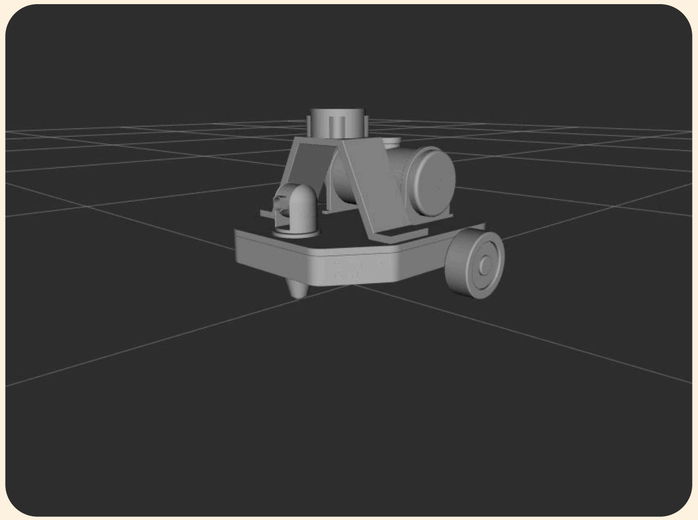

Contributor: Arin Goyal

Custom Simulation Environment

- **Application:** Industrial Warehouse (high risk for electrical/chemical fires).
- **Design:** Created a custom 20x20m Gazebo world.
- **Details:** Built industrial storage racks, an enclosed office room, and scattered crates using native Gazebo textures (Bricks, Metal, WoodPallet) to create a complex environment for the LiDAR to map.

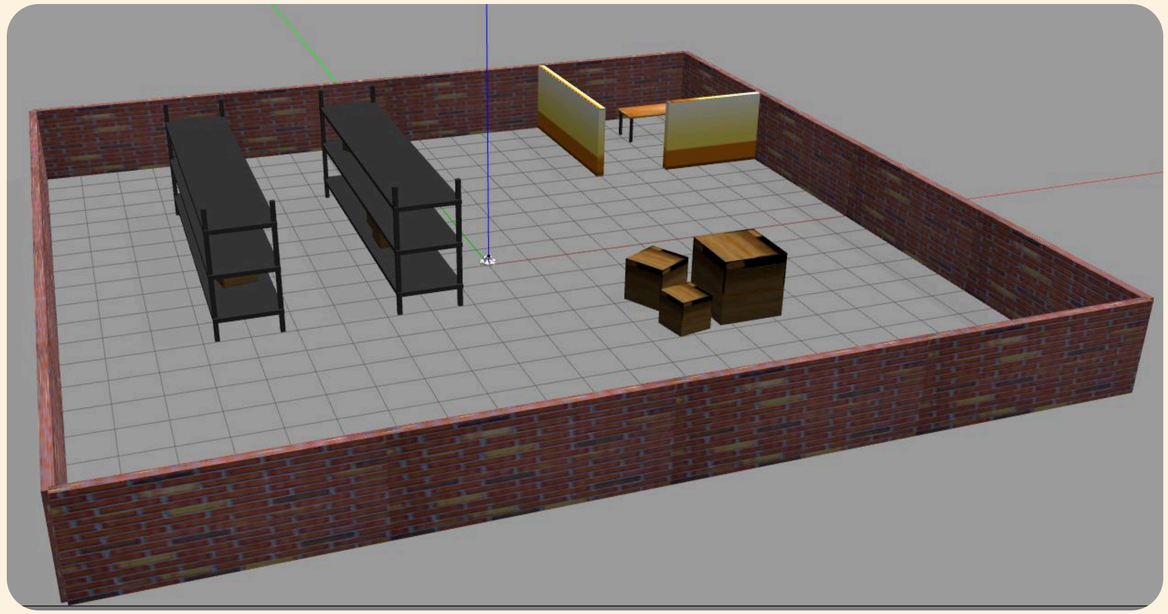

Contributor: Avtesh Singh

Autonomous Control (PID)

- **Teleop:** The diff_drive plugin listens to /cmd_vel for standard keyboard teleop.
- **Autonomy:** We replaced manual teleop with a custom dual-loop Proportional-Integral-Derivative (PID) Python node.
- **Drive Loop:** Uses /odom feedback to calculate Euclidean distance and drives exactly 2.0 meters, smoothly decelerating to a stop.
- **Aim Loop:** Subscribes to /joint_states to precisely raise the nozzle to a 0.5-radian target angle simultaneously.

```
[INFO] [1777962267.350674745] [pid_controller]: PID Controller Node Started! Aiming
for 2.0 meters distance and 0.5 rad nozzle angle.
[INFO] [1777962267.354453757] [pid_controller]: [Drive] Dist: 0.00m/2.0m | Vel: 0.80
[INFO] [1777962267.356101325] [pid_controller]: [Drive] Dist: 0.00m/2.0m | Vel: 0.80
[INFO] [1777962267.394095331] [pid_controller]: [Drive] Dist: 0.00m/2.0m | Vel: 0.80
[INFO] [1777962267.448495964] [pid_controller]: [Drive] Dist: 0.00m/2.0m | Vel: 0.80
[INFO] [1777962267.491857054] [pid_controller]: [Drive] Dist: 0.00m/2.0m | Vel: 0.80
[INFO] [1777962267.535680547] [pid_controller]: [Drive] Dist: 0.00m/2.0m | Vel: 0.80
[INFO] [1777962267.575596249] [pid_controller]: [Drive] Dist: 0.01m/2.0m | Vel: 0.80
[INFO] [1777962267.622512950] [pid_controller]: [Drive] Dist: 0.01m/2.0m | Vel: 0.80
[INFO] [1777962267.669585127] [pid_controller]: [Drive] Dist: 0.02m/2.0m | Vel: 0.80
[INFO] [1777962267.713375869] [pid_controller]: [Drive] Dist: 0.03m/2.0m | Vel: 0.80
[INFO] [1777962267.762639020] [pid_controller]: [Drive] Dist: 0.03m/2.0m | Vel: 0.80
[INFO] [1777962267.803780589] [pid_controller]: [Drive] Dist: 0.04m/2.0m | Vel: 0.80
[INFO] [1777962267.858697429] [pid_controller]: [Drive] Dist: 0.05m/2.0m | Vel: 0.80
```

```
[INFO] [1777962271.939327967] [pid_controller]: [Drive] Dist: 1.90m/2.0m | Vel: 0.14
[INFO] [1777962271.979942238] [pid_controller]: [Drive] Dist: 1.91m/2.0m | Vel: 0.13
[INFO] [1777962272.025209356] [pid_controller]: [Drive] Dist: 1.91m/2.0m | Vel: 0.13
[INFO] [1777962272.074653559] [pid_controller]: [Drive] Dist: 1.92m/2.0m | Vel: 0.12
[INFO] [1777962272.120404580] [pid_controller]: [Drive] Dist: 1.92m/2.0m | Vel: 0.11
[INFO] [1777962272.170800349] [pid_controller]: [Drive] Dist: 1.93m/2.0m | Vel: 0.11
[INFO] [1777962272.208604478] [pid_controller]: [Drive] Dist: 1.93m/2.0m | Vel: 0.10
[INFO] [1777962272.256525901] [pid_controller]: [Drive] Dist: 1.93m/2.0m | Vel: 0.10
[INFO] [1777962272.296061468] [pid_controller]: [Drive] Dist: 1.94m/2.0m | Vel: 0.09
[INFO] [1777962272.343489675] [pid_controller]: [Drive] Dist: 1.94m/2.0m | Vel: 0.09
[INFO] [1777962272.388596418] [pid_controller]: [Drive] Dist: 1.94m/2.0m | Vel: 0.08
[INFO] [1777962272.443369127] [pid_controller]: [Drive] Dist: 1.95m/2.0m | Vel: 0.08
[INFO] [1777962272.481502553] [pid_controller]: [Drive] Dist: 1.95m/2.0m | Vel: 0.07
[INFO] [1777962299.643121119] [pid_controller]: [Drive] Dist: 1.95m/2.0m | Vel: 0.07
```

Contributor: Parth Chhabra

Advanced Mapping & SLAM

- **Algorithm:** Integrated the open-source slam_toolbox package.
- **Sensor Fusion:** Combines raw LiDAR data (/scan) with wheel odometry (/odom).
- **TF2 Tree:** Maintained a continuous spatial link from the odometry origin to the laser scanner.
- **Result:** The robot autonomously generates a highly accurate 2D grid map of the warehouse while navigating to the fire.

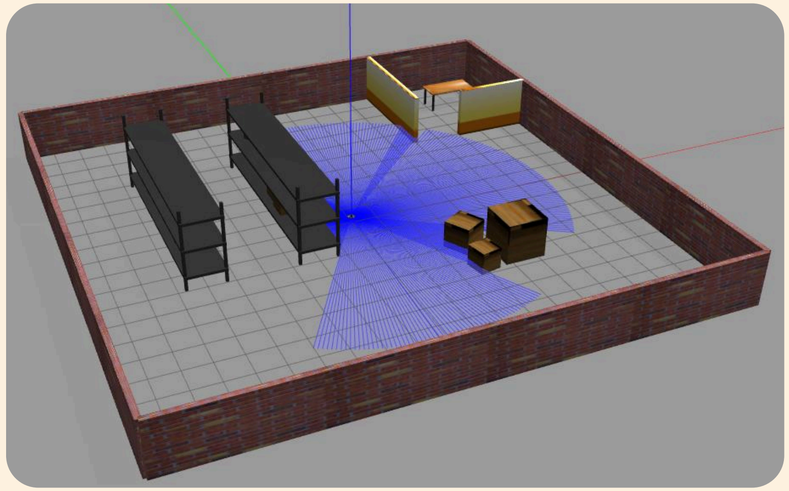

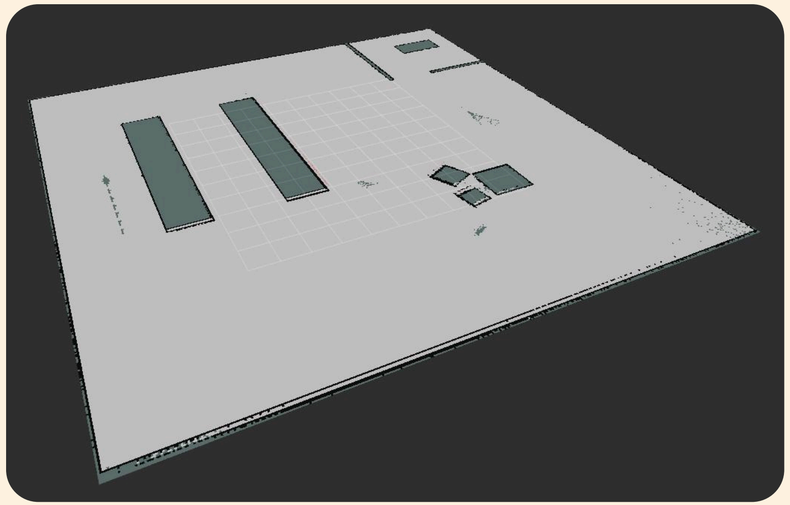

Contributor: Arin Goyal

Thank You