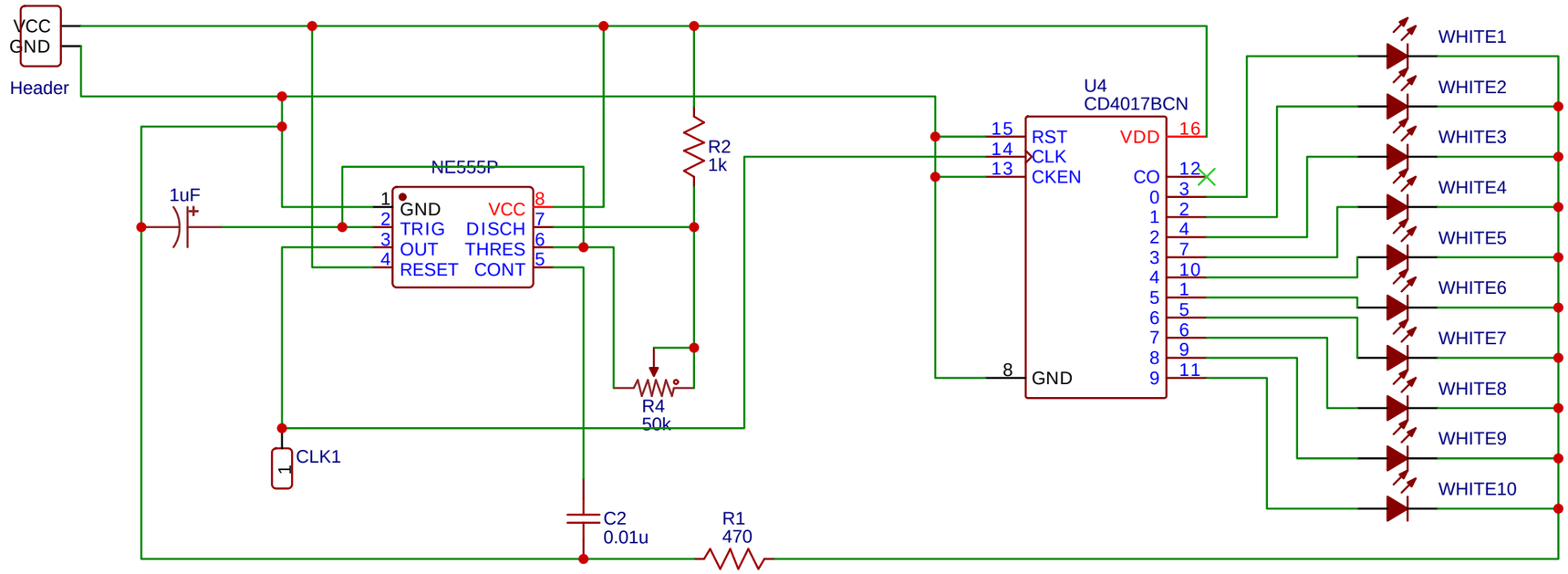

TITLE: Led Chaser		REV: 1.0
EasyEDA	Company: Chan Corporations	Sheet: 1/1
	Date: 2025-10-19 Drawn By: arischaneasyeda	