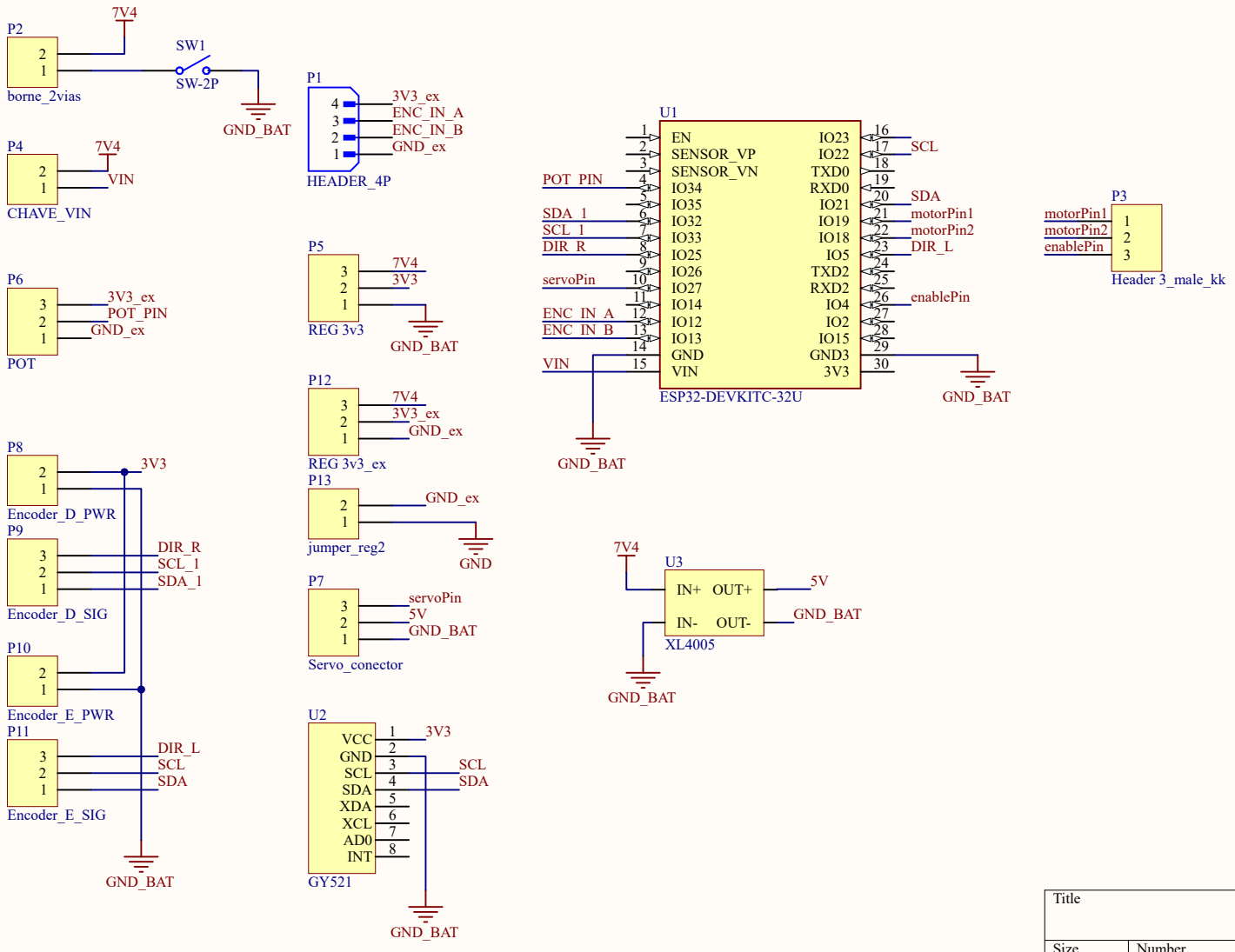

Title		
Size A4	Number	Revision
Date: 2/23/2024	Sheet of	
File: D:\OneDrive - uea.edu.br\..\esquema_car.PrjPcb	Drawn By:	