RBE 500 Homework #2

Arjan Gupta

Problem 3.5

Consider the three-link articulated robot of Figure 3.16. Derive the forward kinematic equations using the DH convention.

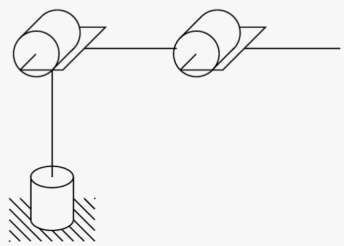

Figure 3.16: Three-link articulated robot.

Solution

First we assign coordinate frames 0 through 3 (links 0 through 3). This is done as per the following figure.

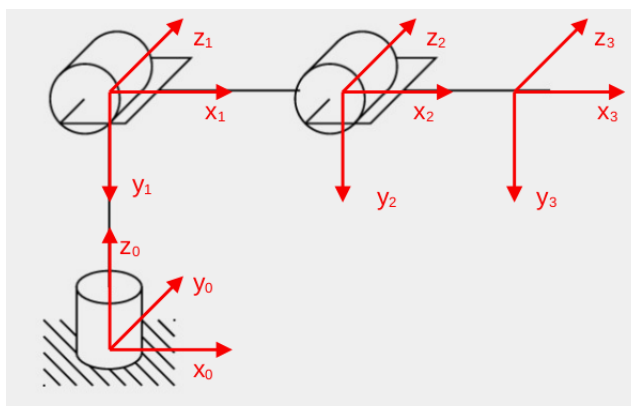

Now, we create a table for quantities $\alpha_i, a_i, \theta_i, d_i$ for links 1 through 3.

Link	α_i	a_i	θ_i	d_i
1	-90°	0	θ_1	d_1
2	0	a_2	θ_2	0
3	0	a_3	θ_3	0

Next, we use the matrix obtained from equation 3.10 of the textbook to calculate A_1, A_2, A_3.

$$A_1 = \begin{bmatrix} \cos\theta_1 & -\sin\theta_1\cos(-90°) & \sin\theta_1\sin(-90°) & 0\cdot\cos\theta_1 \\ \sin\theta_1 & \cos\theta_1\cos(-90°) & -\cos\theta_1\sin(-90°) & 0\cdot\sin\theta_1 \\ 0 & \sin(-90°) & \cos(-90°) & d_1 \\ 0 & 0 & 0 & 1 \end{bmatrix} = \begin{bmatrix} c_1 & 0 & -s_1 & 0 \\ s_1 & 0 & c_1 & 0 \\ 0 & -1 & 0 & d_1 \\ 0 & 0 & 0 & 1 \end{bmatrix}$$

Where $s_1 = \sin\theta_1$ and $c_1 = \cos\theta_1$. Similarly,

Problem 3.5 continued on next page. . .

$$A_2 = \begin{bmatrix} c_2 & -s_2 & 0 & a_2 c_2 \\ s_2 & c_2 & 0 & a_2 s_2 \\ 0 & 0 & 1 & 0 \\ 0 & 0 & 0 & 1 \end{bmatrix}, A_3 = \begin{bmatrix} c_3 & -s_3 & 0 & a_3 c_3 \\ s_3 & c_3 & 0 & a_3 s_3 \\ 0 & 0 & 1 & 0 \\ 0 & 0 & 0 & 1 \end{bmatrix}$$

Now we can find $T_3^0 = A_1 A_2 A_3$. We use the following MATLAB code to compute this.

```
% Calculation code for problem 3.5 of the RBE500 textbook (HW 2)

clear; close all; clc;

syms c1 s1 d1 c2 s2 a2 c3 s3 a3;
A1 = [c1 0 -s1 d1; s1 0 c1 0; 0 -1 0 d1; 0 -1 0 d1; 0 0 0 1];
A2 = [c2 -s2 0 a2*c2; s2 c2 0 a2*s2; 0 0 1 0; 0 0 0 1];
A3 = [c3 -s3 0 a3*c3; s3 c3 0 a3*s3; 0 0 1 0; 0 0 0 1];

T = A1*A2*A3;

% Generate LaTex code
latex(T)
```

Therefore,

$$T_3^0 = \begin{bmatrix} c_1\,c_2\,c_3 - c_1\,s_2\,s_3 & -c_1\,c_2\,s_3 - c_1\,c_3\,s_2 & -s_1 & d_1 + a_2\,c_1\,c_2 - a_3\,c_1\,s_2\,s_3 + a_3\,c_1\,c_2\,c_3 \\ c_2\,c_3\,s_1 - s_1\,s_2\,s_3 & -c_2\,s_1\,s_3 - c_3\,s_1\,s_2 & c_1 & a_2\,c_2\,s_1 - a_3\,s_1\,s_2\,s_3 + a_3\,c_2\,c_3\,s_1 \\ -c_2\,s_3 - c_3\,s_2 & s_2\,s_3 - c_2\,c_3 & 0 & d_1 - a_2\,s_2 - a_3\,c_2\,s_3 - a_3\,c_3\,s_2 \\ -c_2\,s_3 - c_3\,s_2 & s_2\,s_3 - c_2\,c_3 & 0 & d_1 - a_2\,s_2 - a_3\,c_2\,s_3 - a_3\,c_3\,s_2 \\ 0 & 0 & 0 & 1 \end{bmatrix}$$

This gives the configuration of frame 3 with respect to the base frame (frame 0).

Problem 3.6

Consider the three-link Cartesian manipulator of Figure 3.17. Derive the forward kinematic equations using the DH convention.

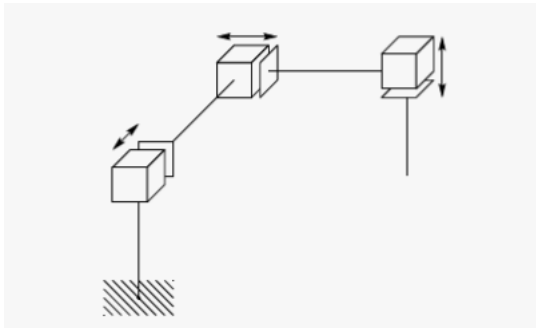

Figure 3.17: Three-link Cartesian robot.

Solution

First we assign coordinate frames 0 through 3 (links 0 through 3). This is done as per the following figure.

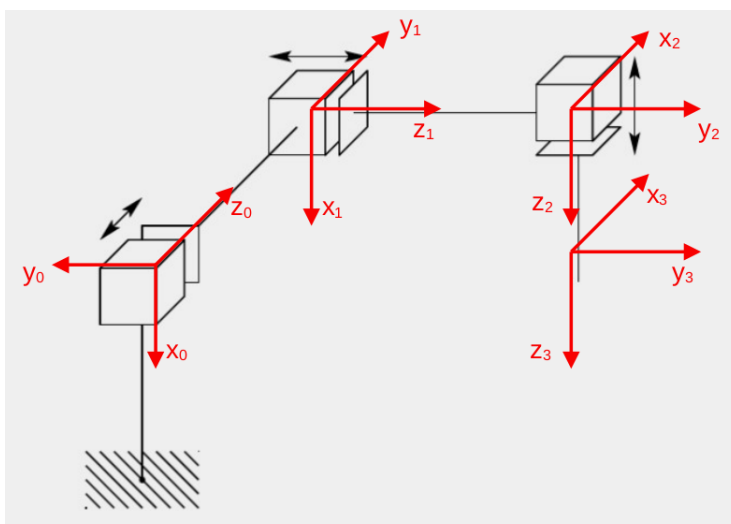

Now, we create a table for quantities $\alpha_i, a_i, \theta_i, d_i$ for links 1 through 3.

Link	α_i	a_i	θ_i	d_i
1	90°	0	0	d_1
2	90°	0	90°	d_2
3	0	0	0	d_3

Next, we use the matrix obtained from equation 3.10 of the textbook to calculate A_1, A_2, A_3.

Problem 3.6 continued on next page. . .

$$A_1 = \begin{bmatrix} 1 & 0 & 0 & 0 \\ 0 & 0 & -1 & 0 \\ 0 & 1 & 0 & d_1 \\ 0 & 0 & 0 & 1 \end{bmatrix}, A_2 = \begin{bmatrix} 0 & 0 & 1 & 0 \\ 1 & 0 & 0 & 0 \\ 0 & 1 & 0 & d_2 \\ 0 & 0 & 0 & 1 \end{bmatrix}, A_3 = \begin{bmatrix} 1 & 0 & 0 & 0 \\ 0 & 1 & 0 & 0 \\ 0 & 0 & 1 & d_3 \\ 0 & 0 & 0 & 1 \end{bmatrix}$$

Now we can find $T_3^0 = A_1 A_2 A_3$. We use the following MATLAB code to compute this.

```
% Calculation code for problem 3.6 of the RBE500 textbook (HW 2)

clear; close all; clc;

syms d1 d2 d3;
A1 = [1 0 0 0; 0 0 -1 0; 0 1 0 d1; 0 0 0 1];
A2 = [0 0 1 0; 1 0 0 0; 0 1 0 d2; 0 0 0 1];
A3 = [1 0 0 0; 0 1 0 0; 0 0 1 d3; 0 0 0 1];

T = A1*A2*A3;

% Generate LaTex code
latex(T)
```

Therefore,

$$T_3^0 = \begin{bmatrix} 0 & 0 & 1 & d_3 \\ 0 & -1 & 0 & -d_2 \\ 1 & 0 & 0 & d_1 \\ 0 & 0 & 0 & 1 \end{bmatrix}$$

This gives the configuration of frame 3 with respect to the base frame (frame 0).

Problem 5.3

Solve the inverse position kinematics for the cylindrical manipulator of Figure 5.15.

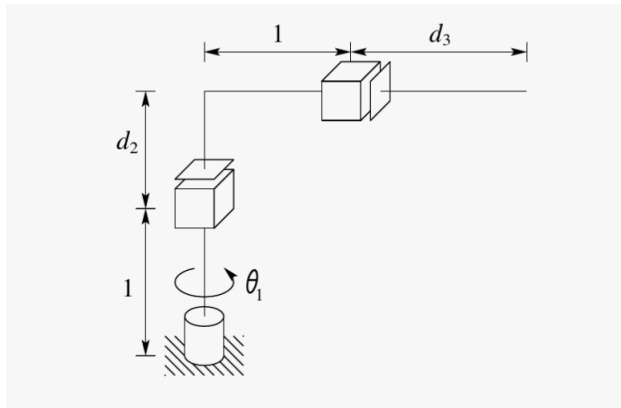

Figure 5.15: Cylindrical configuration.

Solution

Let us draw the base frame's axes $x_0 y_0 z_0$ as shown in the figure below. Also, let us select a point (x_c, y_c, z_c) as the wrist center at the far end of the second prismatic joint, as shown.

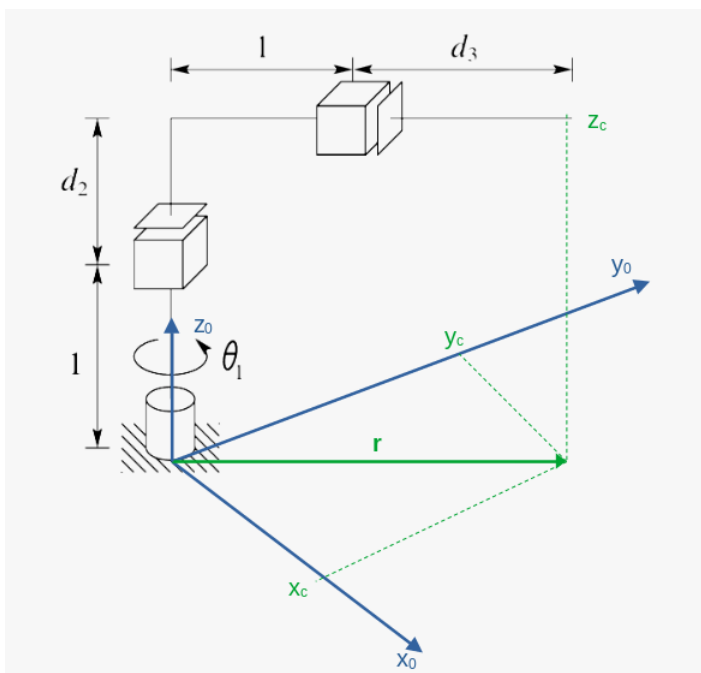

To solve the inverse position kinematics problem for this configuration, we need to find q_1, q_2, q_3, or more precisely, θ_1, d_2, d_3.

Using the $Atan2()$ algorithmic function as described in the appendix of the textbook, we determine from the figure that,

Problem 5.3 continued on next page. . .

$$\boxed{\theta_1 = Atan2(x_c, y_c)}$$

or, alternatively,

$$\boxed{\theta_1 = \pi + Atan2(x_c, y_c)}$$

Furthermore, it is apparent that

$$z_c = 1 + d_2$$
$$\boxed{d_2 = z_c - 1}$$

We also see from the figure that

$$r = \sqrt{{x_c}^2 + {y_c}^2}$$

But,

$$r = 1 + d_3$$

So,

$$\boxed{d_3 = \sqrt{{x_c}^2 + {y_c}^2} - 1}$$

This solves the inverse position kinematics problem for the given cylindrical configuration.

Problem 5.5

Add a spherical wrist to the three-link cylindrical arm of Problem 5–3 and write the complete inverse kinematics solution.

Solution

Let us consider a spherical wrist identical to the one used in the textbook. We attach this spherical wrist such that the wrist center, now denoted by vector o_c, coincides with the point (x_c, y_c, z_c) as we found in Problem 5–3. We have concluded that the wrist center lies at this point because axes z_3, z_4, z_5 intersect at this point. This point is also where the origins o_3, o_4, o_5 lie as per the frame assignment by DH conventions. We also know that the position of o_c does not change despite $\theta_4, \theta_5, \theta_6$ being variables.

Also, for the sake of clearly denoting d_3 as joint variable q_3, we have now used u_3 in the figure. It is still the same distance found in Problem 5–3, i.e. $u_3 = \sqrt{{x_c}^2 + {y_c}^2} - 1$. Given our placement of frame 2, we now have $d_3 = u_3 + 1$. Therefore, $q_3 = d_3 = \sqrt{{x_c}^2 + {y_c}^2}$.

An additional thing to note is that although z_6 is along the same direction as z_5, the coordinates of o_6 lie on the point shown by the vector o_6.

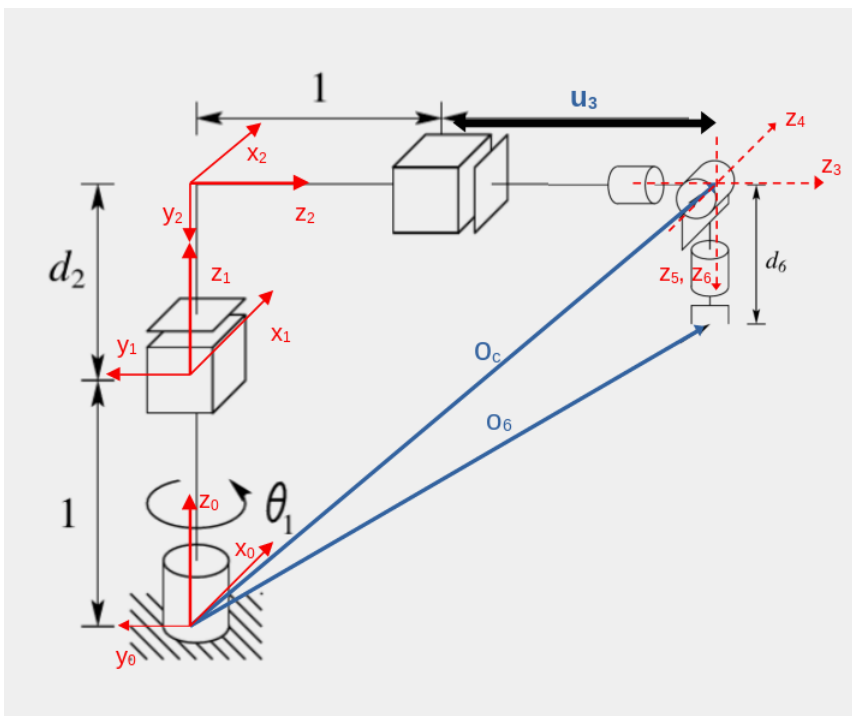

Before we proceed further, let us make a brief list of steps we need to take to solve the complete inverse kinematics problem for our particular manipulator's configuration.

1. Find wrist center o_c.
2. Find $q1, q2, q3$.
3. Perform forward kinematics to arrive at $R_3^0 = (R_0^3)^T$.
4. Get $R_6^3 = R_0^3 R_6^0$.

Problem 5.5 continued on next page. . .

5. Use R_6^3 to find ϕ, θ, ψ of Euler configuration to find q_4, q_5, q_6.

In essence, once we have found all joint variables given the end-effector's homogeneous transformation, we have solved the inverse kinematics problem.

Step 1
The end-effector's homogeneous transformation is known to us as the 4×4 matrix

$$H_6^0 = \begin{bmatrix} R_6^0 & o_6^0 \\ 0 & 1 \end{bmatrix}$$

where

$$R_6^0 = \begin{bmatrix} r_{11} & r_{12} & r_{13} \\ r_{21} & r_{22} & r_{23} \\ r_{31} & r_{32} & r_{33} \end{bmatrix}, o_6^0 = \begin{bmatrix} x_6 \\ y_6 \\ z_6 \end{bmatrix}$$

Where o_6^0 is o_6 as shown in the diagram. As shown in the figure, we can establish a relationship between o_6 and o_c as

$$o_c = o_6 - d_6 R_6^0 \begin{bmatrix} 0 \\ 0 \\ 1 \end{bmatrix}$$

$$\begin{bmatrix} x_c \\ y_c \\ z_c \end{bmatrix} = \begin{bmatrix} x_6 - d_6 r_{13} \\ y_6 - d_6 r_{23} \\ z_6 - d_6 r_{33} \end{bmatrix}$$

Where d_6 is a scalar.

Report for ROS2 Portion