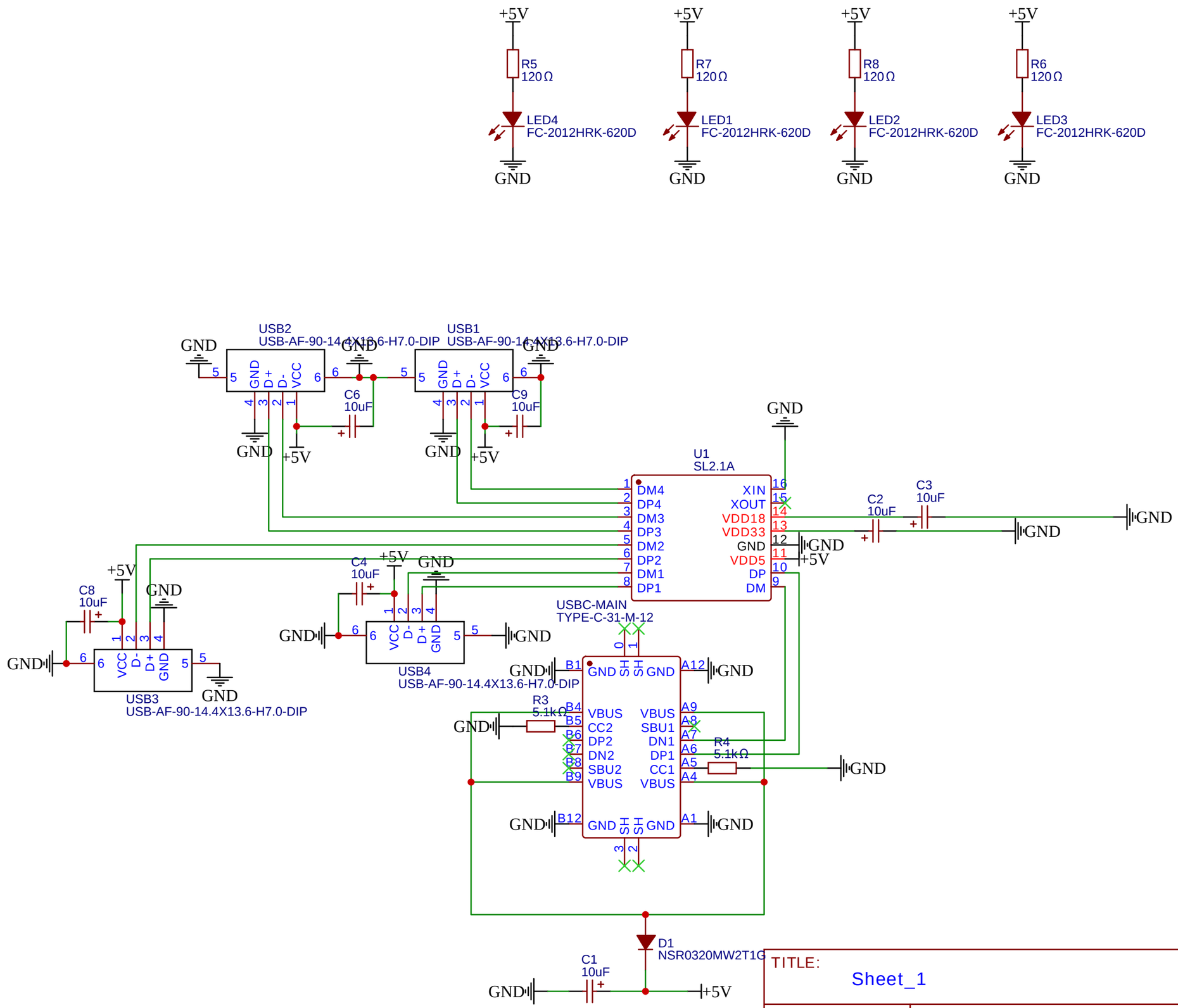

TITLE: Sheet_1	REV: 1.1
Company: Your Company	Sheet: 1/1
Date: 2024-08-18 Drawn By: thetwoboom	