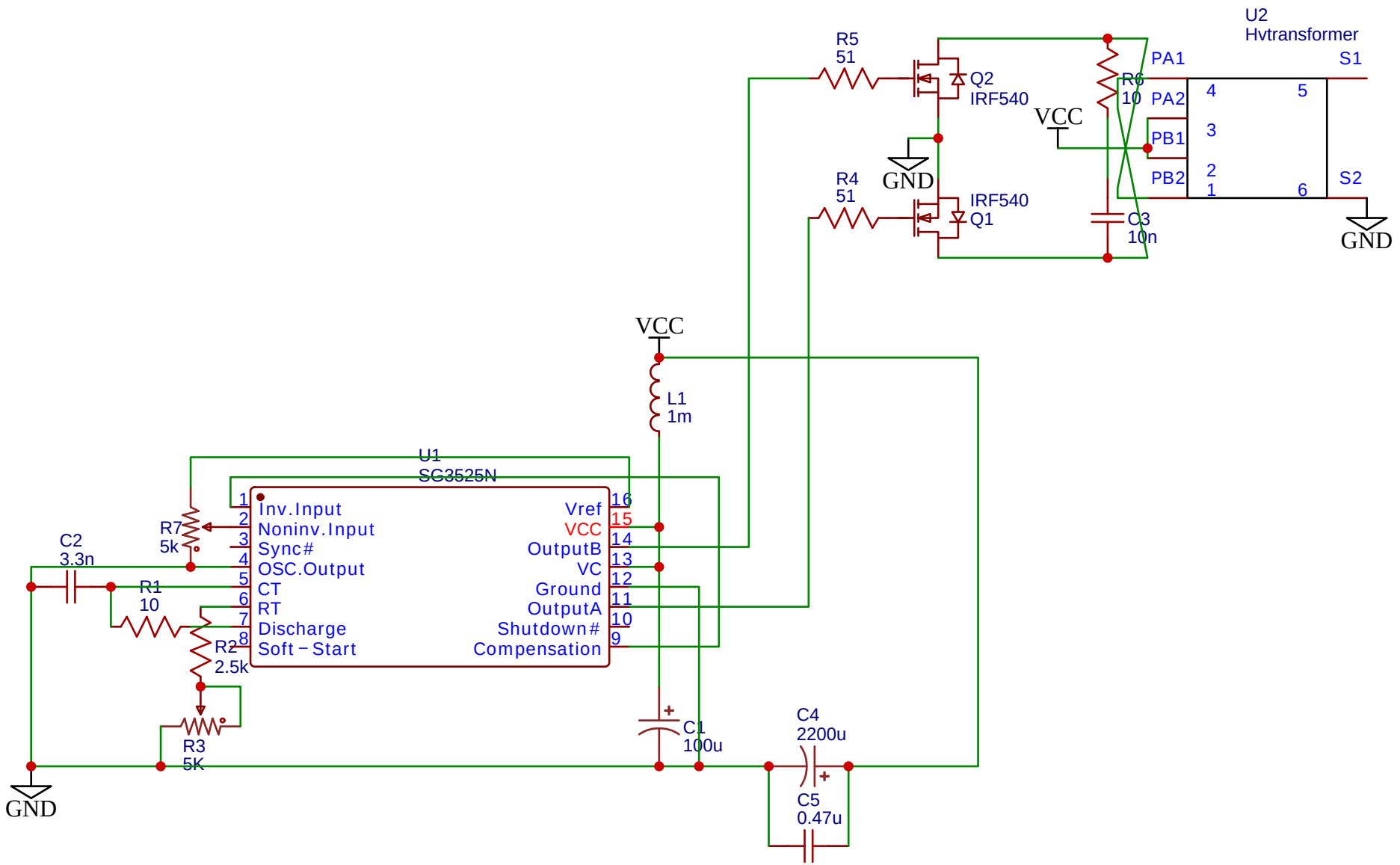

TITLE: HVT-01B Flyback Driver	REV: 1.0
EasyEDA	Company: OP Studios
	Sheet: 1/1
	Date: 2024-10-26 Drawn By: S.T.