516 GEARS OF FIRE

2020 - 21 ENGINEERING PORTFOLIO

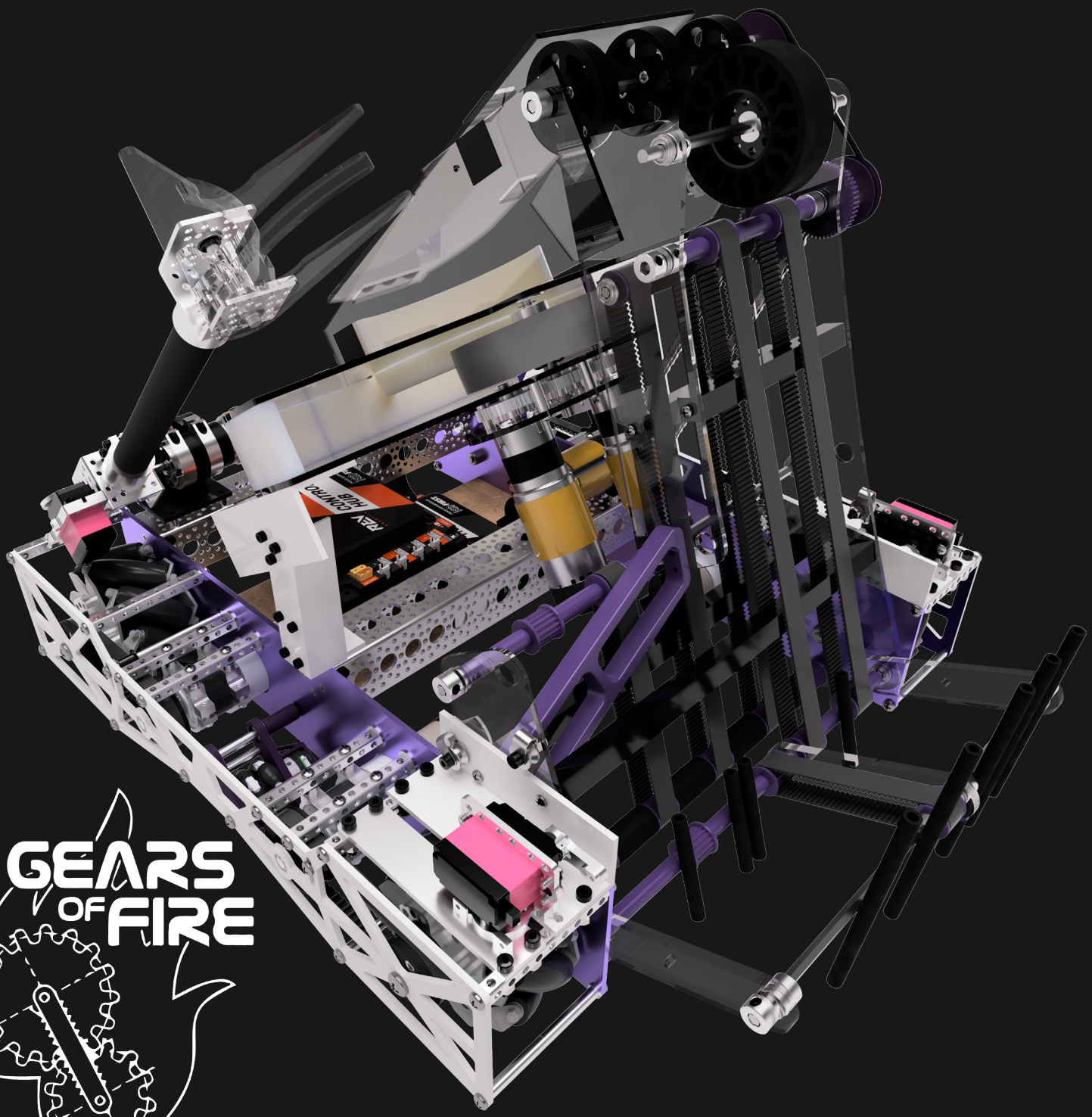

GEARS OF FIRE

516

MEET THE TEAM

Team 516 Gears of Fire was founded in 2007 and is the 2nd oldest team in Florida. Our members are also the President, Vice President, and Treasurer of our school's robotics club, which consists of 5 FTC Teams. This year, due to the COVID-19 pandemic preventing our adult mentors from attending meetings, our Hardware and Software Leads currently mentor 3 other FTC teams and we have restored robotics in our county after our Captain gave a speech at a School Board Meeting. We have 11 members, 5 of them being first year members, resulting in 24 total seasons of FTC experience. Our Mission is to inspire creativity, nurture innovation, and ignite young minds while promoting STEM and the principles of the FIRST organization in the community.

Team picture!

Our Gears to success! (Mentors)

SPONSORS

Alro Steel
Metals • Industrial Supplies • Plastics

ELITE RECREATIONAL FINANCE

REV ROBOTICS

SERVICE ONE MARINE

FIRST

Raytheon

PracticeForces
Strategic Medical Billing Solutions!

TampaBaySteel
Metals Ready for Business

pcs PINELLAS COUNTY SCHOOLS

Rockwell Collins

TAMPA BAY TECHNOLOGY ALLIANCE

SUSTAINABILITY INTRO

Sustainability is a key aspect of any FIRST team. Thus, our team ensures we are able to sustain the club for future generations by growing awareness of FIRST in our local, national, and international community by recruiting new members, fundraising, maintaining a social media presence, and conducting outreach events.

Since our team's members comprised 3/4 of the Club's Board of Directors during the ULTIMATE GOAL offseason, one of our most important club initiatives has been writing a set of Bylaws for the club. The Bylaws outline the structure of our club, detail instructions for holding future elections, and how to run board meetings, ensuring our Club's board may sustain itself in future years.

Another important sustainability iniative is our Open House. Each year, we host an Open House for new members to be introduced to FIRST robotics. This year, our Open House was virtual through Microsoft Teams.

Virtual Open House flyer for the ULTIMATE GOAL season made by our outreach lead, Aabhas.

FINANCES

As a school club, it is essential we maintain our finances. Additionally, each year, we conduct all of our fundraising separate from the school, visiting businesses to obtain new sponsors, creating sponsorship packages, charging dues from members, and winning prizes through challenges. This year, we have reduced a majority of our costs by obtaining new, in-kind sponsors who donate materials like aluminum and polycarbonate. Below is a sumarized budget for this season, only factoring costs from materials we purchased this year.

516 Gears Of Fire ULTIMATE GOAL Balance Sheet

Date	Description	Income	Expense	Balance
08.20.20	SOFIC Challenge prize	$750.00		$750.00
09.22.20	REV Sponsorship	$250.00		$1,000.00
10.4.20	Drivetrain parts order		$265.00	$735.00
10.26.20	Intake v1 parts order		$15.00	$720.00
10.31.20	Club Dues	$650.00		$1,370.00
1.13.21	Harbor Freight Sponsorship	$100.00		$1,470.00
1.18.21	Shooter parts order		$90.00	$1,380.00
2.11.21	Meet 3 Celebration video winner	$50.00		$1,430.00
3.6.21	Intake v4 parts order		$225.00	$1,205.00
3.27.21	MMM Prize Money	$75.00		$1,280.00
4.15.21	Meet 5/6 Celebration video winner	$50.00		**$1,330.00**

RESPONDING TO COVID

Much like every other FTC team this season, we have faced considerable challenges to the day-to-day operations of our club due to the COVID-19 pandemic. However, we have faced and overcome each challenge with Gracious Professionalism and perseverance (and a little bit of public speaking). Below are 4 key ways in which our team has responded to the COVID-19 Pandemic.

School Board Speech - A.K.A Operation Restore Robotics

- 07.16.20 - Realized severity of COVID-19 pandemic meant robotics would be affected in the 2020-21 school year. Sent form asking members what safety procedures should be in place and if they could return.
- 08.16.20 - Emailed school administration with possible safety procedures and guidelines for meeting during school year.
- 08.31.20 - Emailed STEM coordinator and School Board explaining why robotics should continue in a safe, secure manner after school administration rejected requests.
- 09.08.20 - Aabhas gave speech at School Board Meeting about the importance of robotics in the county and guidelines for safe meetings.
- 09.12.20 - ULTIMATE GOAL Game Reveal!
- 9.17.20 - School Board Speech a Success! Quarter 1 Operating Plan made
- 9.27.20 - First physical meetings at school.

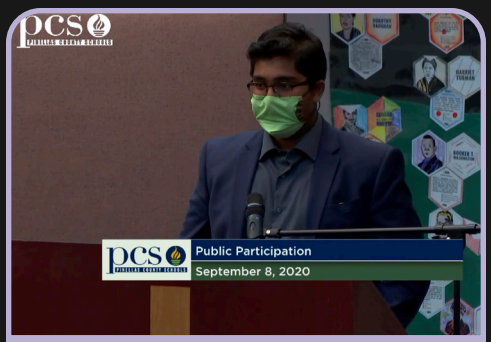

Aabhas speaking at the Pinellas County School Board Meeting. It was a 3 minute speech discussing the benefits of robotics, why robotics cannot be held virtually, and how our club/team would meet in a safe manner ensuring no spread of the virus.

A Guide to Safe Meetings - Presentation & Video

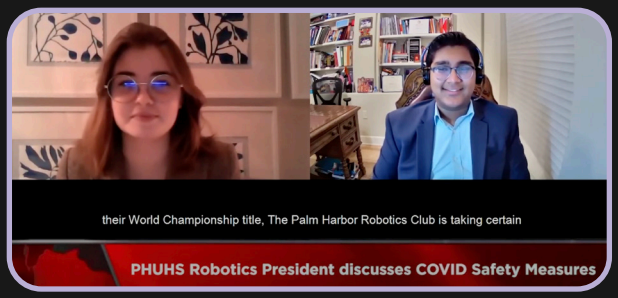

- 9.12.20 - Video - Aabhas and Maddy made short 2 minute 30 second video discussing safety procedures for our team's physical meetings in the ULTIMATE GOAL season
- 11.7.20 - Presentation - Aabhas and Miles gave 1 hour presentation + Q&A at Virtual Robothon discussing how to have safe meetings and the steps we took to ensure we could meet this season.

Sustaining Our Club - Mentoring Teams & Build Streams

- Sustained club through COVID-19 in 2 ways. Mentored 3 out of 4 sister teams and held "Build Streams" to teach our team's freshman virtually.
- Attend meetings for teams 506, 3830, & 3839. 6 hours/week for each team at school with additional meetings at Aabhas' house. Estimated 25 hours/week of mentoring for Aabhas and Miles.
- Aabhas and Miles functioned as traditional, adult mentors for teams, teaching building, software, and CAD principles to members from ground up - simply an amazing experience.
- Our team has started "Build Streams" where Aabhas will stream his building when he is at home working on the robot and members could not attend. Critical for maintaining team's knowledge of robot and teaching members how to build even though they were online.

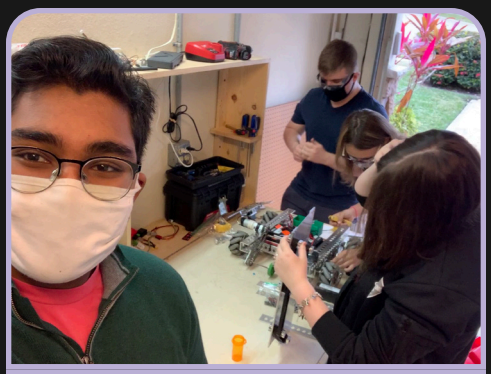

Aabhas working with team 3839 to design an intake. Currently, 3839 is ranked 9th and is adept at all aspects of building, designing, and programming a robot.

OUTREACH INTRO

Over the past 18 months, our team has engaged in thousands of hours of outreach. We recognize that we have improved because of FIRST and the mentorship and sponsorship that we have enjoyed throughout our FTC careers. Not every team has the same experience level nor access to opportunity, so we use outreach as a means of bridging that gap and sustaining the experience that we all are privileged to have each year. Members of our team have appealed to the school board to allow safe robotics meetings during COVID-19, started a robotics program in India, visited tens of schools and organizations throughout our community, mentored 3 other FTC teams and a rookie SOFIC team, offered presentations or interviews and distributed helpful material at competitions, and hosted a recurrent podcast to continually engage other teams. Additionally, we have secured sponsorships industry connections. These experiences have improved our own understanding of the engineering principles FIRST has taught us, and benefitted our local STEM community as well as thousands of students across the globe. This portfolio section describes our four main outreach projects, though we encourage you to explore our outreach events more in our Engineering Notebook.

OUTREACH TIMELINE

September 2019
9.7.19 SKYSTONE Kickoff Presentation

October 2019
10.19.19 Scrimmage Help
10.22.19 Plato Academy demonstratoins
10.26.19 Camp Wai Lani Outreach

December 2019
12.18.19 Visiting Local Businesses
12.30.19 India School Outreach

February 2020
2.7.20 Raytheon Demo
2.8.2020 Glazier Children's Museum
2.11.2020 Synapse Summit

May 2020
5.13.20 FTC Live Game Manual 0 Interview
5.16.20 SSSSS Interview
5.31.20 Recruitment Flyer

June 2020
6.17.20 Largo Zoom Call
6.25.20 FTC Live Viper Bots Interview

July 2020
7.4.20 - 8.2.20 SOFIC Challenge
7.11.20 Planning Virtual Robotics Classes

August 2020
Learn with Us Classes - Month long

September 2020
9.7.20 ROBOTICON Presentation
9.8.20 School Board Hearing
9.9.20 Largo Q&A Session
9.19.20 Don't Blink Interview

November 2020
11.7.20 Roboticon Virtual Presentation

February 2021
02.17.20 Girl Scout Demo

Note: some events have been omitted for readability. A full list may be found in our Engineering Notebook

INDIAN SCHOOL OUTREACH

- Started when we visited high school in Jaipur, India in ROVER RUCKUS.
- Went for 10 days for 8 hours/day in SKYSTONE to teach CAD by designing a drone, programming through basic arduino robot we designed, and building with simple projects like small car kits.
- Have been unable to visit in ULTIMATE GOAL due to COVID-19. Robotics is currently closed at school.

Students at Adarsh Vidhya Mandir assembling arduino robot we designed. The blue tape is the track the robot was to follow using a color sensor on its bottom.

Aabhas speaking to all the students of the school. His speech was about the principles of FIRST and what the robotics club and him had been doing for the past 10 days at the school.

Aabhas and students CADing Tetrix motor hubs to learn the basics of Fusion360. This included sketches, extrusions, threading, and tangent planes. This is the typical excercise we use to teach our members CAD

Aabhas and the students going over the output from a color sensor. The students learned Java and C to understand both FTC and Arduino programming

SOFIC ROBOT CHALLENGE

Team posing with judges after awards ceremony. We received $1500 in prize money and split it with Largo Robotics. Money was used to fund robot components.

- Robotics club we started at other school decided to enroll in a robotics challenge by USSOCOM.
- Challenge was rookie team's first robot - ended up winning 4th place in state - $1500 cash prize.
- Objective was to pick up coffee mugs from tray and deliver to a person. Additional points given for theatrics and audio.
- Aabhas became primary mentor for team after traditional mentor had to quarantine - first full mentoring experience.

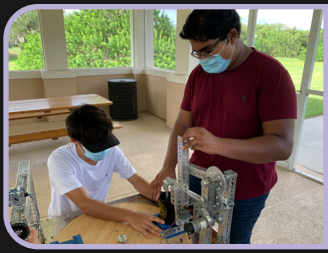

Aabhas teaching members principle of a 4 bar design. The lift was used to hand the coffee mug to a spectator. Actobotics components were used as the team bought an actobotics competition kit from funding.

CONNECTING WITH THE COMMUNITY

- Expanded STEM at many community events including booths at 3rd Friday in Safety Harbor, FL.
- Presentations at entrepreneurship conferences in front of 200 entrepreneurs at TiECON Florida and held a booth at Synapse Summit 2020.
- Demonstrations at the Children's Glazier Museum, MOSI, and sponsors' facilities.
- Technical presentations at FIRST events including FTC SKYSTONE & ULTIMATE GOALKickoff and ROBOTICON Tampa Bay twice.

2.11.20 - Aabhas & Asif discussing PHUHS robotics with atendees at the Synapse Summit

ENGAGING WITH THE EDUCATION SYSTEM

- Demonstrated robots to the vast majority of charter schools in Pinellas County and many public elementary and middle schools. (10+)
- Assisting the Girl Scouts of West Central Florida with STEM day and in earning their badges.
- Starting a robotics team at Largo High School.
- Planned and implemented a summer robotics program to ease the transition for FIRST LEGO League Students to FIRST Tech Challenge. (1 month)
- Speech to School Board which restored robotics in our county for 10 teams.

2.17.21 - Aabhas & Raymond discussing the Engineering Design Process with Daisies

INTERVIEWS & FIRST UPDATES NOW SHOWS

- Aabhas and Miles have been interviewed 5 times about robot design, software, and awards.
- Aabhas has been co-host of FIRST UPDATES NOW shows since late RELIC RECOVERY.
- Hosts shows ~1x a month interviewing teams, game vendors, FTC officials, and doing robot recaps.
- ~70 - 100 concurrent live viewers. 100s - 1000s of views after shows are uploaded on YouTube.
- Aabhas has hosted 10+ shows in ULTIMATE GOAL and SKYSTONE.

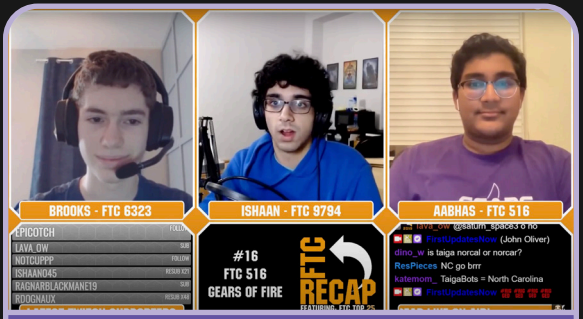

Aabhas on FTC Top 25 February Show. Currently has 600+ views on Youtube and our team was rankned 16th in the world for this show!

GAME STRATEGY

General Strategy: Our overarching goal was to build a competitive robot that would win the FIRST Championship. We knew that the key to do so would be efficient cycle times and consistent shooting. Additionally, from our experience in the past 3 challenges, we knew that robots that never turned 180º were the most efficient; thus, for ULTIMATE GOAL, we decided on a same-side design where rings would be collected and scored from the front of our robot.

Autonomous Strategy

- "Do it all" autonomous
- A,B,C - Powershots (45)
- A,B,C - 2 Wobble Goals (30)
- A,B,C - Park (5)
- A,B - Bounceback (12 or 24)
- B,C - Starter stack (12, 36)

104 - Zone A
116 - Zone B
116 - Zone C

Driver-Controlled Strategy

- Minimize travel distance by stopping rolling rings
- shoot in front of return rack
- Can collect rolling, flat, stacked, and bunched rings using adjustable "Droptake"

30 rings average

End Game Strategy

- Complete End Game
- 1 high goal cycle if possible
- 2 Wobble Goals in Drop Zone (40)
- 3 Powershots (45)
- Automated Powershots

85 - End Game
321 - High Score
399 - Goal

ENGINEERING DESIGN PROCESS

In *ULTIMATE GOAL,* 516 has followed a 7-step engineering design process to a tee in every aspect of the robot. As a result, we have an incredbily reliable, robust, and innovative robot that maintains principles of functionality and aesthetic in every component. Every final system of the robot has been entirely designed in CAD before fabrication this year, resulting in a compact, light design.

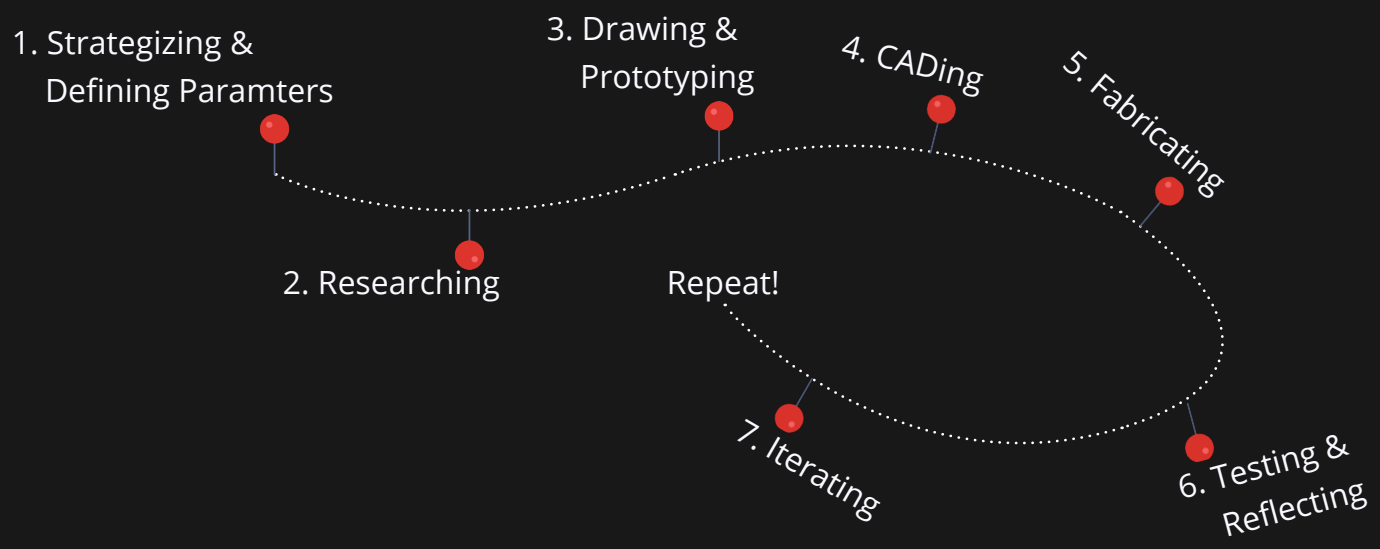

ROBOT OVERVIEW

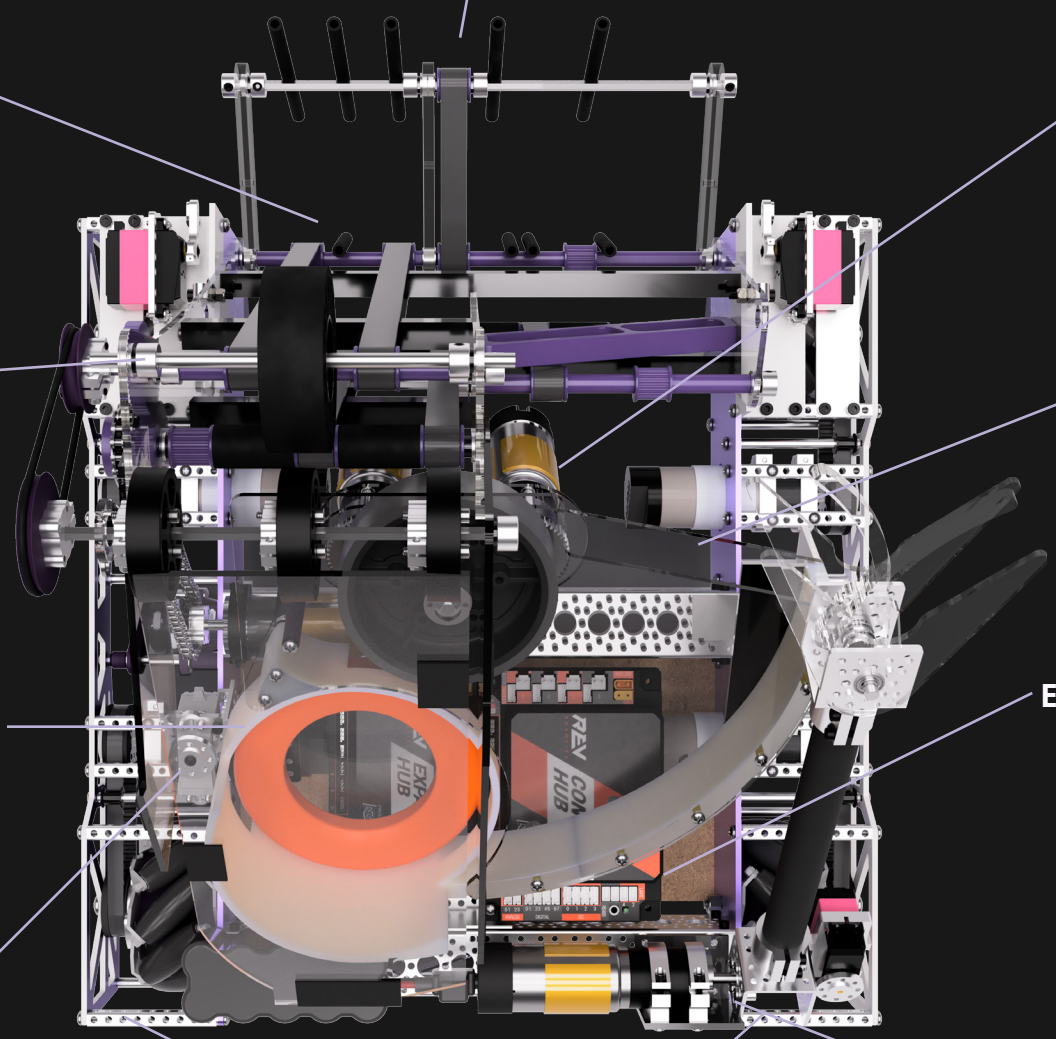

DESIGN TIMELINE

SCRIMMAGE: drivetrain v1

MEET 1: drivetrain v1, **intake v2, shooter v1, wobble v1**

MEET 2: drivetrain v1, **intake v3.0, shooter v2.0, wobble v2**

MEET 3: drivetrain v1, **intake v3.1,** shooter v2.0, **wobble v3**

MEET 4: **drivetrain v2, intake v3.2,** shooter v2.0, wobble v3

MEET 5: drivetrain v2, **intake v4.0, shooter v2.1,** wobble v3

MEET 6: drivetrain v2, **intake v4.1,** shooter v2.1, wobble v3

LEAGUE CHAMPIONSHIP: drivetrain v2, **intake v4.2?,** shooter v2.1, wobble v3

DRIVETRAIN

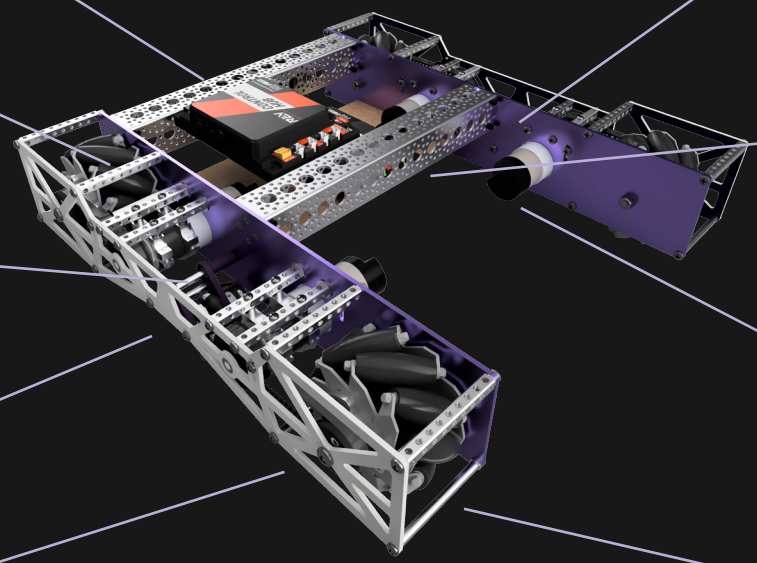

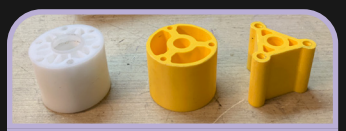

Mecanum core iterations

Dissassembled mecanum components

Innovative Features

- 16:1 drive ratio using 3D printed pulleys. with 7.01 ft/s theoretical free speed
- Sunken drive motors to support motor shaft.
- HTD 5 belt drive for efficiency and quietness.
- 60% of weight eliminated on outside plates with pocketing. No loss in structural integrity.
- Dead-axled wheels for increased robustness
- 220 grams saved using custom mecanum core.
- Custom odometry pods for complete integration
- Convienent mounting points with square beam and actobotics channel.

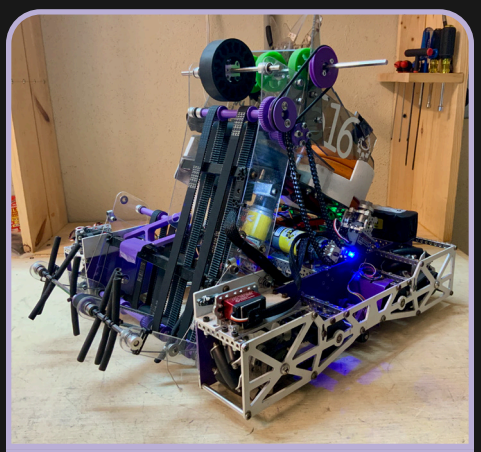

Final drivetrain - First custom machined drivetrain in 14 years

DRIVETRAIN ENGINEERING DESIGN PROCESS

STRATEGIZING:
Decided on light, robust, maneuverable, fast drivetrain

RESEARCHING:
Chose plate material, wheel type, power transfer method, and ratio

PROTOTYPING:
Mostly done over offseason. tested custom mecanum core

CADING:
General plate –> wheel –> motor –> odometry pod –> standoffs –> pocketing

FABRICATING
Sideplates cut by sponsor 1st build stream for team

TESTING
Enough strength, not fast enough, odometry pod flipped up, not painted properly

ITERATING
New, 16:1 ratio, odometry stopper added, repainted plates

CONCLUSIONS:
Very reliable - never failed in match. one of the fastest drivetrains this season - 7 ft/s

INTAKE/TRANSFER

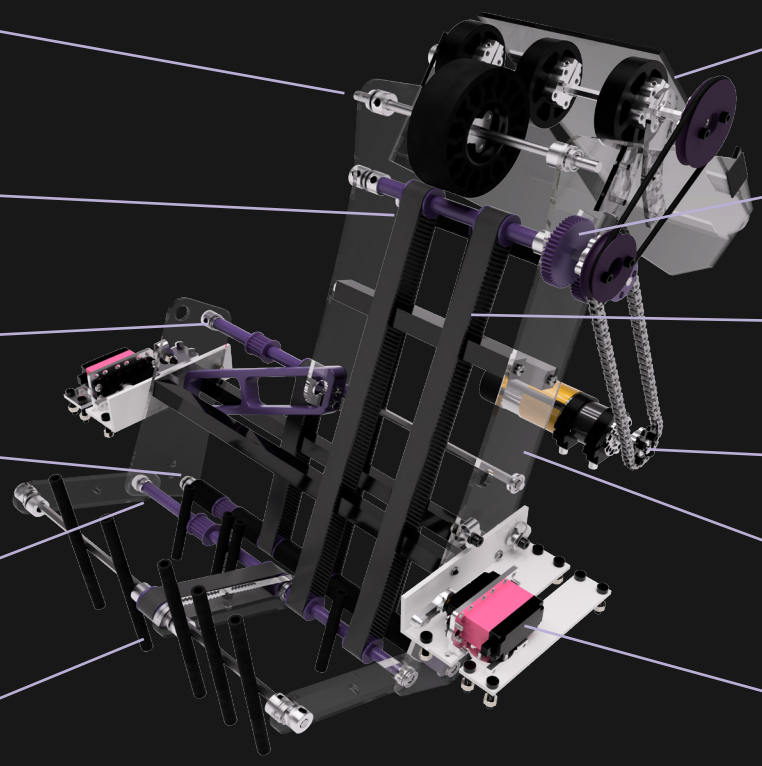

38 3D printed parts for intake/transfer

First droptake test

Innovative Features

- Most iterated feature - 4 major, 10 minor iterations.
- Active, powered "Droptake" to intake stacks, rolling rings, rings in corner, and collect rings while strafing. Uses torsion springs and maintains elasticity by pulling with string.
- HTD 3 timing belt transfers power in system & transfers ring to shooter.
- Reverse spinning bottom roller for quick collection.
- 5mm hex axles used, elminating need for hubs
- 4 power transfer methods for efficient torque splitting- chain, gears, timing & round belt.

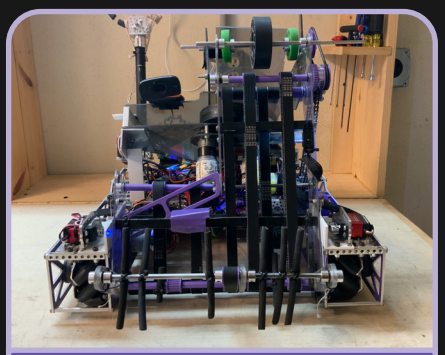

Final intake. Features include active droptake, passive clasp to start in 18x18x18, 11" width to intake 2 rings at once, and 1150 rpm speed

INTAKE/TRANSFER ENGINEERING DESIGN PROCESS

STRATEGIZING:
Decided on same-side intake, combined intake & transfer

RESEARCHING:
Chose intake type & roller material - chose vertical intake with surgical tubing

PROTOTYPING:
prototyped 3 versions before final intake. also tested bottom roller

CADING:
greatest CAD achievment of build team - every part in CAD, redesign from ground up

FABRICATING
Hand cut lexan side plates, support removed from 16 pulleys.

TESTING
Needed active Droptake. Torque not splitting properly. Too much friction

ITERATING
Powered Droptake. Split torque more evenly. Removed unecessary belts

CONCLUSIONS:
Very good at intaking rolling, stacked, and bunched rings. Some problems with funnelling

SHOOTER

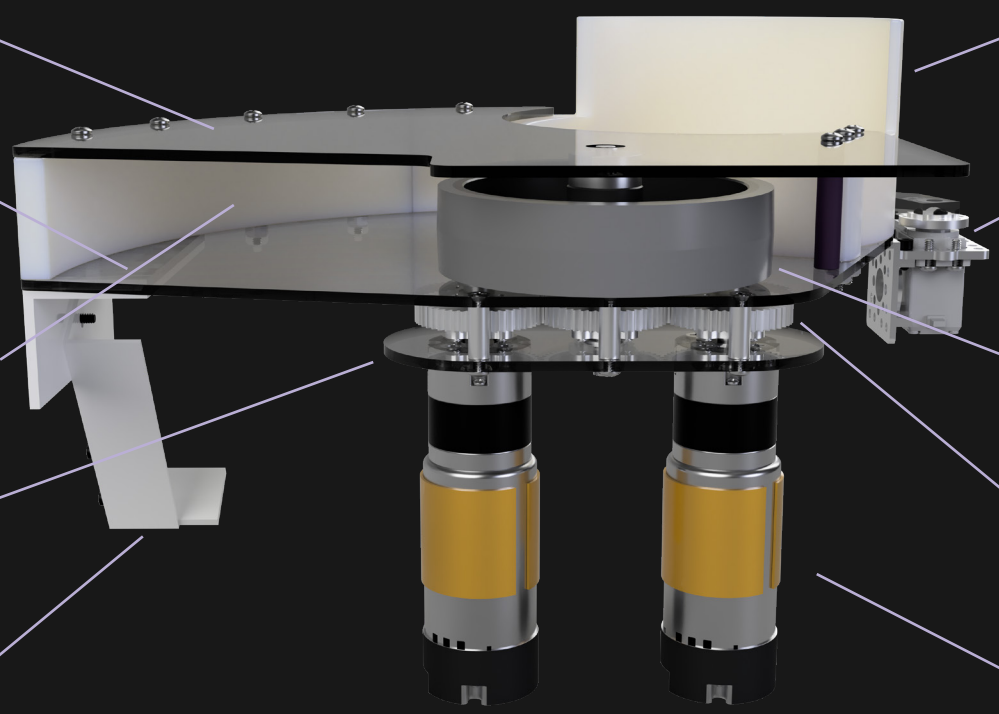

Shooter gearbox. Flywheel is linked to 2 motors using 1.5" gears. Super Lube was applied for efficiency and reduced noise.

Innovative Features

- Custom, 2-motor gearbox
- 4" flywheel, launch rings at 16.2 m/s
- 3D printed, 90° J curve for sufficient acceleration while remaining compact.
- Lexan enclosure ensuring complete visibility throughout the match.
- Shooter motor shaft supported at end for stability.
- goBILDA Super Speed Servo used for indexing, resulting in < 0.4s shot time for all 3 rings
- 3D printed magazine & shooter curve for seamless integration, ensuring smooth path for ring.

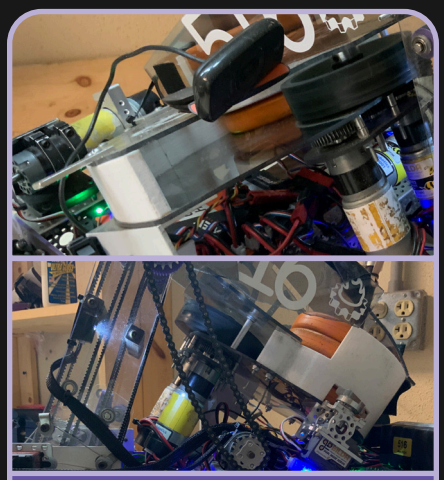

Final shooter - accurate & precise

SHOOTER ENGINEERING DESIGN PROCESS

STRATEGIZING:
Decided between straight, 90°, and 180° shooter. Need to follow RG08.

RESEARCHING:
Chose shooter design, 1 vs. 2 motor gearbox, ball park shot height and angle

PROTOTYPING:
Tested various shooter designs and compressions. Realized 90° is best

CADING:
Shooter v2 = complete redesign. Decided to countersink gears and layout of gearbox.

FABRICATING
Printed shooter curve and magazine, hand machine plates. Assembled all day of Meet 2.

TESTING
Not much improvement required, testing = successful. Needed faster indexer

ITERATING
COTS Actobotics mounting to custom. Added goBILA Super Speed Servo.

CONCLUSIONS:
Very little spread in shot. If we redesign, reduce compression - 10mm –> 6mm

WOBBLE GOAL MECHANISM

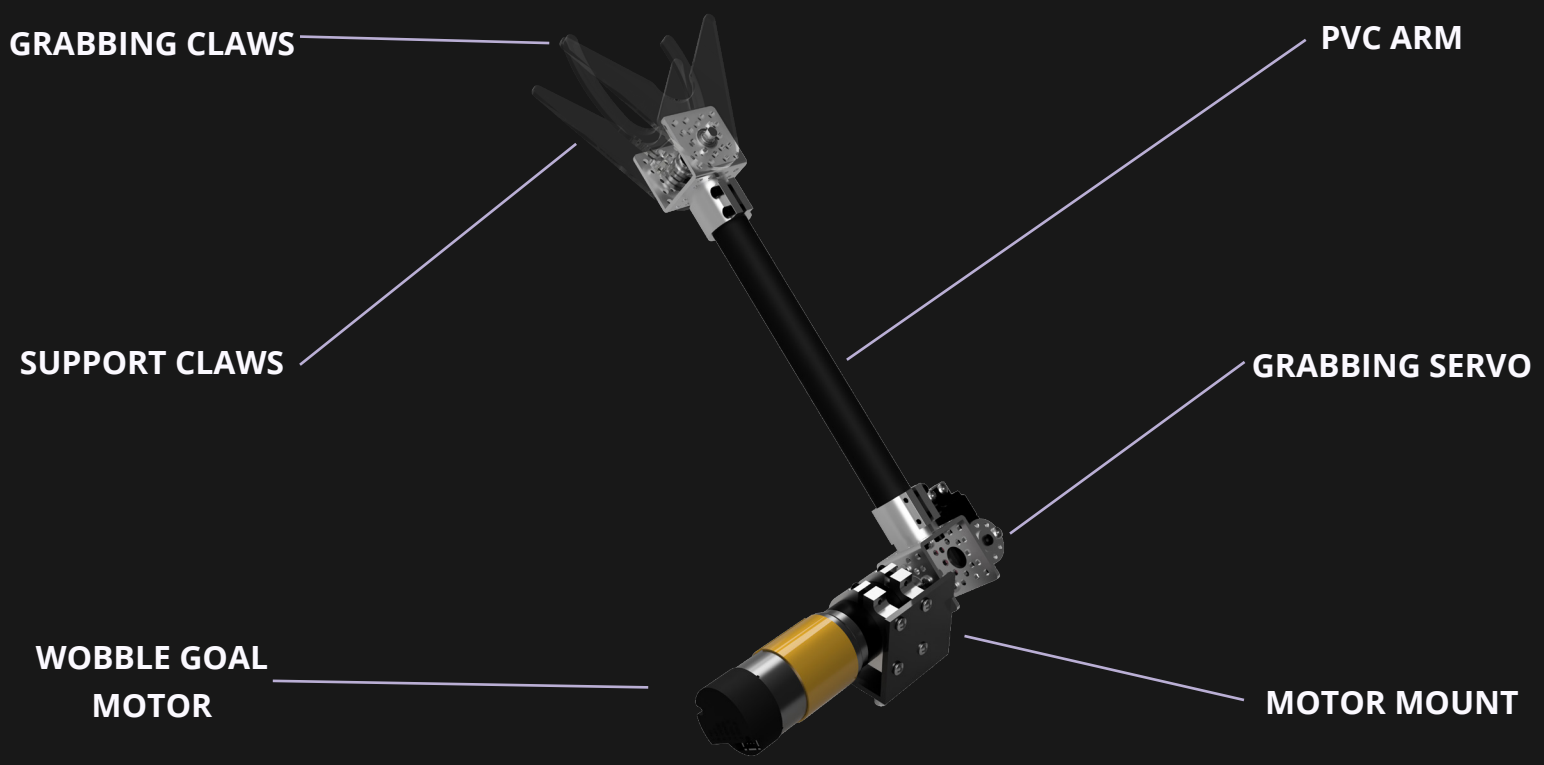

Innovative Features

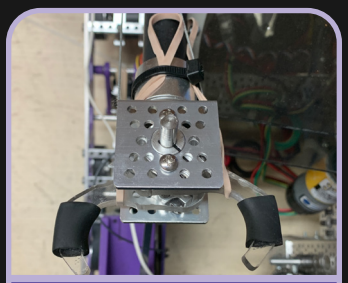

Wobble Goal v2 - T-Rex claws with minimal margin of error.

- Taught new build members design & build principles as mechanism is not complex.
- 3 versions - 1st version was prototype, 2nd had T-Rex claws, not built, 3rd is current.
- Low pivot point, allows us to easily right tipped over wobble goals.
- Servo is located inside robot reducing torque and protecting it, transfers motion to claws at the end of mechanism using string linkage mechanism.
- Arm extends 9" outside of robot to reduce autonomous motion.

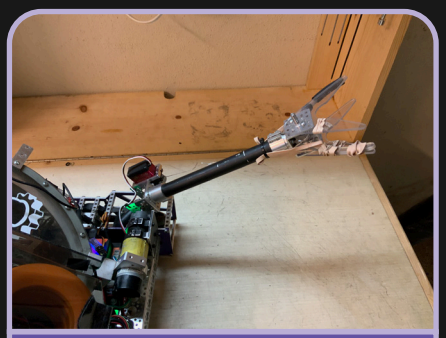

Final Wobble Goal Mechanism - rubber bands and surgical tubing have been added for increased friction when scoring Wobble Goal

WOBBLE MECH. ENGINEERING DESIGN PROCESS

STRATEGIZING:
Decided where to grab wobble goal from - head, stem, or base

PROTOTYPING:
Tested grabbing from the head and the stem. Did not try grabbing from base

FABRICATING
Hand cut wobble goal claws - 1/4" polycarbonate. used 0.84" - PVC for arm - robust and light.

ITERATING
Tightened string to servo bolt, washer, and threaded hole. Added rubber bands.

RESEARCHING:
Looked at past claw designs like SKYSTONE to learn important aspects

CADING:
First iteration was not CADed. Second and Third were entirely CADed to make claws.

TESTING
Needed better method of stringing claws, also not enough friction on claws.

CONCLUSIONS:
Tight and consistent grip on wobble goal. May change to turret for Florida States.

PATH GENERATION

To start autonomous, we must generate a path that travels between targets to achieve scoring objectives. The simplest way would be moving linearly between them, but that would make obstacle avoidance difficult. Early this season, we designed a hypothetical autonomous that had to avert a round obstacle, and tried to find the shortest path. However, we remained uncertain, and began looking into path-generation algorithms used in industry robotics.

We decided to create an "A*" (A-Star) implementation that divides the field into millions of cells. To avoid obstacles, we remove cells from the map. At first, we recursively travelled from the start to all bordering cells until we found a path. But diagonals were exclusively favored and the runtime too high, so we revised it to only look at one neighboring cell where the sum of the distance travelled and distance remaining was lowest. That structure was tail-recursion, so amid overflow crashes, we optimized it by converting to Kotlin, which has tail-recursion handling. Thus, we always have the most efficient path that avoids obstacles.

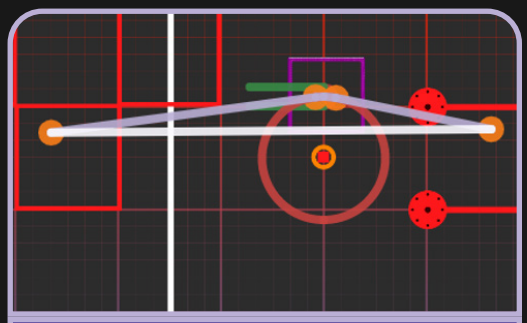

One of the proposed paths; the white line was the intended path, but the red cirle represented an obstacle. In this picture, we avoid it traveling exclusively along tangents to the circle and arcing along the circle between the tangents.

PATH FOLLOWING

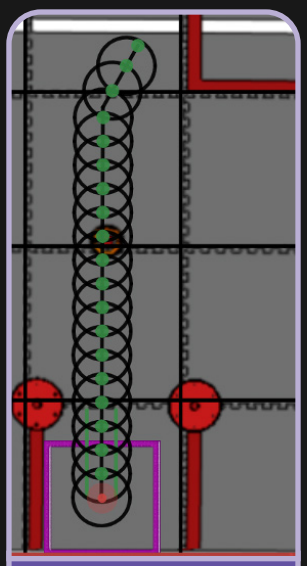

An example of how Pure Pursuit selects "sub-targets" along part of our path

Following a path composed of so many points is fairly complex, since maneuvering to reach so many closely clustered points would sacrifice the speed that we need. Instead, we select certain targets from our path that guide us and create a smoothening effect (especially necessary since A* always moves at multiples of 45° and would not create other perfect lines without some smoothening).

The algorithm we use, a modification of aerial "Pure Pursuit", draws a circle around our robot and finds the nearest intersection ahead of us on our path. The robot faces the subtarget (though we sometimes choose to disable that steering) while moving towards it until a separate algorithm finds that we have passed the subtarget along our path's perpendicular. Our robot hence follows our path closely enough to allow us control, but roughly enough that we do not lose significant speed. For the last point along the path, our odometry allows us to correct, ending the motion accurately to complete a scoring objective. This path-following algorithm has proven to be an extremely effective way of completing autonomous motions, and is the main reason that we are able to complete our full, high-scoring autonomous path in the allotted time.

ROBOT LOCALIZATION

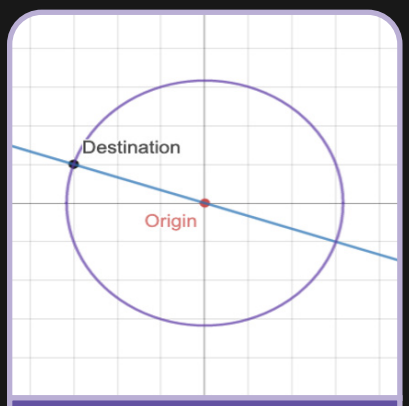

A graphical model of our odometry math. The exact intersection indicates that the process described would approximately result in our robot's new position.

Our odometry system localizes our robot with encoder-enabled spring-loaded deadwheels aligned with coordinate axes. After many failures, we found that by taking our total displacement by square rooting the sum of the squares of encoder deltas, we could find an arc length that could be converted to a chord length by $l=2r\sin(\theta/2)$. We set that length to a circle radius and found its intersection with the line of slope $\theta + \tan^{-1}(\Delta y, \Delta x)$ to get our absolute field position. We encourage you to look at our notebook for a more detailed derivation.

One issue right now is drift caused by inaccuracies in the gyro that tells us θ. Replacing it did not help, so we tried adding a third, parallel odometry wheel we believd could reveal θ; the difference in parallel encoder readings divided by ticks per rotation should tell us how many times we have rotated. However, despite moving the third wheel repeatedly to come as close to theoretical perfection as possible, we never managed to eliminate angular drift. Instead, we added a reset button so our drivers could correct our odometry in TeleOp. While we hope to improve it more, our odometry module allows a consistent, self-correcting autonomous and many important TeleOp automations.

RING LOCALIZATION

Computer vision to detect rings in a camera frame is integral to this year's challenge. Using an external camera to feed data to a custom OpenCv pipeline, we find orange clusters whose height reveals starter stack size, and whose area, when fitted to an ellipse, correlates with the real distance that, provided a movement angle, we can travel to collect it.

We ran power regression—cluster size empirically decreases faster at further distances—to find the power curve $d=1369.5873x^{-0.41436702}$ to reveal that distance with a correlation coefficient over 0.99. We initially theorized that the line along which the ring lay could tell us the necessary angle, but testing disproved that; instead, we discovered that the sideways and vertical offsets would, so we could find the angle to a ring by $\tan^{-1}(\Delta y+480, \Delta x+320)$, 480 and 320 being the necessary offsets based on screen size. After tuning an offset based on our camera's rotation and intersecting the line that formed with the circle based on the distance found earlier, we were able to localize rings within a few inches, allowing us to achieve multiple scoring objectives with the same ring, one of the most unique features of our autonomous.

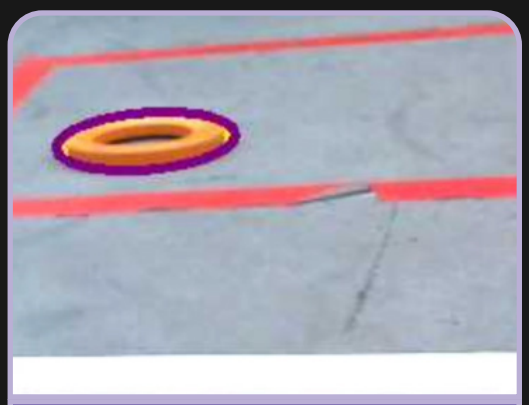

Our robot detecting a ring and fitting it to an ellipse for localization - an action unique to less than 5 teams in the world this season.

PID CONTROL

Because the main scoring objective in this year's game is to accurately shoot rings, shooter velocity control is essential. Sending raw power to our shooter would produce battery-dependent results, so we instead decided on a custom PID controller (the built-in one did not work for dual-motor systems).

The general idea behind PID, the industry-standard error correction algorithm that we use for shooting and motion control, generally relies on three principles:

- Further from the target, more output is needed, so multiply remaining error by a constant
- If output is too small to move a system, more is needed, so accumulate *Δerror x Δtime* to cause that
- Accelerating too quickly leads to overshoot, so the system must resist acceleration - *Δerror x Δtime*

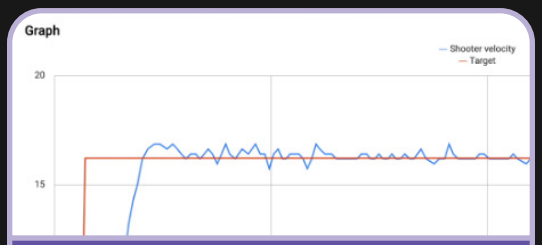

A graph of our shooter PID output, demonstrating its stability. Oscillations are less than 0.1 m/s

Those terms are multiplied by tuned constants (tuned with the Zieger-Nichols Method detailed in our notebook) and summed for output, leading to the final formula $o(E) = K_P E + K_I \int E dt + K_D \frac{dE}{dt}$. WOur effective PID control makes us one of the fastest, most consistent shooting teams in Florida.

DRIVER-CONTROLLED AUTOMATIONS

Our robot shooting rings at an ideal velocity after automatically turning to a calculated angle - 2 unique automations within seconds of each other

One of the ways we maximize TeleOp scoring is automating complex, difficult tasks. For example, we completely automated the endgame powershot task to ensure consistent performance despite the difficulty to drivers of accurately and quickly aligning correctly. We also applied a custom PID controller, detailed more in our notebook, to regulate shooter velocity and automatically shoot at the proper time, turn to 90º, or turn towards the tower goal, favoring edges when at extreme angles to ensure an optimal shot angle.

The main challenge with our automations is odometry drift, since many of them rely on accurate localization. Thus, we allow the drivers to reset from a known point during TeleOp to continue using automations. Another issue is communication between subsystems; for example, when our intake's distance sensor finds three rings, it must somehow tell the separate Shooter class to automatically rev up. To enable that communication, each subsystem reads and writes data to a Dictionary within an accessible singleton class. These control techniques have proven highly effective, helping us become one of the state's highest-scoring teams in both autonomous and TeleOp.