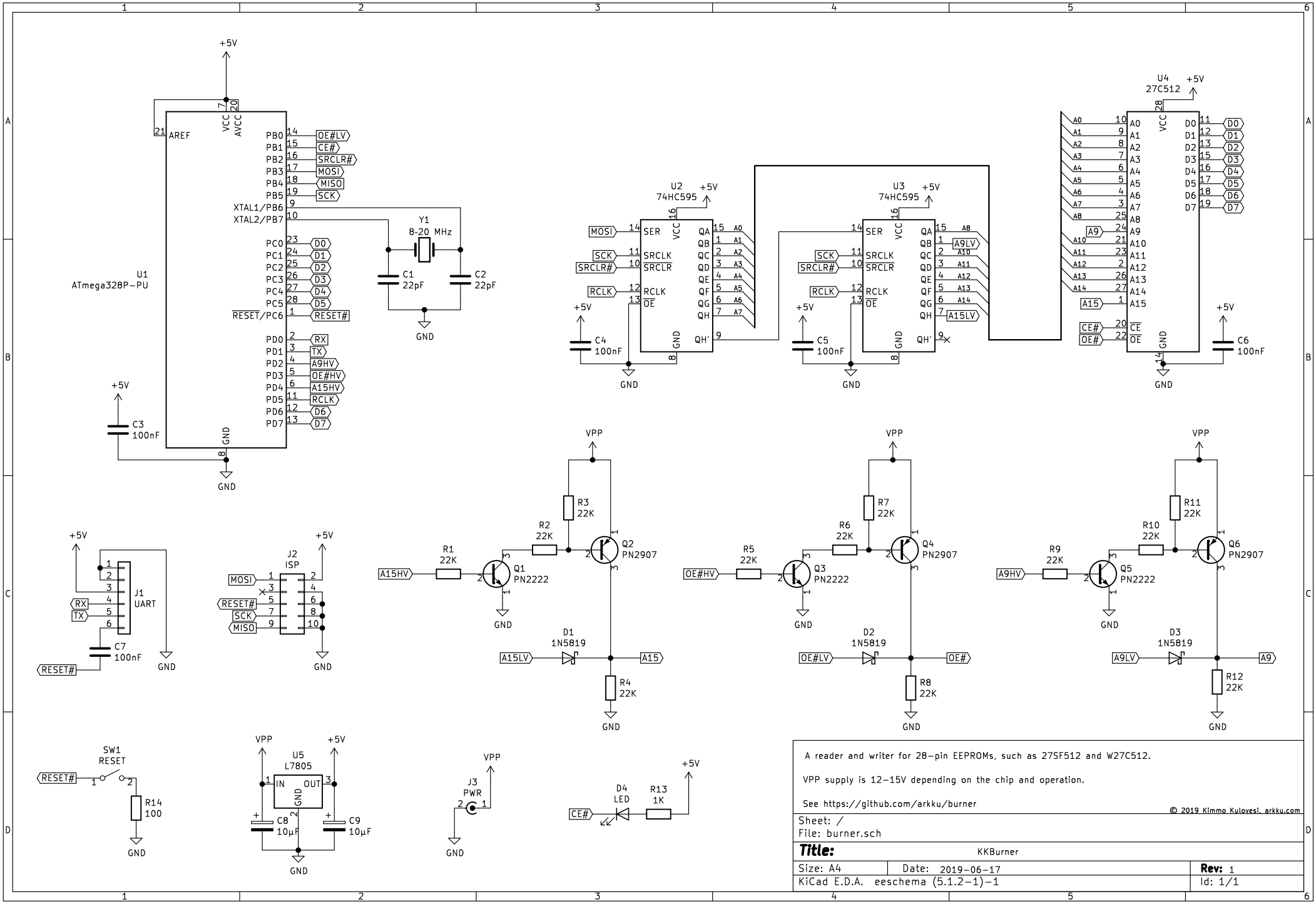

A reader and writer for 28-pin EEPROMs, such as 27SF512 and W27C512.

VPP supply is 12-15V depending on the chip and operation.

See https://github.com/arkku/burner

© 2019 Kimmo Kulovesi, arkku.com

Sheet: /
File: burner.sch

Title: KKBurner

Size: A4	Date: 2019-06-17	**Rev:** 1
KiCad E.D.A. eeschema (5.1.2-1)-1		Id: 1/1