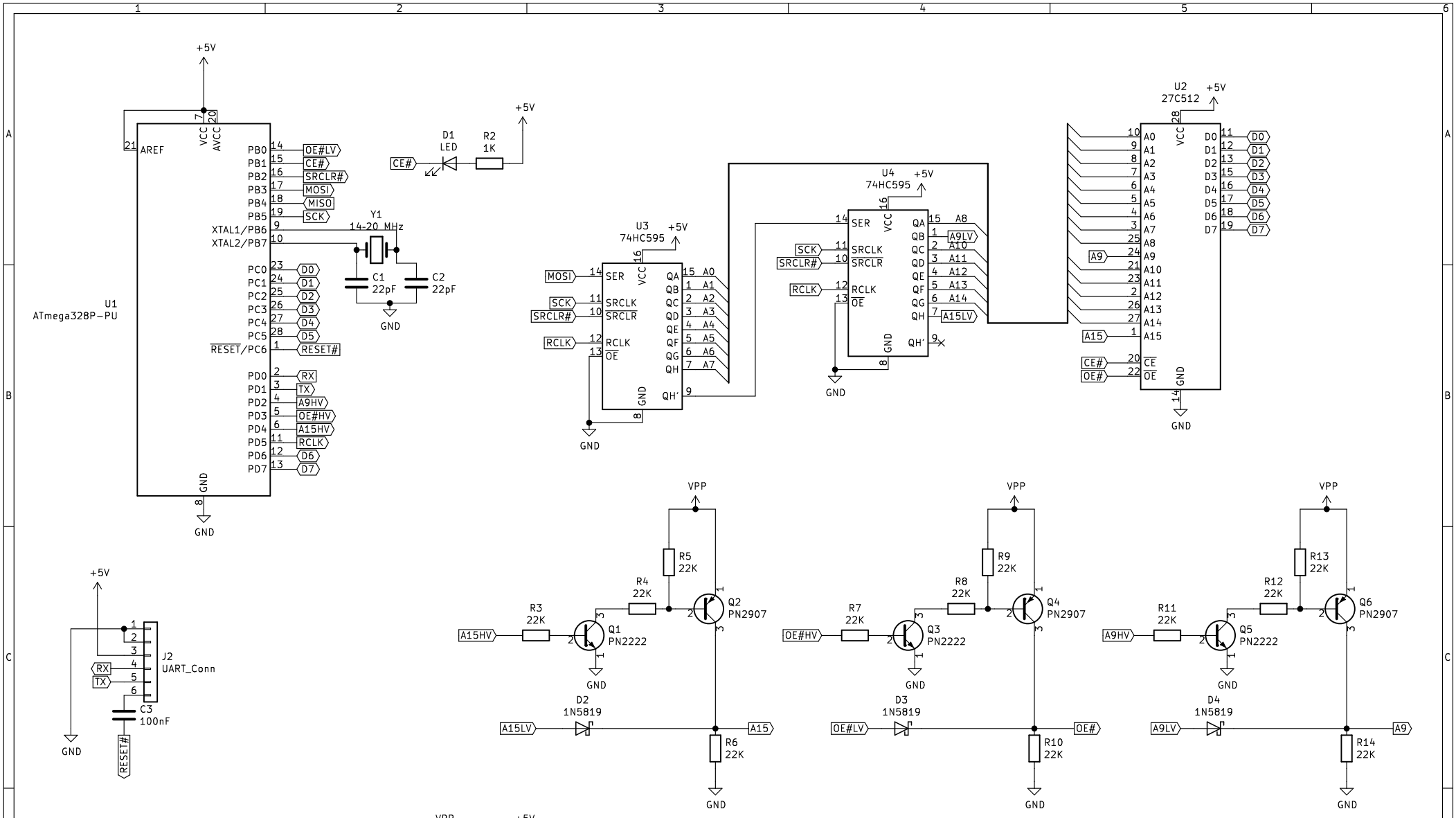

A reader and writer for 28-pin EEPROMs, such as 27SF512 and W27C512.

VPP supply is 12-15V depending on the chip and operation.

See https://github.com/arkku/burner

Sheet: /		
File: Burner.sch		
Title:	KKBurner	
Size: A4	Date: 2019-06-16	**Rev:** 1
KiCad E.D.A. kicad (5.1.2-1)-1		Id: 1/1