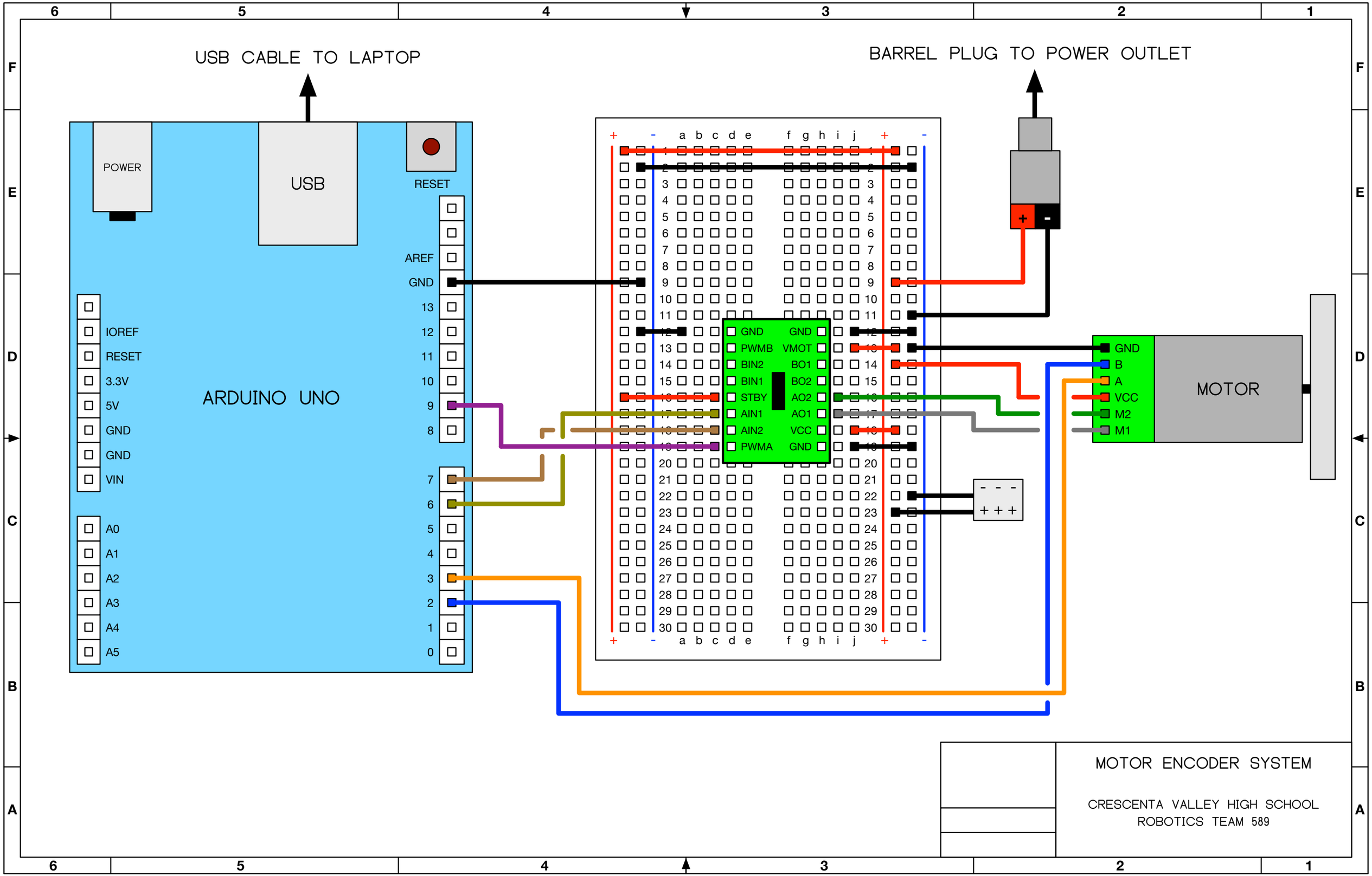
USB CABLE TO LAPTOP
BARREL PLUG TO POWER OUTLET
POWER
USB
RESET
AREF
GND
13
12
11
10
9
8
7
6
5
4
3
2
1
0
IOREF
RESET
3.3V
5V
GND
GND
VIN
A0
A1
A2
A3
A4
A5
ARDUINO UNO
GND
PWMB
BIN2
BIN1
STBY
AIN1
AIN2
PWMA
GND
VMOT
BO1
BO2
AO2
AO1
VCC
GND
GND
B
A
VCC
M2
M1
MOTOR
MOTOR ENCODER SYSTEM
CRESCENTA VALLEY HIGH SCHOOL
ROBOTICS TEAM 589