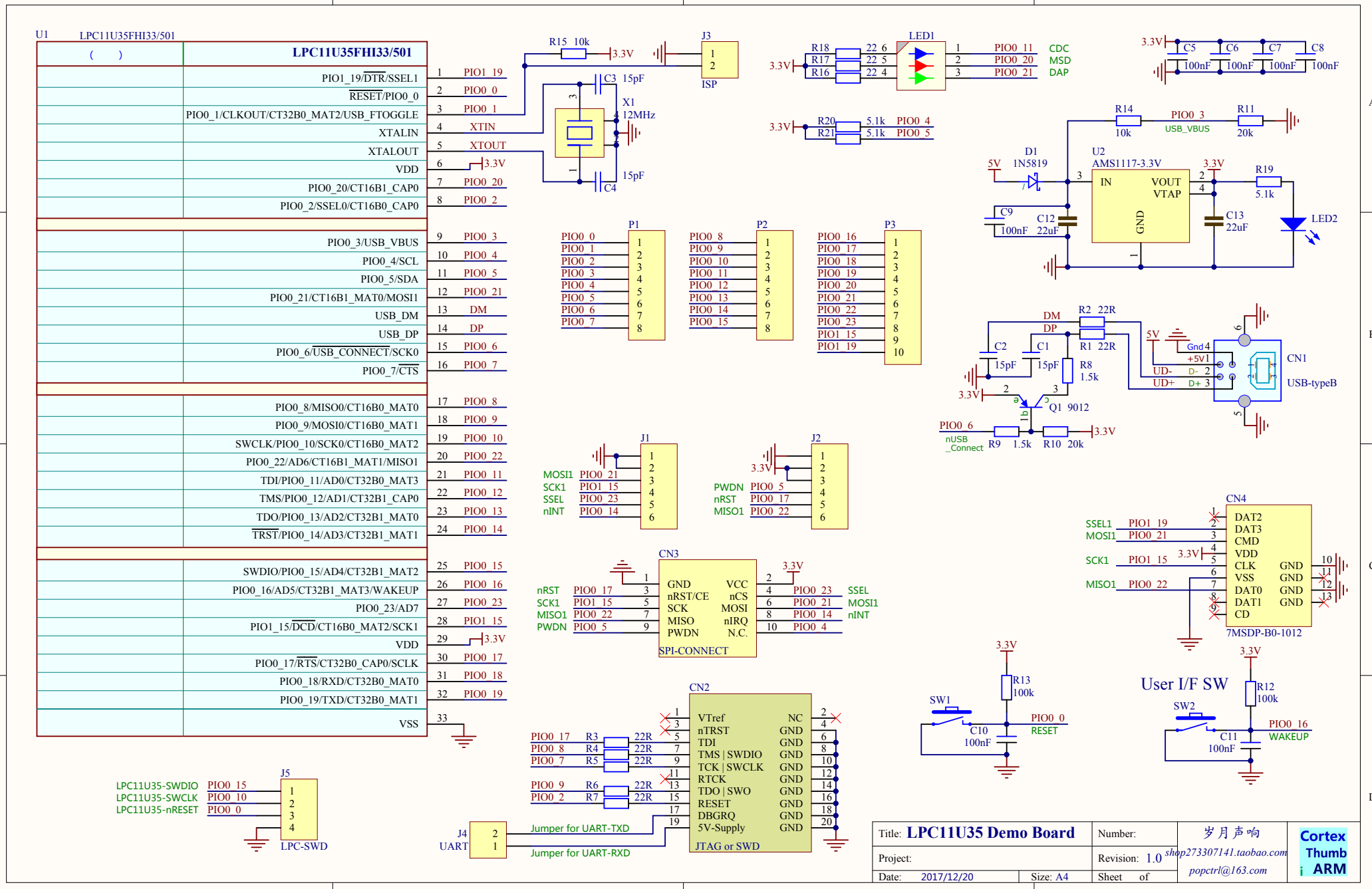
U1
LPC11U35FHI33/501
LPC11U35FHI33/501
PIO1_19/DTR/SSEL1
RESET/PIO0_0
PIO0_1/CLKOUT/CT32B0_MAT2/USB_FTOGGLE
XTALIN
XTALOUT
VDD
PIO0_20/CT16B1_CAP0
PIO0_2/SSEL0/CT16B0_CAP0
PIO0_3/USB_VBUS
PIO0_4/SCL
PIO0_5/SDA
PIO0_21/CT16B1_MAT0/MOSI1
USB_DM
USB_DP
PIO0_6/USB_CONNECT/SCK0
PIO0_7/CTS
PIO0_8/MISO0/CT16B0_MAT0
PIO0_9/MOSI0/CT16B0_MAT1
SWCLK/PIO0_10/SCK0/CT16B0_MAT2
PIO0_22/AD6/CT16B1_MAT1/MISO1
TDI/PIO0_11/AD0/CT32B0_MAT3
TMS/PIO0_12/AD1/CT32B1_CAP0
TDO/PIO0_13/AD2/CT32B1_MAT0
TRST/PIO0_14/AD3/CT32B1_MAT1
SWDIO/PIO0_15/AD4/CT32B1_MAT2
PIO0_16/AD5/CT32B1_MAT3/WAKEUP
PIO0_23/AD7
PIO1_15/DCD/CT16B0_MAT2/SCK1
VDD
PIO0_17/RTS/CT32B0_CAP0/SCLK
PIO0_18/RXD/CT32B0_MAT0
PIO0_19/TXD/CT32B0_MAT1
VSS
R15 10k
3.3V
J3
ISP
C3 15pF
X1
12MHz
C4 15pF
R18 22 6
R17 22 5
R16 22 4
LED1
PIO0_11 CDC
PIO0_20 MSD
PIO0_21 DAP
R20 5.1k PIO0_4
R21 5.1k PIO0_5
C5 100nF
C6 100nF
C7 100nF
C8 100nF
R14 10k
PIO0_3 USB_VBUS
R11 20k
D1 1N5819
5V
U2 AMS1117-3.3V
IN
VOUT
VTAP
GND
R19 5.1k
LED2
C9 100nF
C12 22uF
C13 22uF
P1
P2
P3
DM
DP
R2 22R
R1 22R
C2 15pF
C1 15pF
R8 1.5k
Q1 9012
CN1
USB-typeB
Gnd
+5V
UD-
UD+
PIO0_6 nUSB_Connect
R9 1.5k
R10 20k
J1
MOSI1 PIO0_21
SCK1 PIO1_15
SSEL PIO0_23
nINT PIO0_14
J2
PWDN PIO0_5
nRST PIO0_17
MISO1 PIO0_22
CN3
GND
nRST/CE
SCK
MISO
PWDN
VCC
nCS
MOSI
nIRQ
N.C.
SPI-CONNECT
nRST PIO0_17
SCK1 PIO1_15
MISO1 PIO0_22
PWDN PIO0_5
PIO0_23 SSEL
PIO0_21 MOSI1
PIO0_14 nINT
PIO0_4
CN4
DAT2
DAT3
CMD
VDD
CLK
VSS
DAT0
DAT1
CD
GND
7MSDP-B0-1012
SSEL1 PIO1_19
MOSI1 PIO0_21
SCK1 PIO1_15
MISO1 PIO0_22
R13 100k
SW1
C10 100nF
PIO0_0 RESET
User I/F SW
SW2
R12 100k
C11 100nF
PIO0_16 WAKEUP
CN2
VTref
nTRST
TDI
TMS | SWDIO
TCK | SWCLK
RTCK
TDO | SWO
RESET
DBGRQ
5V-Supply
JTAG or SWD
NC
GND
PIO0_17 R3 22R
PIO0_8 R4 22R
PIO0_7 R5 22R
PIO0_9 R6 22R
PIO0_2 R7 22R
J5
LPC11U35-SWDIO PIO0_15
LPC11U35-SWCLK PIO0_10
LPC11U35-nRESET PIO0_0
LPC-SWD
J4
UART
Jumper for UART-TXD
Jumper for UART-RXD
Title: LPC11U35 Demo Board
Project:
Date: 2017/12/20
Size: A4
Number:
Revision: 1.0
Sheet of
岁月声响
shop273307141.taobao.com
popctrl@163.com
Cortex
Thumb
ARM