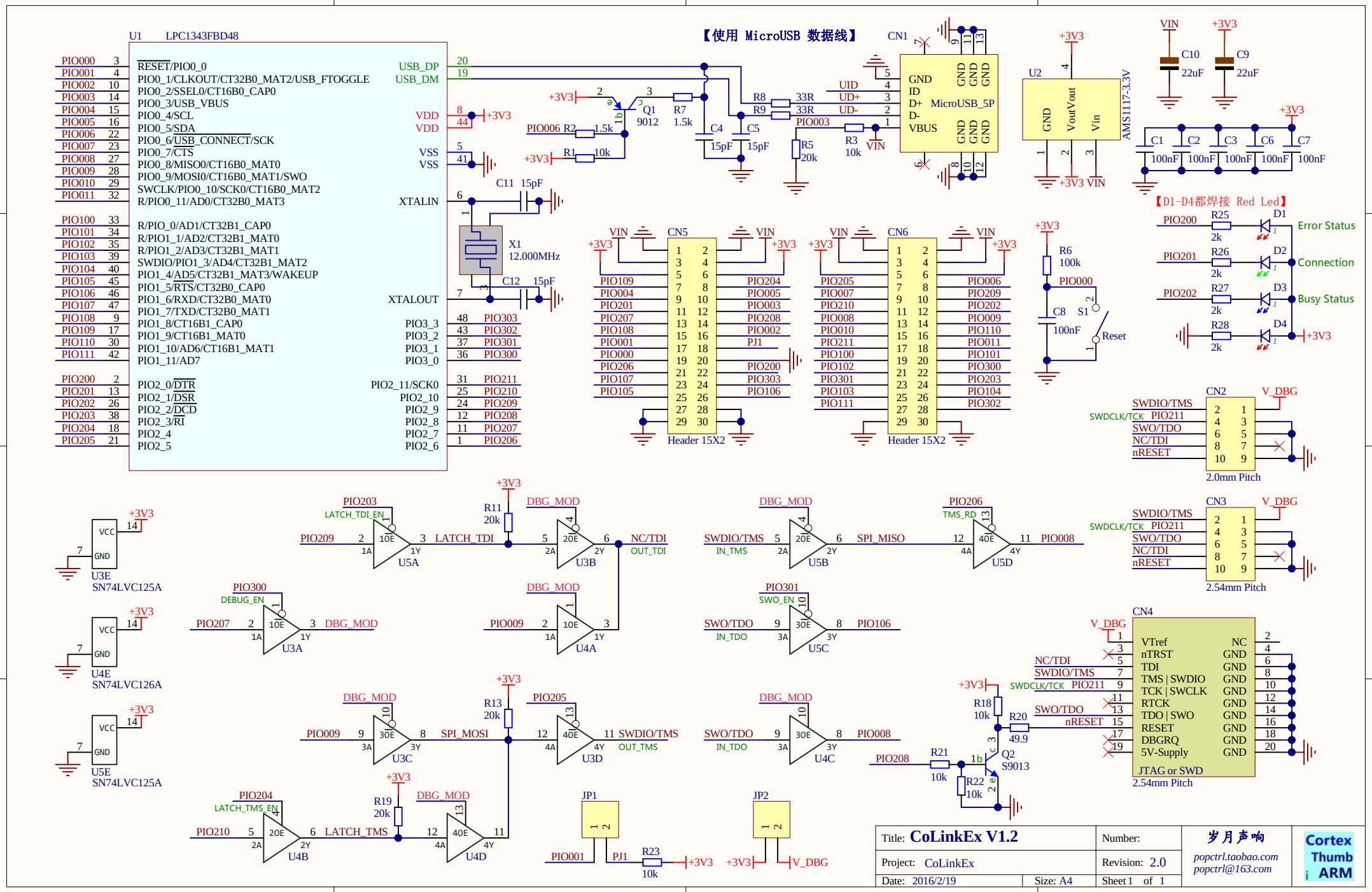
【使用 MicroUSB 数据线】
U1 LPC1343FBD48
RESET/PIO0_0
PIO0_1/CLKOUT/CT32B0_MAT2/USB_FTOGGLE
PIO0_2/SSEL0/CT16B0_CAP0
PIO0_3/USB_VBUS
PIO0_4/SCL
PIO0_5/SDA
PIO0_6/USB_CONNECT/SCK
PIO0_7/CTS
PIO0_8/MISO0/CT16B0_MAT0
PIO0_9/MOSI0/CT16B0_MAT1/SWO
SWCLK/PIO0_10/SCK0/CT16B0_MAT2
R/PIO0_11/AD0/CT32B0_MAT3
R/PIO_0/AD1/CT32B1_CAP0
R/PIO1_1/AD2/CT32B1_MAT0
R/PIO1_2/AD3/CT32B1_MAT1
SWDIO/PIO1_3/AD4/CT32B1_MAT2
PIO1_4/AD5/CT32B1_MAT3/WAKEUP
PIO1_5/RTS/CT32B0_CAP0
PIO1_6/RXD/CT32B0_MAT0
PIO1_7/TXD/CT32B0_MAT1
PIO1_8/CT16B1_CAP0
PIO1_9/CT16B1_MAT0
PIO1_10/AD6/CT16B1_MAT1
PIO1_11/AD7
PIO2_0/DTR
PIO2_1/DSR
PIO2_2/DCD
PIO2_3/RI
PIO2_4
PIO2_5
USB_DP
USB_DM
VDD
VSS
XTALIN
XTALOUT
PIO3_3
PIO3_2
PIO3_1
PIO3_0
PIO2_11/SCK0
PIO2_10
PIO2_9
PIO2_8
PIO2_7
PIO2_6
X1 12.000MHz
C11 15pF
C12 15pF
Q1 9012
R7 1.5k
R1 10k
R2 1.5k
C4 15pF
C5 15pF
R8 33R
R9 33R
R5 20k
R3 10k
CN1 MicroUSB_5P
GND ID D+ D- VBUS
UID UD+ UD-
U2 AMS1117-3.3V
GND VoutVout Vin
C10 22uF
C9 22uF
C1 100nF
C2 100nF
C3 100nF
C6 100nF
C7 100nF
【D1-D4都焊接 Red Led】
R25 2k D1 Error Status
R26 2k D2 Connection
R27 2k D3 Busy Status
R28 2k D4
CN5 Header 15X2
CN6 Header 15X2
R6 100k
C8 100nF
S1 Reset
CN2 2.0mm Pitch
CN3 2.54mm Pitch
SWDIO/TMS
SWDCLK/TCK
SWO/TDO
NC/TDI
nRESET
V_DBG
U3E SN74LVC125A
U4E SN74LVC126A
U5E SN74LVC125A
U5A U3B U5B U5D U3A U4A U5C U3C U3D U4C U4B U4D
LATCH_TDI_EN
LATCH_TDI
DEBUG_EN
DBG_MOD
IN_TMS
SPI_MISO
TMS_RD
SWO_EN
IN_TDO
SPI_MOSI
OUT_TDI
OUT_TMS
LATCH_TMS_EN
LATCH_TMS
R11 20k
R13 20k
R19 20k
JP1
JP2
R23 10k
CN4 JTAG or SWD 2.54mm Pitch
VTref
nTRST
TDI
TMS | SWDIO
TCK | SWCLK
RTCK
TDO | SWO
RESET
DBGRQ
5V-Supply
NC
GND
R18 10k
R20 49.9
R21 10k
R22 10k
Q2 S9013
Title: CoLinkEx V1.2
Project: CoLinkEx
Date: 2016/2/19
Size: A4
Number:
Revision: 2.0
Sheet 1 of 1
岁月声响
popctrl.taobao.com
popctrl@163.com
Cortex Thumb ARM