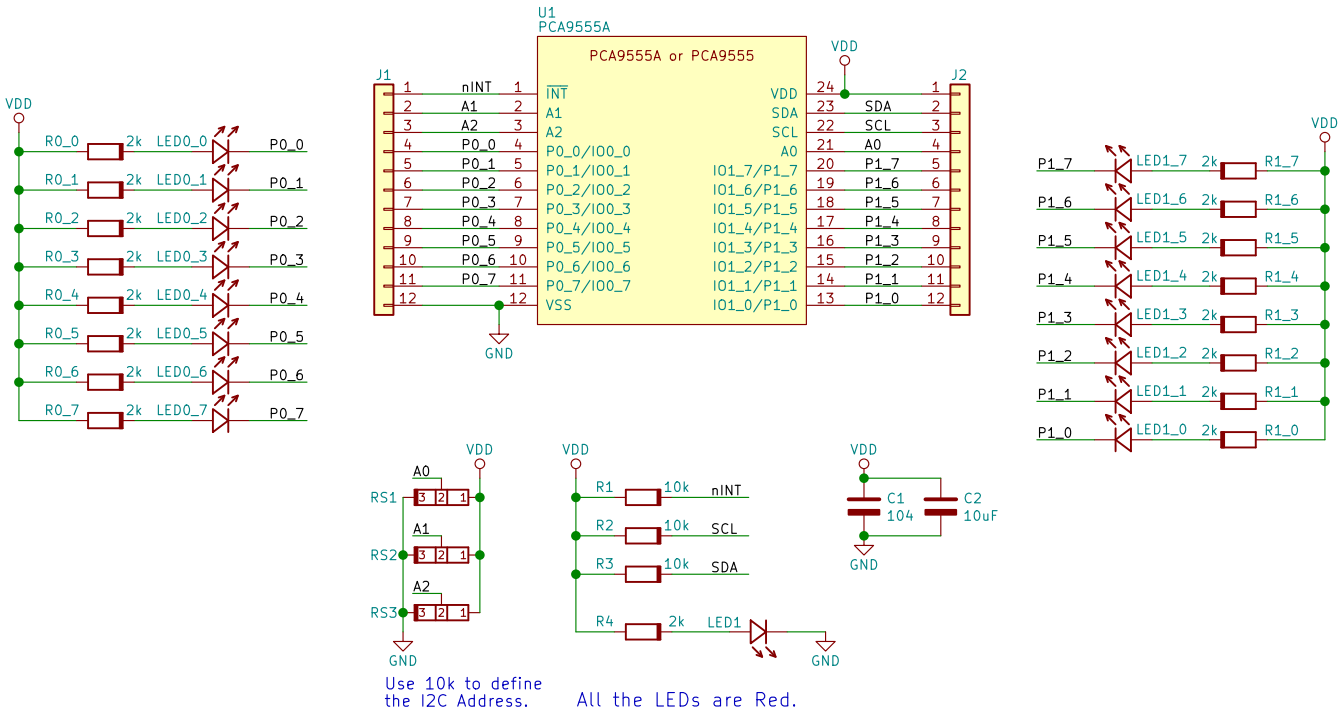

Sheet: 1/1		岁月 声响
File: PCA9555A.sch		
Title: ***PCA9555A or PCA9555 I2C->GPIO Board***		
Size: A4	Date(y-m-d): 2018-10-24	**Rev:** 1.0
KiCad 5.0.0 rc2	*shop273307141.taobao.com*	Id: 1811