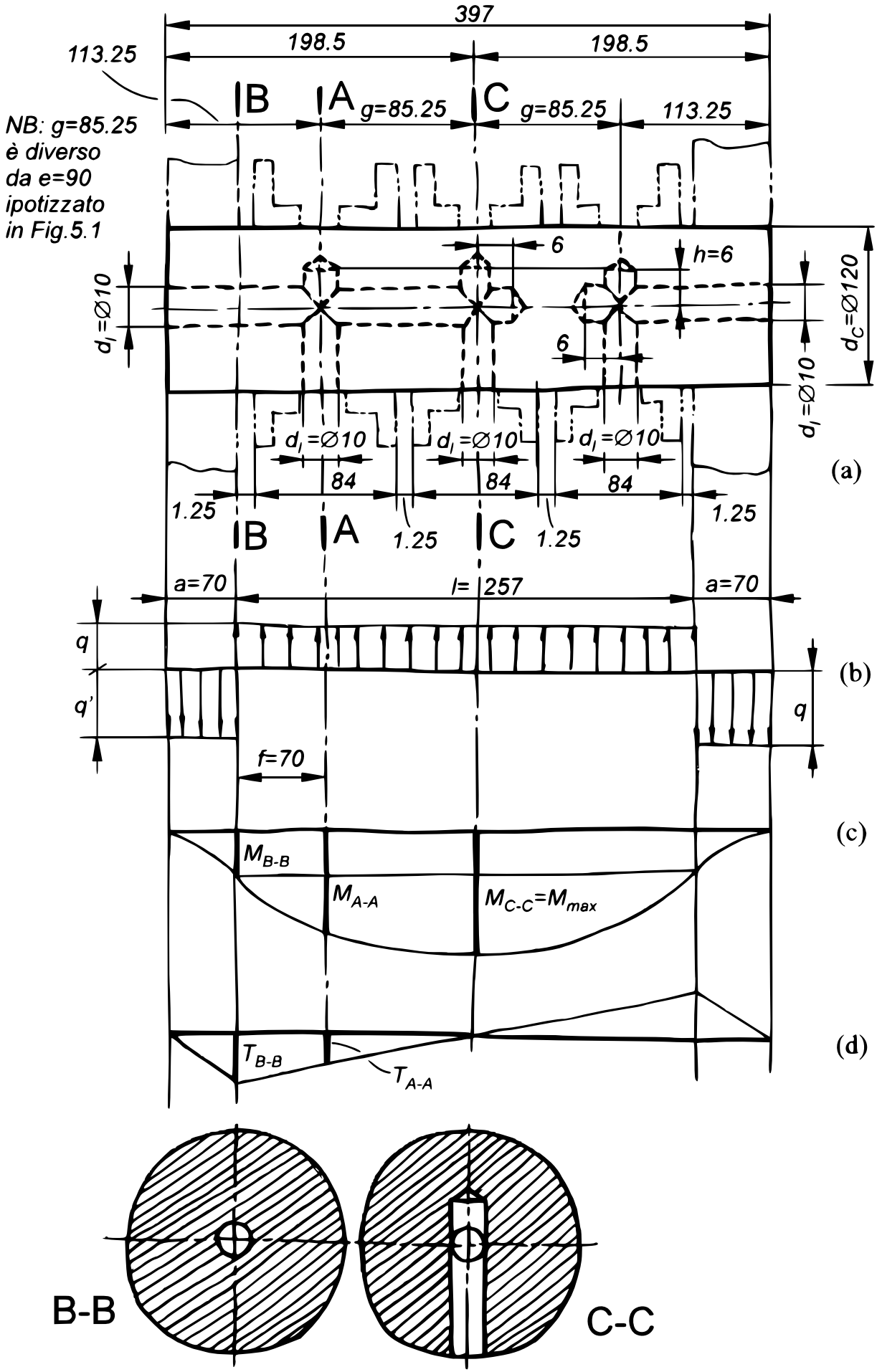
397
198.5
198.5
113.25
B
A
g=85.25
C
g=85.25
113.25
NB: g=85.25
è diverso
da e=90
ipotizzato
in Fig.5.1
6
h=6
d_l=Ø10
d_C=Ø120
6
d_l=Ø10
d_l=Ø10
d_l=Ø10
d_l=Ø10
84
84
84
(a)
1.25
1.25
1.25
1.25
B
A
C
a=70
l= 257
a=70
q
q'
q
(b)
f=70
(c)
M_{B-B}
M_{A-A}
$M_{C-C}=M_{max}$
(d)
T_{B-B}
T_{A-A}
B-B
C-C

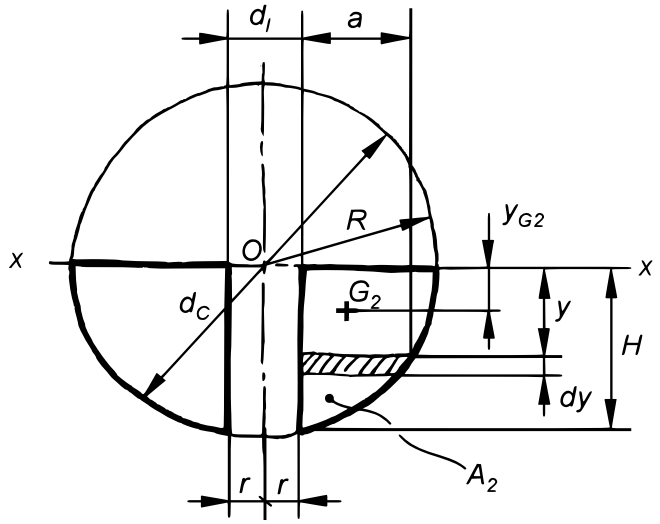
d_I
a
R
y_{G2}
x
O
x
d_C
G_2
y
H
dy
A_2
r
r

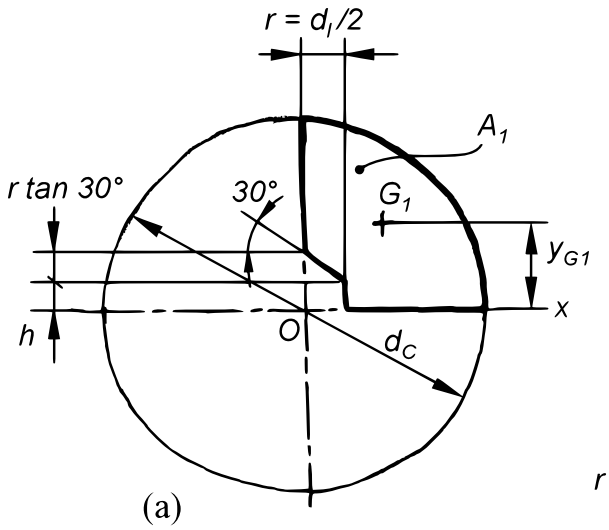
$r = d_I/2$
A_1
r tan 30°
30°
G_1
y_{G1}
x
h
O
d_C
(a)

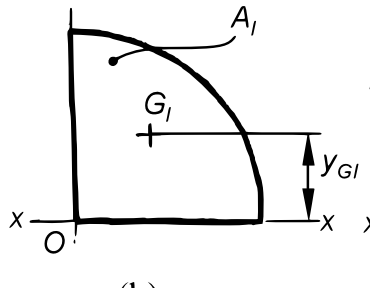
A_I
G_I
y_{GI}
x
O
x
(b)

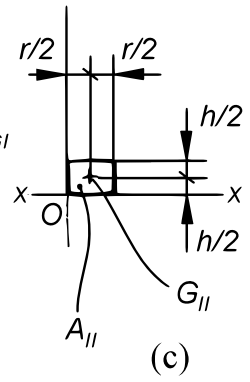
r/2
r/2
h/2
x
O
x
h/2
G_{II}
A_{II}
(c)

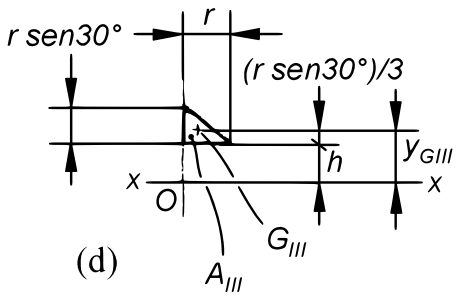
r sen30°
r
(r sen30°)/3
y_{GIII}
h
x
O
x
G_{III}
A_{III}
(d)

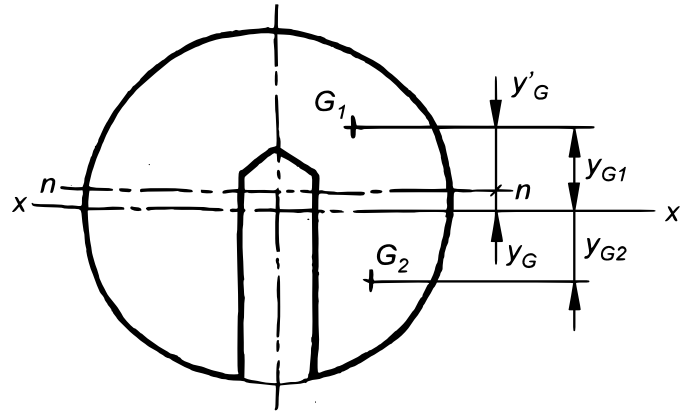
G_1
y'_G
y_{G1}
n
n
x
x
y_G
y_{G2}
G_2

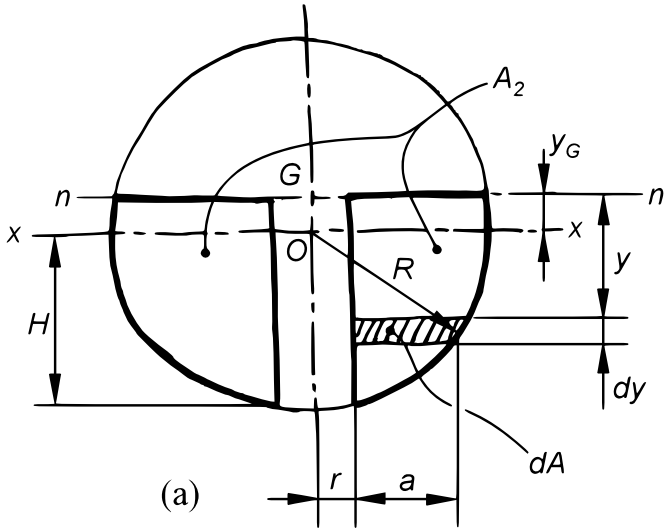
A2
yG
G
n
n
x
x
O
R
y
H
dy
dA
r
a

(a)

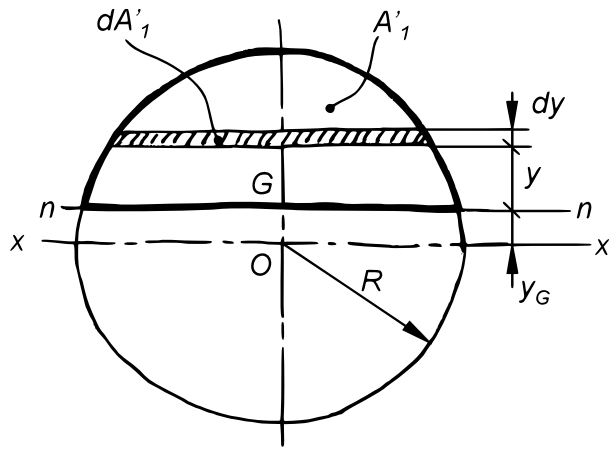
dA'1
A'1
dy
y
G
n
n
x
x
O
R
yG

(b)

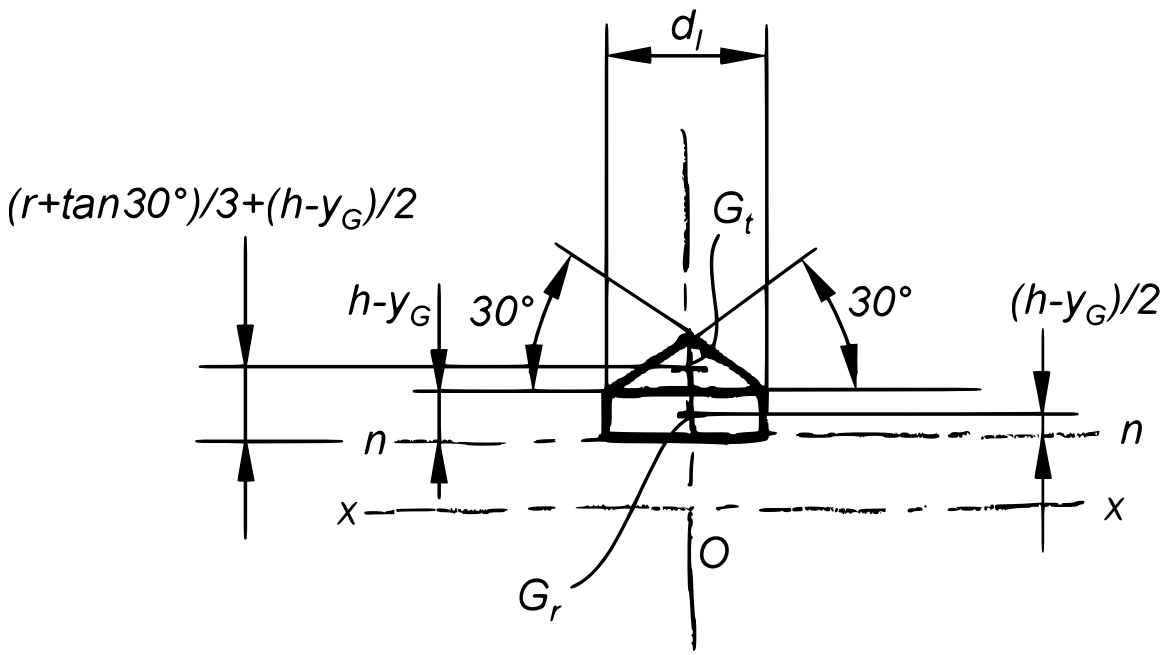
dl
(r+tan30°)/3+(h-yG)/2
Gt
h-yG
30°
30°
(h-yG)/2
n
n
x
x
O
Gr

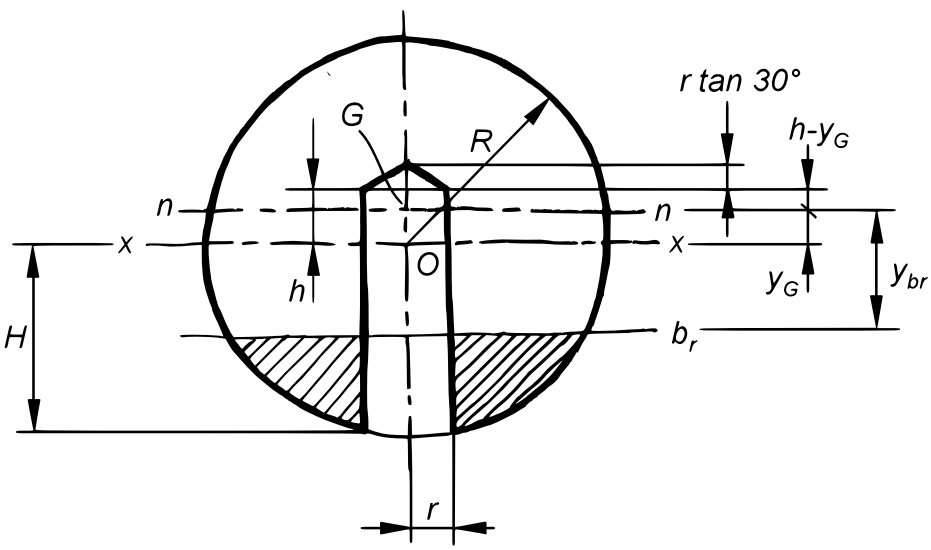
r tan 30°
G
R
h-yG
n
n
x
x
O
h
yG
ybr
H
br
r

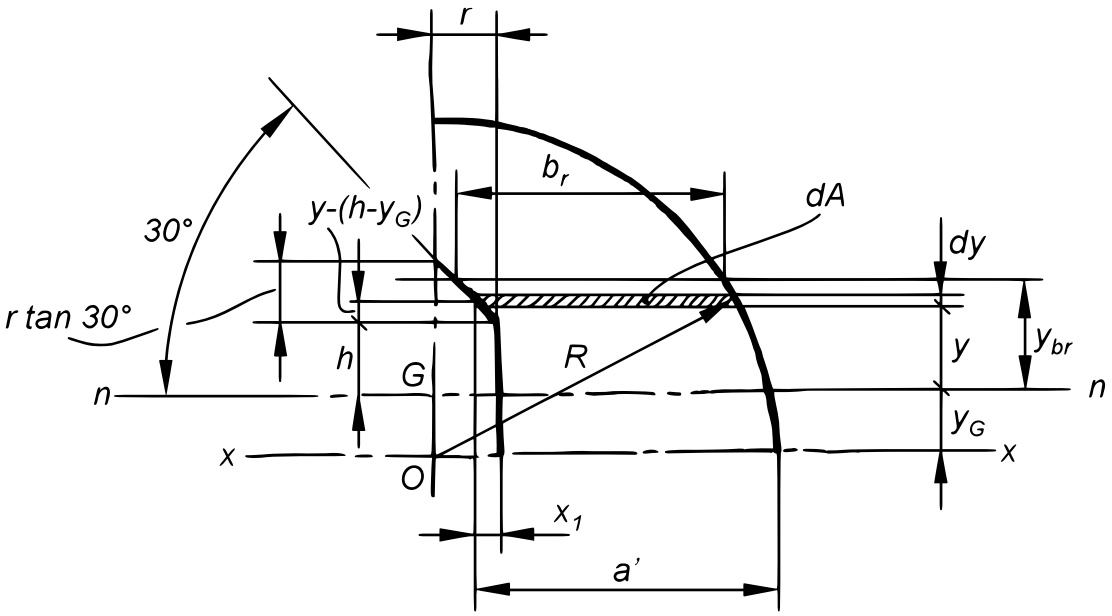
r
30°
b_r
dA
$y-(h-y_G)$
dy
r tan 30°
h
G
R
y
y_{br}
n
n
y_G
x
x
O
x_1
a'

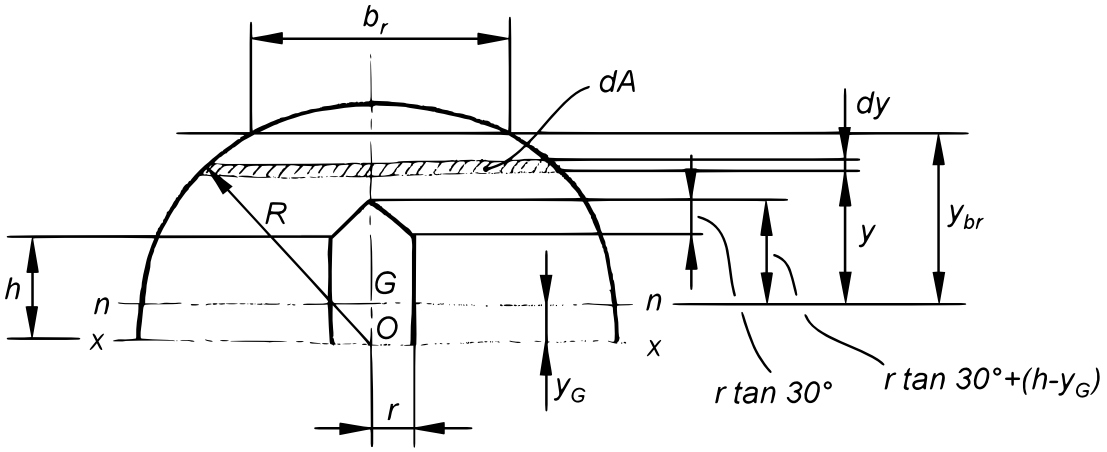
b_r
dA
dy
R
y
y_{br}
h
G
n
n
O
x
x
y_G
r
r tan 30°
r tan 30°+(h-y_G)

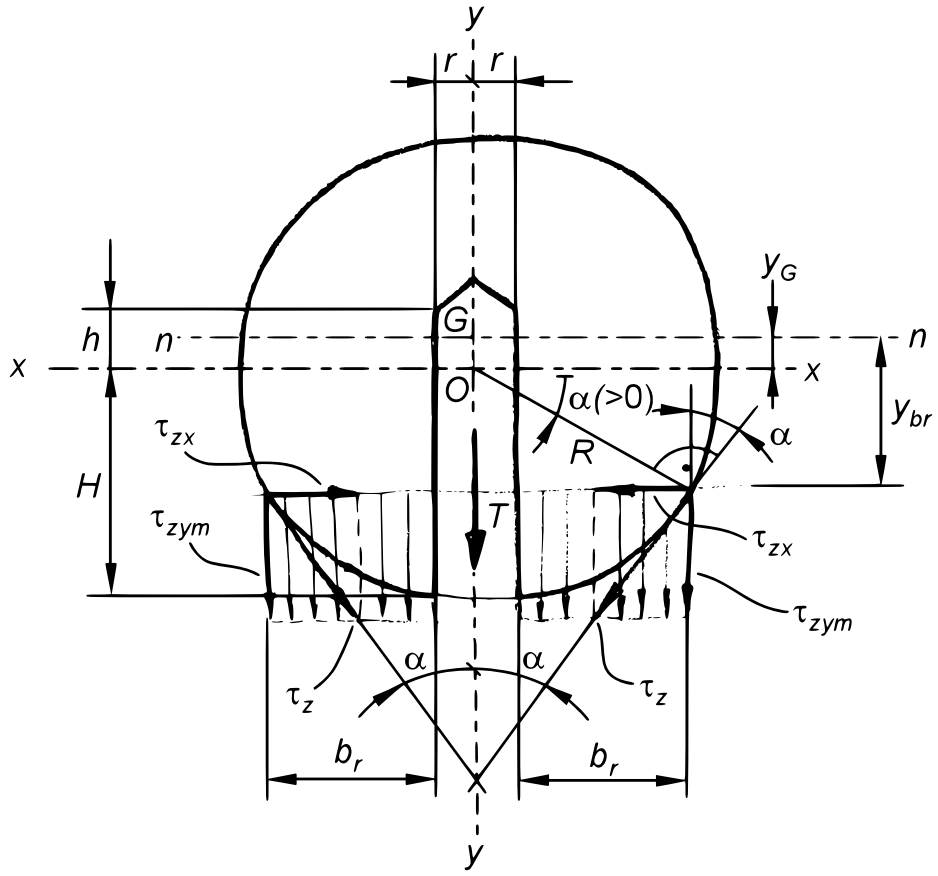
y
r
r
y_G
h
n
G
n
x
x
O
α(>0)
α
y_{br}
τ_{zx}
R
H
T
τ_{zym}
τ_{zx}
τ_{zym}
α
α
τ_z
τ_z
b_r
b_r
y

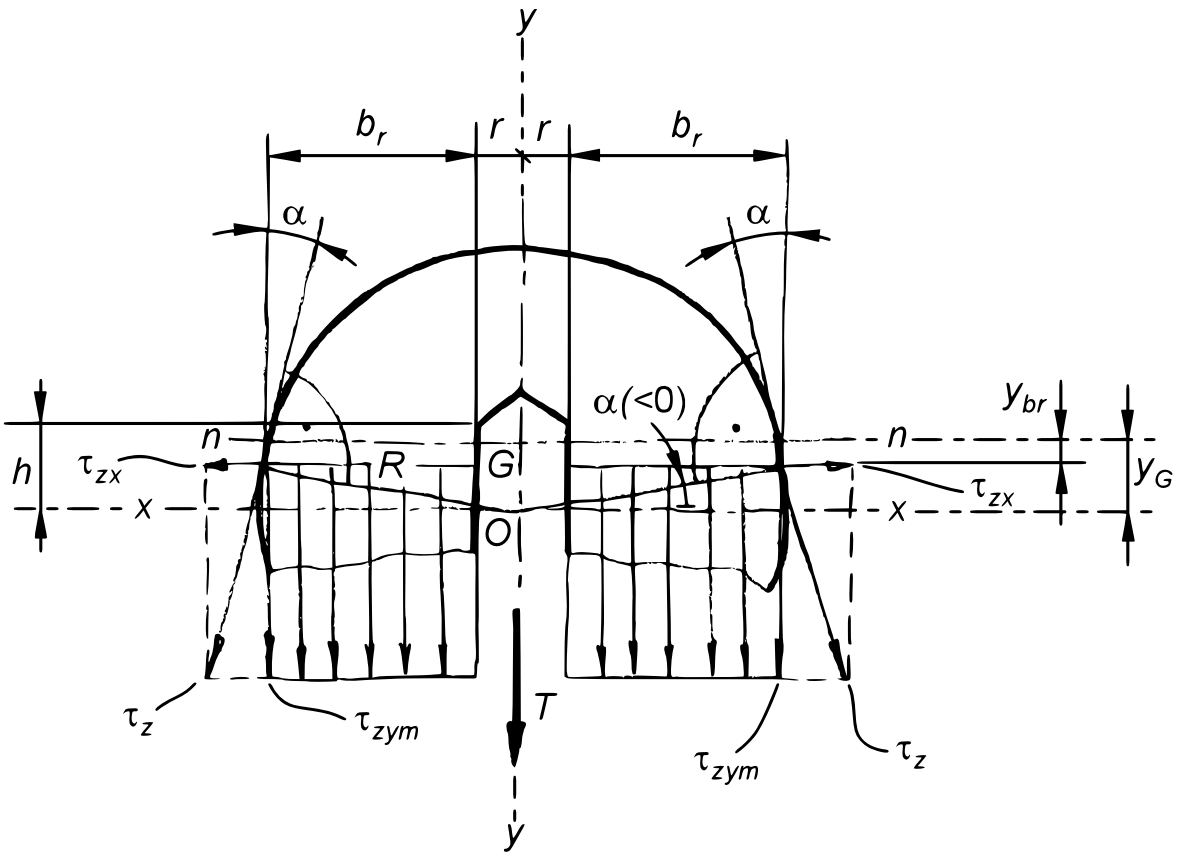
y
b_r
r
r
b_r
α
α
α(<0)
y_{br}
n
n
h
τ_{zx}
R
G
τ_{zx}
y_G
x
x
O
τ_z
τ_{zym}
T
τ_{zym}
τ_z
y

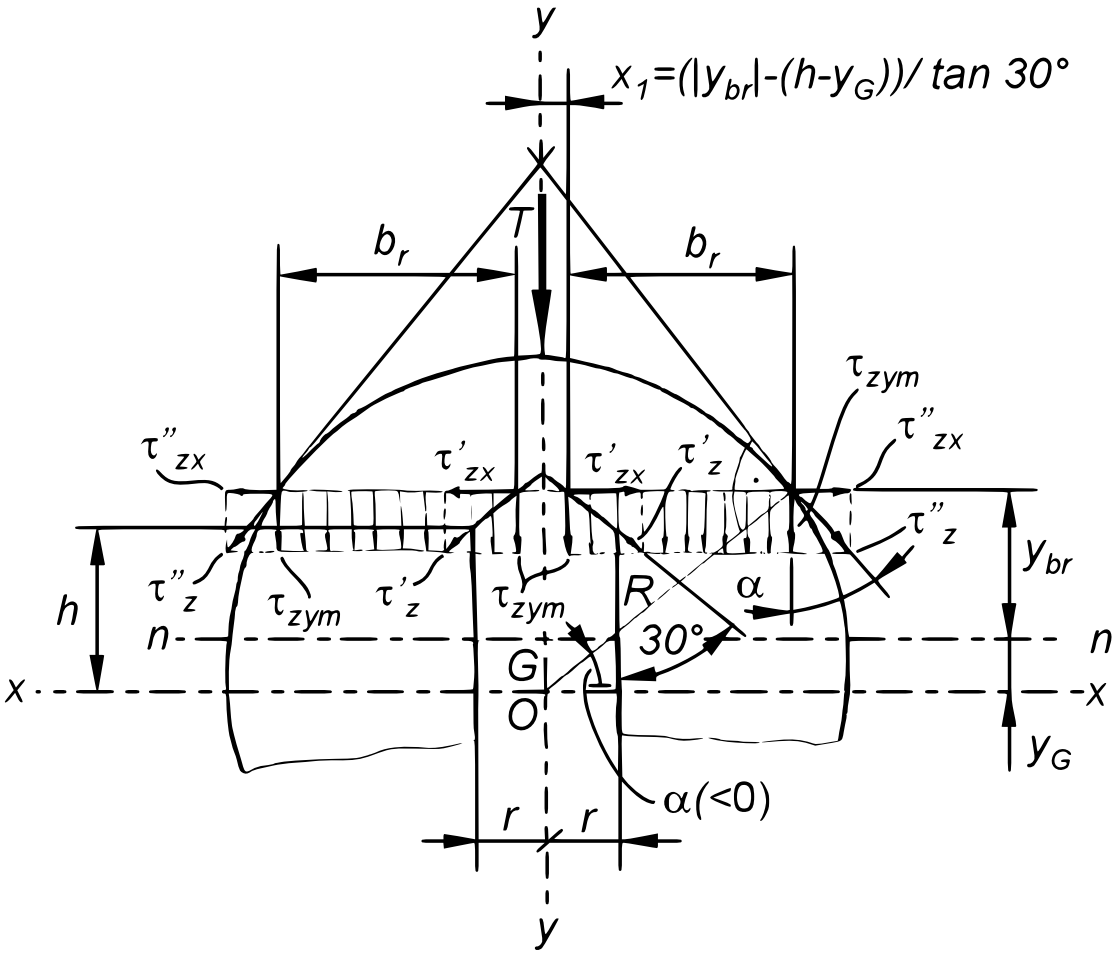
y
$x_1=(|y_{br}|-(h-y_G))/\tan 30°$
T
b_r
b_r
τ_{zym}
τ''_{zx}
τ''_{zx}
τ'_{zx}
τ'_{zx}
τ'_z
τ''_z
y_{br}
τ''_z
τ_{zym}
τ'_z
τ_{zym}
R
α
h
n
30°
n
G
x
x
O
y_G
α(<0)
r
r
y

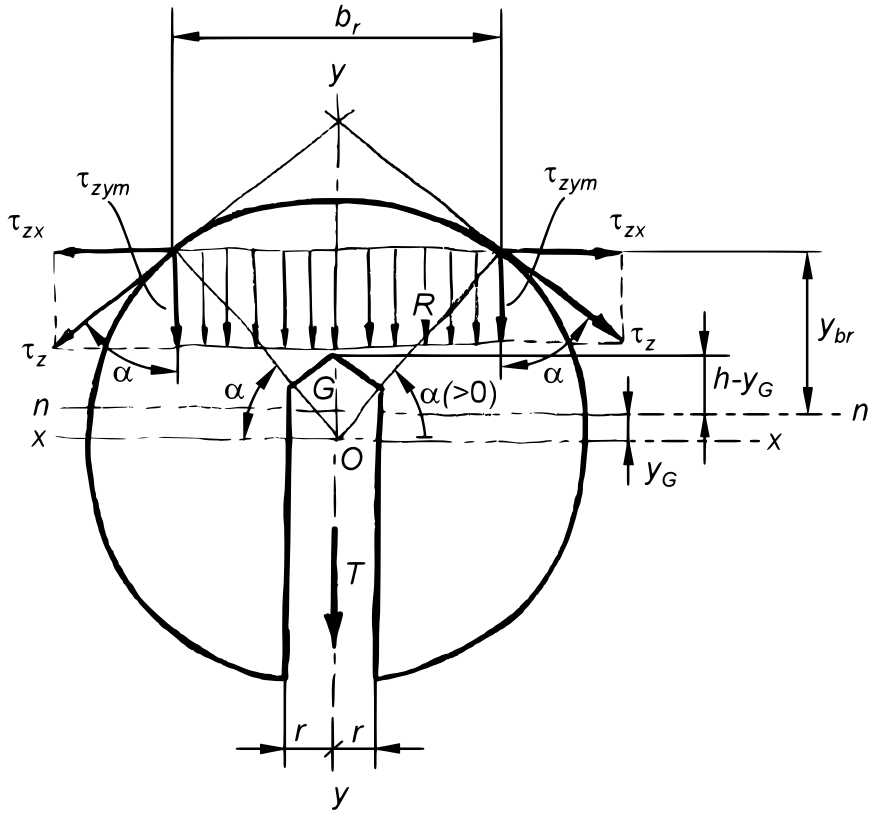
b_r
y
τ_{zym}
τ_{zym}
τ_{zx}
τ_{zx}
R
τ_z
τ_z
y_{br}
α
α
α
G
α(>0)
$h-y_G$
n
n
x
x
O
y_G
T
r
r
y

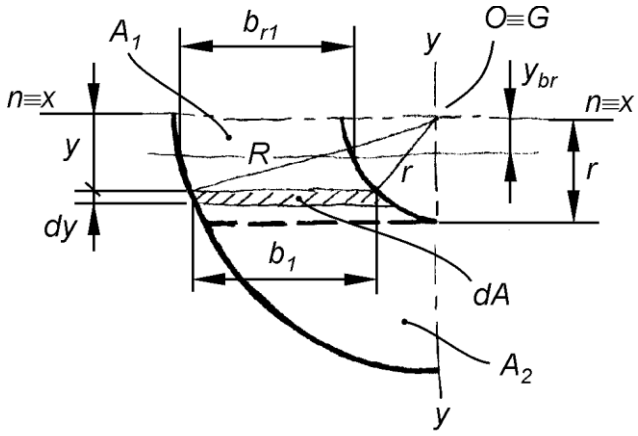
A_1
b_{r1}
y
O≡G
y_{br}
n≡x
n≡x
y
R
r
r
dy
b_1
dA
A_2
y

(a)

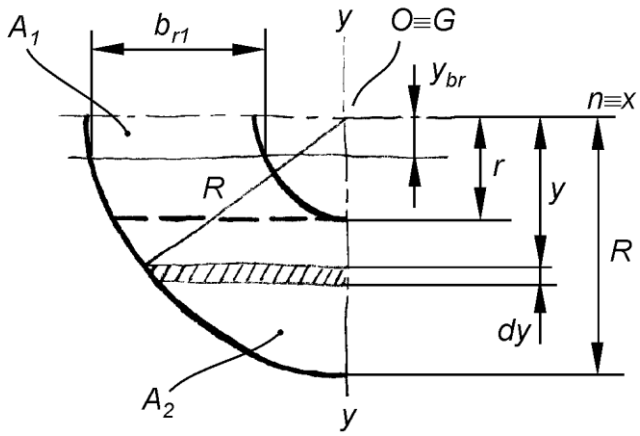
A_1
b_{r1}
y
O≡G
y_{br}
n≡x
r
R
y
R
dy
A_2
y

(b)

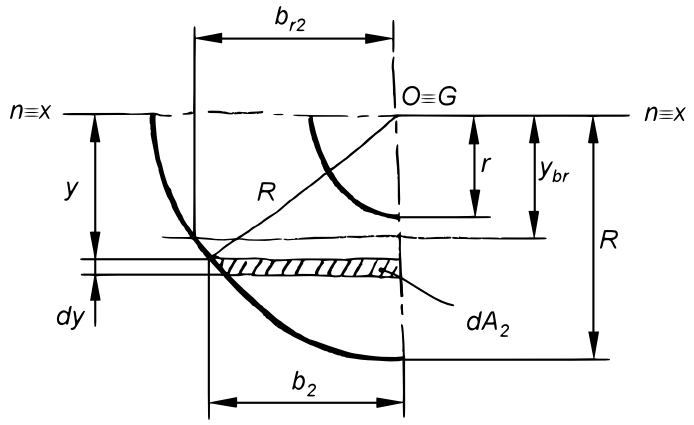
b_{r2}
n≡x
O≡G
n≡x
r
y_{br}
y
R
R
dy
dA_2
b_2

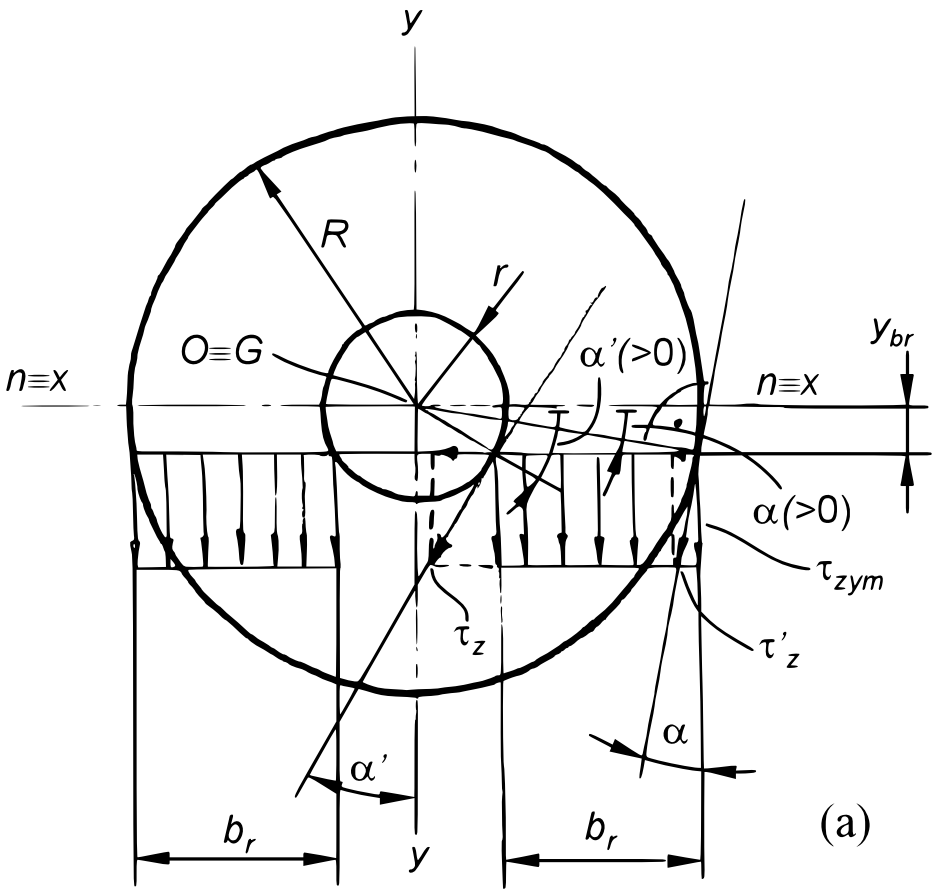
y
R
r
O≡G
n≡x
α'(>0)
n≡x
y_br
α(>0)
τ_zym
τ_z
τ'_z
α
α'
b_r
y
b_r
(a)

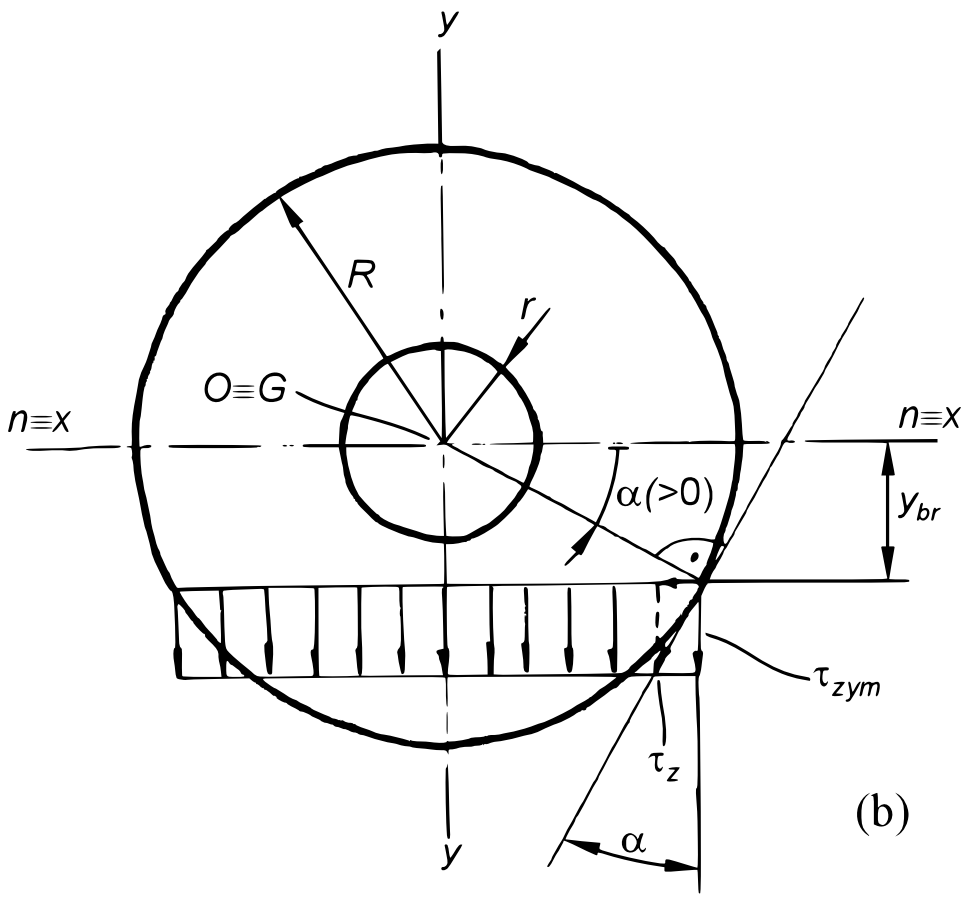
y
R
r
O≡G
n≡x
n≡x
α(>0)
y_br
τ_zym
τ_z
(b)
y
α

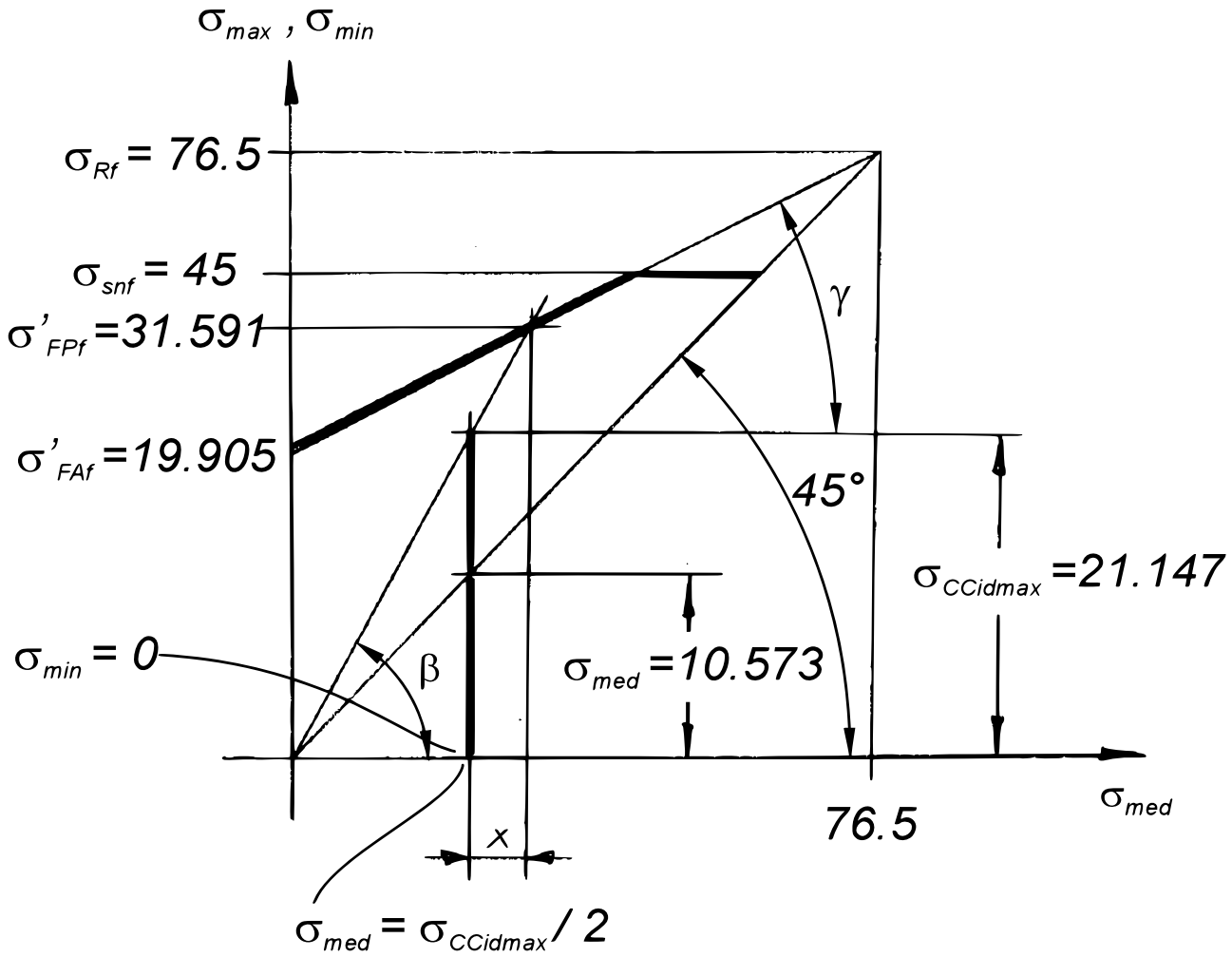
σmax , σmin
σRf = 76.5
σsnf = 45
σ'FPf =31.591
σ'FAf =19.905
σmin = 0
γ
45°
β
σCCidmax =21.147
σmed =10.573
76.5
σmed
x
σmed = σCCidmax / 2