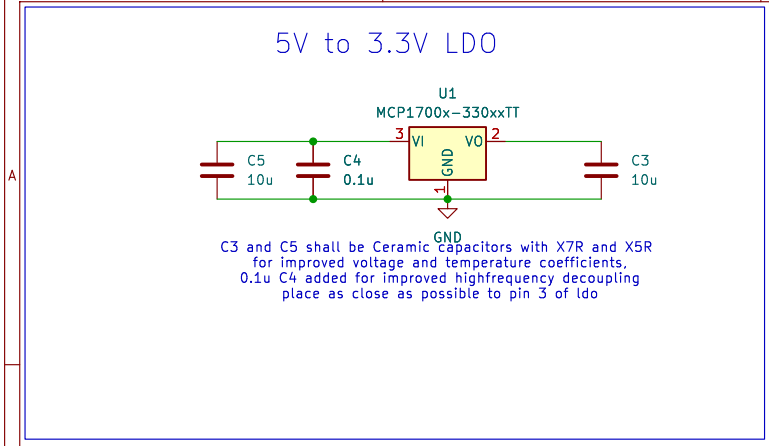

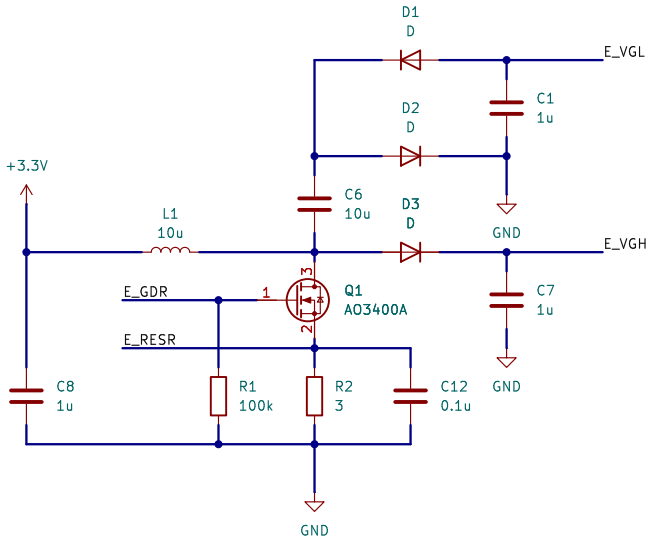

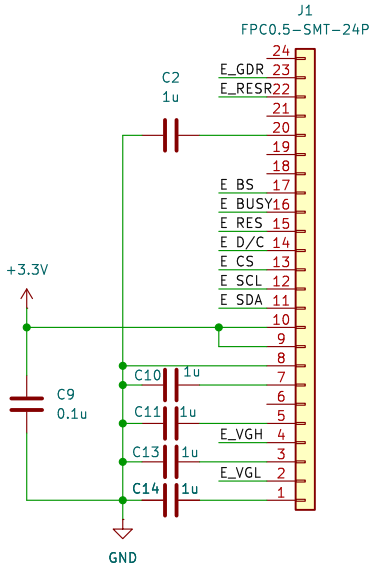

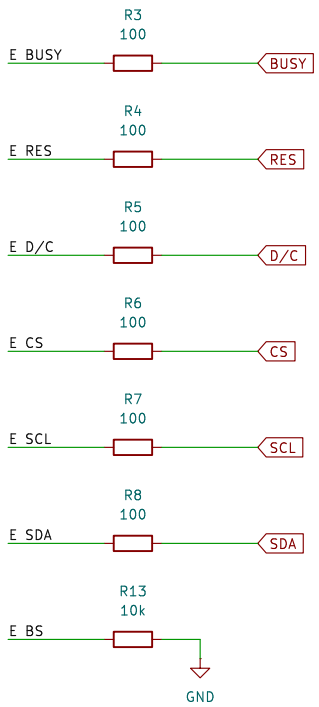

Hard Coding 4 line SPI hardware configuration
E_BS tied to VCC for 3 line SPI (not used)

Sheet: /
File: display.kicad_sch

Title:

Size: A4	Date:	Rev:
KiCad E.D.A. 9.0.7		Id: 1/3

C16 – local 100u provides buffer during battery swap (might need to increase capacitance)
D4 – schotkey diode to prevent reverse charging and draining C16
C17 – decoupling cap, place as close to pin 8 as possible

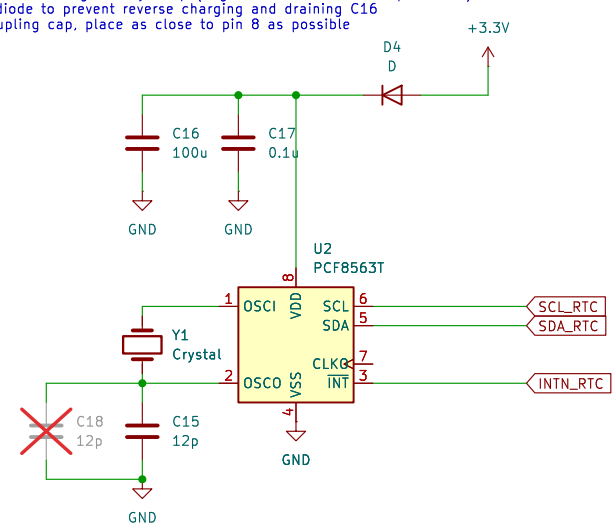

12–24 pf load cap to tune crystal

Sheet: /rtc/
File: rtc.kicad_sch

Title:

Size: A4	Date:	**Rev:**
KiCad E.D.A. 9.0.7		Id: 2/3

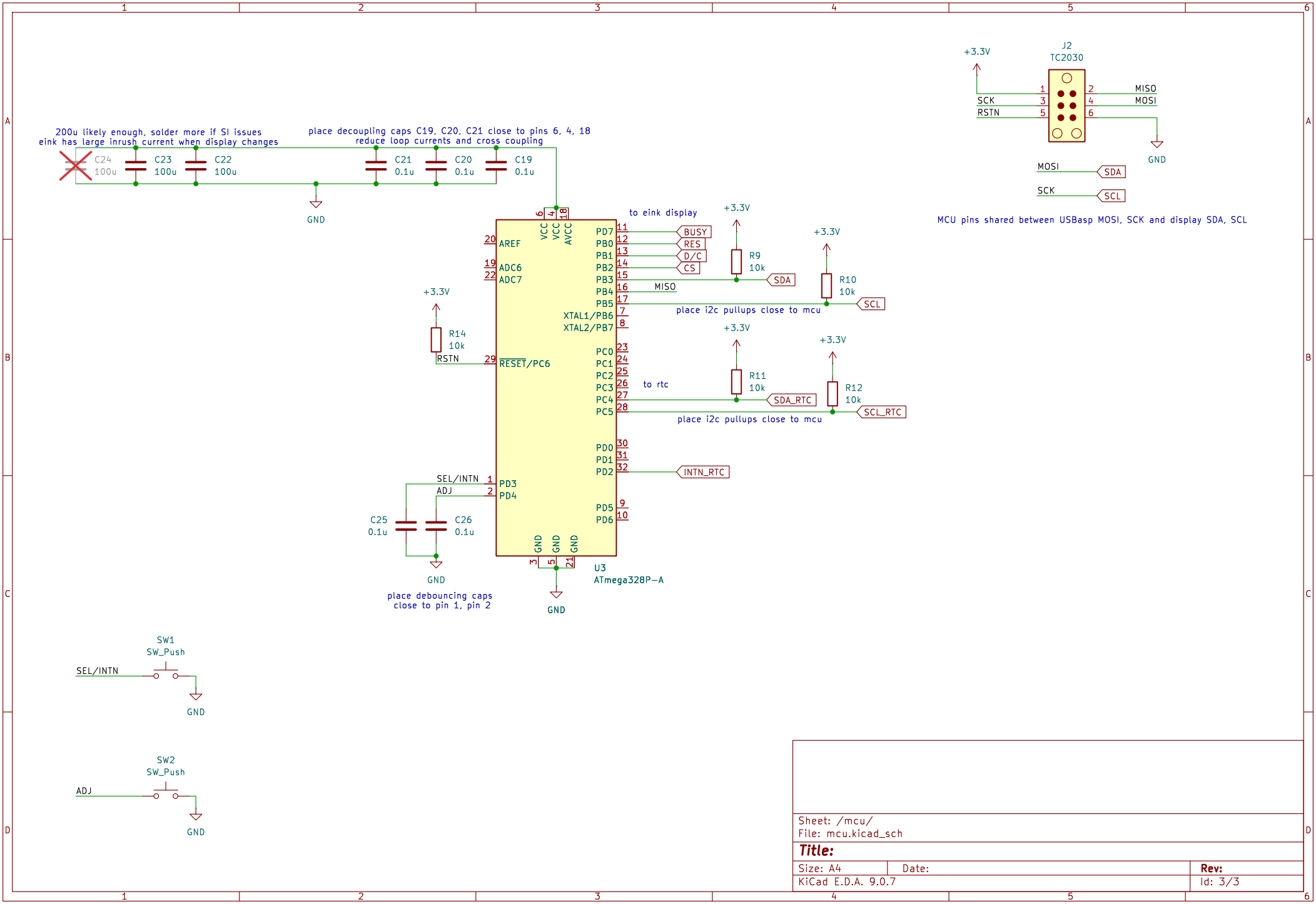

Sheet: /mcu/
File: mcu.kicad_sch

Title:

Size: A4	Date:	Rev:
KiCad E.D.A. 9.0.7		Id: 3/3