Sheetname: Flight Controller MCU

MCU

Sheetfile: mcu.kicad_sch

Sheetname: Sensors

SENSORS

Sheetfile: sensors.kicad_sch

Power

POWER

File: power.kicad_sch

Connectivity

CONN.

File: connectivity.kicad_sch

Sheet: /
File: ESP-FC Rev.0.0.kicad_sch

Title:

Size: A4	Date:	**Rev:**
KiCad E.D.A. 10.0.6		Id: 1/5

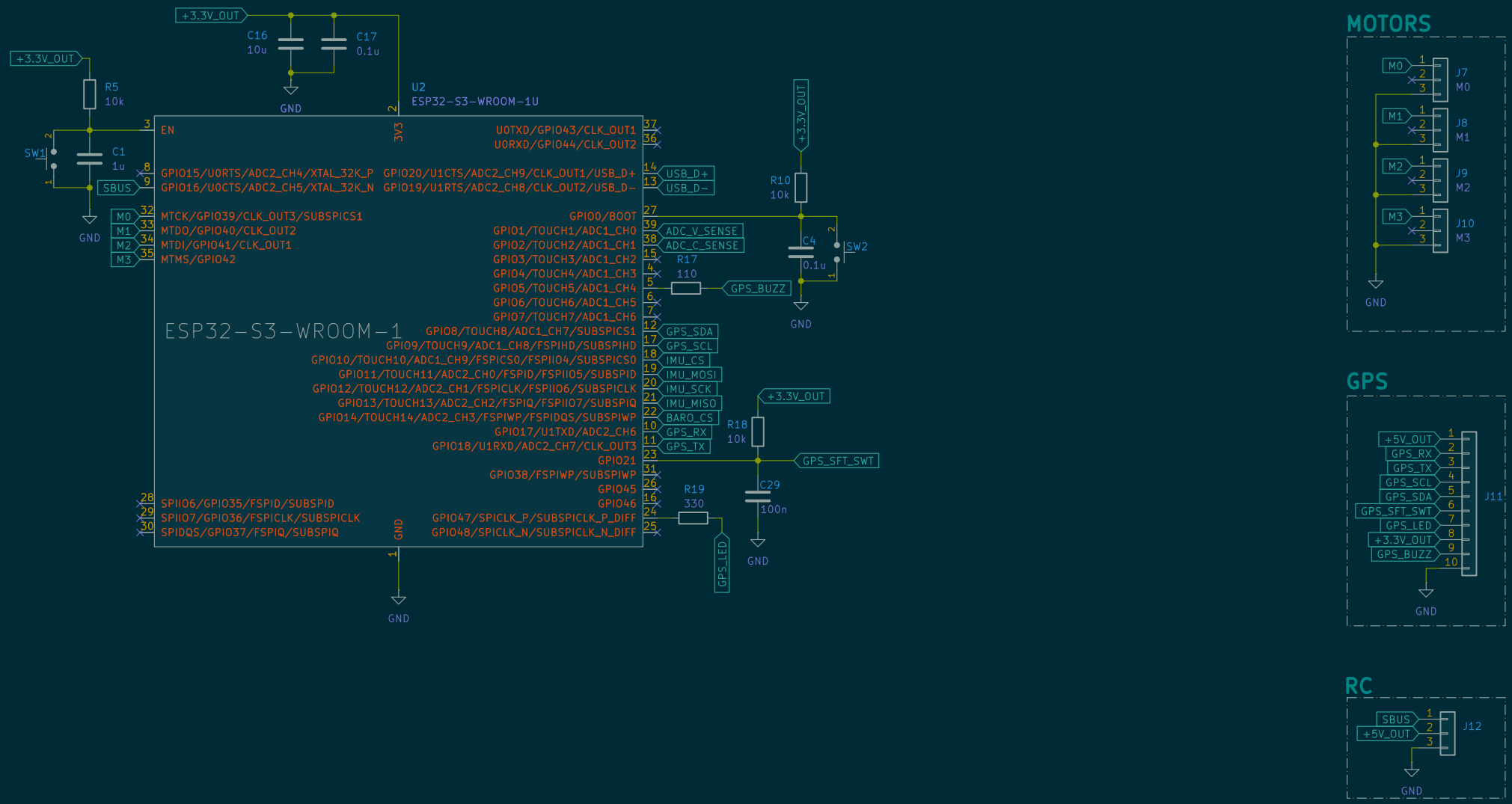

Sheet: /Flight Controller MCU/
File: mcu.kicad_sch

Title:

Size: A4	Date:	Rev:
KiCad E.D.A. 10.0.6		Id: 2/5

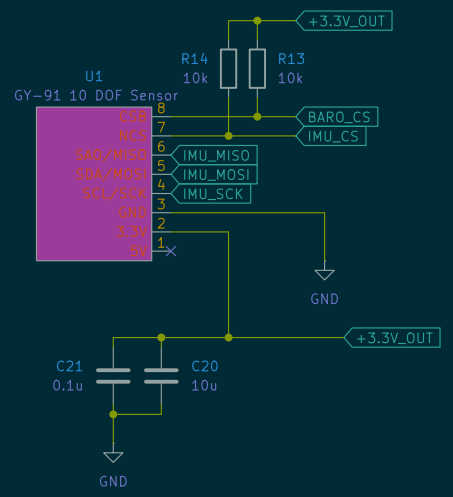

Sheet: /Sensors/
File: sensors.kicad_sch

Title:

Size: A4	Date:	Rev:
KiCad E.D.A. 10.0.6		Id: 3/5

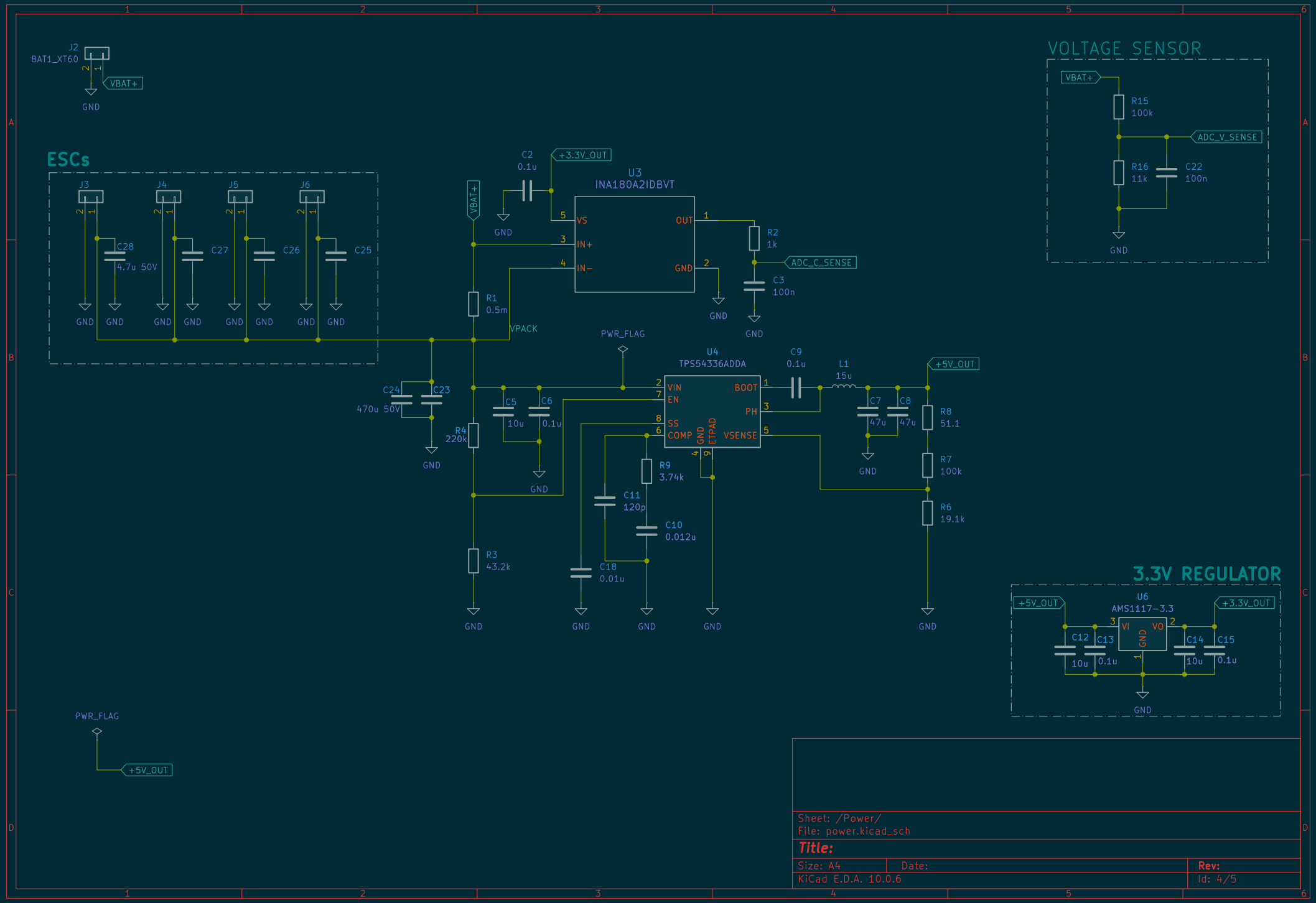

Sheet: /Power/
File: power.kicad_sch

Title:

Size: A4	Date:	Rev:
KiCad E.D.A. 10.0.6		Id: 4/5

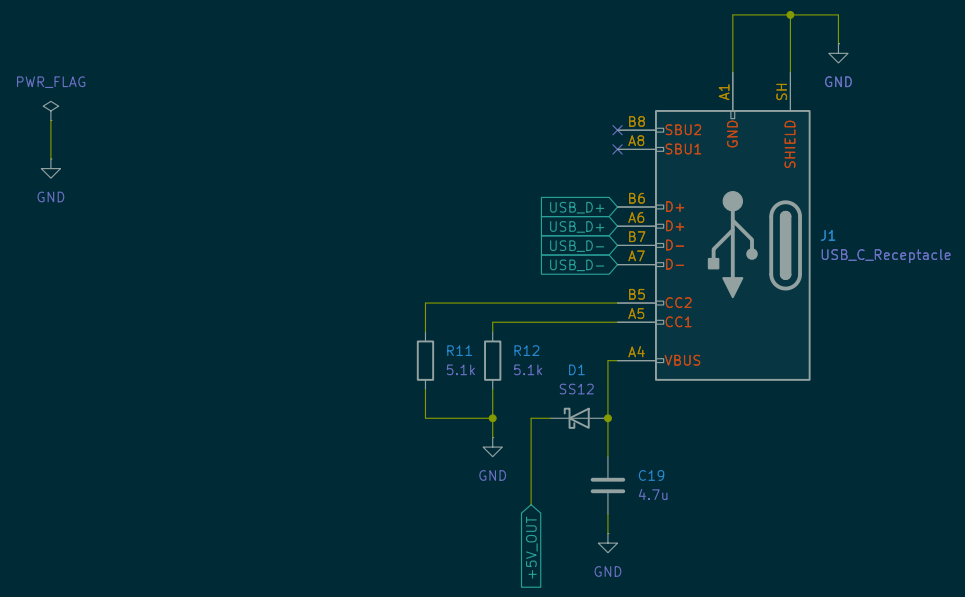

Sheet: /Connectivity/
File: connectivity.kicad_sch

Title:

Size: A4	Date:	Rev:
KiCad E.D.A. 10.0.6		Id: 5/5