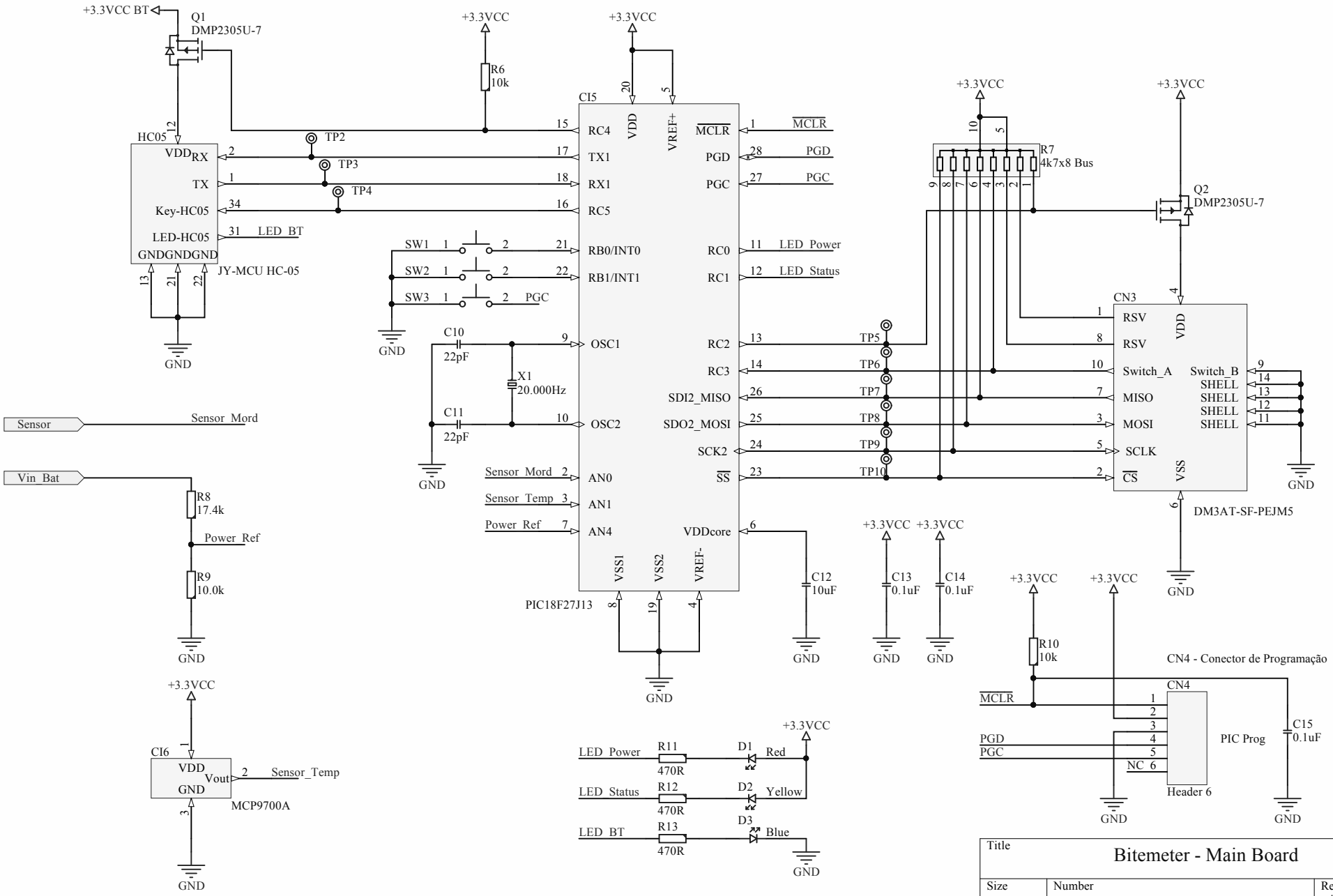

Title	Bitemeter - Main Board		
Size A4	Number		Revision Arnaldo Gomes
Date:	23-Jan-15	Sheet of	02/02
File:	E:\Mestrado\..\LB - MainBoard.SchDoc	Drawn By:	Arnaldo Gomes