POLITECNICO DI TORINO

Master's Degree in Electronics

Master's Degree Thesis

Loss analysis of a 4-level,flying capacitor,bridge-less,totem-pole PFC

Supervisors
Prof. Francesco MUSOLINO
Ing. Marco PALMA

Candidate
Giorgio ARMIGNACCO

MONTH 2026

Table of Contents

1 Simulations overview 3
1.1 Simulation setup . . . 3
1.1.1 Slow-Leg MOSFET SPICE simulations . . . 3
1.1.2 Fast-Leg MOSFET SPICE simulations . . . 4
1.1.3 PFC simulation . . . 4
1.2 Simulation results . . . 4

List of Tables 9

List of Figures 10

Chapter 1

Simulations overview

In order to perform the simulations a combination of SPICE and PLECS have been used.
The first one was primarly used to validate all the device models of the single components,and produce all the necessary data to be given to the PLECS simulator, in particular the energy-on, energy-off of the MOSFETs in unision with their driver circuit.

1.1 Simulation setup

1.1.1 Slow-Leg MOSFET SPICE simulations

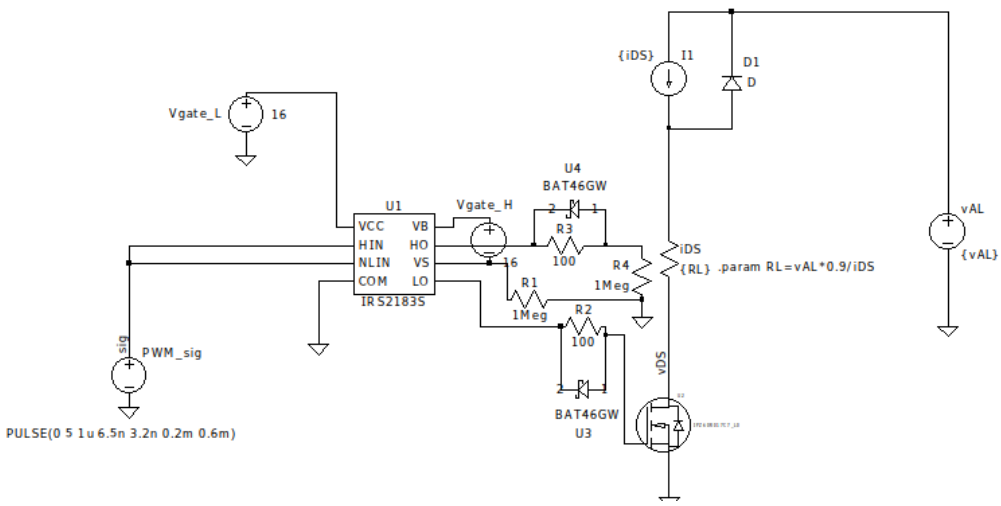

Figure 1.1: SPICE simulation for Si Energy

The circuit shown here was simulated using the SPICE software, a sweep of the Vds voltage and Ids current were performed in order to retrieve data about the energy required by the whole system MOSFET+driver during the switching sequences , and the MOSFET conduction losses. Those data were later fed to the PLECS simulation software in order to perform losses analysis. All the elements included in this SPICE model where prior compared against their respective datasheet, in order to confirm that the simulated behaviour mirrored reality.

1.1.2 Fast-Leg MOSFET SPICE simulations

STILL PENDING NO AVAILABLE SPICE MODEL YET

1.1.3 PFC simulation

The entire PFC system was simulated using the PLECS software, this is much faster than any SPICE simulation, since PLECS runs on a system level, and the simulated devices are either on or off , no transients are present, that's why the energy-on/energy-off SPICE simulations were fundamental, since those data are needed by the PLECS software to perform any kind of loss analysis.

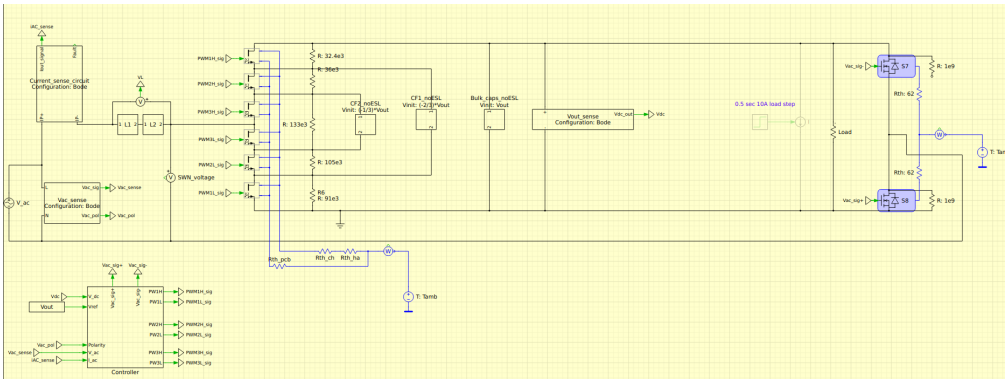

Figure 1.2: PFC PLECS schematich

1.2 Simulation results

These simulations DO NOT take into account:

- House-keeping PSU stand-by power and efficiency
- Gate driver consumption (IMPORTANT will vary with load?)
- Sensing circuits
- Controller consumption
- EMI filters

Only the power section components have been included with some limitations:

- NO ESL on Flying caps
- NO ESL on HF decoupling caps
- NO ESL on Electrolytic bulk caps
- ESR ONLY on the inductors
- GaN PLECS model incorrect?

All remaining elements have been modeled as closely as possible to the EPC91107 datasheet

- feedback filtering chain
- controller to gate driver filtering chain
- devices parasitic

A swept power analysis have been performed from 50W to 5000W.

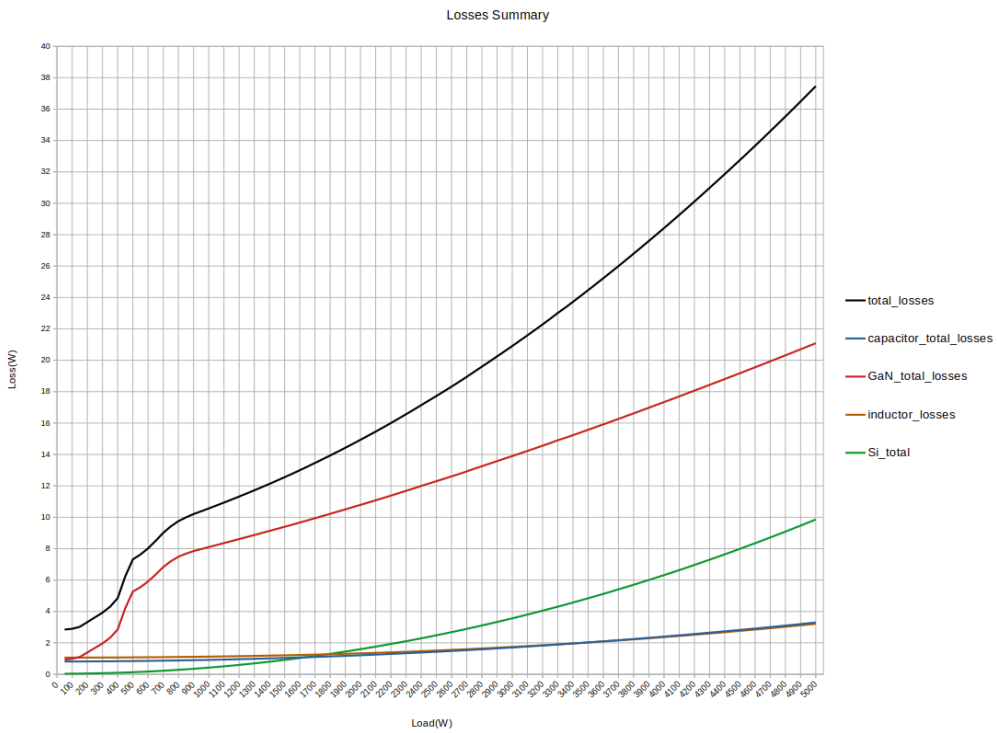

Figure 1.3: Losses summary

The greatest contributors to losses are the fast swithing devices, whose impact on losses grows linearly with the power consumption.
Those losses are primarly of the switching type as shown in the graph below 1.4
The second most relevant elements are the losses from the slow leg devices.
These are all conduction losses 1.5 and they grow quadratically with the applied load.
Flying capacitors are other components which show a quadratic behaviour in the the losses,while HF decoupling caps and bulk caps do not show any meaningfull variation.

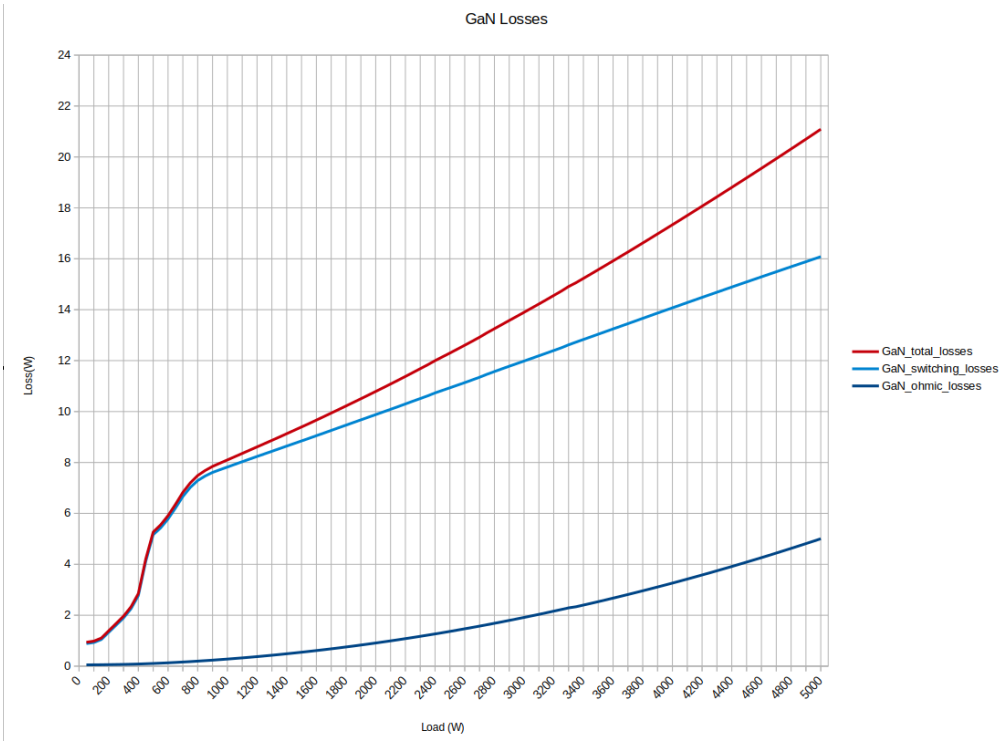

Figure 1.4: GaN losses detail

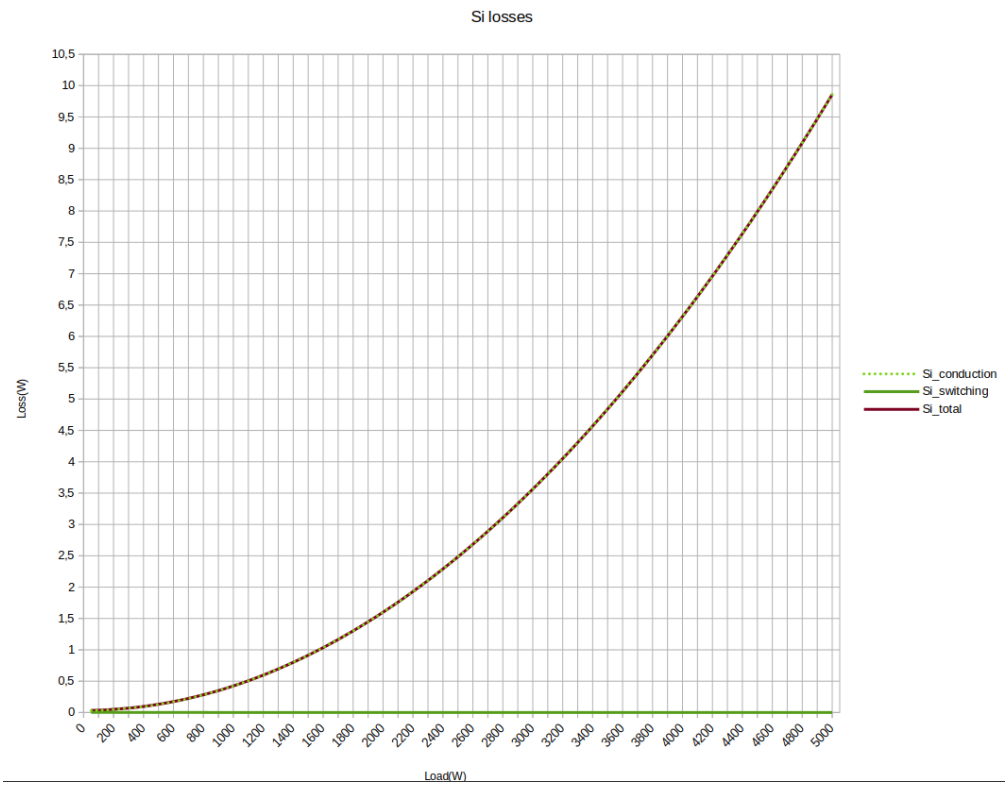

Figure 1.5: Si Losses detail

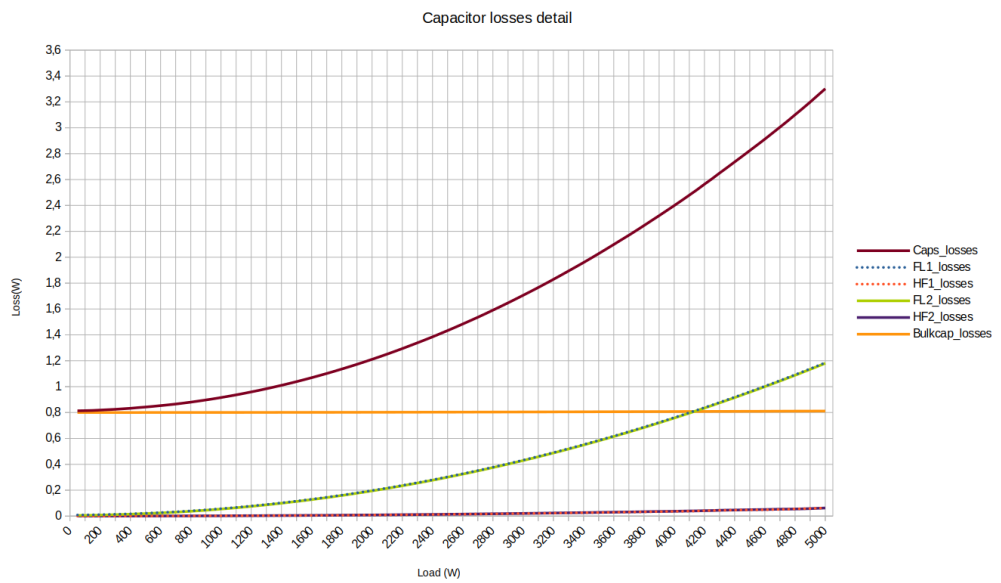

Figure 1.6: Capacitors losses detail

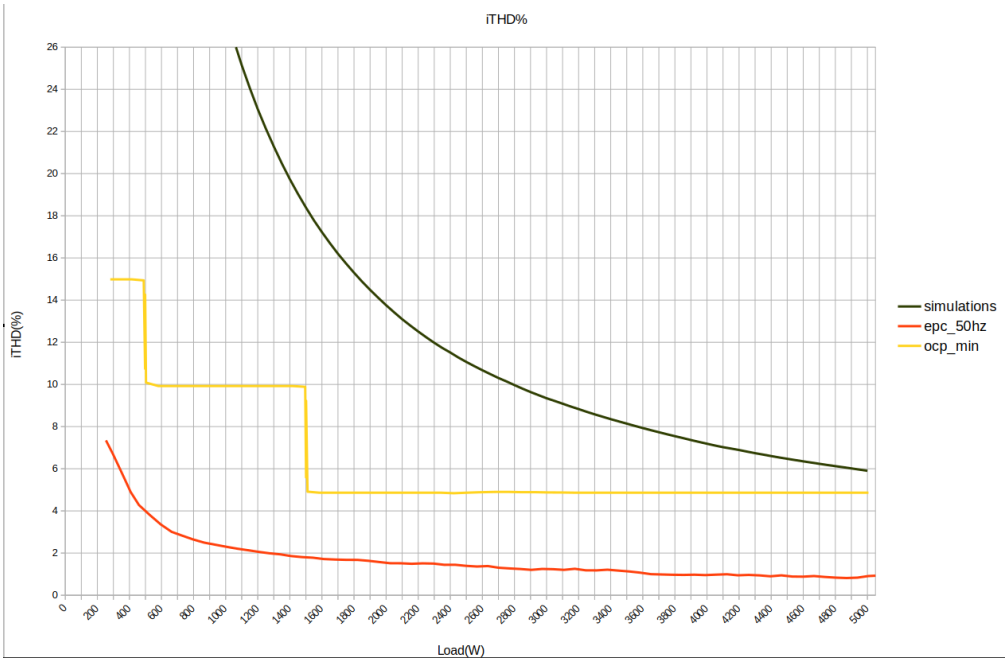

Figure 1.7: iTHD %

iTHD measures are very high due to the lack of any type of filtering from the input AC grid and should not be considered relevant without filtering.

List of Tables

List of Figures

1.1 SPICE simulation for Si Energy 3
1.2 PFC PLECS schematich 4
1.3 Losses summary 5
1.4 GaN losses detail 6
1.5 Si Losses detail 7
1.6 Capacitors losses detail 7
1.7 iTHD % 8