SPICE model of a “n” channel MOSFET transistor

1st Marius-Florin Staniloiu
Electrical Engineering Faculty as PHDstudent
Politehnica University of Bucharest
marius.staniloiu@yahoo.com

2nd Horatiu-Samir Popescu
Electrical Engineering Faculty as PHDstudent
Politehnica University of Bucharest
horatiupopescu76@gmail.com

3rd Mihai Iordache
Electrical Engineering Faculty
Politehnica University of Bucharest
mihai.iordache@upb.ro

***Abstract* — In this paper, starting from a new equivalent circuit of a real n-channel MOS-FET transistor realized based on principle of operation and considering the information from datasheet, a new SPICE model is created, where the drain-source resistance of the transistor varies with base-source voltage and with temperature. To verify the accuracy of the SPICE model, a comparison of the SPICE model of a n-channel MOS-FET with the behavior of the real MOS-FET and with the SPICE behavior of the MOS-FET proposed by the component manufacturer will be performed. Validation of the model is performed at a temperature of -40°C, 25°C and 125°C. The following parameters of the "n" channel MOS-FET transistor are validated: parasitic capacitance from the gate, ON time, RISE time, OFF time, FALL time, the drain-source loss current, drain-source breakdown voltage, gate-source breakdown voltage and drain-source resistance.**

Keywords—SPICE model, MOSFET transitor, the equivalent circuit for a real MOSFET transistor, worst case.

I. Introduction

The world's most used SPICE circuit simulators have a large library of electrical and electronic components, in addition, major electronic component manufacturers provide a SPICE model for their components. But from the simulations performed, these proposed SPICE models do not seem to be complete, as the simulators are focused on operating in the nominal area of the components. Another weak point observed in this study is the variation of component parameters with temperature. There are SPICE models that do not have parameter variation with temperature, or this variation is not like the variation tested or declared in the datasheets.

II. A proposed equivalent circuit for a real MOSFET transistor

In this chapter, starting from the equivalent circuit of a real n-channel MOS-FET transistor, a SPICE model is created in which the drain-source resistance of the transistor varies with the change in the base-source voltage and with the temperature of the ambient environment in which the transistor operates. Creating the SPICE model uses ideal current-controlled voltage sources, ideal components, and ideal voltage sources.

Fig. 1 represents the symbol of an "n" channel MOS-FET transistor.

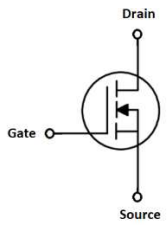

Fig. 1 The symbol of a MOSFET transistor [11].

Fig. 2 shows the transfer characteristic of an "n" channel MOS-FET transistor. This can be described by the equation:

$$I_D = f(U_{GS}),\ U_{DS} = constant \tag{1}$$

Below graphic shows that at a gate-source voltage of 0V, the drain current is zero. This current remains zero until a gate-source voltage greater than 2V (for most n-channel MOS-FETs). The gate-source voltage for which a drain current starts to appear is called the "threshold voltage". When this voltage is reached, the drain current can be described by the previous equation.

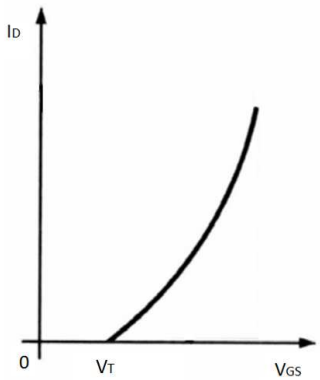

Fig. 2 Variation of gate-source voltage across an n-channel MOS-FET at a constant drain-source voltage [11].

Fig. 3 shows the output characteristic of a "n" channel MOS-FET transistor. This can be described by the equation:

$$I_D = f(V_{DS}),\ V_{GS} = constant \tag{2}$$

It can be observed the current-voltage characteristic of the "n" channel MOS-FET transistor, with two operating areas:
- Linear region, where it is observed that at low drain-source voltages (V_{DS}), the drain current varies linearly with the drain-source voltage (at a constant gate-source voltage (V_{GS})), the drain-source voltage V_{DS} is given by the equation:

$$V_{DS_sat} < V_{GS} - V_{PRAG} \tag{3}$$

This region represents the linear region of the 'n' channel MOS-FET and behaves as a voltage controlled linear resistor.

- Saturation region, as the drain-source voltage increases the drain current reaches a saturation value. Thus, the drain-source voltage reaches a value close to:

$$V_{DS_sat} = V_{GS} - V_{PRAG} \tag{4}$$

2023 10th International Conference on Modern Power Systems (MPS) | 979-8-3503-2682-6/23/$31.00 ©2023 IEEE | DOI: 10.1109/MPS58874.2023.10187532

979-8-3503-2682-6/23/$31.00 ©2023 IEEE

Authorized licensed use limited to: Universita Studi di Torino - Dipartimento Di Informatica. Downloaded on February 17,2026 at 12:49:22 UTC from IEEE Xplore. Restrictions apply.

It can be said that in the saturation zone:

$$V_{DS_sat} > V_{GS} - V_{PRAG} \quad (5)$$

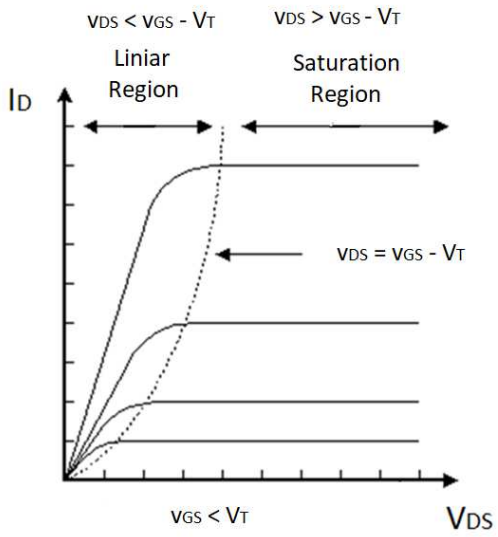

Fig. 3 Variation of drain-source voltage across a "n" channel MOS-FET transistor at a constant gate-source voltage [11].

III. The Variation of Parameters of a "n" Channel MOS-FET Transistor with Temperature

Fig. 4 shows the variation of the gate-source voltage of a "n" channel MOS-FET transistor depending on the working temperature [17]. The gate-source voltage (V_{GS}) variation is observed for a temperature variation between -50°C and 150°C. The graph shows that at an ambient temperature of -50°C the gate-source threshold voltage (V_{THRES}) varies between 2.2V and 2.7V depending on the drain current (I_D). At a temperature of 50°C the threshold voltage (V_{THRES}) gate-source varies between 1.7V and 2.4V depending on the drain current (I_D) and at a temperature of 150°C the threshold voltage (V_{THRES}) gate-source varies between 0.8V and 2V depending on the drain current (I_D). Thus, a variation of more than 50% of the threshold voltage is observed depending on the nominal value.

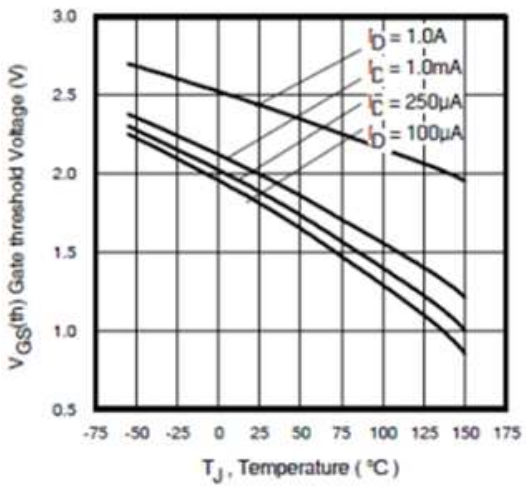

Fig. 4 Variation of gate-source voltage of an 'n' channel MOS-FET transistor with temperature [17].

Fig. 5 shows the percentage variation of the drain-source resistance of a "n" channel MOS-FET transistor depending on the working temperature [17]. The percentage variation of the drain-source resistance (R_{DS}) as a function of the working temperature is observed. Consider a transistor with a nominal drain-source resistance of 10mΩ. Thus, it is observed that at a temperature of -25°C the drain-source resistance has a value of approximately 7.5mΩ (RDS=7.5mΩ), at a temperature of 60°C it has a resistance of 13mΩ (RDS=13mΩ) and at a temperature of 150°C has a resistance of 23mΩ (RDS=23mΩ). Thus, a variation of over 100% of the threshold voltage is observed depending on the nominal value.

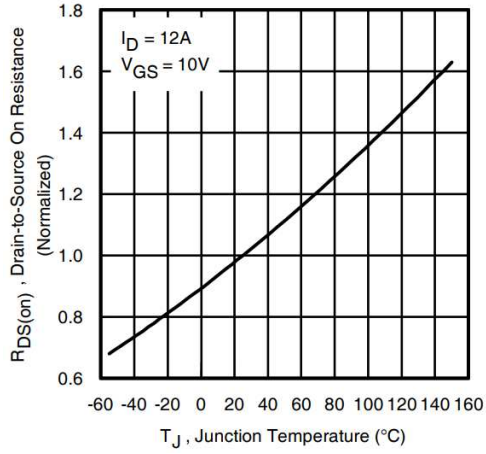

Fig. 5 Percentage Variation of Drain-Source Resistance of a 'n' Channel MOS-FET Transistor with Temperature [17].

Fig. 6 shows the variation of the drain-source resistance (R_{DS}) of a "n" channel MOS-FET transistor as a function of the gate-source voltage (V_{GS}) [17]. Consider a transistor with a nominal drain-source resistance of 10mΩ. Thus, it is observed that at a gate-source voltage of up to 3V we have a high value of the drain-source resistance (most likely of the order of ohms), this value is far outside the normal operating regime of the transistor (where, RDS=10mΩ) this being the reason why the value is not declared. It is observed that at a gate-source voltage of approximately 4V the drain-source resistance has a value of 20mΩ (a value much closer to the nominal one), respectively at a voltage of approximately 8V the value of the drain-source resistance is 10mΩ.

Authorized licensed use limited to: Universita Studi di Torino - Dipartimento Di Informatica. Downloaded on February 17,2026 at 12:49:22 UTC from IEEE Xplore. Restrictions apply.

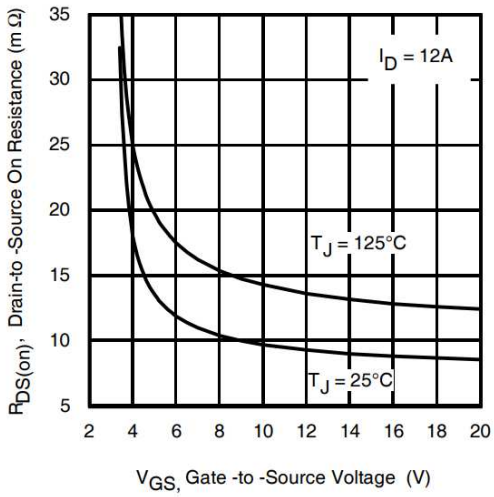

Fig. 6 Variation of drain-source resistance (R_{DS}) of an n-channel MOS-FET as a function of variation of gate-source voltage (V_{GS}) [17].

IV. THE EQUIVALENT CIRCUIT OF A REAL N-CHANNEL MOS-FET TRANSISTOR

Considering these operating areas, the variation of parameters with temperature and that the n-channel MOS-FET is not ideal, Fig. 7 shows the model of a real n-channel MOS-FET (a new model created). This circuit has the following components:

- $V_{GReverse}$ – ideal voltage source to achieve the threshold voltage
- R_G – parasitic resistor in the transistor gate
- R_{GS} – parasitic resistor between the gate and the source of the transistor
- DZ_{GS1}, DZ_{GS2}– ideal Zenner diodes between the gate and the source of the transistor
- C_{GS} – parasitic capacitor between gate and source of the transistor.
- C_{GD} – parasitic capacitor between gate and drain of the transistor.
- $R_{DS_leakage}$ – resistor to ensure leakage current between drain and source.
- $DZ_{Reverse}$ – Zener diode internal to the transistor.
- VDZ_{Direct} – ideal voltage source to ensure source-drain voltage.
- C_{SD} – parasitic capacitor between the drain and the source of the transistor.
- RDS – drain-source variable resistor.

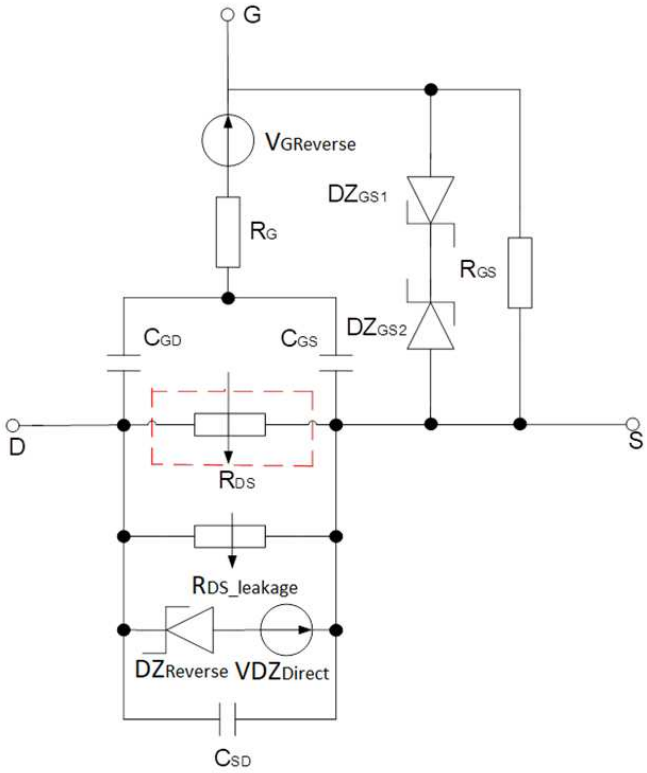

Fig. 7 The equivalent circuit of a real MOS-FET transistor (a new model created).

V. SPICE MODEL OF A REAL N-CHANNEL MOS-FET TRANSISTOR

Considering the model of the real n-channel MOS-FET, a SPICE model of the real n-channel MOS-FET is created whose drain-source resistance varies with the value of the drain-source voltage, the value of the voltage of the gate, the value of the drain current and the variation of these parameters with the temperature of the transistor, is considered (Fig. 8).

In Fig 8, X1 and X2 are voltage-controlled variable resistors, using the SPICE source property to vary the resistance according to an integrated expression:

$$X_1 = KR_{DS} \tag{6}$$

$$X_2 = KTI_{DS} \tag{7}$$

In this expression there are the following parameters: K and KT represent the variation of the drain-source resistance depending on the drain-source voltage and the temperature of the transistor respectively the variation of the drain-source loss current depending on the temperature of the transistor. R_{DS} represents the nominal drain-source resistance and I_{DS} represents the nominal leakage current.

E_1 is a controlled voltage source, the output value depends on the drain-source resistance variation as a function of the gate-source voltage variation and temperature variation.

$$E_1 = KV_{GS} \times \%KV_{Temp} \tag{8}$$

E_2 is a controlled voltage source, the output value depends on the drain-source current variation and the temperature variation.

Authorized licensed use limited to: Universita Studi di Torino - Dipartimento Di Informatica. Downloaded on February 17,2026 at 12:49:22 UTC from IEEE Xplore. Restrictions apply.

$$E_2 = KI_{DS} \times \%KV_{Temp} \quad (9)$$

KV_{GS} represents the percentage variation of drain-source resistance with variation of gate-source voltage. KV_{Temp} represents the percentage variation of drain-source resistance with temperature variation. KI_{DS} represents the percentage variation of drain-source leakage current with temperature variation.

E_3 is a controlled voltage source, whose output value depends on the variation of the drain-source resistance declared by the component manufacturer with the variation of the gate-source voltage.

$$E_3 = TAB_V_{GS} \rightarrow f(V_{GS}) \quad (10)$$

E_4 is a controlled voltage source, whose output value depends on the variation of the drain-source resistance declared by the component manufacturer with temperature variation (V_1).

$$E_4 = TAB_{Temp} \rightarrow f(V_{Temp}) \quad (11)$$

F_1 is a controlled current source, whose output value depends on the percentage variation of the drain-source loss current with temperature variation (V_1).

$$F_1 = TAB_{Curent} \rightarrow f(I_{DS}) \quad (12)$$

V_T – ideal voltage source to achieve the threshold voltage.

R_G – parasitic resistor in the transistor gate.
R_{GS} – parasitic resistor between the gate and the source of the transistor
DZ_{GS1}, DZ_{GS2}– Zenner diodes between the gate and the source of the transistor.
C_{GS} – parasitic capacitor between the gate and the source of the transistor.
C_{GD} – parasitic capacitor between the gate and the drain of the transistor.

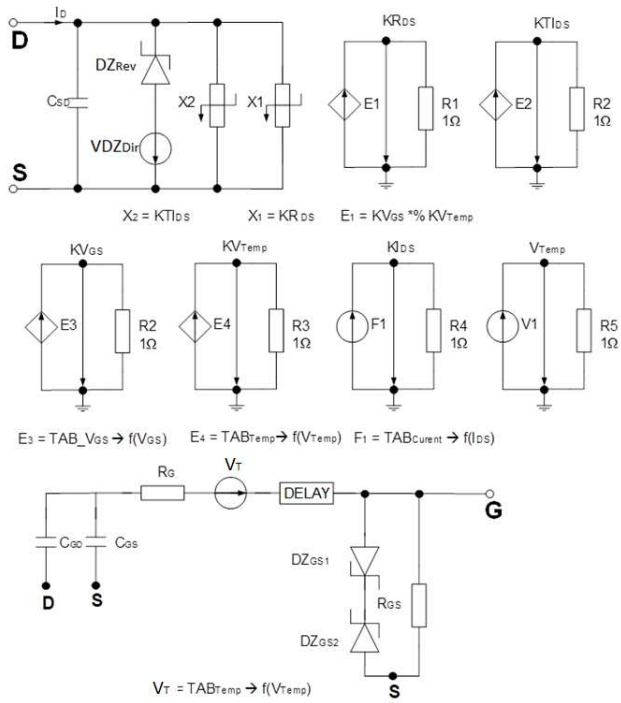

Fig. 8 SPICE model of a “n” channel MOSFET transistor.

VI. Extracting parameters from datasheet for a "n" channel MOS-FET transistor

To verify the correctness of the SPICE model, the necessary parameters for the SPICE model of a "n" channel MOSFET transistor (proposed model in Fig. 8) are extracted. A "n" channel MOSFET (IRFH3707) will be used. It starts with extracting the parameters from the datasheet that are used in the SPICE model in Fig. 8.

A. Drain-source resistance (R_{DS}) as a function of temperature

TABLE I. Percentage variation of drain-source resistance (R_{DS}) of a “N” channel MOS-FET transistor with temperature

The temperature applied to the transistor [C]	Percentage drain-source resistance value [%]	The value of the drain-source resistance, nominal=9.4mΩ [mΩ]
-60	70%	6.58
-40	75%	7.05
-20	80%	7.52
0	90%	8.46
20	100%	9.4
40	108%	10.152
60	115%	10.81
80	125%	11.75
100	135%	12.69
120	145%	13.63
140	155%	14.57
160	165%	15.51

B. Drain-source resistance (R_{DS}) as a function of gate-source voltage (V_{GS})

TABLE II. The value of the drain-source resistance (R_{DS}) of a n-channel MOS-FET as a function of the gate-source voltage (V_{GS})

Gate-source voltage [V]	The value of the drain-source resistance [mΩ]
-20	inf
0	inf
2	inf
3.5	35
3.8	28
4	20
4.5	15
5	13
5.5	12
6	11.5
7	10.5
8	10.2
9	10
10	9.5
12	9
14	8.5
16	8.35
18	8.2
20	8

C. Gate-source voltage (V_{GS}) as a function of temperature

Authorized licensed use limited to: Universita Studi di Torino - Dipartimento Di Informatica. Downloaded on February 17,2026 at 12:49:22 UTC from IEEE Xplore. Restrictions apply.

TABLE III. GATE-SOURCE VOLTAGE (V_{GS}) OF A N-CHANNEL MOS-FET VERSUS TEMPERATURE

The temperature applied to the transistor [C]	Gate-source voltage value [V]
-60	2.8
-40	2.6
-20	2.55
0	2.5
20	2.45
40	2.4
60	2.3
80	2.2
100	2.1
120	2
140	1.98
160	1.95

D. Thereshould voltage

$$V_T = 1.35 \ldots 1.8 \ldots 2.35\ V$$

E. Drain-source breakdown voltage

$$V_{Breakdown_DS} = 30V$$

F. Gate-source breakdown voltage

$$V_{Breakdown_GS} = 20V$$

G. Reverse voltage (source-drain)

$$V_{SD} = 1V$$

H. Gate resistance

$$R_G = 2\Omega$$

I. Input capacitance

$$C_{ISS} = C_{GS} + C_{GD} = 755pF$$
$$C_{GD} = 100pF$$

J. Output capacity

$$C_{OSS} = C_{DS} + C_{GD} = 171pF$$

K. "ON" delay time

$$t_{d_ON} = 9nF$$

L. "OFF" delay time

$$t_{d_ON} = 9.9nF$$

M. Rise time to "ON"

$$t_r = 11nF$$

N. Fall time to "OFF"

$$t_f = 5.6nF$$

VII. COMPARISON OF THE PROPOSED SPICE MODEL OF A N-CHANNEL MOS-FET WITH A STANDARD LIBRARY TRANSISTOR AND A REAL TRANSISTOR AT 25°C AND AN OPERATING AGE OF LESS THAN 10 HOURS

To verify the accuracy of the SPICE model, a comparison of the SPICE model of a n-channel MOS-FET with the behavior of the real MOS-FET and with the SPICE behavior of the MOS-FET proposed by the component manufacturer will be made.

A. SPICE model validation

Fig. 9 represents the circuit diagram of a n-channel MOS-FET transistor that has been practically realized. The voltage drops across V_Drain_Real and V_Gate_Real were measured using an oscilloscope (Tektronix Model DPO 5104B). The waveforms were saved in .CSV format for later use in SPICE. In Fig. 9 V1 is a voltage source (TDK-Lambda voltage source). Xreal is a "n" channel MOS-FET transistor (IRFH3707). R1, R2, R3 are resistors having various electrical resistance values (these resistors change depending on the application, the electrical resistance values will be presented next). V2 is a voltage source (TDK-Lambda voltage source).

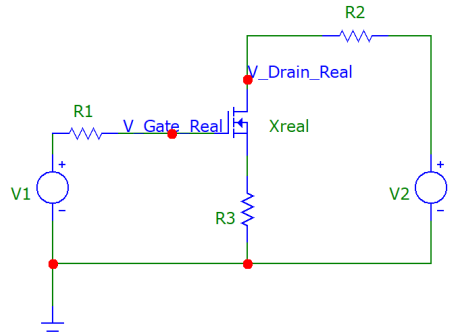

Fig. 9 Practically made circuit for the study of the "n" channel MOS-FET transistor (IRFH3707).

Fig. 10 shows an operation circuit of a n-channel MOS-FET transistor modeled in SPICE, a n-channel MOS-FET transistor from the SPICE library and the results of a practically studied transistor (IRFH3707). V1 is a voltage source (depending on the studied parameter of the MOS-FET transistor it can be step, pulse, sinusoidal). V2 DC voltage source. X1 is an IRFH3707 MOS-FET transistor from the SPICE library, a model proposed by the component manufacturer. Xmade is a real MOS-FET transistor modeled in SPICE. U1, U2 are user sources from the SPICE library that allow loading the voltage waveform in USR format. R1, R2, R3, R4, R5, R6, R7 R8 are ideal resistors from the SPICE library.

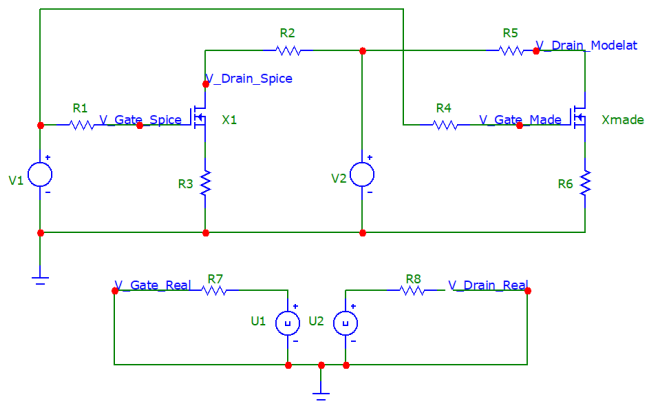

Fig. 10 Circuit made in SPICE for studying n-channel MOS-FET transistor (IRFH3707) (Made, SPICE, Real).

B. Validation of the SPICE model – capacitance from the gate (drain in "air")

Using the circuit form Fig. 9, the gate-source capacity of a real MOS-FET transistor (IRFH3707) is studied, under the following conditions:

Authorized licensed use limited to: Universita Studi di Torino - Dipartimento Di Informatica. Downloaded on February 17,2026 at 12:49:22 UTC from IEEE Xplore. Restrictions apply.

- The drain is in "air", R2 does not exist in the circuit.
- The resistance value of resistor R1 is 100Ω.
- The resistance value of resistor R3 is zero Ω.
- V1 is a pulse type voltage source (V1=0V, V2=5V, TD=50ns, Tr=0ns, Tf=0ns, PW=800ns, PER=2000ns)
- V2 is a 10V DC voltage source
- Xreal is a MOS-FET transistor (IRFH3707)
- The voltage at point V_Gate_Real was measured using an oscilloscope (Model Tektronix DPO 5104B). The waveform was saved in .CSV format for later use in SPICE.

Using the circuit from Fig. 10, the gate-source capacitance of a real MOS-FET transistor (IRFH3707) is studied in comparison with a transistor from the SPICE library and a transistor modeled in SPICE under the following conditions:
- The drain of transistor X1 and transistor Xmade are in "air", R2 and R5 do not exist in the circuit.
- The resistance value of resistors R1 and R4 is 100Ω.
- The resistance value of resistors R3 and R6 is zero Ω.
- V1 is a pulse type voltage source from the SPICE library (V1=0V, V2=5V, TD=50ns, Tr=0ns, Tf=0ns, PW=800ns, PER=2000ns).
- V2 is a 10V DC voltage source.
- U1 is a user source from the SPICE library that allows loading the voltage waveform in .USR format (the voltage acquired with an oscilloscope (Tektronix Model DPO 5104B), with which the gate-source voltage was measured on a real transistor).

After simulating the circuit in Fig. 10 using SPICE, the graph in figure 11 was obtained.

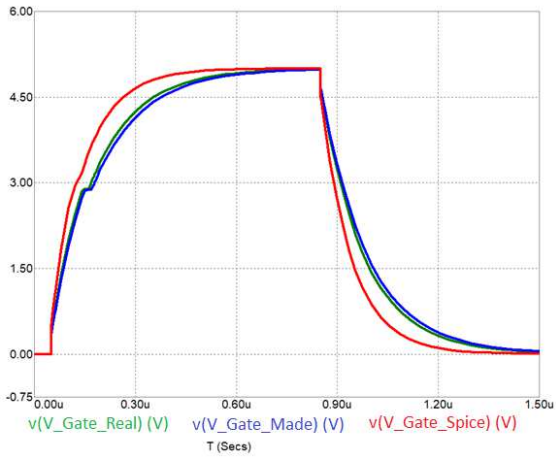

Fig. 11 Gate-source voltage of a real MOS-FET compared to a SPICE-modeled MOS-FET and a SPICE model.

C. *SPICE model validation – ON time, RISE time, OFF time, FALL time*

Using the circuit in Fig. 9, the ON and OFF times of a real MOS-FET transistor (IRFH3707) are studied, under the following conditions (imposed in the catalog datasheet):
- The drain voltage is 15V.
- The drain current is 9.4A.
- Gate-source voltage is 4.5V.
- Gate resistance is 1.3Ω.

The nominal results according to the datasheet are:
- Nominal "ON" time is 9.0ns.
- The nominal "RISE" time is 11ns.
- The nominal "OFF" time is 9.9ns.
- The nominal "FALL" time is 5.6ns.

Thus, in the circuit in Fig. 9 we have:
- The resistance value of resistor R2 is 1.5957Ω (VD/ID=15V/9.4A=1.5957 Ω)
- The resistance value of resistor R1 is 1.3Ω.
- The resistance value of resistor R3 is zero Ω.
- V1 is a pulse type voltage source (V1=0V, V2=4.5V, TD=50ns, Tr=0ns, Tf=0ns, PW=800ns, PER=2000ns).
- V2 is a 15V DC voltage source.
- Xreal is a MOS-FET transistor (IRFH3707).
- The voltage at the V_Gate_Real point was measured using an oscilloscope (Tektronix DPO 5104B Model). The waveform was saved in .CSV format for later use in SPICE.

Using the circuit in Fig. 10, the gate-source capacitance of a real MOS-FET transistor (IRFH3707) is studied in comparison with a transistor from the SPICE library and a transistor modeled in SPICE under the following conditions:
- The resistance value of resistors R2 and R5 is 1.5957Ω (VD/ID).
- The resistance value of resistors R1 and R4 is 1.3Ω.
- The resistance value of resistors R3 and R6 is zero Ω.
- V1 is a pulse type voltage source from the SPICE library (V1=0V, V2=4.5V, TD=50ns, Tr=0ns, Tf=0ns, PW=800ns, PER=2000ns)
- U1 is a user source from the SPICE library that allows loading the voltage waveform in .USR format (the voltage acquired with an oscilloscope (Tektronix Model DPO 5104B), with which the gate-source voltage was measured on a real transistor).

After simulating the circuit in Fig. 10 using SPICE, the graph in Fig. 12 was obtained for the time of "ON" and that of "RICE".

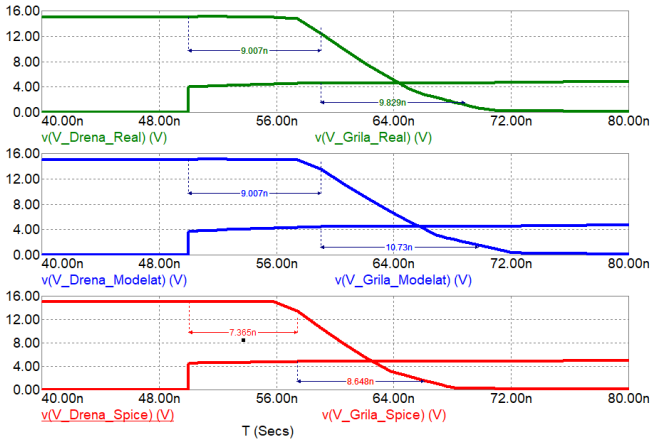

Fig. 12 Gate-source and drain-source voltage of a real MOS-FET compared to a SPICE modeled MOS-FET and a SPICE MOS-FET transistor to measure "ON" time and "RISE" time.

The red graph indicates the gate-source and drain-source voltage of the SPICE transistor, the blue graph indicates the gate-source and drain-source voltage of the modeled transistor in SPICE, and the green graph indicates the gate-source and drain-source voltage of the real transistor (measured with the oscilloscope).

The ON time for the real and the modeled transistor is approximately 9ns (in the datasheet this time is 9ns) and for the transistor in the SPICE library this time is approximately 7.4ns. Also, the RISE time for the real transistor is around 10ns and for the modeled one is around 10.7ns (in the datasheet this time is 11ns) and for the transistor in the SPICE library this time is about 8.6ns.

Authorized licensed use limited to: Universita Studi di Torino - Dipartimento Di Informatica. Downloaded on February 17,2026 at 12:49:22 UTC from IEEE Xplore. Restrictions apply.

After simulating the circuit in Fig. 10 using SPICE, the graph in Fig 13 was obtained for "OFF" and "FALL" time.

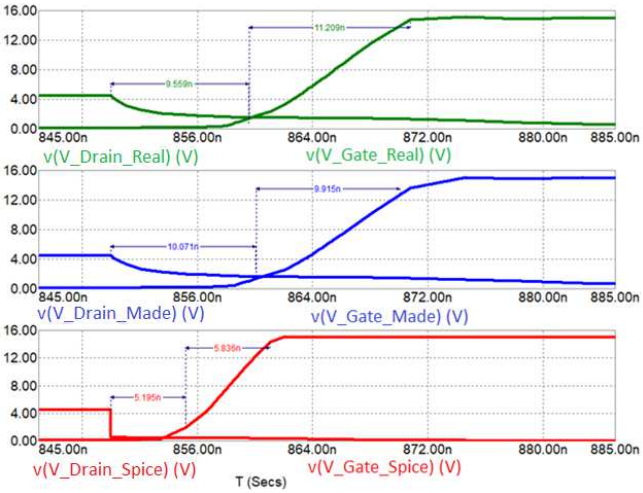

Fig. 13 Gate-source and drain-source voltage of a real MOS-FET compared to a SPICE-modeled MOS-FET and a SPICE MOS-FET to measure "OFF" time and "FALL" time.

The red graph indicates the gate-source and drain-source voltage of the SPICE transistor, the blue graph indicates the gate-source and drain-source voltage of the modeled transistor in SPICE, and the green graph indicates the gate-source voltage and drain-source of the real transistor (measured with the oscilloscope). The OFF time for the real transistor is about 9.5ns and for the modeled one it is around 10ns (in the datasheet this time is 9.9ns) and for the transistor in the SPICE library this time is around 5.2ns. Also, the RISE time for the real transistor is around 11ns and for the modeled one it is around 9.9ns (in the datasheet this time is 5.6ns) and for the transistor in the SPICE library this time is about 5.8ns.

D. SPICE model validation – drain-source leakage current

Using the circuit in Fig. 9, the drain-source leakage current of a real MOS-FET transistor (IRFH3707) is studied, under the following conditions (imposed in the datasheet):
- The voltage in the drain is 24V.
- Gate-source voltage is 0V.
- Gate resistance is 1.3Ω.

Thus, in the circuit in Fig. 10 we have:
- The resistance value of resistor R2 is 10Ω.
- The gate is in "air", R1 does not exist in the circuit.
- The resistance value of resistor R3 is zero Ω.
- V2 is a 24V DC voltage source.
- Xreal is a MOS-FET transistor (IRFH3707).
- The current through resistor R2 was measured using an oscilloscope (Tektronix DPO 5104B Model). The waveform was saved in .CSV format for later use in SPICE.

Using the circuit in Fig. 10, the drain-source leakage current of a real MOS-FET transistor (IRFH3707) is studied in comparison with a transistor from the SPICE library and a transistor modeled in SPICE under the following conditions:
- The resistance value of resistors R2 and R5 is 10Ω.
- The resistance value of resistors R1 and R4 is 1.3Ω.
- The gates of the transistors are in "air", R1 and R4 do not exist in the circuit
- The resistance value of resistors R3 and R6 is zero Ω.
- U2 is a user source from the SPICE library that allows loading the voltage waveform in .USR format (the voltage acquired with an oscilloscope (Tektronix Model DPO 5104B), with which the gate-source voltage was measured on a real transistor). After simulating the circuit in Fig. 10 using SPICE, the graph in Fig. 14 was obtained.

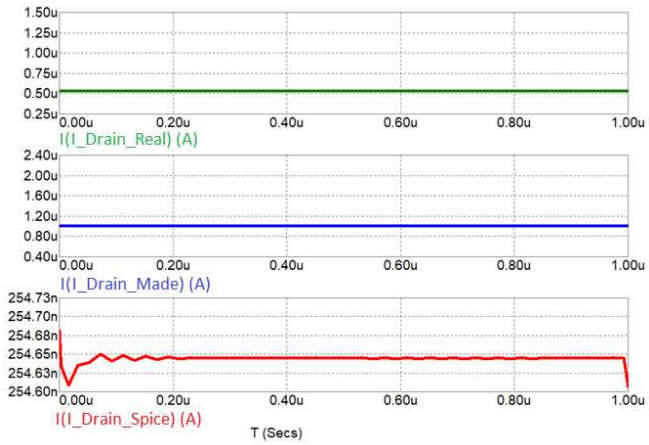

Fig. 14 Drain-source leakage current of a real MOS-FET compared to a SPICE modeled MOS-FET and a SPICE MOS-FET transistor.

The red graph indicates the drain-source current of the SPICE transistor, the blue graph indicates the drain-source current of the transistor modeled in SPICE and the green graph indicates the drain-source current of the real transistor (measured with the oscilloscope). The value of the drain current for a real transistor is around 550nA, that of the SPICE library transistor is 254nA, and that of the modeled SPICE transistor is 1µA (value also found in the component datasheet). Comparing the three values, the real transistor modeled in SPICE represents the worst case. This helps in calculating the maximum leakage current in a complex electronic circuit.

The practical experiment is repeated at a temperature of 125°. With these new values obtained, the circuit in Fig. 10 is simulated considering an operation of the circuit at a temperature of 125°C, using the SPICE simulation, the graph in Fig. 15 was obtained.

The red graph indicates the drain-source current of the SPICE transistor, the blue graph indicates the drain-source current of the transistor modeled in SPICE and the green graph indicates the drain-source current of the real transistor (measured with the oscilloscope). The value of the drain current for a real transistor is around 70µA, that of the transistor in the SPICE library is 3µA and that of the modeled SPICE transistor is 150µA (value also found in the component datasheet). Comparing the three values, the real transistor modeled in SPICE represents the worst case. It helps to calculate the maximum loss current in a complex scheme.

Authorized licensed use limited to: Universita Studi di Torino - Dipartimento Di Informatica. Downloaded on February 17,2026 at 12:49:22 UTC from IEEE Xplore. Restrictions apply.

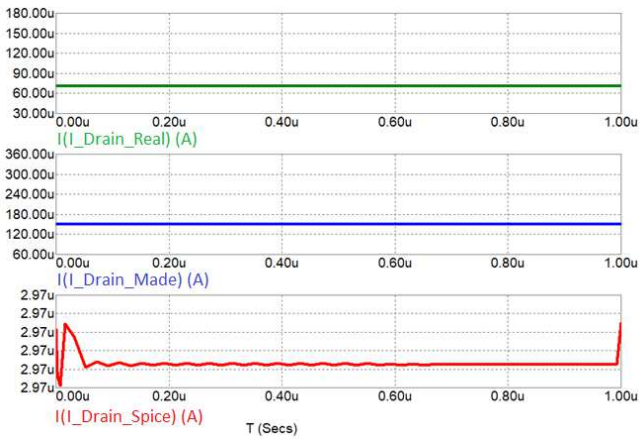

Fig. 15 Drain-source leakage current of a real MOS-FET compared to a SPICE-modeled MOS-FET and a SPICE MOS-FET at 125°C.

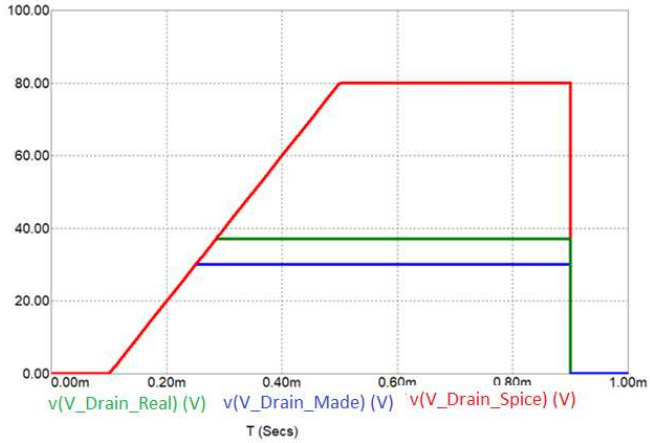

Fig. 16 Drain-source breakdown voltage of a real MOS-FET compared to a SPICE-modeled MOS-FET and a SPICE MOS-FET transistor.

E. SPICE model validation – drain-source breakdown voltage

Using the circuit in Fig. 9 the drain-source breakdown voltage of a real MOS-FET transistor (IRFH3707) is studied, under the following conditions (imposed in the datasheet):

- Drain-source voltage higher than 30V.
- The drain resistance is 120kΩ (ID=120µA for a drain-source voltage of 30V).

Thus, in the circuit in Fig. 9 we have:

- The resistance value of resistor R2 is 120kΩ.
- The gate is in "air", R1 does not exist in the circuit.
- The resistance value of resistor R3 is zero Ω.
- V2 is a step-type DC voltage source from 0V to 80V (V1=0V, V2=80V, TD=100u, TR=400u, TF=0, PW==500u, PER=1m).
- Xreal is a MOS-FET transistor (IRFH3707).
- The voltage at the V_Drain_Real point was measured using an oscilloscope (Tektronix DPO 5104B Model). The waveform was saved in .CSV format for later use in SPICE.

Using the circuit in Fig.10, the breakdown voltage of a real MOS-FET transistor (IRFH3707) is studied in comparison with a transistor from the SPICE library and a transistor modeled in SPICE under the following conditions:

- The resistance value of resistors R2 and R5 is 120kΩ.
- Gate is in "air", R1 and R4 are in circuit.
- The resistance value of resistors R3 and R6 is zero Ω.
- V1 is a pulse-type voltage source from the SPICE library (V1=0V, V2=80V, TD=100u, TR=400u, TF=0, PW==500u, PER=1m).
- U1 is a user source from the SPICE library that allows loading the voltage waveform in .USR format (voltage acquired with an oscilloscope (Tektronix Model DPO 5104B), with which the gate-source voltage was measured on a real transistor).

After simulating the circuit in Fig.10 using SPICE, the graph in Fig.16 was obtained for the drain-source breakdown voltage.

The red graph indicates the drain-source voltage of the SPICE transistor, the blue graph indicates the drain-source voltage of the transistor modeled in SPICE and the green graph indicates the drain-source voltage of the real transistor (measured with the oscilloscope). When applying a ramp voltage (with an increase from 0V to 80V) in the drain of the transistors, it can be observed that the real transistor cuts the voltage around 37V, the modeled one at 30V (value specified in the datasheet) and the transistor in the SPICE library does not cut this voltage until reaching maximum values (80V). A higher voltage (up to 1000V) was also studied on the transistor in the SPICE library and the result is the same.

F. SPICE model validation – gate-source breakdown voltage

Using the circuit in Fig. 9, the gate-source breakdown voltage of a real MOS-FET transistor (IRFH3707) is studied, under the following conditions (imposed in the datasheet):

- Gate-source voltage greater than 20V.

Thus, in the circuit in Fig.9 we have:

- The drain is in "air", R2 does not exist in the circuit.
- The resistance value of resistor R1 is 1.3Ω.
- The resistance value of resistor R3 is zero Ω.
- V1 is a pulse type continuous voltage source from 0V to 80V (V1=0V, V1=80V, TD=100u, TR=400u, TF=0, PW==500u, PER=1m).
- Xreal is a MOS-FET transistor (IRFH3707).
- The voltage at the V_Gate_Real point was measured using an oscilloscope (Tektronix DPO 5104B model). The waveform was saved in .CSV format for later use in SPICE.

Using the circuit in Fig. 10, the breakdown voltage of a real MOS-FET transistor (IRFH3707) is studied in comparison with a transistor from the SPICE library and a transistor modeled in SPICE under the following conditions:

- The drain is in "air", R2 and R5 do not exist in the circuit.
- The resistance value of resistors R1 and R4 is 1.3 Ω.
- The resistance value of resistors R3 and R6 is zero Ω.
- V1 is a pulse-type voltage source from the SPICE library (V1=0V, V2=80V, TD=100u, TR=400u, TF=0, PW==500u, PER=1m).
- U1 is a user source from the SPICE library that allows loading the voltage waveform in .USR format (voltage

Authorized licensed use limited to: Universita Studi di Torino - Dipartimento Di Informatica. Downloaded on February 17,2026 at 12:49:22 UTC from IEEE Xplore. Restrictions apply.

acquired with an oscilloscope (Tektronix Model DPO 5104B), with which the gate-source voltage was measured on a real transistor).
After simulating the circuit in Fig. 10 using SPICE, the graph in Fig. 17 was obtained for the gate-source breakdown voltage.

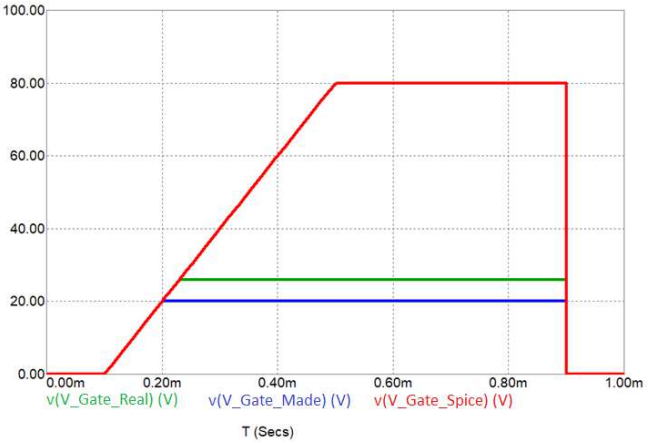

Fig. 17 Gate-source breakdown voltage of a real MOS-FET compared to a SPICE-modeled MOS-FET and a SPICE MOS-FET transistor.

The red graph indicates the gate-source voltage of the SPICE transistor, the blue graph indicates the gate-source voltage of the modeled transistor in SPICE, and the green graph indicates the gate-source voltage of the real transistor (measured with the oscilloscope).
When applying a pulse voltage (with an increase from 0V to 80V) in the transistor gate, it can be observed that the real transistor cuts the voltage around 26V, the modeled one at 20V (value specified in the catalog data) and the transistor in the SPICE library does not cut this voltage until reaching maximum values (80V). Also, was studied a higher voltage (up to 1000V) on the transistor in the SPICE library and the result is the same.

G. SPICE model validation – drain-source resistance (25°C, -40°C, 125°C)

Ambient temperature 25°C
Using the circuit in Fig. 9, was studied the variation of the drain-source resistance of a real MOS-FET transistor (IRFH3707) depending on the variation of the gate-source voltage and the ambient temperature, under the following conditions (imposed in the datasheet):
- The drain current is 12A (ID=12A).
- The ambient temperature is 25°C.

Thus, in the circuit in Fig .9 we have:
- The resistance value of resistor R2 is 1Ω
- The resistance value of resistor R1 is 1.3Ω
- The resistance value of resistor R3 is zero Ω.
- V1 is a continuous voltage source (V1=0V to 10V)
- V2 is a continuous voltage source (V2=12V)
- Xreal is a MOS-FET transistor (IRFH3707)
- The voltage at the V_Gate_Real point was measured using an oscilloscope (Tektronix DPO 5104B model). The waveform was saved in .CSV format for later use in SPICE.
- The ambient temperature is 25°C (the circuit is inserted in a climatic chamber)

Measure and save (in .CSV format) the voltage at point V_Gate_Real at a variation of the gate voltage from 0V to 10V with a step of one volt.
Using the circuit in Fig. 10 the variation of the drain-source resistance of a real MOS-FET transistor (IRFH3707) is studied in comparison with a transistor from the SPICE library and a transistor modeled in SPICE under the following conditions:
- The resistance value of resistors R2 and R5 is 1Ω.
- The resistance value of resistors R1 and R4 is 1.3 Ω.
- The resistance value of resistors R3 and R6 is zero Ω.
- V1 is a continuous voltage source (V1=0V->10V)
- V2 is a continuous voltage source (V2=12V)
- U1 is a user source from the SPICE library that allows loading the voltage waveform in .USR format (the voltage acquired with an oscilloscope (Tektronix Model DPO 5104B), with which the gate-source voltage was measured on a real transistor).
After simulating the circuit in Fig. 10 using the "Transient" and "Stepping" functions of SPICE, the graph in Fig. 18 was obtained for the drain-source resistance variation.
Fig. 18 uses a scale from 0mΩ to 30mΩ on the "Y" axis to display most drain-source resistances. For the real transistor and for the modeled one, a great closeness of the drain-source resistance values is observed, in addition, there are several values of the drain-source resistance below 2mΩ. For the transistor in the SPICE library, the drain-source resistance variation is between 12mΩ and 17mΩ (the nominal value declared in the catalog data is 9.4mΩ).

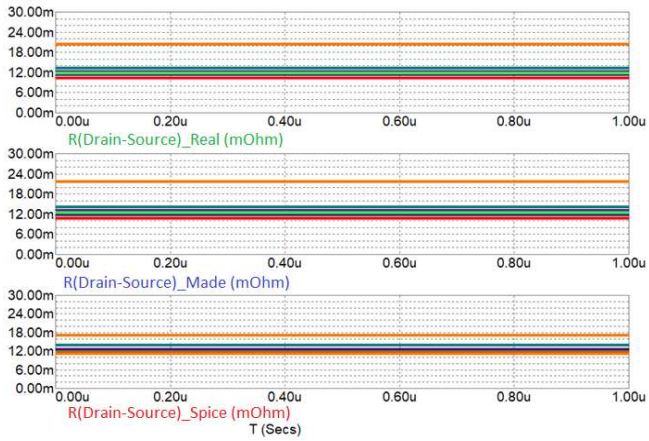

Fig. 18 Variation of drain-source resistance of a real MOS-FET compared to a SPICE-modeled MOS-FET and a SPICE MOS-FET transistor as a function of gate-source voltage (ambient temperature is 25°C).

Ambient temperature -40°C
Respecting the conditions of "**ambient temperature 25°C**" but with an ambient temperature of -40°C, new values for the drain-source resistance are obtained, they are shown in Fig. 19. The practical circuit is placed in a climate chamber at a temperature of -40°C and the circuit simulated in SPICE at a temperature of -40°C is considered.

Authorized licensed use limited to: Universita Studi di Torino - Dipartimento Di Informatica. Downloaded on February 17,2026 at 12:49:22 UTC from IEEE Xplore. Restrictions apply.

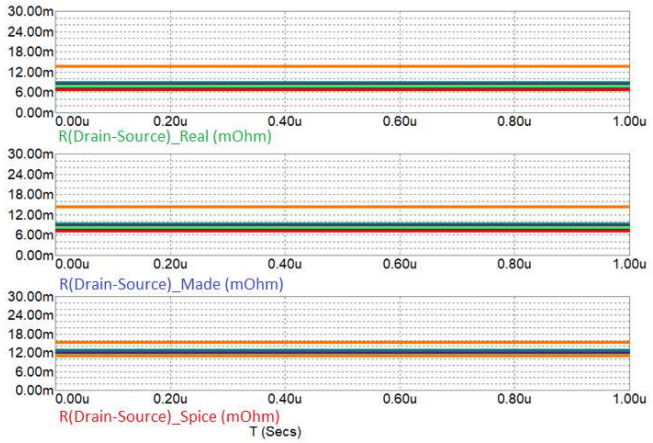

Fig. 19 Variation of drain-source resistance of a real MOS-FET compared to a SPICE-modeled MOS-FET and a SPICE MOS-FET transistor as a function of gate-source voltage (ambient temperature is -40°C).

Ambient temperature +125°C

Respecting the conditions of "**ambient temperature 25°C**" but with an ambient temperature of 125°C, new values for the drain-source resistance are obtained, they are shown in Fig. 20. The practical circuit is placed in a climate chamber at a temperature of 125°C and the circuit simulated in SPICE at a temperature of 125°C is considered.

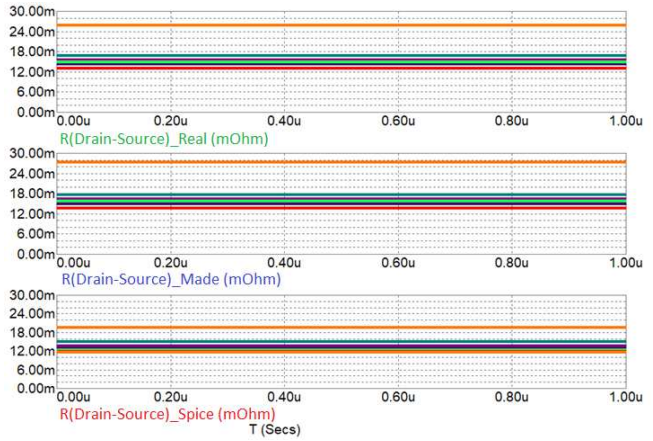

Fig. 20 Variation of drain-source resistance of a real MOS-FET compared to a SPICE-modeled MOS-FET and a SPICE MOS-FET transistor as a function of gate-source voltage (ambient temperature is +125°C).

VIII. Conclusions

Starting from the principle of operation of a "n" channel MOS-FET transistor and considering information from the catalog data [17] of a MOS-FET transistor, a new equivalent model of a real MOS-FET transistor was created. Based on this model, a new SPICE model is created that contains all the parameters of the real MOS-FET transistor model as well as their variation with the variation of the current through the transistor and with the temperature of the transistor. The accuracy of the created SPICE model is done by comparing it to the behavior of the actual MOS-FET transistor and to the transistor behavior in the SPICE library for various circuits. Following the tests, the following conclusions can be observed:

-The gate-source voltage shape of the created SPICE model is very close to the real transistor voltage shape and represents a worse case. The transistor in the SPICE library having a grid-source voltage with a more ideal ramp.

-The "ON" time of the real transistor and the one modeled in SPICE is about 9ns (same as in the catalog data) and for the transistor in the SPICE library this time is about 7.4ns.

o The OFF time for the real transistor is about 9.5ns and for the modeled one it is about 10ns (in the catalog data this time is 9.9ns) and for the transistor in the SPICE library this time is about 5.2ns.

-The value of the drain-source leakage current at a temperature of 25°C for a real transistor is about 550nA, the transistor in the SPICE library is 254nA and the transistor modeled in SPICE is 1µA (value also found in the component catalog data). The transistor created in SPICE represents the worst case. This helps in calculating the maximum leakage current in a complex scheme.

-The value of the drain-source leakage current at a temperature of 125°C for a real transistor is about 70µA, the SPICE library transistor is around 3µA, and the transistor modeled in SPICE is 150µA (value also found in catalog data of the component). The transistor created in SPICE represents the worst case. This model helps to calculate the maximum leakage current in a complex circuit.

-The drain-source breakdown voltage of a real transistor is around 37V, the one created in SPICE is 30V (value specified in the catalog data) and the transistor in the SPICE library is infinite. In this situation, we cannot see in the simulated circuit a potential overvoltage that could affect the circuit.

-The grid-source breakdown voltage of a real transistor is around 26V, the one created in SPICE is 20V (value specified in the catalog data) and the transistor in the SPICE library is infinite. In this situation we cannot see in the simulated circuit a possible overvoltage that could affect the circuit.

-When testing the grid-source resistance variation, a clustering of the transistor resistance values from the SPICE library is observed regardless of the applied grid-source voltage and the ambient temperature. Noting that the smallest transistor resistance value in the SPICE library is greater than the nominal value declared in the catalog data. That's assuming a large simulation error using this SPICE model. For the model created in SPICE and the real transistor, a large variation of drain-source resistance with grid-source voltage and temperature is observed. And in this case, we can state that the SPICE model created reflects the operation of the MOS-FET transistor better than the model available in the SPICE library.

The advantage of this newly created SPICE model is that it more accurately respects the operation of the MOS-FET transistor in real circuits than the existing SPICE model. Additionally, this model can be easily modified depending on the catalog data of the studied component.

A disadvantage of the proposed method is that it requires additional time for checking the parameters from the catalog data and entering them into the proposed SPICE model, but the result is much more accurate.

The results presented in this article has been funded by the Ministry of Investments and European Projects through the

Authorized licensed use limited to: Universita Studi di Torino - Dipartimento Di Informatica. Downloaded on February 17,2026 at 12:49:22 UTC from IEEE Xplore. Restrictions apply.

Human Capital Sectoral Operational Program 2014-2020, Contract no. 62461/03.06.2022, SMIS code 153735.

REFERENCES

[1] M. Iordache, L. Dumitru, "Simularea asistată de calculator a circuitelor analogice. Algoritmi si tehnici de calcul" [Computer aided simulation of analog circuits] , Editura POLITEHNICA Press, Bucureşti, 2014.

[2] M. Iordache, L. Mandache, "Analiza asistată de calculator a circuitelor analogice neliniare" [Computer aided analysis of nonlinear analog circuits], Editura POLITEHNICA, Bucureşti, 2004.

[3] Charles K. Alexander, Matthew N. O. Sadiku, "Fundamentals of electric circuits", Published by McGraw-Hill, New York, 2012.

[4] https://www.researchgate.net/publication/323507493_Diode_Models

[5] https://www.diodes.com/design/tools/spice-models/

[6] https://www.coursera.org/lecture/electronics/4-2-models-of-diode-behavior-tfHbH

[7] https://www.eeeguide.com/ac-equivalent-circuit-of-semiconductor-diode/

[8] https://www.researchgate.net/figure/Equivalent-circuit-for-the-rectifier_fig5_2982972

[9] http://fourier.eng.hmc.edu/e84/lectures/ch4/node8.html

[10] https://www.daenotes.com/electronics/devices-circuits/hybrid-equivalent-transistor

[11] https://www.afahc.ro/ro/facultate/cursuri/dispo_electro.pdf

[12] LTspice Tutorials; Mike Engelhardt, October 2011.

[13] Marius Florin Staniloiu, Horatiu Samir Popescu, Bogdan Glod, Mihai Iordache, "*SPICE model of a real capacitor: Capacitive feature analysis with voltage variation*" (EPE2020), Date of Conferences: 22-23 October 2020, Added to IEEE Xplore: 18 February 2021, DOI: 10.1109/EPE50722.2020.9305554

[14] Marius Florin Staniloiu, Horatiu Samir Popescu, Bogdan Glod, Mihai Iordache, "*SPICE model of a Real Capacitor feature analysis with current variation*" (EPE2020), Date of Conferences: 22-23 October 2020, Added to IEEE Xplore: 18 February 2021, DOI: 10.1109/EPE50722.2020.9305677

[15] Marius Florin Staniloiu, Horatiu Samir Popescu, Georgiana Rezmerita, Ionela Vlad, Mihai Iordache, "*SPICE model of a real Zener diode tested at room temperatura*" (EPE2022), Date of Conferences: 20-22 October 2022, Added to IEEE Xplore: 25 November 2022, DOI: 10.1109/EPE56121.2022.9959813

[16] BC817 (SIEMENS 07.94).

[17] https://www.infineon.com/dgdl/Infineon-IRFH3707-DataSheet-v01_01-EN.pdf?fileId=5546d462533600a40153561a2e0b1e78

Authorized licensed use limited to: Universita Studi di Torino - Dipartimento Di Informatica. Downloaded on February 17,2026 at 12:49:22 UTC from IEEE Xplore. Restrictions apply.