Evaluation Kit EPC91107KIT Quick Start Guide

5 kW, 240 V_{AC_RMS} to 400 V_{DC} 4-Level Totem-Pole PFC Converter using EPC2304

October 29, 2025

Version 2.0

EFFICIENT POWER CONVERSION

DESCRIPTION

The EPC91107KIT is a 5 kW, 4-Level Totem-Pole Power Factor Correction Converter featuring the 200 V rated, 5 mΩ $R_{DS(on)}$, EPC2304. The EPC91107KIT can draw up to 25 A_{AC_RMS} continuous current from the input. The EPC91107KIT was designed for Server Power supplies and is capable of meeting many of the Open Compute Project requirements. The system includes an EMI filter, in-rush current limit startup circuit, housekeeping power supply, and high-performance controller. The EPC91107KIT includes many critical features that allow for detailed performance evaluation, including measurement ports and access to critical circuit nodes. Figure 1 shows an image of the EPC91107KIT highlighting the various boards.

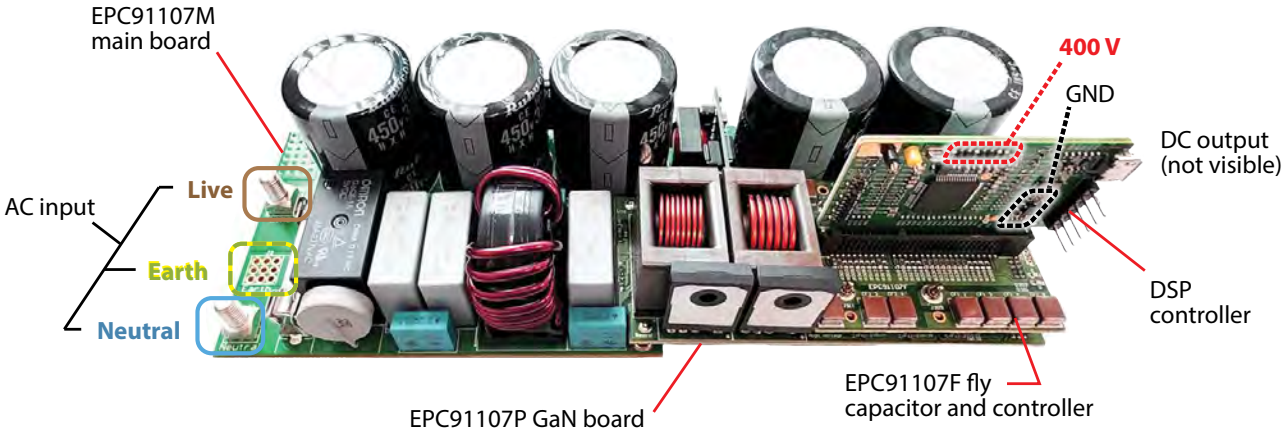

Figure 1: Photo overview of the EPC91107KIT board highlighting the main sections

The power circuit schematic of the EPC91107KIT converter is shown in Figure 2 with the control signal names. The topology is based on a totem-pole PFC where the high frequency leg (Q1-3X) is a four-level flying capacitor configuration. Also shown is the EMI filter and in-rush current limit circuit.

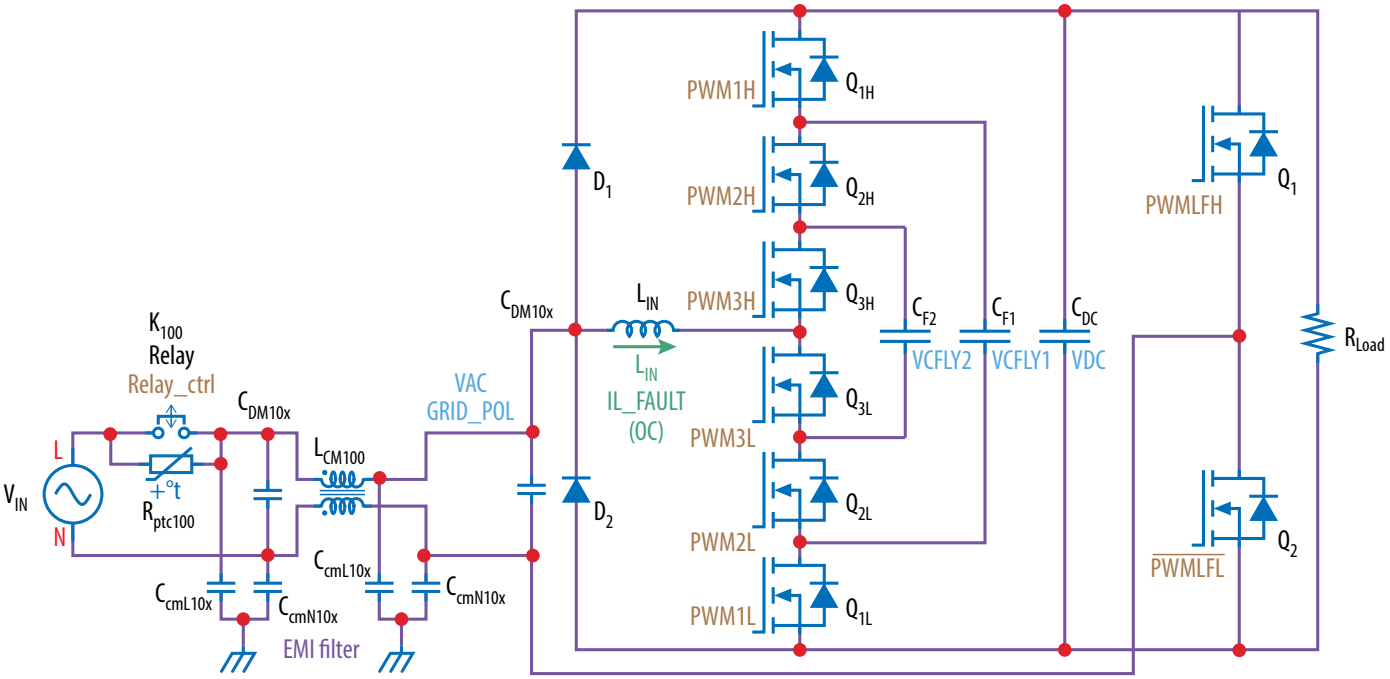

Figure 2. Power schematic of the EPC91107KIT

MAIN FEATURES

- High efficiency, high power density four-level totem-pole topology
- Housekeeping power supply
- Single common-mode choke EMI filter
- AC in-rush current limiter
- High power factor (complies with OCP standard)
- Low iTHD (complies with OCP standard)
- High dynamic current response
- Simple assembly
- No special components

Table 1: Electrical Operating Specifications (T_A = 25°C) EPC91107KIT

Symbol	Parameter	Conditions	Min	Nom	Max	Units
V_{IN}	Input supply voltage	Full power range (5 kW)	200 (1)	240	277	V_{AC_RMS}
V_{IN_ABS}	Full range input supply voltage	Output power derated	85		305 (2)	V_{AC_RMS}
I_{IN}	Input supply current	Continuous, fuse = 32 A_{RMS}			25	A_{AC_RMS}
F_{IN}	Grid frequency		47		63	A_{AC_RMS}
V_{OUT}	Output voltage		384	400	416	V_{DC}
V_{OMAX}	Absolute max. output voltage				450	V_{DC}
I_{OUT}	Output current	Continuous		12.5 (3)		A_{DC}
V_{OUT_RIP}	Peak-to-peak output voltage ripple at twice input frequency	At full load current		32		V
f_{SW}	FET switching frequency (PFC inductor will be 3x)			140		kHz

(1) Hardware is capable of operating as low as 85V AC input, but will be current limited to 25 A_{RMS}. Should operation below 200V be required, then contact EPC support for updated firmware

(2) Can function up to 305 V_{AC_RMS}, EMI filter ceramic common mode capacitors cannot exceed 277 V_{AC_RMS}

(3) EPC91107KIT has no heatsink installed. **High airflow forced air cooling is required at high load power levels. Device temperature must be observed by thermal camera to ensure device temperature is withing datasheet maximum levels.**

HIGHLIGHTED PARTS

The EPC91107KIT comprises four PCB assemblies, shown in Figure 3 and each performing a specific function. The four PCB assemblies are:

1) **EPC91107M** – Main motherboard with in-rush current limit circuit, EMI filter, housekeeping power supply, main bus capacitors and connections for the GaN board assembly (EPC91107P) and is shown in Figures 4 and 5
2) **EPC91107P** – GaN board assembly that is the complete multi-level totem pole PFC converter and includes connection to the flying capacitor and controller interface board assembly (EPC91107F) as shown in Figures 6 and 7
3) **EPC91107F** - Flying capacitor and controller interface board assembly that includes the bulk of the flying capacitors and the connection interface for the controller card as shown in Figures 8 and 9
4) **Controller card** - Standard Microchip Plug-In-Module (PIM) controller

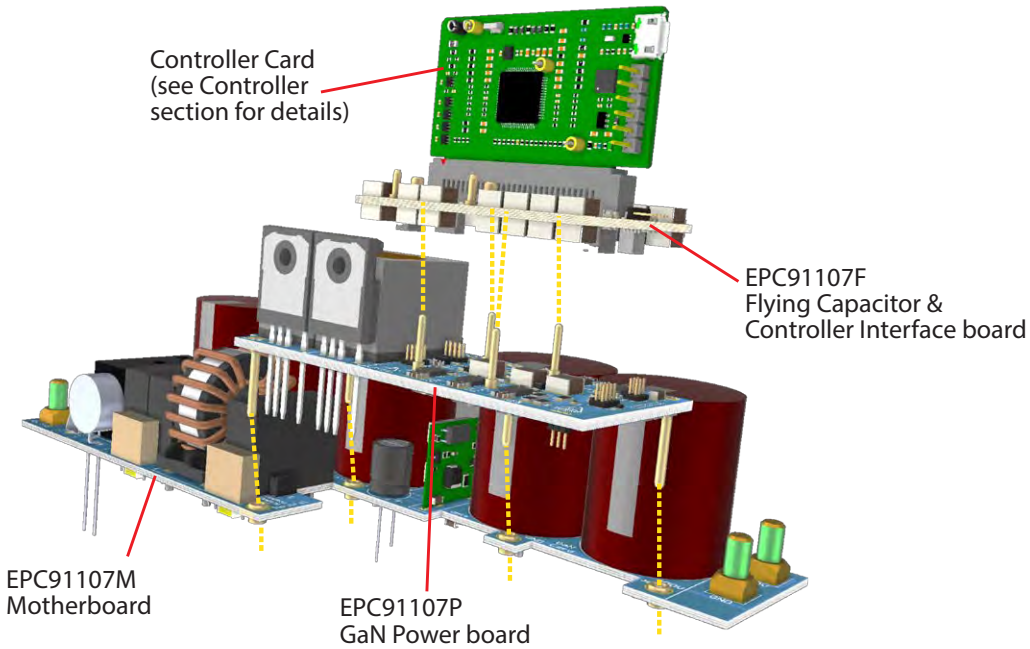

Figure 3: EPC91107KIT exploded view of the assembly

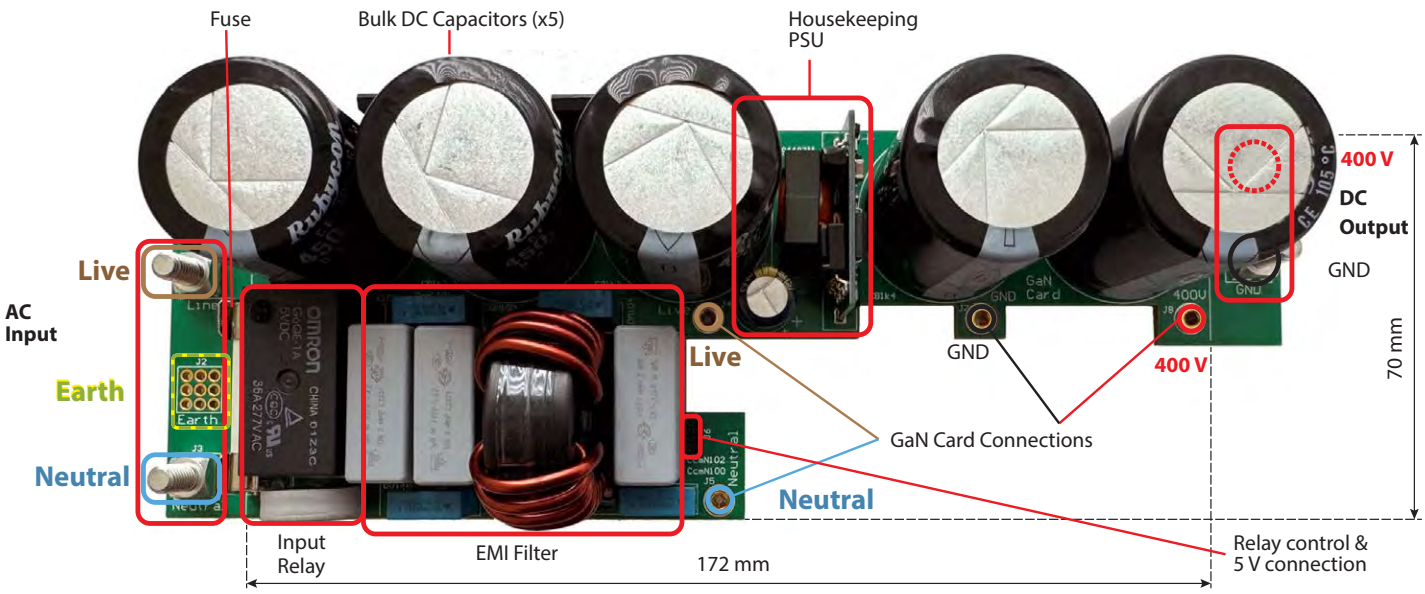

Figure 4: Top view of the EPC91107KIT motherboard EPC91107M showing the main circuit elements

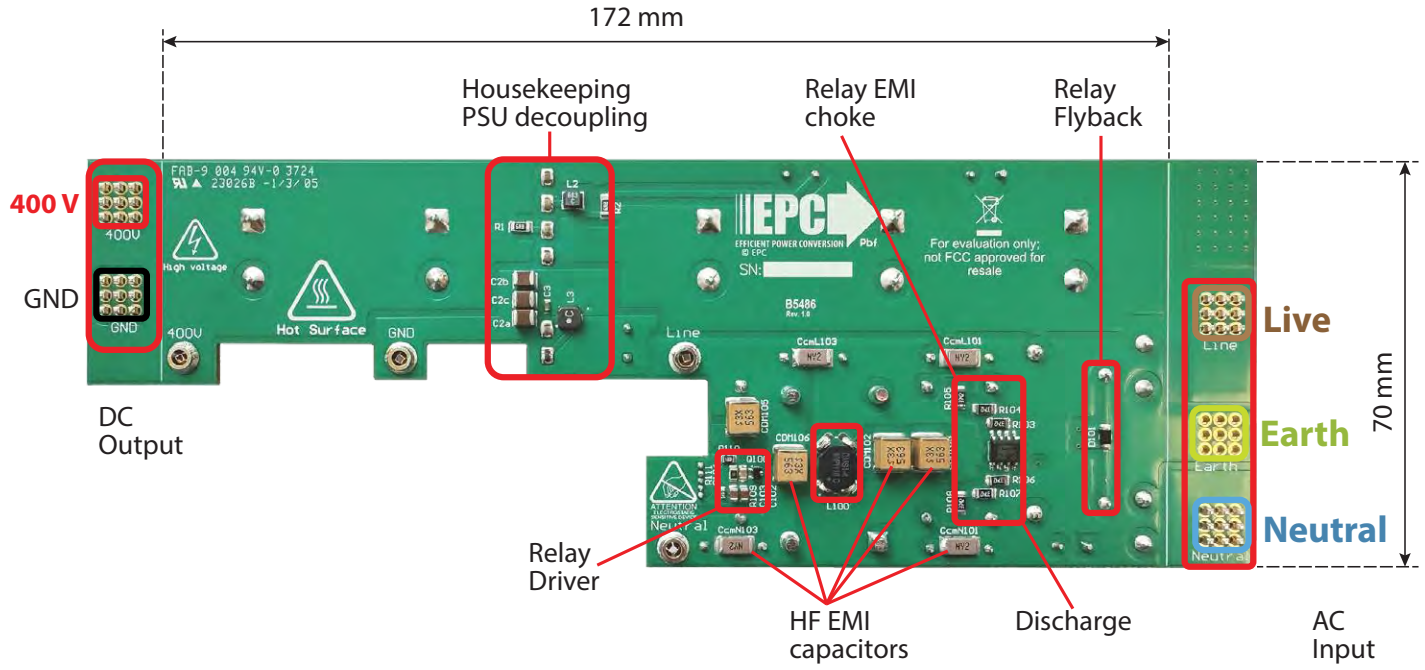

Figure 5: Bottom view of the EPC91107KIT motherboard EPC91107M showing the main circuit elements

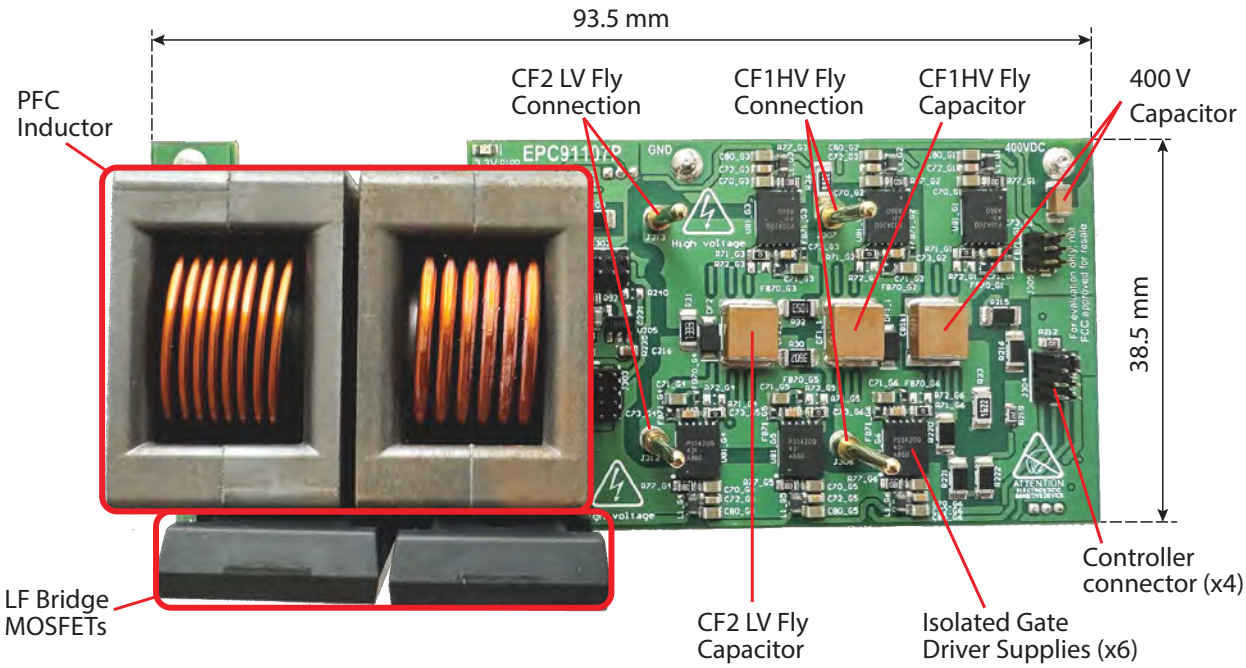

Figure 6: Top view of the EPC91107KIT GaN power board EPC91107P showing the main circuit elements

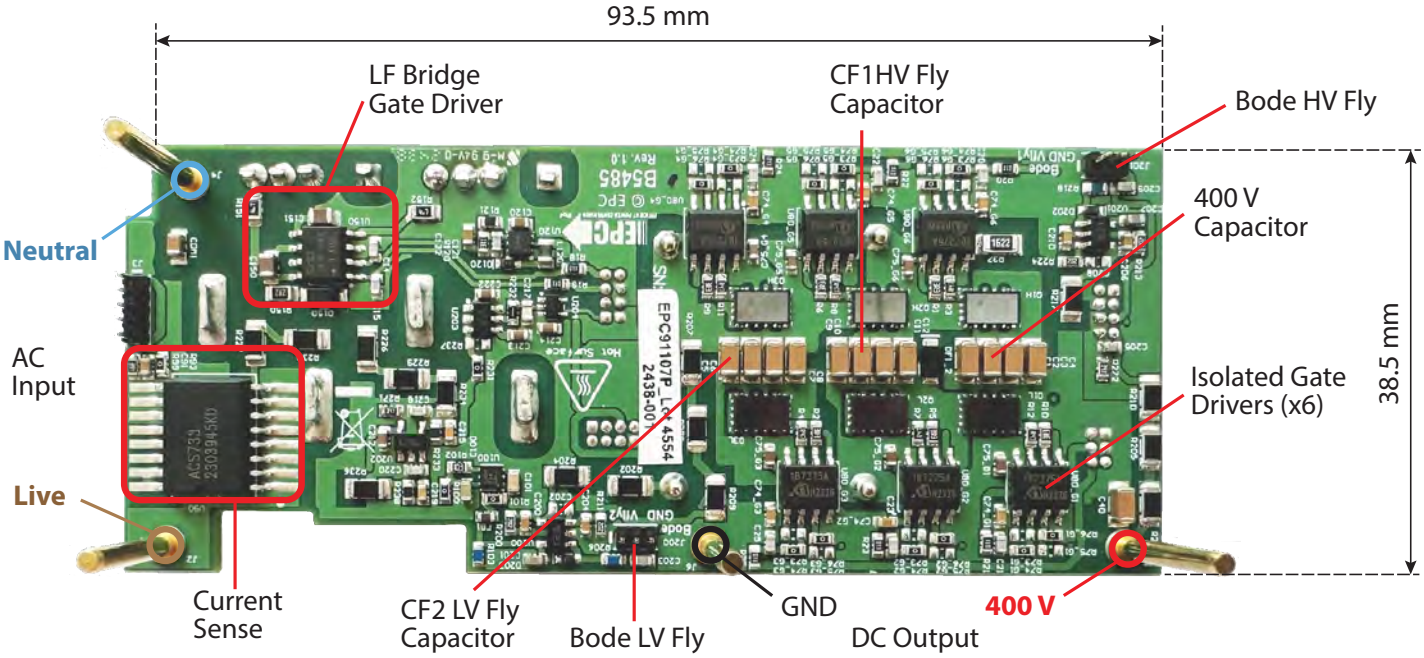

Figure 7: Bottom view of the EPC91107KIT GaN power board EPC91107P showing the main circuit elements

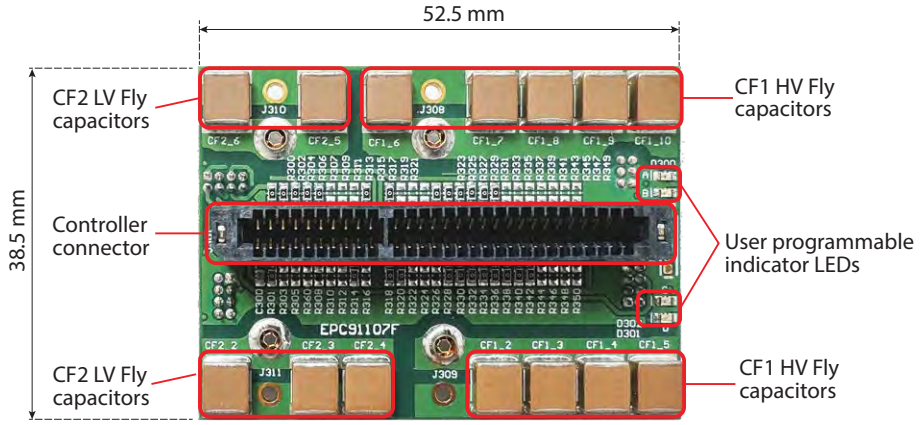

Figure 8: Top view of the EPC91107KIT Flying capacitor and controller interface board EPC91107F showing the main circuit elements

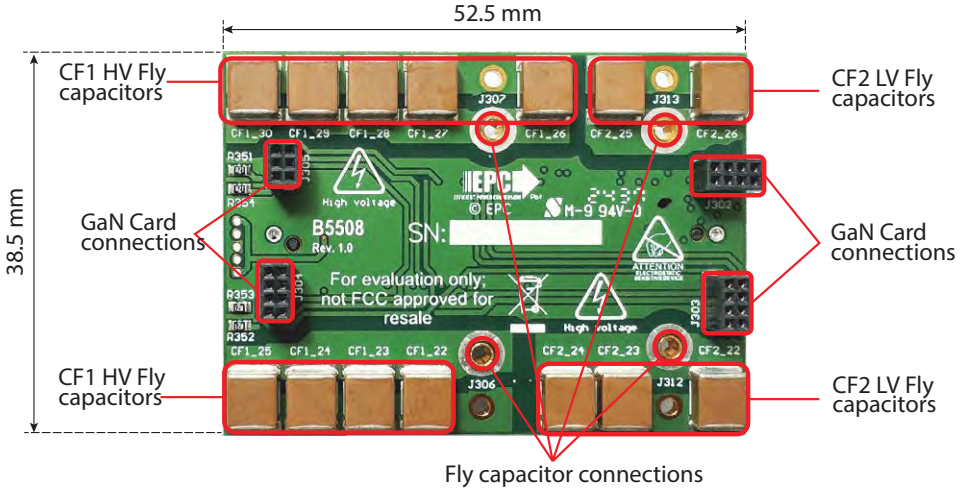

Figure 9: Bottom view of the EPC91107KIT Flying capacitor and controller interface board EPC91107F showing the main circuit elements

Controller Board

The EPC91107KIT comes with a vertical mount edge connector that is compatible with Microchip's PIM controllers as shown in Figure 10. These controllers feature a MCP2221A USB to UART/I2C serial converter, various analog inputs with op amp buffers, and a 250 ps PWM resolution.

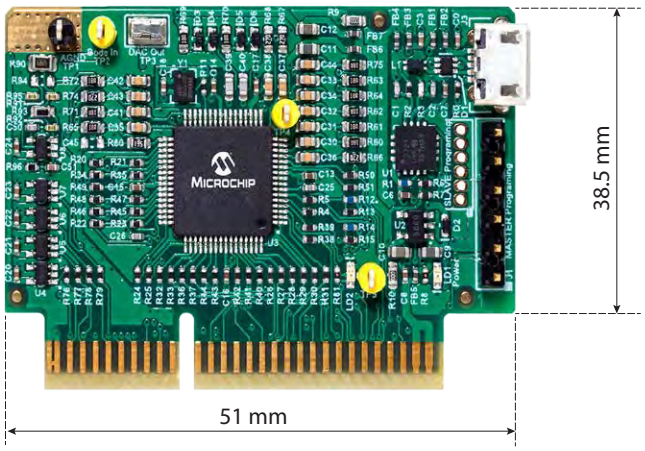

Figure 10: Photo of a typical controller card for the EPC91107KIT

Compatible controllers are listed as follows:

1) **EV12Y79A** (**default**) featuring the dsPIC33CK512MP606 (64 pin) DSP controller,

2) **MA330048** (**tested**) featuring the dsPIC33CK256MP506 (64 pin) DSP controller,

3) **EV42F30A** (**under development**) featuring the dsPIC33AK512MPS506 next generation dsPIC

The EPC91107KIT (**default**) controller is the **EV12Y79A** and requires the following modifications:

- C42 (size 0603): Add 220 nF > 16 V in parallel (V_{REF} – pin 4)
- C43 (size 0603): Add 220 nF > 16 V in parallel (V_{CFLY2} – pin 9)
- C37 (size 0603): Add 47 nF > 16 V in parallel (V_{AC} – pin 6)
- C30 (size 0603): Add 47 nF > 16 V in parallel (I_L – pin 12)

Where Figure 11 shows the position of the various components.

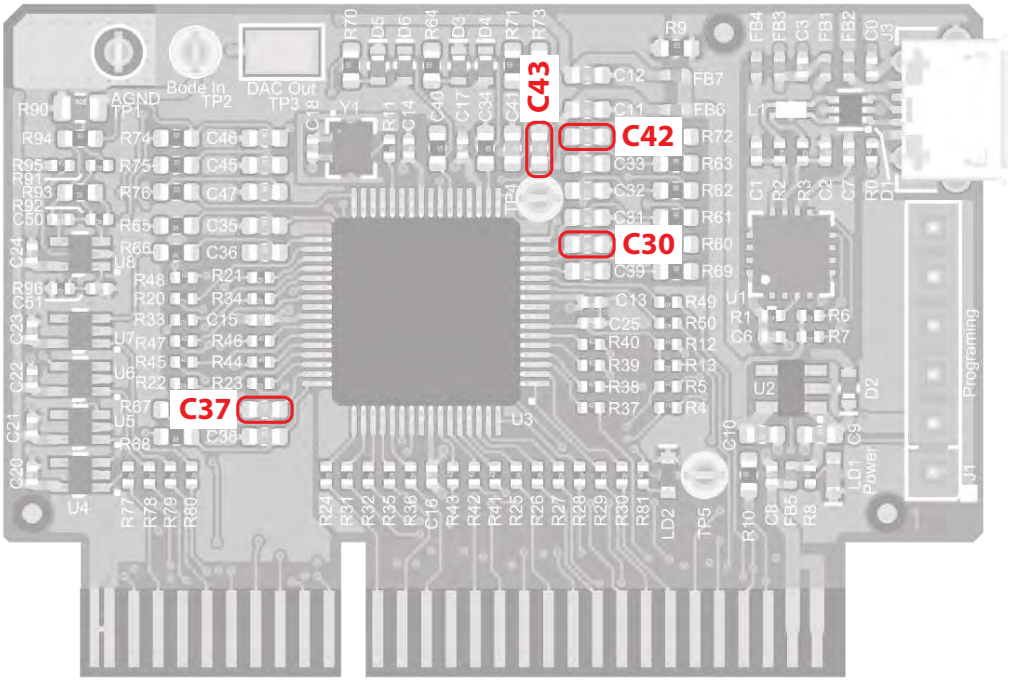

*Figure 11: **EV12Y79A** component modifications locations for compatibility with the EPC91107KIT*

The EPC91107KIT (**alternative**) controller is the **MA330048** and requires the following modifications:

- C41 (size 0603): Add 220 nF > 16 V in parallel (V_{REF} – pin 4)
- C42 (size 0603): Add 220 nF > 16 V in parallel (V_{CFLY2} – pin 9)
- C35 (size 0603): Add 47 nF > 16 V in parallel (V_{AC} – pin 6)
- C30 (size 0603): Add 47 nF > 16 V in parallel (I_L – pin 12)

Where Figure 12 shows the position of the various components.

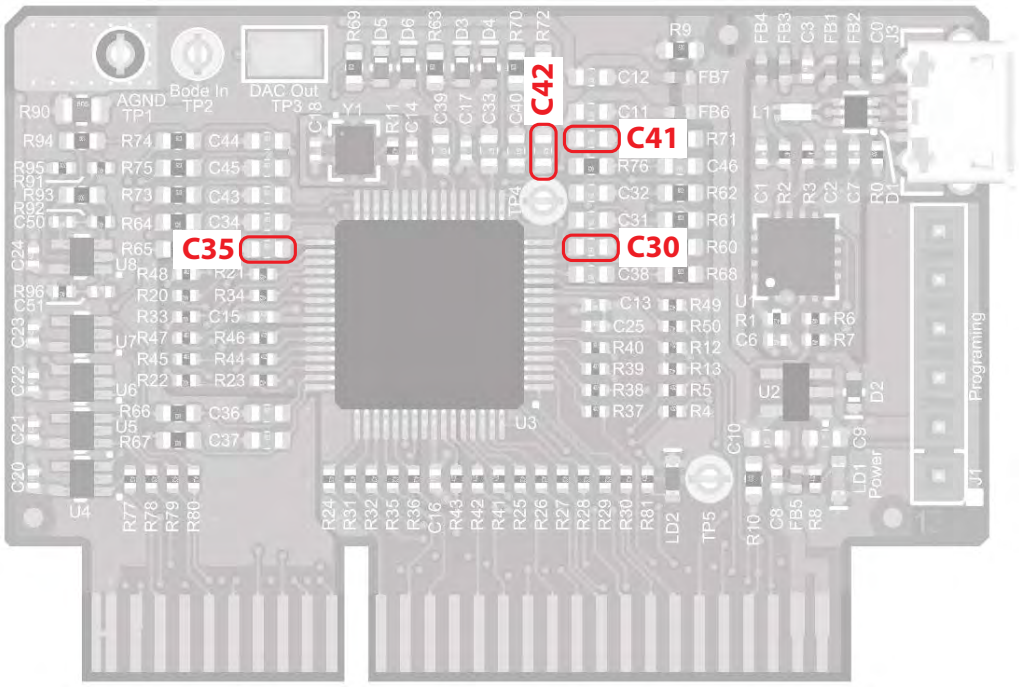

*Figure 12: **MA330048** component modifications locations for compatibility with the EPC91107KIT*

Relay and Control Power Pin Assignment

Table 2: EPC91107M and EPC91107P relay and control power pin map on connectors J6 and J3 respectively.

EPC91107M/ P pin number	Function name	Description	Type	Input/Output	Electrical
1,5	5 V	5 V supply for gate drivers and controller card	Power	–	6.3V max, 500 mA max
2,4	Relay_ctrl	Control signal to close inrush limit relay	Digital	Output	0 V - 3.3 V
3	GND	Power ground	Power	–	–

Controller Pin Assignment

Table 3: EPC91107F controller pin map on connector J301

EPC91107F Pin Number	Function name	Description	Type	Input/ Output	Electrical	PIM - Edge Connector Pin #
1, 2	AGND	Analog ground	Power	–	–	1, 2
3	DAC	Voltage reference feedback	Analog	Output	0 V – 3.3 V	3
4	VREF	Analog reference voltage feedback	Analog	Input	0 V – 3.3 V offset = 1.65 V	4
6	VAC	AC voltage feedback	Analog	Input	0 V – 3.3 V offset = 1.65 V	6
8	IL	PFC inductor current feedback	Analog	Input	0 V – 3.3 V offset = 1.65 V	8
9	VCFLY2	LV flying capacitor CFLY2 voltage feedback ($V_{DC}/3$)	Analog	Input	0 V – 3.3 V	9
10	VDC	DC voltage feedback	Analog	Input	0 V – 3.3 V	10
12	IL	PFC inductor current feedback	Analog	Input	Power	12
17	VCFLY1	HV flying capacitor CFLY1 voltage feedback ($2 \cdot V_{DC}/3$)	Analog	Input	0 V – 3.3 V	17
21	TX	UART TX	Digital	Output	0 V / 3.3 V	23
22	LED1	Indicator LED 1	Digital	Output	0 V / 3.3 V	24
23	RX	UART RX	Digital	Input	0 V / 3.3 V	25
30	PWMLFL	Low frequency bridge, low side FET PWM	Digital (active low)	Output	0 V / 3.3 V	32
31	LED2	Indicator LED 2	Digital	Output	0 V / 3.3 V	33
32	PWMLFH	Low frequency bridge, high side FET PWM	Digital	Output	0 V / 3.3 V	34
33	GRID_POL	Grid polarity	Digital	Input	0 V / 3.3 V	35
34	LED4	Indicator LED 4	Digital	Output	0 V / 3.3 V	36
35	PWM3H	PWM innermost upper	Digital	Output	0 V / 3.3 V	37
36	IL_FAULT	PFC inductor over-current current fault	Digital (active low)	Input	0 V / 3.3 V	38
37	LED3	Indicator LED3	Digital	Output	0 V / 3.3 V	39
38	PWM2L	PWM center pair lower	Digital	Output	0 V / 3.3 V	40
39	PWM3L	PWM innermost lower	Digital	Output	0 V / 3.3 V	41
40	PWM2H	PWM center pair upper	Digital	Output	0 V / 3.3 V	42
41	Relay_ctrl	In-rush relay control	Digital	Output	0 V / 3.3 V	43
43	PWM1H	PWM outermost upper	Digital	Output	0 V / 3.3 V	45
45	PWM1L	PWM outermost lower	Digital	Output	0 V / 3.3 V	47
55, 57	5 V	5 V supply	Power	–	6.3 V max, 70 mA max	57, 59
56, 58	GND	Power ground	Power	–	–	58, 60

External 5 V Connection

An external 5 V supply can be connected directly across the 5 V output of the housekeeping power supply with minimum voltage of 5 V and maximum of 5.5 V as shown in Figure 13. The external power supply needs to be 2 A capable and must be fully isolated from the ground of the EPC91107KIT unit with at least 600 V capability.

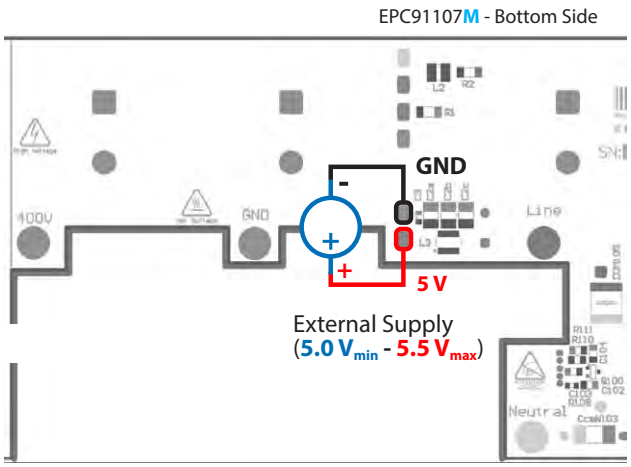

Figure 13: External 5V connection location on EPC91107M

Switch-node Voltage Measurement

Figure 14 shows the location to measure the switch-node (SWN) voltage with respect to neutral. It is important to use a high-voltage differential probe for this measurement.

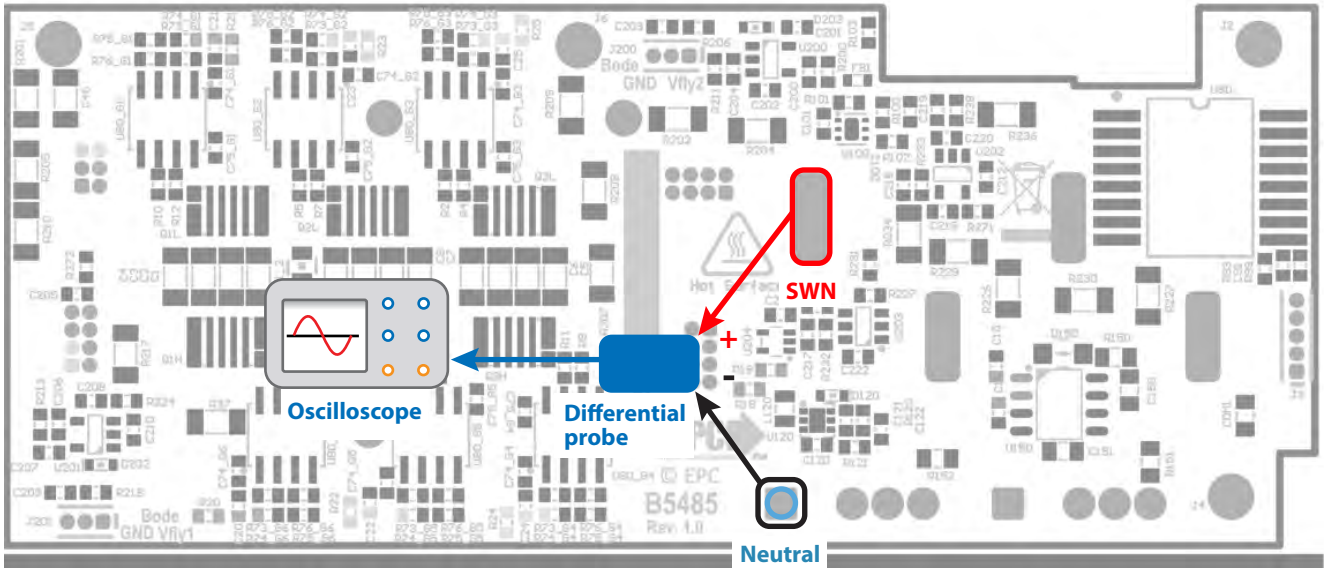

Figure 14: Location for the switch-node (SWN) to neutral measurement

Controller Summary

The control diagram for the EPC91107KIT is shown in Figure 15 and primarily comprises a traditional totem-pole PFC controller. There is a phase lock loop that locks to the grid frequency and produces a sinusoidal reference used throughout the controller. An outer voltage loop determines the peak current reference that only updates once a cycle using the zero-order hold (ZOH) function which is followed by a multiplier that produces the actual current reference. The current control loop determines the duty-cycle setpoint using the difference between the measured current and current reference that is added with the predictive duty cycle determined from the output voltage measurement and the generated sinusoidal input voltage reference.

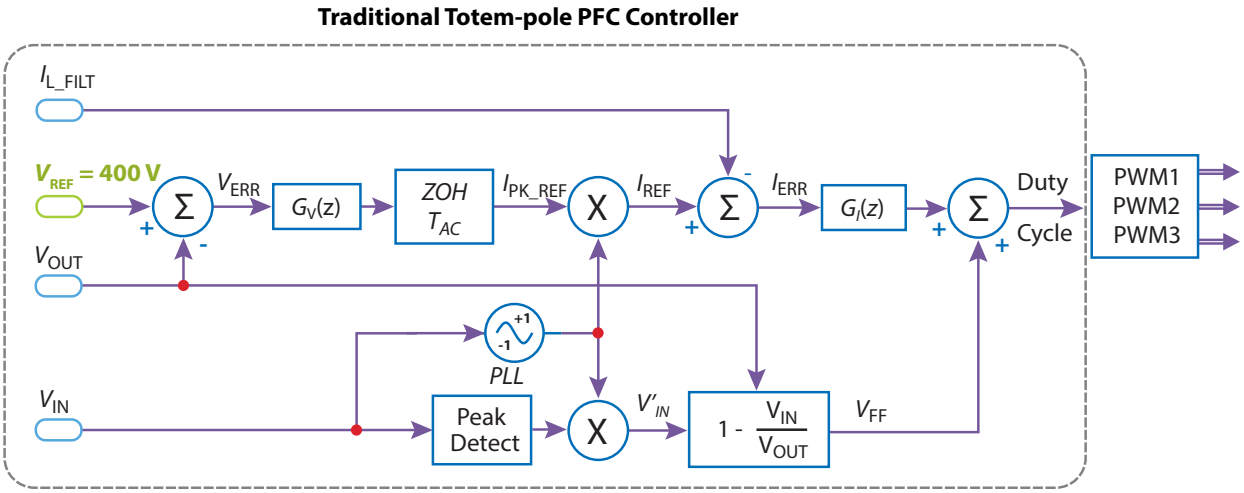

Figure 15: Block diagram of the four-level PFC controller

The PWM generator uses the duty-cycle setpoint and splits into three independent complementary PWM generators that are 120° phase shifted with respect to each other as shown in Figure 16.

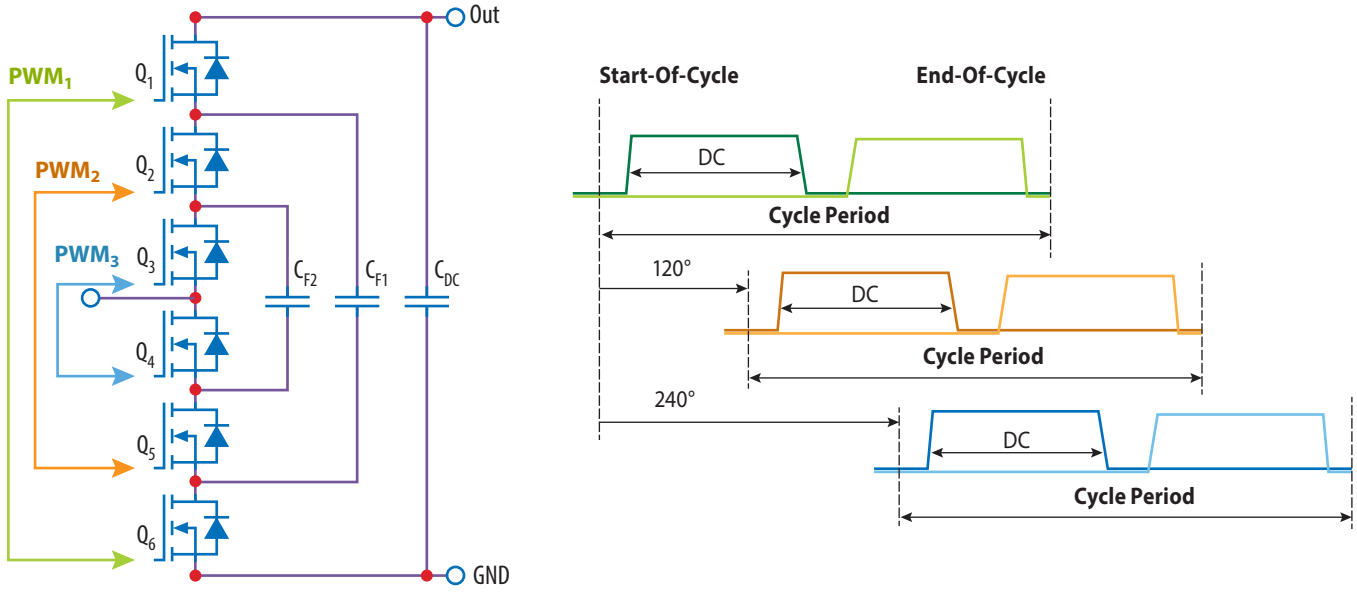

Figure 16: Multi-level bridge PWM signal allocation and pairs

THERMAL CONSIDERATIONS

The EPC91107KIT is not equipped with a heatsink, so caution must be taken when operating at high power where the devices generate high heat flux to prevent over-temperature of the devices. **It is recommended to use a high rate of forced air cooling over the power FETs located on the bottom side of the EPC91107P board and monitor the temperature using a thermal camera to ensure that the temperatures of the FETs are within datasheet limits.**

The addition of heatsink can significantly improve the heat dissipation from the GaN FETs by adding cooling from the top side of the device and thus reduce the amount of forced air required to maintain the FET temperatures within the datasheet limits and at high power loads. Figure 17 shows cross-sectional view of the cooling system suitable for the EPC91107P board. A SMD spacer is used to set the correct height for the heat-sink or spreader above the FETs and provide the correct compression for the thermal interface material.

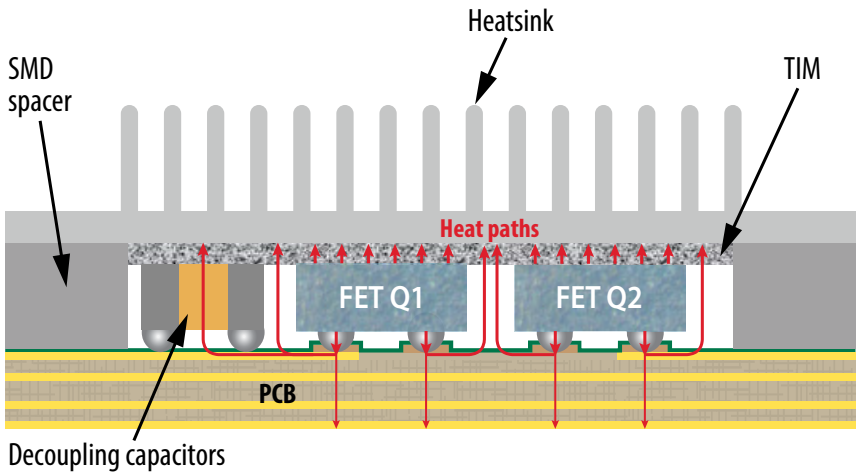

Figure 17: Cross-sectional view of the back-side cooling thermal system

It is important that the TIM for the eGaN FETs also serves to electrically insulate those connections from the heat-spreader. It may be necessary to first place a heat-spreader above the FETs before interfacing to a larger heatsink. The heat-spreader TIM is then placed over the heat-spreader and the heatsink is then carefully placed on top.

The choice of TIM for the eGaN FETs needs to consider the following characteristics:

Mechanical compliance – During the attachment of the heat spreader, the TIM underneath is compressed from its original thickness to the vertical gap distance between the spacers and the FETs. This volume compression exerts a force on the eGaN FET/IC. A maximum compression of 2:1 is recommended for maximum thermal performance and to constrain the mechanical force which maximizes thermal mechanical reliability.

Electrical insulation – The backside of the eGaN FET is a silicon substrate that is connected to the Source. Electrical insulation from each GaN FET to the heat-spreader / heatsink is required for the thermal solution.

Thermal performance – The choice of thermal interface material will affect the thermal performance of the thermal solution. Higher thermal conductivity materials are preferred to provide higher thermal conductance at the interface.

The thermal requirements for the choice of TIM for the heat-spreader can be relaxed due to the larger areas which allows the use of lower thermal conductivity materials with negligible impact on thermal performance. To help make up for the lower thermal conductivity, a thinner sheet may be used.

EPC recommends the t-Global Part Number: TG-A1780 for the eGaN FETs TIM as it has a high thermal conductivity of 17.8 W/m·K. For the heat-spreader TIM, the t-Global Part Number: TG-A620 with a moderate thermal conductivity of 6.2 W/m·K can be used.

POWER CONNECTION

Connecting power to the EPC91107KIT is very simple and shown in Figure 18. It is important to use a programmable power supply for the AC source until such time EPC releases a version of the controller code tested on "dirty" grids. In addition, the AC source should be selected with sufficient power rating to power the EPC91107KIT.

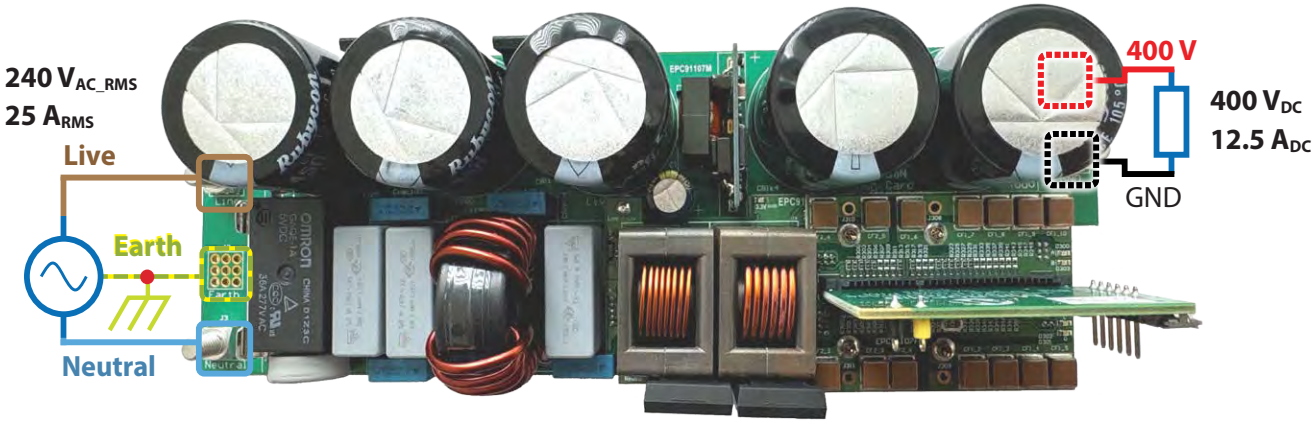

Figure 18: Power connections to the EPC91107KIT

QUICK START PROCEDURE

Operating restrictions and precautions:

1) ONLY use a programmable AC source set to between 200 V AC and 277 V AC and with 50 or 60 Hz for initial testing. EPC will be providing updates on the controller code to ensure reliable operation on a "dirty" grid.
2) Do not activate the load until the unit is fully operational.
3) Ensure that high voltage safety precautions are in place.
4) Never start the converter with the load activated. Keep the DC programmable load off. Once the converter is operational, then you can change settings on the load. It is best practice at this time to make small load changes. For load steps larger than 5 A, please contact EPC.
5) Make sure the AC source has sufficient power to operate the board. A minimum power requirement of 1 kW is recommended.
6) The operating instructions in this document do not cover how to perform bode measurements. Please refer to the equipment manufacturer for those instructions.

Operating Procedure:

1) Connect the power supply (in the off position) and load as shown in Figure 18.
2) Make sure the load is in the off position.
3) To start, simply turn on the AC source, do NOT turn up the power supply.
4) Make sure to cool the board (bottom side where the FETs are) with a fan. There is no heatsink so please use a thermal camera to monitor the temperature of the devices.
5) Exercise caution when taking measurements, particularly gate voltages, switch nodes etc. It is best practice to connect probes in a stable manner prior to operation.
6) Activate the load and increase in small steps. Always observe the temperature of the GaN FETs and do not exceed the maximum power of the system stated in table 1.
7) For shutdown, please follow steps in reverse. For custom tests other than described here, please contact EPC.

WORKING WAVEFORMS

Waveforms measured using a LeCroy MDA8108HD oscilloscope. Voltage measurement taken using LeCroy HVD3106A High Voltage Differential Probe and current measurement taken using a LeCroy CP031A 30 A Current Probe.

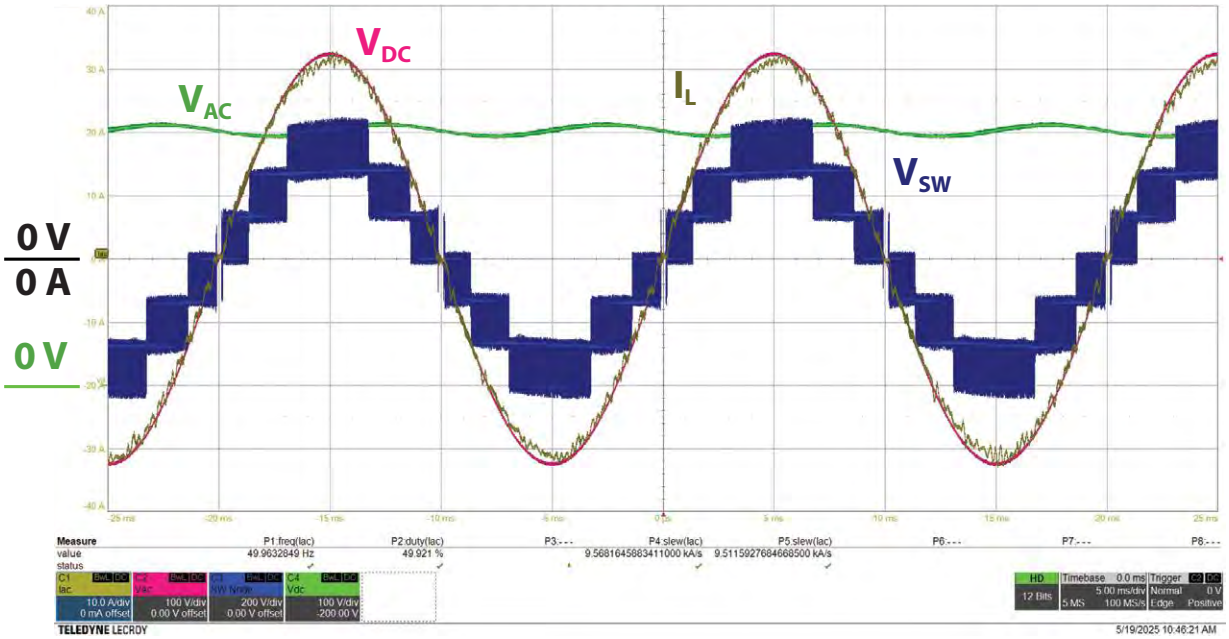

*Figure 19: Measured waveforms of the EPC91107KIT operating with V_{IN} = 230 V_{RMS}, **50 Hz**, V_{OUT} = 400 V_{DC}, P_{OUT} = 5 kW and showing input voltage, input current, output voltage and switch-node voltage with respect to neutral.*

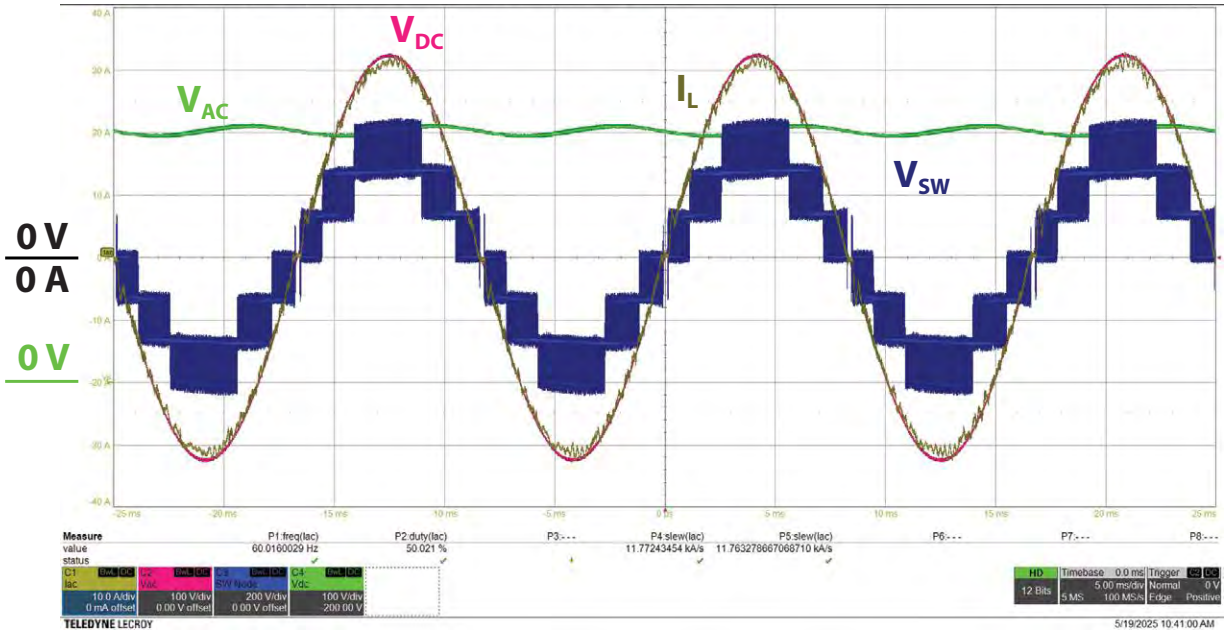

*Figure 20: Measured waveforms of the EPC91107KIT operating with V_{IN} = 230 V_{RMS}, **60 Hz**, V_{OUT} = 400 V_{DC}, P_{OUT} = 5 kW and showing input voltage, input current, output voltage and switch-node voltage with respect to neutral.*

Efficiency, harmonic and power factor measurements taken using a Yokogawa WT500 power analyzer. Figure 21 shows the measured efficiency against the 80PLUS and OCP standards. The 80PLUS standard has been adjusted to allocate 50% losses to the PFC converter and 50% losses to the isolation stage and the efficiency adjusted upwards accordingly.

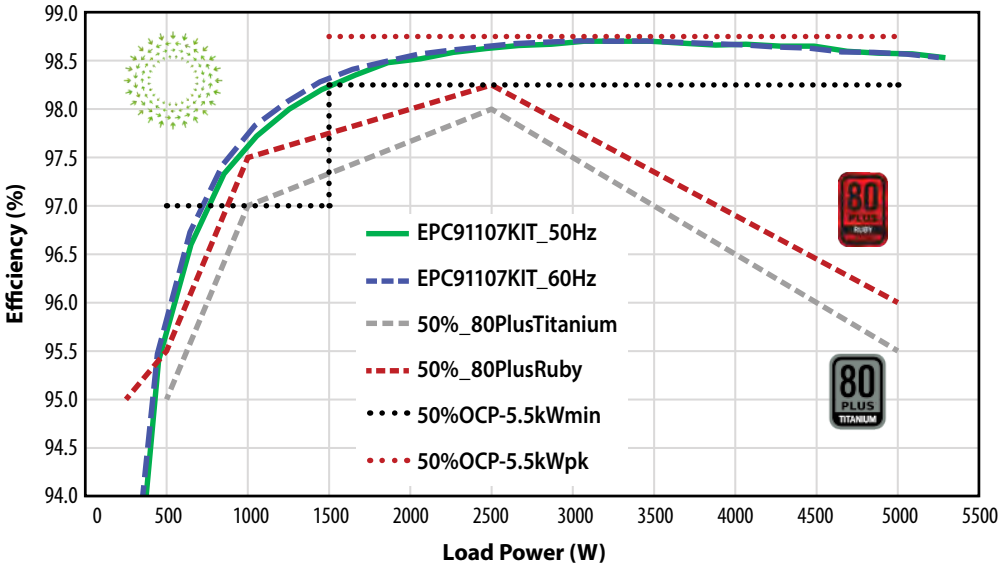

Figure 21: Measured efficiency operating with V_{IN} = 230 V_{RMS}, at both 50 Hz and 60 Hz, V_{OUT} = 400 V_{DC}, including housekeeping power. Also shown are the 50% adjusted 80PLUS and OCP standards.

Input current total harmonic distortion (iTHD) is shown in Figure 22, for both 50 Hz and 60 Hz cases, against the M-CRPS and OCP standards. It should be noted that no special techniques have been implemented to achieve these results and require little additional effort to ensure full compliance with the standards.

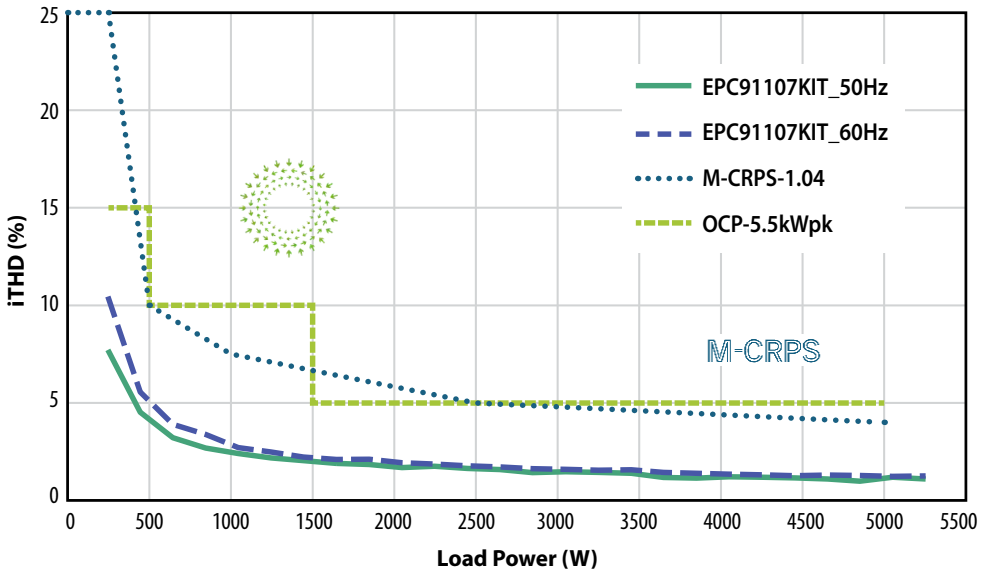

Figure 22: Measured iTHD operating with V_{IN} = 230 V_{RMS}, V_{OUT} = 400 V_{DC} against the M-CRPS and OCP standards.

Input power factor is shown in Figure 23, for both 50 Hz and 60 Hz cases, against the M-CRPS and OCP standards. It should be noted that with techniques to ensure compliance with iTHD will ensure full compliance with power factor standards.

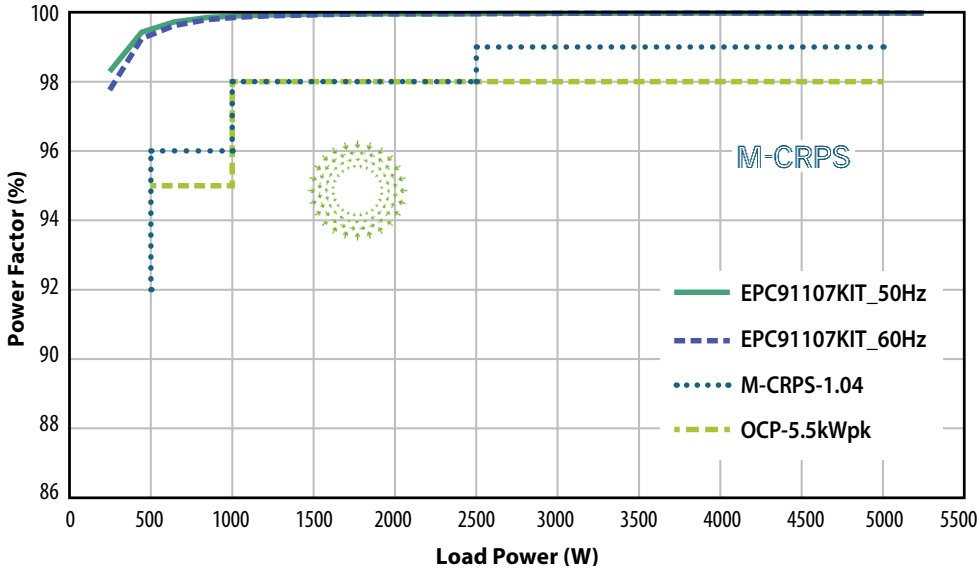

Figure 23: Measured power factor operating with V_{IN} = 230 V_{RMS}, V_{OUT} = 400 V_{DC} against the M-CRPS and OCP standards

CONDUCTED EMI

Conducted EMI tests were performed as pre-compliance measurements in a laboratory environment, to verify the electro-magnetic compatibility of the EPC911107KIT.

A block diagram illustrating the test setup, including the equipment and the Device Under Test (DUT), is provided in Figure 24.

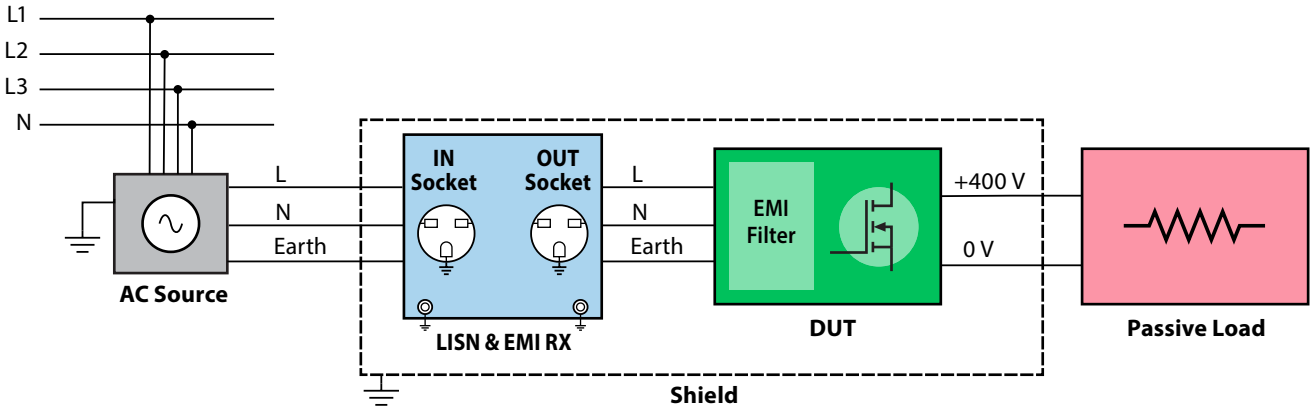

Figure 24: EMC test setup

The test bench was implemented in accordance with the relevant standards. The DUT was placed on a wooden table with a height of 1 m, while a grounded conductive wall was positioned at a distance of 40 cm behind the DUT. This setup ensures a controlled and repeatable measurement environment.

The following instrumentation was employed during the tests:

- AC Source
  - Kikusui PCR12000WEA2
- LISN & EMI Receiver
  - NARDA PMM ER8000 [option 1–9 kHz ÷ 3 GHz]
- Load
  - TE Connectivity TE1000 resistors

The results of the conducted EMI measurements are presented in Figure 25, showing the measured conducted emissions compared against the applicable regulatory limits.

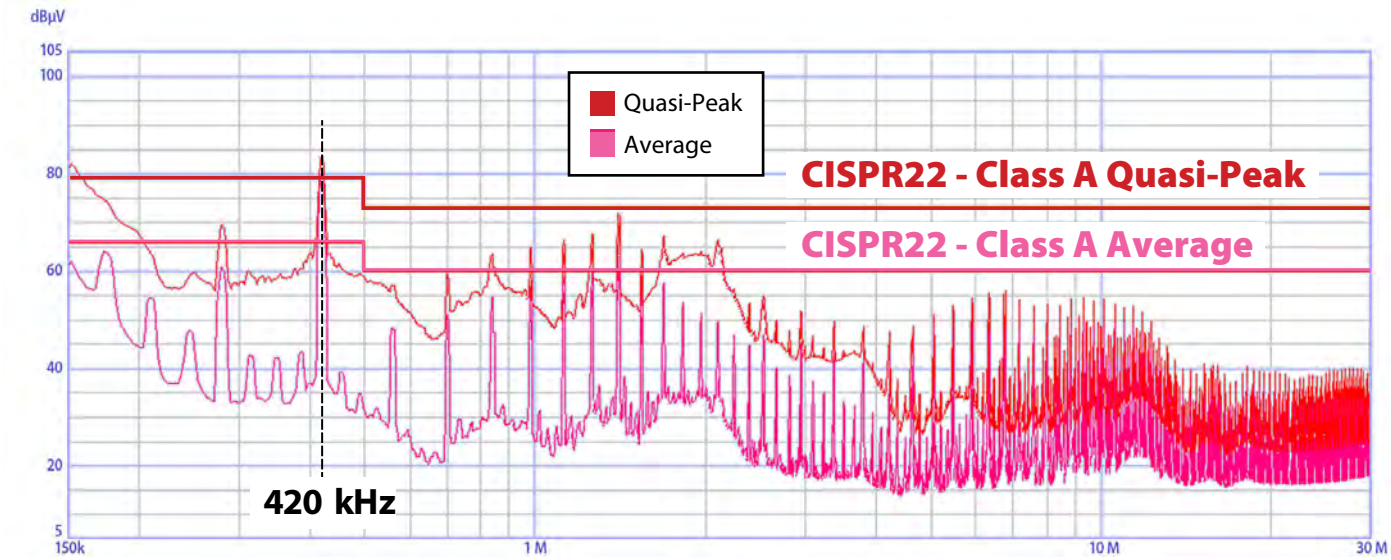

Figure 25: Measured conducted emissions operating with V_{IN} = 230 V_{RMS}, V_{OUT} = 400 V_{DC}, P_{OUT} = 3 kW against the Class A emissions limits

STARTUP WAVEFORMS

Figure 26 shows most important waveforms at the startup. Note that the V_{AC} is measured after the NTC thermistor. When no modulation activity is going on, the PFC acts like a full-bridge rectifier.

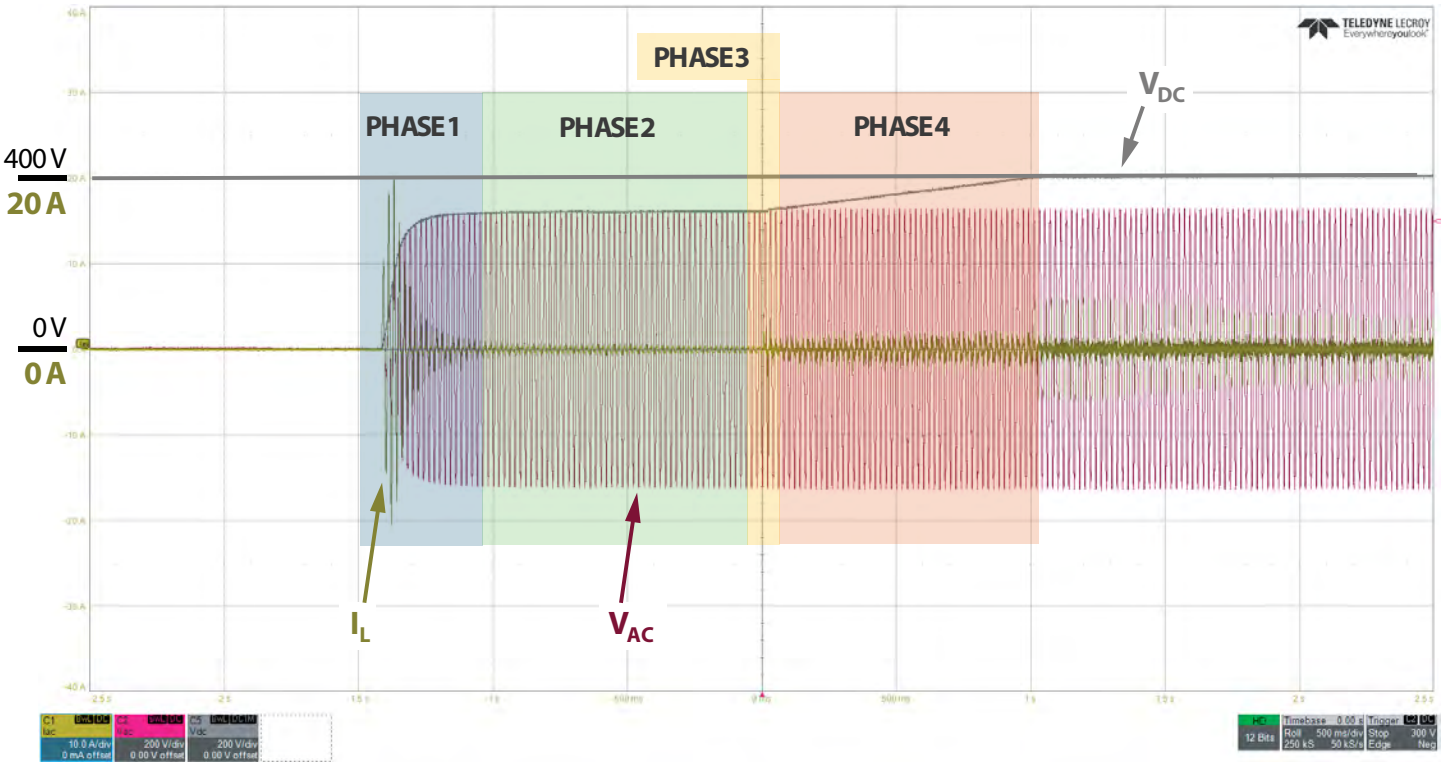

Figure 26: Startup waveform with V_{IN} = 230 V_{RMS}, V_{OUT} = 400 V_{DC} and no load

It is possible to identify 3 phases:

- **PHASE 1 – Inrush current**
  - The DC bulk capacitance is charged. To limit the inrush current an NTC thermistor is put in series. Current is limited to 20 A peak. To correctly operate the EPC91107KIT, the AC source must be capable of withstanding the initial inrush current peak without tripping.
- **PHASE 2 – Settling time**
  - As current flows, the capacitors charge up and the NTC thermistor heats up, which in turn reduces its resistance. This process is necessary to minimize the voltage difference between the input and output voltages before entering Phase 3.
- **PHASE 3 – NTC bypass, closing the relay**
  - To increase efficiency, the relay is closed when the voltage difference between the input and output is minimal. This bypasses the NTC. A small current peak is still noticeable due to the residual voltage difference. The lower the voltage difference at the end of Phase 2, the smaller the current peak when closing the relay.
- **PHASE 4 – Boost voltage ramp-up**
  - PWM modulation activity on the GaN FETs starts, boosting the input voltage. Output voltage is linearly increased until it reaches the target value of 400 V. At this point, the low-frequency MOSFET bridge is also enabled.

LOAD STEP RESPONSE

The dynamic behavior and regulation capabilities of the PFC were tested by simulating abrupt changes in the load current. The electronic load used is the Elektro-Automatik PSBE 10500-180 used in constant-current mode with a slew-rate of 2.2 A/ms.

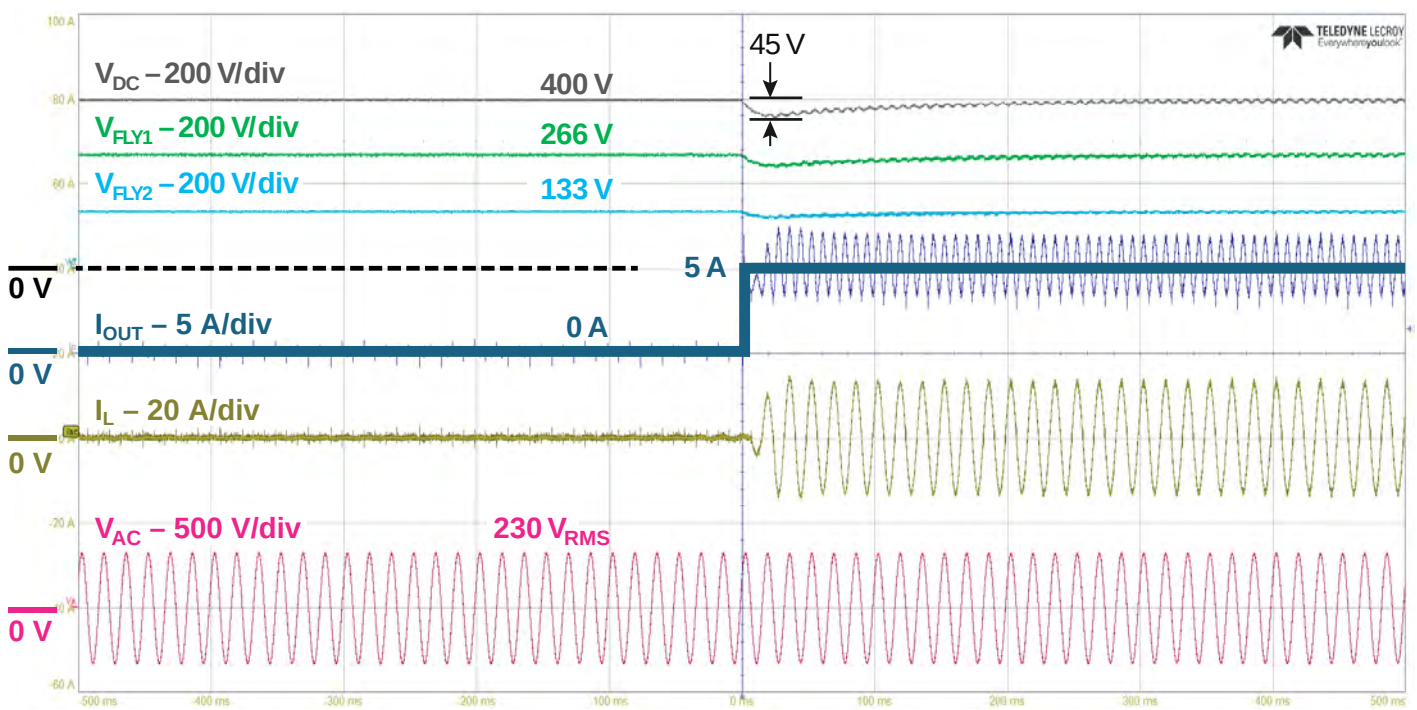

Figure 27: Load step response waveforms 0 A to 5 A with V_{IN} = 230 V_{RMS}, V_{OUT} = 400 V_{DC}

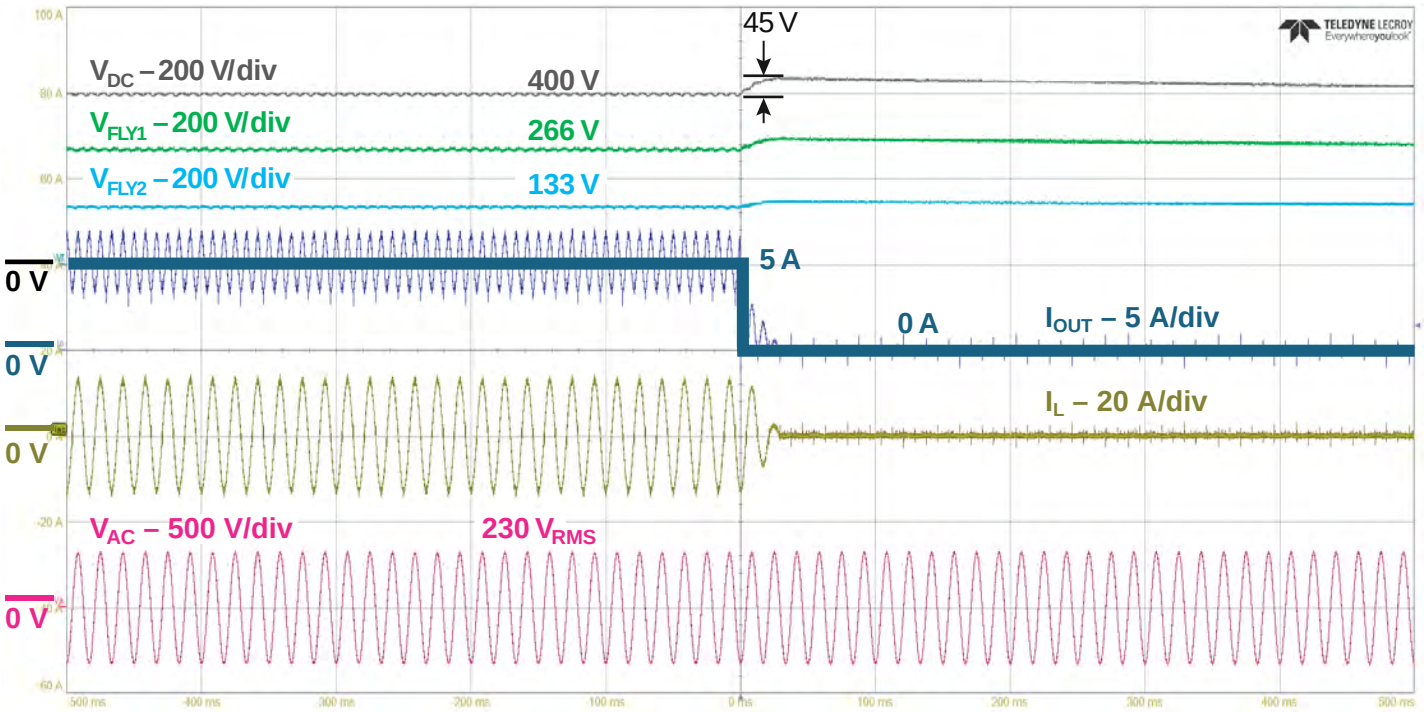

Figure 28: Load step response waveforms 5 A to 0 A with V_{IN} = 230 V_{RMS}, V_{OUT} = 400 V_{DC}

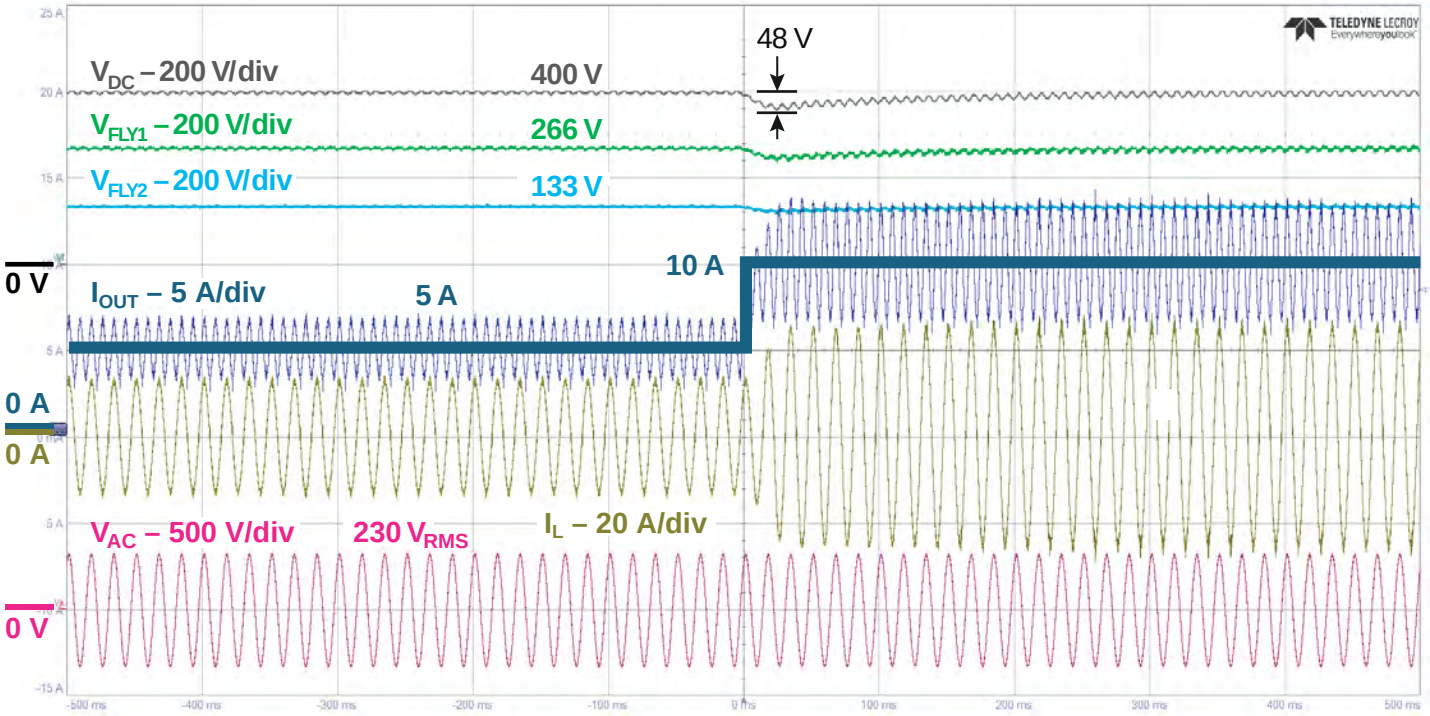

Figure 29: Load step response waveforms 5 A to 10 A with V_{IN} = 230 V_{RMS}, V_{OUT} = 400 V_{DC}

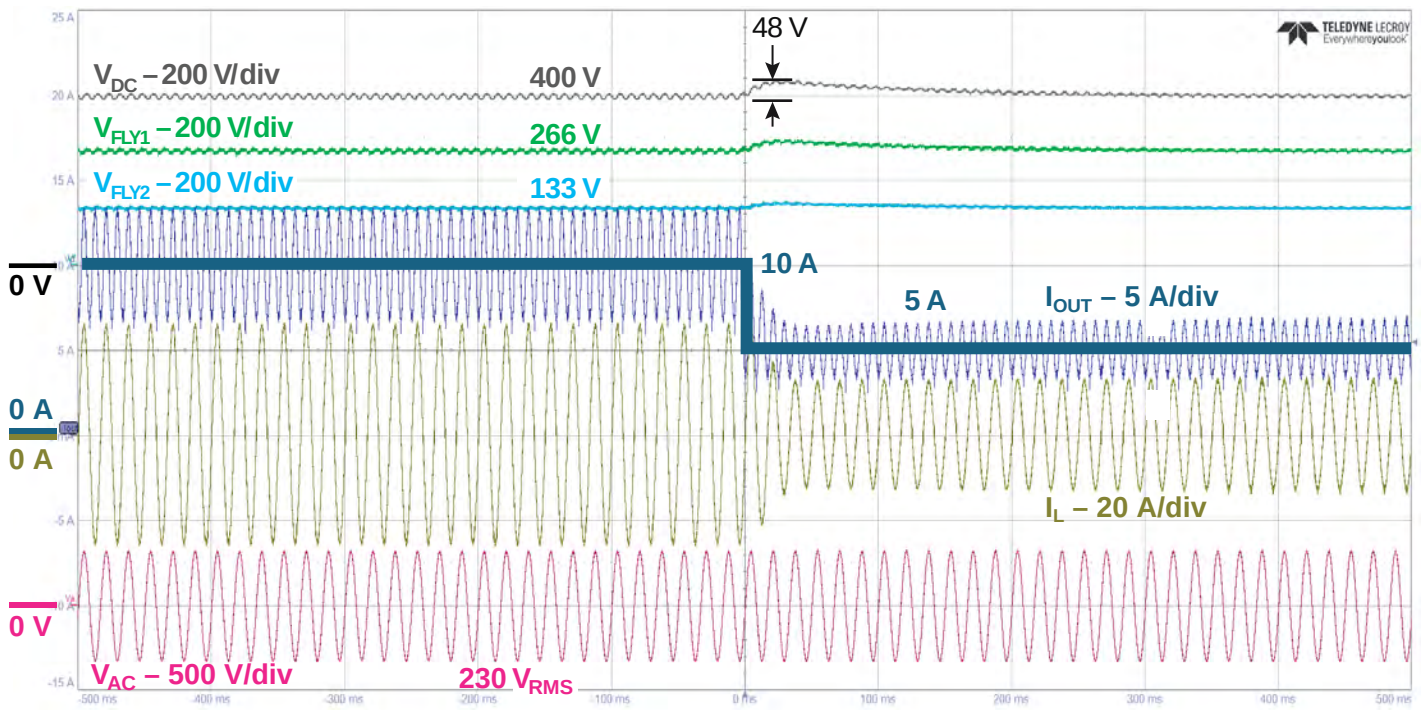

Figure 30: Load step response waveforms 10 A to 5 A with V_{IN} = 230 V_{RMS}, V_{OUT} = 400 V_{DC}

PRECAUTIONS

The EPC91107KIT is a demonstration board configured as a four-level totem-pole PFC converter and is not tested to comply with all OCP or other standards. Please contact EPC for advanced tests to verify if the EPC91107KIT is capable of passing such tests.

Never operate the EPC91107KIT with a Microchip programmer connected to the unit. If communications to the unit is required during testing, EPC recommends using a USB isolator to prevent damage to the computer should a failure occur.

Table 4: EPC91107KIT board number versions

Board Number	EPC91107M	EPC91107P	EPC91107F
Schematic revision	2.0	1.5	1.5
PCB revision	2.0	1.0	1.0

APPENDIX

FIRMWARE ARCHITECTURE

The EPC91107KIT Power Factor Correction Converter is based on a digital control implemented via a microcontroller.

Using software to implement control offers the possibility of implementing advanced control techniques and changing parameters rapidly; moreover, the digital nature of the microcontroller allows for simpler diagnostics and unlocks communication among different systems.

In Power Electronics control applications, the focus is on fast and accurate mathematical calculations, high-speed ADCs and high-resolution PWMs; all these requirements are satisfied by DSPs (Digital Signal Processors).

In this application, a DSP from the dsPIC33 Microchip family is used.

Details

The firmware is based on a task scheduler and interrupts.

Tasks are used for administration and non-deterministic operations, while interrupt routines (ISRs) carry out the real-time control and algorithms.

The code is organized in components that communicate with each other. The main components are the Main FSM (Finite State Machine), the control ISRs, and the PLL.

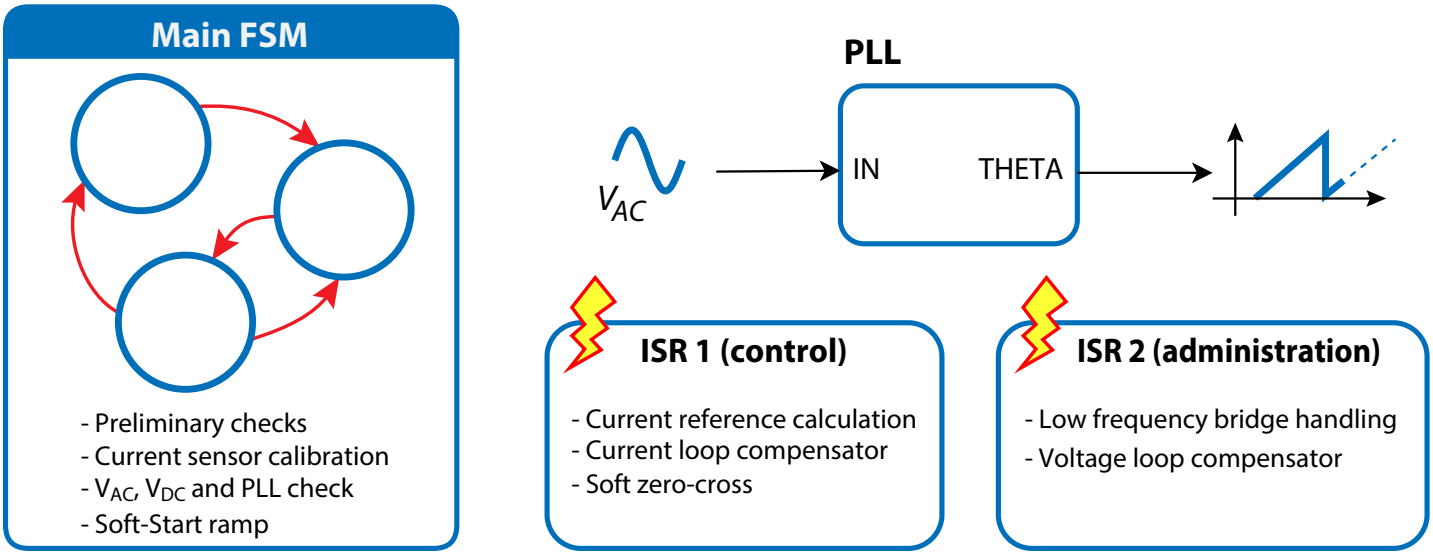

Figure 31: Firmware main components

Main FSM

The Main State Machine is executed within a cyclic task and its primary function is to manage the controller startup sequence. Specifically, it verifies that all operating conditions are met before initiating the process. Once the conditions are validated, the state machine enables the modulation and gradually ramps up the DC bus voltage (V_{DC}).

It should be noted that this description provides a high-level overview of the code. The terminology used does not necessarily reflect the actual implementation.

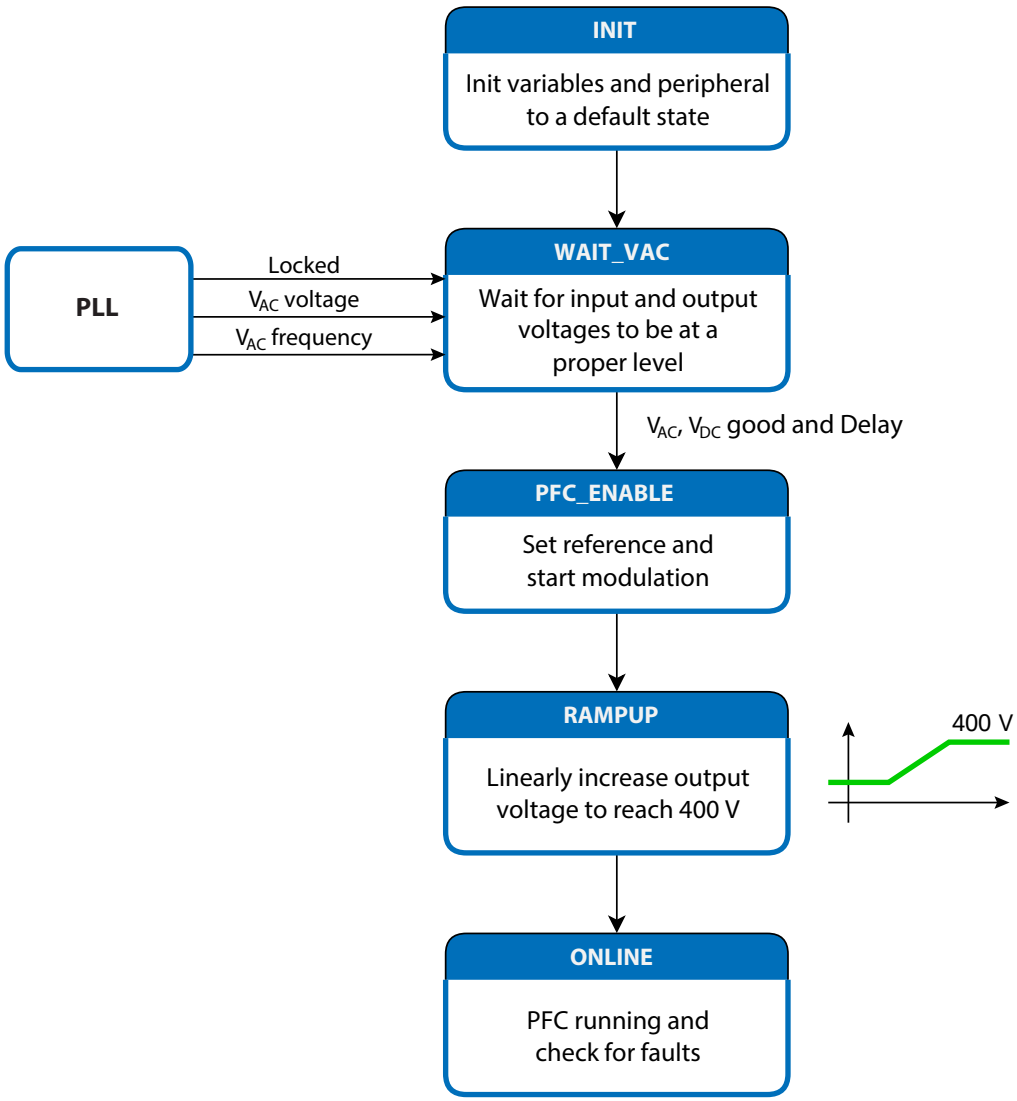

Figure 32: Main FSM's states

In the first state, "INIT", all the variables and peripherals are set to their default state.

Subsequently, the next state is reached: "CURRENT_SENSOR_CALIB". In this state the converter is still off, meaning there is no switching activity. Here the reading of the current sensor is averaged over a complete AC cycle to determine the current sensor's offset at zero load.

The next state, "WAIT_VAC", waits for the Vac to be above a set threshold, moreover, it checks that the output voltage has reached a level near the AC rectified voltage.

If these conditions are met, after a small pre-programmed delay, the FSM transitions to the "PFC_ENABLE" state. Here, the relay is closed to bypass the NTC thermistor, the output voltage reference is set, and the control and switching activities are enabled.

Initially, the voltage reference is set to the actual DC bus voltage. This is because in the next state, "RAMPUP", the reference is slowly increased to create a linear ramp on the output voltage until it reaches its final reference value of 400 V.

This is achieved because the state machine is executed cyclically, so the reference is updated with every cycle. Once the ramp is complete, the low-frequency MOSFET bridge (LF bridge) is enabled, and the state machine transitions to the "ONLINE" state. In this final state, the "fault" bit is continuously checked. If it is set to true, the state machine resets to the initial state.

PLL (Phase-Locked Loop)

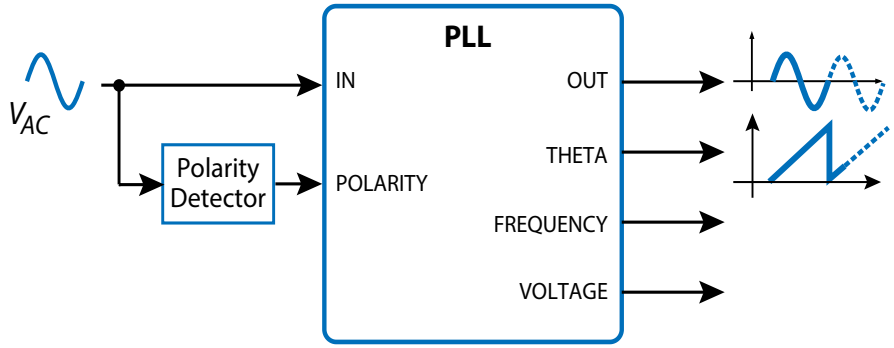

Figure 33: PLL block diagram

The PLL (Phase-Locked Loop) is a functional block of the PFC.

The main job of the PLL is to determine the corresponding angle of the input sinusoid —the AC line signal in this case—and reconstruct the signal based on that angle. Furthermore, it also provides the frequency of the input signal and its voltage characteristics.

The angle of the sinusoid refers to the angle "theta" passed to the "sin(θ)" function as an argument; therefore, the span from 0° → 360° corresponds to one period of the sinusoid.

Knowing the angle is extremely important because it allows us to define events and temporal windows relative to the input signal.

For example, two regions (Figure 33) are defined around the zero-crossing of the AC signal. The more stringent region is used to stop any modulation activity on the GaN FETs (HF bridge); essentially switching off the PFC. The larger area is where the low-frequency rectifying MOSFETs (LF bridge) are turned off.

These regions are needed to avoid any short-circuit between the input and the output, and thanks to the use of a PLL, we can keep these regions as short as possible, improving iTHD and efficiency.

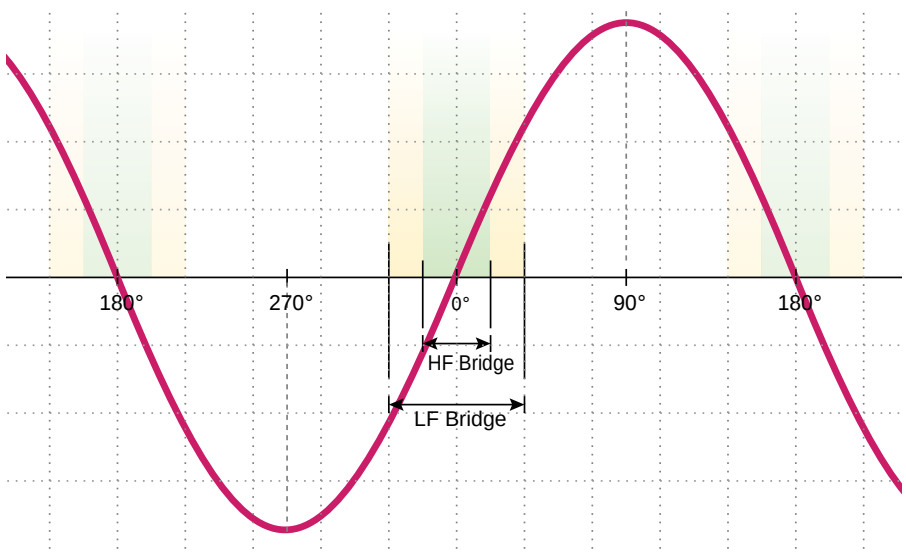

Figure 34: Zero-crossing regions defined through the use of the PLL

The advantage of using a PLL is that it works like a filter, so it is immune to digital noise on both the "grid_polarity" signal and to eventual spike or noise on the AC signal. This results in a much more robust system.

The synthetic sinusoid is used as a reference for both the feedforward calculation and the current control loop.

The PLL algorithm runs in a task every 1 ms (1 kHz), while the angle is continuously available through a CCP (Capture/Compare/PWM) peripheral counter. Using a CCP gives the possibility to generate interrupts at specific counter values, which is perfect for generating events and windows based on the sinusoid angle.

ISRs (Interrupt Service Routines)

ISRs are the places where the control laws are applied.

Current and voltage compensators must adhere to extremely tight timing constraints to function correctly.

These ISRs are called periodically, always with the same period. These routines must be executed with precise timing, as even a minor temporal drift would lead to errors in the control loops, compromising system stability and performance.

The PWM frequency dictates the period of the ISRs. PWM timers trigger the ADCs at a specific point in time and, as the ADCs finish the conversions, the ISRs are triggered.

The ISRs run once every two PWM cycles, achieving a resulting frequency of 70 kHz, which is half that of the PWM. This has been done to leave room for future improvements.

Figure 35 shows the timing relationship between PWMs, ADCs, and ISRs.

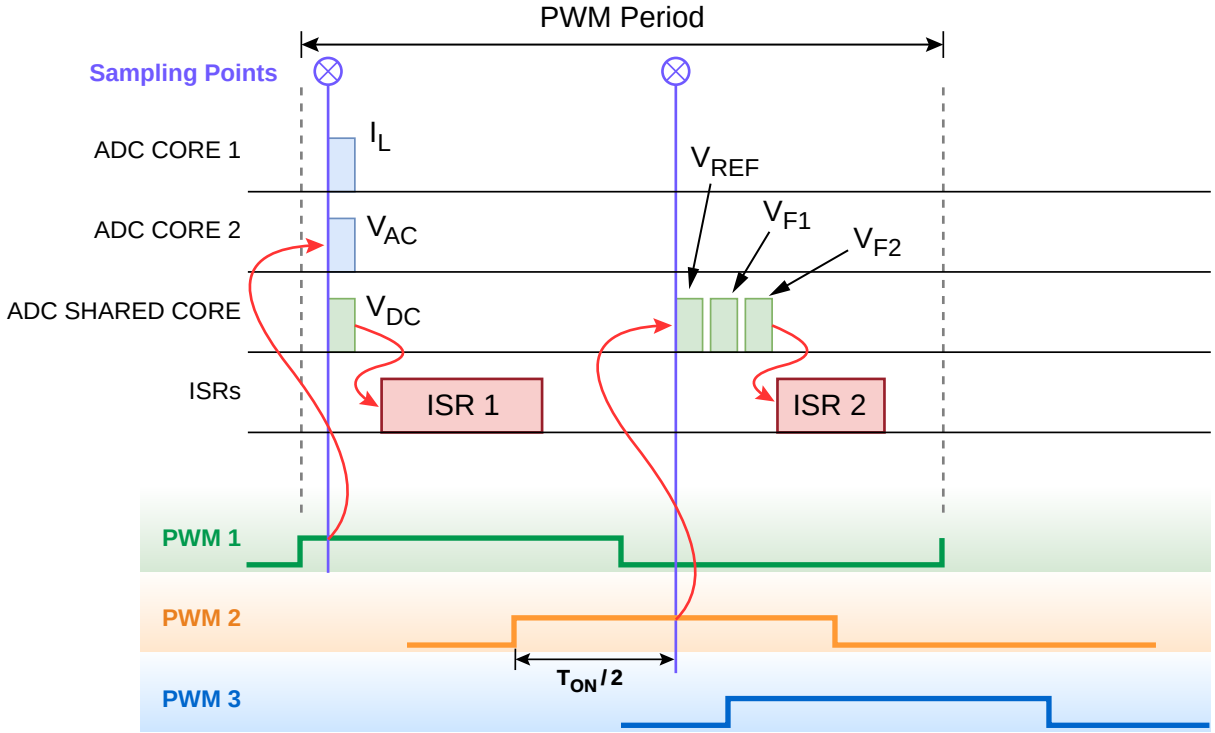

Figure 35: ADC, PWM, and ISR timing diagram

Usually, in average-current control, the inductor current is sampled at Ton/2; in this case, it is sampled soon after PWM1 is triggered, since the inductor current signal is already filtered.

In the implemented control architecture, two distinct Interrupt Service Routines (ISRs) are employed.

The first ISR is responsible for executing the high-speed algorithms, such as the current control loop, and effectively establishes the system time base — i.e., the temporal resolution of the entire control framework.

The second ISR manages supervisory functions and slower algorithms, including the voltage control loop that runs at every zero-crossing (100 Hz).

The flowcharts of the two ISRs are presented in Figure 36.

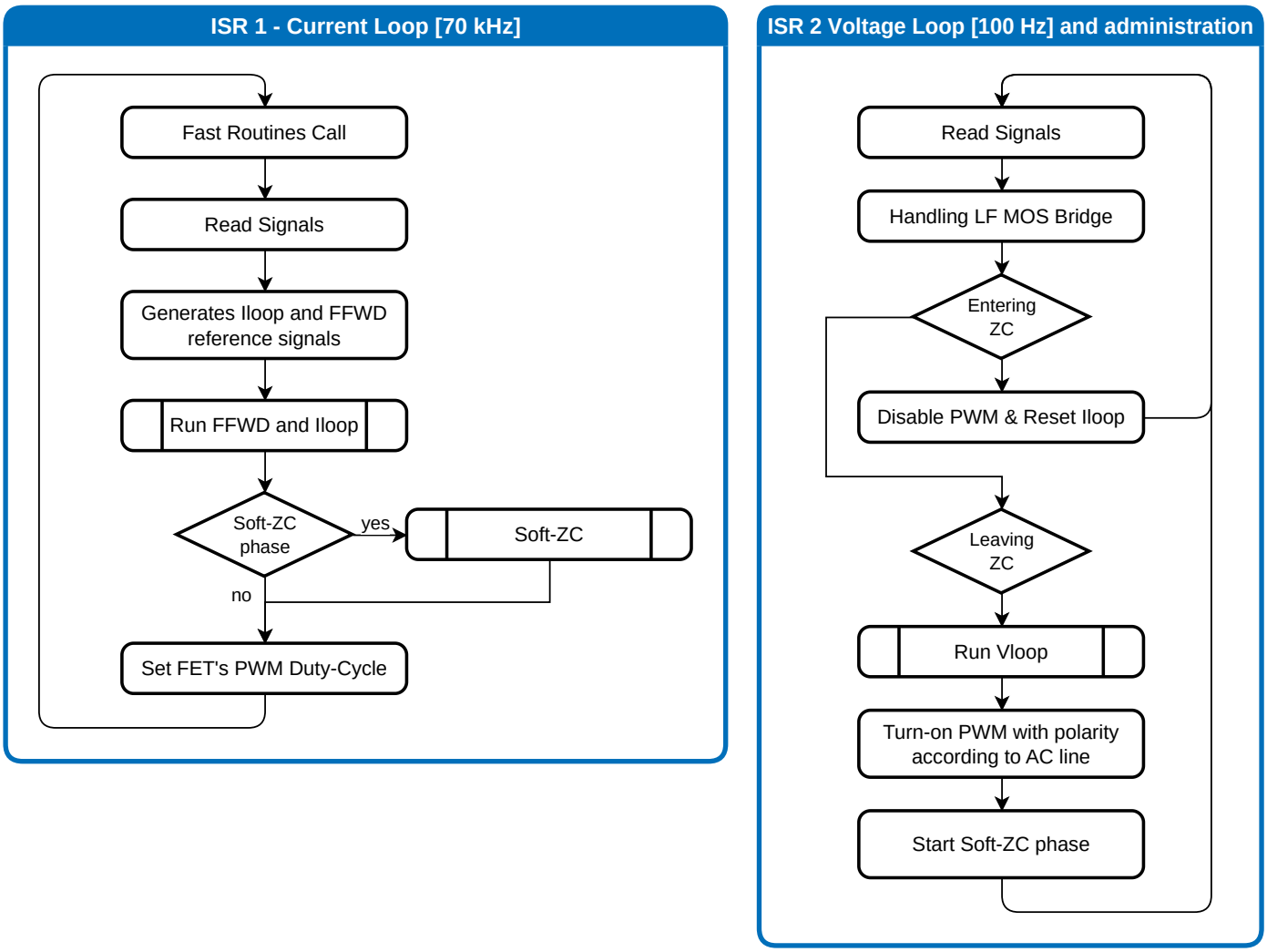

Figure 36: Flow charts of the two ISRs

The current and voltage control loops are designed using Microchip MPLAB™ PowerSmart™.

This tool enables the user to select the control architecture and its parameters while viewing the compensator frequency response in a Bode diagram. Once the design is complete, the tool automatically generates the C code and assembly routines that implement the control algorithm.

Soft Zero-Crossing (Soft-ZC) Algorithm

One drawback of the Totem-Pole topology is the current spike that occurs during polarity reversal, when the low-frequency bridge switches its state. The residual charge stored in the body diode of the conducting MOSFET is released into the inductor, causing a current spike.

This mechanism negatively affects both efficiency and THD.

To address this issue, a technique called Soft-ZC has been implemented to discharge the body diode of the MOSFET. With this method, modulation is temporarily applied only to the GaN FETs opposite to the MOSFET that was conducting. The modulation ramps up linearly until it reaches the feedforward level. At that point, normal modulation resumes, and the low-frequency bridge is switched on. This marks the end of the Soft-ZC phase, which occurs at every zero-crossing, both positive and negative.

Fault Handler & Protections

In the proposed PFC architecture, two complementary protection mechanisms are implemented to ensure system safety and reliability:

- **Fault Handler** – a relatively slower mechanism, implemented in a task, designed to manage more complex fault conditions and provide coordinated recovery strategies.
- **Cycle-by-Cycle Protections** – fast-acting safeguards implemented at the interrupt level, aimed at preventing damage by reacting within a single switching cycle.

The following list summarizes the available protections, grouped by category:

- **Cycle-by-Cycle** protections
  - Input Overcurrent - ADC comparator on input current sample (threshold set in software)
  - V_{FLY} Overvoltage - ADC comparator on flying capacitors voltages samples (threshold set in software)
- **Fault-Handler**
  - **Input Voltage** (V_{AC}) **RMS UVLO** (Undervoltage Lock-Out)
    - Trip Threshold: 190 V
    - Trip Delay: 40 ms
    - Recovery Threshold: 200 V
    - Recovery Delay: 100 ms
  - **Input Voltage** (V_{AC}) **RMS OVLO** (Overvoltage Lock-Out)
    - Trip Threshold: 254 V
    - Trip Delay: 40 ms
    - Recovery Threshold: 234 V
    - Recovery Delay: 100 ms
  - **Output Voltage** (V_{DC}) **OVLO** (Overvoltage Lock-Out)
    - Trip Threshold: 440 V
    - Trip Delay: 1 ms
    - Recovery Threshold: 430 V
    - Recovery Delay: 5 ms

In addition to the protections listed above, component-specific fault conditions are also monitored. For instance, an out-of-sync or malfunction in the PLL immediately triggers a fault response, resulting in the shutdown of the PFC operation.

For support files including schematic, Bill of Materials (BOM), and gerber files please visit the EPC91107KIT landing page at: https://epc-co.com/epc/Products/Demo-Boards/EPC91107

ACKNOWLEDGEMENTS

EPC would like to acknowledge Microchip Technology Inc. (**www.microchip.com**) for their support of this project. Microchip Technology Incorporated is a leading provider of smart, connected and secure embedded control solutions. Its easy-to-use development tools and comprehensive product portfolio enable customers to create optimal designs, which reduce risk while lowering total system cost and time to market. The company's solutions serve customers across the industrial, automotive, consumer, aerospace and defense, communications and computing markets. The EPC91107KIT demonstration board features the dsPIC33CK256MP506 16-Bit Digital Signal Controller with High-Speed ADC, Op Amps, Comparators and High-Resolution PWM. Learn more at **www.microchip.com**.

DOCUMENT HISTORY

Updated: 3 October 2025

Initial release: 21 May 2025

For More Information:

Please contact **info@epc-co.com**
or your local sales representative

Visit our website:
www.epc-co.com

Sign-up to receive
EPC updates at
bit.ly/EPCupdates

EPC
EFFICIENT POWER CONVERSION

DigiKey

EPC Products are distributed through Digi-Key.
www.digikey.com

Evaluation Board Notification

The EPC91107KIT is intended for product evaluation purposes only. It is not intended for commercial use nor is it FCC approved for resale. Replace components on the Evaluation Board only with those parts shown on the parts list (or Bill of Materials) in the Quick Start Guide. Contact an authorized EPC representative with any questions. This board is intended to be used by certified professionals, in a lab environment, following proper safety procedures. Use at your own risk.

As an evaluation tool, this board is not designed for compliance with the European Union directive on electromagnetic compatibility or any other such directives or regulations. As board builds are at times subject to product availability, it is possible that boards may contain components or assembly materials that are not RoHS compliant. Efficient Power Conversion Corporation (EPC) makes no guarantee that the purchased board is 100% RoHS compliant.

The Evaluation board (or kit) is for demonstration purposes only and neither the Board nor this Quick Start Guide constitute a sales contract or create any kind of warranty, whether express or implied, as to the applications or products involved.

Disclaimer: EPC reserves the right at any time, without notice, to make changes to any products described herein to improve reliability, function, or design. EPC does not assume any liability arising out of the application or use of any product or circuit described herein; neither does it convey any license under its patent rights, or other intellectual property whatsoever, nor the rights of others.