5 Joints

The purpose of this chapter is to provide guidance on the analysis of all types of joints found in aerospace applications along with basic information on structural joints, fasteners, and fit of fastener in the hole. A structural joint may be defined as those portions of the structure which serve to transfer loads from one or more structural members to one or more adjacent structural members by means of single or multiple fasteners, a bond line, a weld bead or through brazing. There is also discussion regarding a special class of joint which uses serrated plates and the forces of friction. Below is a chapter Table of Contents to aid the reader in finding the appropriate section.

Section	Title	Page
5	Joints	5-1
5.1	References and Nomenclature	5-2
5.2	Multi-Fastener Joints	5-9
5.2.1	Fastener Pattern Analysis – Rigid Pattern Analysis	5-9
5.2.2	Fastener Pattern Analysis – Elastic Distribution Analysis	5-16
5.2.3	Basic Joint Analysis	5-17
5.2.4	Joint Flexibility	5-65
5.2.5	Bushings	5-65
5.2.6	Hollow Fastener Analysis	5-69
5.3	Fittings	5-71
5.3.1	Bathtub Fitting Analysis	5-72
5.3.2	Shear-Clip Analysis	5-111
5.3.3	Rod-End Analysis	5-114
5.3.4	Beam-in-a-Socket Analysis	5-118
5.3.5	Flange Bending Strength	5-121
5.3.6	Prying Loads Analysis – Development of Fastener Loads	5-126
5.4	Lug and Clevis Fittings	5-130
5.4.1	Introduction	5-130
5.4.2	Detailed Static Analysis of Lugs in Double Shear or Clevis Fittings	5-132
5.4.3	Single Shear Lugs	5-143
5.4.4	Analysis of Configurations with Multiple Lugs	5-145
5.4.5	Lug/Clevis Pin Analysis	5-146
5.4.6	Lug/Clevis Analysis Example Problems	5-149
5.5	Tension Joint Fastener Preload	5-159
5.5.1	The Relationship between Torque and Preload	5-160
5.5.2	Calculating Bolt Tension Load and Joint Opening Load	5-163
5.5.3	Calculating Required Torque	5-166
5.6	Bonded Joints	5-169
5.7	Welded Joints	5-169
5.8	Brazed Joints	5-169
5.9	Friction Joints	5-169
5.9.1	Smooth Friction Joints	5-169
5.9.2	Rough Friction Joints	5-170
5.9.3	Required Assembly Torque	5-176

This chapter supersedes the equivalent sections of the Lockheed Martin Stress Memo manual (SMM - SM01f, SM07f, SM41a, SM56b, SM 65d, SM66, SM72c, SM79, SM88a, SM89b, 92a, 129a and 133) and the General Dynamics Structural Analysis Manual (GDSAM Section 14). Where specific reference is made to sections within the SMM or the GDSAM those sections are still pertinent and valid. Additional criteria and guidance can generally be found in program specific documents.

Copyright 2017 Lockheed Martin Corporation.
Note: The current version is always the version on the Lockheed Martin network.

5.1 References and Nomenclature

5-1. anon., *Lockheed Martin Engineering Stress Memo Manual*, Lockheed Martin Aeronautical Systems, Marietta, GA (October 1998 Release; April 2002 Revision).

5-2. anon., *Structures Analysis Manual, Volume 1 and 2*, General Dynamics Convair and Space Structures Divisions (1988).

5-3. Staff, *LTV Structures Manual*, LTV Aircraft Products Group, Grand Prairie, TX (June 1989 Revision).

5-4. anon., "Metallic Materials and Elements for Aerospace Vehicle Structures," MIL-HDBK-5[1], Battelle Memorial Institute, Secretariat (2001).

5-5. Staff, "PM4056 Composite Structural Analysis Manual," Lockheed Martin Aeronautical Systems, Ft. Worth, TX

5-6. anon., "ASM Handbooks Online", Granta Design Limited, http://products.asminternational.org/hbk/index.jsp (2007)

5-7. Hoblit, F.M., "Structural Analysis of Control Rods", LR6757, Lockheed California, (December 1948).

5-8. Cornell, B.L., "Joint Fatigue Analysis Fastener Load - Transfer Method", SMN 389, Lockheed Georgia Company, Marietta, GA, (April 1975).

5-9. Yu, T.F., "User's Manual for Composite Analysis Programs," LR 31209, Lockheed California Company, Burbank, CA (January 1998).

5-10. Flansburg, L.K., "Derivation of Equations for Fastener Pattern Analysis: Rigid and Elastic" FZM9014, Lockheed Martin Aeronautics, Ft. Worth, TX, (December 2004).

5-11. Kulak, Geoffry L. et. al., *Guide to Design Criteria for Bolted and Riveted Joints*, American Institute of Steel Construction, Chicago, IL. (2001)

5-12. Bickford, John H., *An Introduction to the Design and Behavior of Bolted Joints*, Third Edition, Marcel Dekker, Inc, New York, NY. (1995)

5-13. Melcon, M.A., "Derivation of Formulas", LR2072, Lockheed Aircraft Company, Burbank, CA (1946)

5-14. Flansburg, L.K. "Derivation of Parameters for Fastener Analysis", FZM9379, Lockheed Martin Aeronautics, Ft. Worth, TX (Dec 2007)

5-15. Bruhn, E.F., et. al., Analysis and Design of Flight Vehicle Structures, S.R. Jacobs & Associates, Indianapolis, IN, 1973.

5-16. Peery, David and Azar, Aircraft Structures, McGraw Hill Book Co., New York, NY, 1950

5-17. Flansburg, L.K., "Derivation of Parameters and Curves for Tension Fitting Analysis, FZM8880, Lockheed Martin Aeronautics, Ft. Worth, TX, (Feb 2004).

5-18. Mueller, B, et.al., "F-35 Structural Analysis Methods and Design Criteria (SAMDC), Section 7 Analysis Methods," 2ZSB00001, Rev E., Ft Worth, TX, 2006

5-19. Ekvall, J.C., "Static Strength Analysis of Pin Loaded Lugs," LR30772, Lockheed California Company, Burbank, CA (October 1984).

5-20. Malone, R.L., "Lug Analysis and Substantiation," LR31377, Lockheed Aeronautical Systems Company, Burbank, CA (February 1988).

5-21. Hoblit, F.M and Melcon, M.A., "Developments in the Analysis of Lugs and Shear Pins," Product Engineering, June 1953.

5-22. Hartmann, E.C. and Wescoat, C., "The Shear Strength of Aluminum Alloy Driven Rivets as Affected by Increasing D/t Ratios," NACA TN 942, National Advisory Committee for Aeronautics, Washington, D.C., July 1944.

5-23. Beardmore, R., "Coefficients of Friction Table", http://www.roymech.co.uk/Useful_Tables/Tribology/co_of_frict.htm, (2013)

5-24. Faupel, J.H., Engineering Design, John Wiley and Sons, New York, NY (1964)

[1] In 2003, MIL-HDBK-5 was superceded by the Metallic Materials Propeties Development and Standardization (MMPDS) Handbook, Battelle Memorial Institute, Secreteriat (2003)

Copyright 2017 Lockheed Martin Corporation.
Note: The current version is always the version on the Lockheed Martin network.

5-25. Anon.,"Threaded Fasteners – Tightening to Proper Tension", MIL-HDBK-60, Defense Industrial Supply Center, Philadelphia, PA, (March 1990).

5-26. Shigley, J. E and Mitchell, L., *Mechanical Engineering Design*, Fourth Edition, McGraw-Hill, New York, NY, (1983)

5-27. Anon, "Nut, Self Locking, 250°F, 450°F, and 800°F," MIL-N-25027G, Defense Industrial Supply Center, Philadelphia, PA, (February 1994).

5-28. Henderson, G.W, "Torque Tension Relationships for Lubricated and Unlubricated Aircraft Fasteners," 16PR2454, General Dynamics Fort Worth Division, Ft Worth, TX (September 1982)

5-29. Berggren, B.D., "A Method for Deriving Fastener Standard Torque Tables", Lockheed Martin Aeronautics Company, Ft. Worth, TX, (April 2002 unpublished).

5-30. Reed, C.L., "Investigation of Grooved Washers Used in Lap Joints," LR5384, Lockheed Aircraft Corporation, Burbank, CA, 1945.

5-31. Grebe, H.W., "Preliminary Tests – Special Methods of Attachment For Shear Transfer," LR5650, Lockheed Aircraft Corporation, Burbank, CA, 1946.

5-32. Dow, N, et. al., "Effect of Variation in Rivet Diameter and Pitch on Average Stress at Maximum Load for 24S-T3 and 75S-T6 Aluminum-Alloy Flat Z-Stiffened Panels that Fail by Local Instability," NACA TN 2139, Washington DC, June 1950

5-33. Dow, N, et. al., "Effect of Variation in Rivet Strength on Average Stress at Maximum Load for Aluminum Alloy Flat Z-Stiffened Compression Panels that Fail by Local Buckling," NACA TN 2963, Washington DC, June 1953

Symbol	Definition	Units	Applicable Section
a, b	Lengths	in	5.3
A, A_i	Area	in^2	
A_{br}	Bearing Area	in^2	
A_{ci}	Equivalent cylindrical area	in^2	5.5
A_g	Gross Area	in^2	
A_{thd}	Area of fastener at threads	in^2	
A_{tooth}	Area of an individual serration	in^2	5.9
a_1,a_2	Distance along beam	in	5.3
B	Width	in	5.3
b_1,b_2	Distance along beam	in	5.3
b_x,b_y	Lug ligament in the lug x and y directions	in	5.4
c	Distance from centroid to free edge	in	
c	Distance from the center of the hole to the edge of the lug or clevis along the load line	in	5.4
c	Bolt-to-hole diametric clearance	in	5.2
d, d_A, d_B	Lengths	in	5.3
d_x, d_y	Distance from end-pad hole center to edge at wall or base of fitting	in	5.3
$D_{1\text{-large}}$	Effective diameter of the largest hole in the first row	in	5.2.3
D, D_i	Diameter of bolt hole	in	
D_{bolt}	Diameter of bolt	in	
D_{pin}	Diameter of pin	in	
D_{pitch}	Pitch diameter of bolt	in	
e	Distance from hole to edge of part	in	
e	Distance from the center of the hole to the edge of the part in the lug or clevis x direction	in	5.4
e_{lug}, e_{clevis}	elongation of the lug or clevis material	in/in	5.4
e_o	material elongation	in/in	

Copyright 2017 Lockheed Martin Corporation.
Note: The current version is always the version on the Lockheed Martin network.

Symbol	Definition	Units	Applicable Section
e_{ptu}	Plastic Strain at Ultimate Stress	in/in	
e_u	Strain at Ultimate Stress	in/in	
E	Modulus of Elasticity	psi	
f_b	Applied bending stress	psi	5.3
$f_{b\text{-base edge}}$	Applied bending stress at the free edge of fitting base	psi	5.3
$f_{b\text{-clamp-up}}$	Applied bending stress in clevis tang due to clamp up	psi	5.4
$f_{b\text{-end-pad}}$	Applied bending stress in end pad	psi	5.3
$f_{br\text{-limit}}$	Applied bearing stress at limit	psi	
$f_{b\text{-misalignment}}$	Applied bending stress in clevis tang due to misalignment of load line	psi	5.4
$f_{br\text{-ult}}$	Applied bearing stress at ultimate	psi	
$f_{b\text{-wall edge}}$	Applied bending stress at the free edge of fitting wall	psi	5.3
f_o	trapezoidal intercept stress	psi	
f_t	Applied tension stress	psi	
f_s	Applied shear stress	psi	
$F_{bry\text{-ALLOW}}$	Bearing Yield Allowable (adjusted for wet pin)	psi	
F_{bru}	Ultimate allowable bearing stress reported in Reference 5-4	psi	
$F_{bru\text{-ALLOW}}$	Bearing Ultimate Allowable (adjusted for wet pin)	psi	
$F_{cy\text{-x}}$, $F_{cy\text{-y}}$, $F_{cy\text{-z}}$	Compression yield stress material property given in lug or clevis x, y and z directions	psi	5.4
$F_{ty\text{-x}}$, $F_{ty\text{-y}}$, $F_{ty\text{-z}}$	Yield tensile stress material property given in lug or clevis x, y and z directions	psi	5.4
$F_{sy\text{-xy}}$, $F_{sy\text{-yz}}$, $F_{sy\text{-zx}}$	Yield shear stress material property given in lug or clevis x, y and z directions	psi	5.4
$F_{sy\text{-allow}}$	Allowable shear yield stress	psi	5.4
F_{su}	Ultimate shear stress material property	psi	
F_{ty}	Yield tension stress material property	psi	
$F_{ty\text{-x}}$, $F_{ty\text{-y}}$, $F_{ty\text{-z}}$	Yield tensile stress material property given in lug or clevis x, y and z directions	psi	5.4
F_{tu}	Ultimate tension stress material property	psi	
$F_{tu\text{-x}}$, $F_{tu\text{-y}}$, $F_{tu\text{-z}}$	Ultimate tension stress material property given in lug or clevis x, y and z directions	psi	5.4
h	Height from free edge to middle of wall or base	in	5.3
h_{nom}	Nominal (arithmetic mean) height of serration tooth	in	5.9
H, H_{wall}	Total height	in	5.3
H_{nut}, H_{head}	Height of nut and head of fastener	in	5.5
g_{max}	maximum gap between clevis and lug	in	5.4
i, j, k	Unit vectors	---	
IDAT/FDB	Integrated Detail Analysis Tool / Fastener Database		
I_{xx}	Area moment of inertia about the x-x axis	in^4	5.3
I_{yy}	Area moment of inertia about the y-y axis	in^4	5.3
k	Plastic Bending Section Factor : k=[2Q/(I/c)]	---	
k_b	Bolt stiffness in bolt bending calculation	lb/in	5.5
k_j	Plate stiffness in bolt bending calculation	lb/in	5.5
K_1	Semi-circular bathtub end-pad analysis stress factor	---	5.3
K_a	Channel fitting end-pad analysis stress factor to account for aspect ratio	---	5.3
K_{DF}	Dynamic Factor	--	

Copyright 2017 Lockheed Martin Corporation.
Note: The current version is always the version on the Lockheed Martin network.

Symbol	Definition	Units	Applicable Section
K_{dist}	K_{dist} is the factor describing the distribution of axial loading between the two clevis legs.	--	
K_e	Channel fitting end-pad analysis stress factor to account for eccentricity of loading	---	5.3
K_{fix}	Semi-circular bathtub end-pad analysis stress factor to account for wall fixity	---	5.3
K_{ftg}	Fitting factor	---	
K_{geom}	Factor accounting for geometry effects in combined margin of safety calculations for plastic bending: $K_{geom}=Ac/2Q_m$	---	
K_{nut}	Factor for calculating effects of torque on preload	--	
K_{pct}	Factor for percent of yield strength in bolt bending calculations	---	5.5
K_r	Channel fitting end-pad analysis stress factor to account for the variation in load application area	---	5.3
k_{rdc}	Load factor necessary to make the left hand terms of the equation equal to 1 for iterative numerical solution	---	5.2
K_{yld}	Factor applied to limit load for yield analysis	---	
L	Longitudinal grain direction material properties	---	5.4
L	Distance between serration teeth	in	5.9
L_1, L_2	Beam lengths	in	5.3
L_{arm}	Moment Arm used in Bolt and Pin Bending Calculations	in	
L_{shank}	Grip length of bolt	in	5.5.1
LF	Lug Service Factor	---	5.4
L_{gap}	Total Thickness of Any Shim or Gap between joint layers	in	5.2.3
L_{se}	Equivalent length of bolt shank including some portion of head.	In	5.5.1
L_{shear}	Shear Ligament	in	
L_{tang}	Length of tang from center of fastener to reaction at base	in	5.4
m, m_{appl}	Applied moment (elastic)	in-lb	
$(mc/I)_b$	Modulus of Bending	psi	
$m_{plastic}$	Applied moment (plastic)	in-lb	5.3
m_{xx}, m_{yy}	Moment about the x-x and y-y axes, respectively	in-lb	5.3
M_a, M_c	Moments at ends A and C of beam	in-lb	5.3
M'_a, M'_c	Reduced moments at ends A and C of beam	in-lb	5.3
$M_{allow-ult}$	Ultimate moment allowable	in-lb	
$M_{allow-yield}$	Yield moment allowable	in-lb	
M_c	Moments at centroid of rigid fastener pattern	in-lb	5.2
$\mathbf{M}_{center}$	Moment vector at centroid of rigid fastener pattern	in-lb	5.2
M.S.	Margin of Safety	---	
n	Number of fasteners	---	
n_t	Modified Ramberg Osgood stress strain curve shape parameter		
N	Fastener pitch (number of threads per inch)	tpi	5.5
N	Number of serration teeth per inch	tpi	5.9
Nx, Ny	In-plane applied running load	lb/in	
N_{xy}	In-plane applied running shear load	lb/in	
P, P_1, P_2	Applied load	lbs	
P	Applied load vector	lbs	5.2
$P_{ALLOW-joint}$	Allowable Fastener Load based on Fastener Allowable tables. Failure mode may be due to sheet or fastener failure.	lbs	

Copyright 2017 Lockheed Martin Corporation.
Note: The current version is always the version on the Lockheed Martin network.

Symbol	Definition	Units	Applicable Section
$P_{allow\text{-}reduced}$	Allowable fastener load which has been reduced by loose hole factor, as appropriate	lbs	
$P_{ALLOW\text{-}shear}$	Allowable Fastener Load based on Fastener Shear	lbs	
$P_{ALLOW\text{-}tension}$	Allowable Fastener Load based on Fastener Tension	lbs	
$P_{applied}$	Applied fastener load – external + induced	lbs	
P_{bi}	Bolt preload	lbs	
P_{bolt}	Applied Fastener Shear Load Resultant	lbs	
$P_{bolt\text{-}limit}$	Applied Total Limit Fastener Shear Load Resultant	lbs	5.2
$P_{bolt\text{-}tension}$	Applied Total Ultimate Fastener Axial Tension Load	lbs	5.2
$P_{bolt\text{-}ultimate}$	Applied Total Ultimate Fastener Shear Load Resultant	lbs	5.2
$P_{bolt\text{-}ultimate\text{-}edge}$	Applied Total Ultimate Fastener Shear Load Perpendicular to the Edge of Part	lbs	5.2
$P_{brg\text{-}allow}$	Allowable lug or clevis bearing load	lbs	
$P_{br\text{-}yield}$	Allowable Fastener Load based on Bearing Yield	lbs	
$P_{br\text{-}ult}$	Allowable Fastener Load based on Bearing Ultimate	lbs	
P_{clamp}	Preload remaining in joint after relaxation due to embedment and external loading	lbs	
$P_{LugStrength}$	Minimum allowable lug or clevis load	lbs	
$P_{net\text{-}shear}$	Allowable Fastener Load based on Net Section Shear	lbs	
$P_{net\text{-}tension}$	Allowable Fastener Load based on Net Section Tension	lbs	
P_{open}	Load at which a tension joint separates	lbs	
$P_{pinbending}$	Allowable pin bending load	lbs	
P_s	Applied Total Ultimate Joint Load due to In-Plane Shear	lbs	5.2
P_t	Applied Total Ultimate Joint Load due to In-Plane Tension Load	lbs	5.2
$P_{tearout}$	Allowable Fastener Load based on shear tearout	lbs	
$P_{tension}$	Externally applied axial bolt tension load	lbs	
$P_{thermal}$	Bolt axial load due to thermal expansion	lbs	5.5
$P^{pos}_{thermal}$, $P^{neg}_{thermal}$	Bolt axial load due to thermal expansion where positive value is additive to bolt axial tension load and negative value is relieving of bolt preload	lbs	5.5
$P_{t\text{-}moment}$	Axial tension load induced in fastener due to head prying under bolt bending loads	lbs	
P_x, P_y	Applied load component in the x and y axes	lbs	
Q	First or Static Moment of Area about the Principle Axis of the Area Between the Principle Axis and the Extreme Fiber.	in^3	
r	Magnitude of Vector perpendicular to applied load vector between applied load and reaction fastener pattern.	in	5.2.1
r_i, $r_{bolt\text{-}i}$	Bolt hole radius	in	5.3
r_o, $r_{bolt\text{-}o}$	Bolt head radius	in	5.3
$R_{1:all}$	Reduction in cross-sectional area due to all fasteners in the first row.	in^2	5.2.3
$R_{1:5D}$	Reduction in cross-sectional area due to all fasteners with in 5D of the first row.	in^2	5.2.3
R	Root Radius	in	5.9
R_a	Average radius of semicircular bathtub fitting	in	5.3
R_a, R_b, R_c	Reactions at beam locations A, B, and C	lbs	5.3
R_{area}	The Effective Reduction in Cross-Sectional Area due to Fasteners	in^2	5.2.3

Copyright 2017 Lockheed Martin Corporation.
Note: The current version is always the version on the Lockheed Martin network.

Symbol	Definition	Units	Applicable Section
R_b	Stress ratio of applied bending moment to allowable bending moment at ultimate	---	5.3
$R_{b\text{-}ALLOW}$	Allowable Bending Moment Ratio from Figure 6.3.6-2	---	
$R_{b\text{-}yield}$	Stress ratio of applied bending moment to allowable bending moment at yield	---	5.3
$\mathbf{R}_D$	Direct Reaction Vector	lbs	5.2.1
R_D	Reaction force at fastener due to $\mathbf{R}_D$	lbs	5.2.1
R_e	Reduction factor due to low elongation	---	5.4
R_{fillet}	Fillet radius	in	5.3
R_i	Inner radius of semicircular bathtub fitting	in	5.3
R_{large}	Reduction in cross-sectional area due to the largest fastener in the first row.	in^2	5.2.3
$\mathbf{R}_M$	Force Reaction Vector due to Moment	lbs	5.2.1
R_M	Reaction force at fastener due to $\mathbf{M}_c$	lbs	5.2.1
R_o	Outer radius of semicircular bathtub fitting	in	5.3
R_s	Stress ratio of applied shear stress to allowable shear stress or applied shear load to allowable shear load	---	
R_t	Stress ratio of applied tension stress to allowable tension stress or applied tension load to allowable tension load	---	
$R_{t\text{-}ALLOW}$	Allowable Stress or Load Ratio from Figure 6.3.6-2	---	
s	Fastener spacing	in	
S	Short grain direction material properties		5.4
S	Distance between adjacent serrations	in	5.9
s_{col}	Spacing of fastener columns in a multiple column joint	in.	
s_{row}	Spacing of fastener rows in a multiple row joint	in.	
t	Thickness	in	
t	unit vector		5.2.1
T	Transverse grain direction material properties		5.4
T	Applied bolt torque	in-lb	5.2, 5.5
T_{instl}	Temperature at time of installation or assembly	°F	5.5
T_{lock}	Locking torque – that portion of the torque required to engage locking feature of nut	in-lb	5.2, 5.5
T_{op}	Temperature at steady state operational levels	°F	5.5
T_r	Residual torque – that portion of the torque resulting in fastener preload	in-lb	5.2, 5.5
t_b	Thickness of the fitting base	in	5.3
t_{bolt}	Bolt thickness. For solid bolts or pins t_{bolt} is half the bolt diameter	in	
t_{brg}	Minimum thickness to just react bolt load in bearing	in	5.2.3
t_{clevis}	Thickness of single clevis leg	in	5.4
t_e	Thickness of the fitting end pad	in	5.3
t_{load}	Distance between load planes of all layers	in	5.5.2
t_{lug}	Thickness of the lug	in	5.4
t_r	Remaining thickness below serration	in	5.9
t_{tang}	Thickness of clevis tang	in	5.4
t_{total}	Total stack-up of joint	in	5.5.2
t_w	Thickness of the fitting wall	in	5.3
u	unit vector	---	5.2.1
u	uncertainty factor	---	

Copyright 2017 Lockheed Martin Corporation.
Note: The current version is always the version on the Lockheed Martin network.

Symbol	Definition	Units	Applicable Section
U	Number of Full serrations	--	5.9
U_{tb}	Tension Bending Interaction Factor	---	
w	width	in	
w_{eff}	effective width	in	
$w_{b\text{-}fas}$	The distributed applied fastener load at location b	lb/in	5.3
w_{tang}	Width of the clevis tang	in	5.4
x	Half width of the serration tooth at the critical section	in	5.9
x, y	location	in	
x'	Half width of the gap between adjacent serration teeth at the critical section	in	5.9
x_{bar}, y_{bar}	The location of the x and y centroid	in	
y_{pna}	The location of the fitting's plastic neutral axis in the y direction	in	5.3
r	Plastic bending stress interaction exponent	---	
r_p	Plastic bending stress interaction exponent for a perfectly plastic material	---	5.2.3
α	Angle applied load makes with lug x axis, positive ccw	degrees	5.4
α	Fastener thread half angle	degrees	5.2, 5.5
α	Coefficient of thermal expansion	in/in/°F	5.5
α_v	Ratio of maximum to minimum bolt preload	----	
γ	Material plasticity factor	---	
η	Net section efficiency factor	---	
μ	Static Coefficient of friction	---	
μ_{nut}	Coefficient of friction nut thread to fastener thread	---	
μ_{surf}	Coefficient of friction nut face to joint surface		
φ	Joint stiffness parameter for bolt bending		
ΔP_{bi}	Loss in preload due to joint relaxation	lbs	
ΔP_{bolt}	Incremental tension load on a preloaded bolt	lbs	
ΔP_j	Incremental relaxation of joint surfaces due to an applied external load.	lbs	
Subscripts			
center	at center of fastener pattern		
D	Direct		
hole	associated with the fastener hole		
i	where not otherwise denoted, i^{th} fastener or layer	---	
j	joint		
M	moment		
max, maximum	maximum		
min, minimum	minimum		
nom, nominal	nominal		
projected	projected to appropriate plane		
shim	associated with the shim		
total	the total of several layers		
x,y	in x and y locations respectively		

Copyright 2017 Lockheed Martin Corporation.
Note: The current version is always the version on the Lockheed Martin network.

5.2 Multi-Fastener Joints

The solution of fastener load distribution in multi-fastener joints can be handled in several ways depending on the specific configuration of the joint. If the joint being analyzed is a two dimensional, reasonably rigid structure of two layers, then a rigid fastener pattern analysis can be performed. In this type of analysis, developed in Reference 5-16, the layers being attached are fairly rigid and the fastener loads can be distributed based on the relative diameter and stiffness of the fasteners utilized. This method will be discussed in Section 5.2.1 and is used to determine fastener loads in eccentrically loaded two dimensional joints. A second type of joint analysis involves building a one dimensional spring model which represents the stiffness of the attaching structure and the fasteners as springs. Then a set of equilibrium equations for each node of the model is developed. These equations are solved simultaneously to determine load in the fasteners as well as the attaching surfaces. This type of model is generally used for axial and shear loading in a lap splice. It is developed in Section5.2.2. In addition, joints can be modeled using a finite element based approach. That approach is beyond the scope of this manual. Sections 5.2.3 through 5.2.6 will provide further details on the basic analysis of joints including fasteners, bushings and net section efficiencies of multi-fastener joints.

5.2.1 Fastener Pattern Analysis – Rigid Pattern Analysis

This section addresses the problem of an eccentrically loaded two dimensional joint as shown in Figure 5.2.1-1. This joint may have a symmetric or random fastener pattern and the problem is solved assuming that the applied loads can be distributed to the fasteners based on their relative size, location and stiffness because the plates are relatively rigid. This would not be an appropriate analysis technique for thin buckled structure or built up structure where the fastener fit might allow deflections within the structure between where the load is applied and the fasteners reacting that load. Table 5.2.1-1 discusses the limitations and assumptions of this methodology.

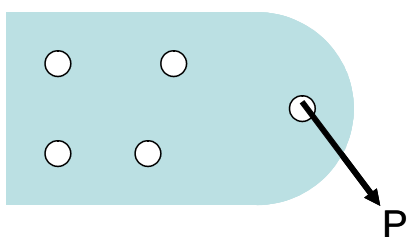

Figure 5.2.1-1 Example of a Multi-fastener Joint with an Eccentric Load

Table 5.2.1-1 Limitation of Rigid Joint Analysis Methodology

All elements of the joint are infinitely rigid bodies
Loads and reactions are in the plane of the fitting[2]
All fasteners are of similar stiffness
Fasteners have similar clearance fits [equivalent $(D-D_{fas})/D_{fas}$ ratios]
The members being joined are of similar stiffness

This type of analysis gives a reasonable approximation of the bolt loads, but it is only an approximation. A fitting factor of 1.15 is recommended for joints not tested to ultimate load, however this is governed by program and/or customer requirements.

There are several software tools available to use for analyzing these joints. The IDAT software suite includes two programs, PEERY and RIGIDBODY. The IDAT/RIGIDBODY is a full 3–D analysis tool with the capability to adjust the degrees of freedom and spring rates of the fasteners. The IDAT/PEERY method is restricted to 2–D (in-plane) fully rigid analysis.

[2] A three dimensional version of these equations can be developed

Copyright 2017 Lockheed Martin Corporation.
Note: The current version is always the version on the Lockheed Martin network.

5.2.1.1 Fastener Load Distribution

The basis of this methodology is the assumption that the applied loads can be distributed to the fasteners through a summation of forces and moments about the centroid of the fastener pattern. The fasteners must react both the direct load and the induced moment about the geometric center of the fastener pattern. This can be represented by an equivalent system of a force and a moment couple applied at the centroid of the fastener pattern. Using an example with four fasteners, this is illustrated in Figure 5.2.1-2. The force (P) is moved to the centroid of the fastener pattern and a moment about the centroid (M_C) is added to represent the rotation induced by the offset of the force from the pattern centroid.

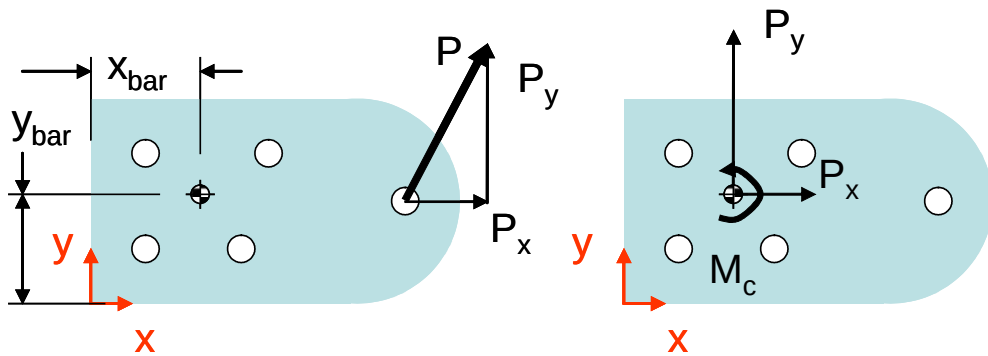

Figure 5.2.1-2 Equivalent Force and Moment System Due to Eccentric Loading on a Joint

Reference 5-10, FZM 9014, develops the equations for use in determining the fastener loads for this type of system. The direct loads, R_{Dxi} and R_{Dyi}, are given by

$$R_{Dxi} = -P_x[E_iA_i/\Sigma(E_iA_i)] \text{ for } i=1,n$$
$$R_{Dyi} = -P_y[E_iA_i/\Sigma(E_iA_i)] \text{ for } i=1,n$$

Equation 5.2.1-1

Where
P is the magnitude of the total applied load (lbs)
R_{Di} is the magnitude of the direct reaction at the ith fastener (lbs)
E_i is the Modulus of Elasticity of the ith fastener (psi)
A_i is the cross-sectional area of the ith fastener (in^2)
R_{Dxi},R_{Dyi} are the magnitudes of the direct reactions at the ith fastener in the joint x and y directions respectively. (lbs)
n is the total number of fasteners

Note that if the fasteners are of the same material, the modulus of elasticity can be eliminated from the equation and if the fasteners are all the same diameter, the equations reduce to the reaction at each fastener being the applied load divided by the number of fasteners.

To determine the moment, the centroid of the fastener pattern must be determined. They are given by

$$x_c = \Sigma(A_iE_ix_i) / \Sigma A_iE_i \quad \text{for } i=1,n$$
$$y_c = \Sigma(A_iE_iy_i) / \Sigma A_iE_i \quad \text{for } i=1,n$$

Equation 5.2.1-2

where
A_i is the area of the ith fastener (in^2)
E_i is the Modulus of Elasticity of the ith fastener (psi)
x is the distance along the x axis from the ith fastener to the origin of the x axis. (in)
y is the distance along the y axis from the ith fastener to the origin of the y axis. (in)
n is the total number of fasteners reacting the applied load.

The moment about the centroid of the fastener pattern can then be calculated from

$$M_c=[P_y(x_L-x_c)-P_x(y_L-y_c)]$$

Equation 5.2.1-3

Copyright 2017 Lockheed Martin Corporation.
Note: The current version is always the version on the Lockheed Martin network.

where positive moment is CCW
P_x, P_y is the applied load in the x and y directions, respectively.(lb)
x_c , y_c is the location of the reaction fastener pattern centroid along the x and y axis, respectively (in)
x_L, y_L is the location of the applied load along the x and y axis, respectively (in)

The fastener loads, due to the moment, can then be calculated from

$$R_{Mxi} = M_c[A_iE_i(y_i-y_c)] / \Sigma[A_iE_ir_i^2] \text{ for } i=1,n \qquad \textbf{Equation 5.2.1-4}$$
$$R_{Myi} = -M_c[A_iE_i(x_i-x_c)] / \Sigma[A_iE_ir_i^2] \text{ for } i=1,n$$

where
M_c is the magnitude of the moment about the centroid given by Equation 5.2.1-3. (in-lb)
A_i, is the area of the ith fastener (in^2)
E_i is the modulus of elasticity for the ith fasteners (psi)
r_i is the magnitude of the vector between the ith fastener and the centroid of the reacting fastener pattern (in)
x_i, y_i is the x and y coordinates of the ith fastener (in)
x_c, y_c is the x and y coordinates of the centroid of the reaction fastener pattern (in)
n is the number of fasteners in the reaction fastener pattern
R_{Mxi}, R_{Myi} are the magnitudes of the ith fastener reactions due to the moment in the x and y directions respectively (lbs)

The resultant fastener load at each location can be determined by the vector sum of the x and y loads as follows

$$P_{bolti}=[(R_{Dxi}+R_{Mxi})^2+(R_{Dyi}+R_{Myi})^2]^{1/2} \qquad \textbf{Equation 5.2.1-5}$$

where
R_{Dxi}, R_{Dyi} are fastener loads due to applied loads in the x and y direction at the ith fastener (lbs)
R_{Mxi}, R_{Myi} are fastener loads due to applied moment in the x and y direction at the ith fastener (lbs)

Once the bolt loads are determined, the typical joint analyses (bearing, net section ultimate and yield, fastener shear, etc) per Section 5.2.3, can be performed. This method can be extended to a three dimensional analysis; however this variation will not be developed in this section. Several example problems demonstrate this method in the next section.

5.2.1.2 Example Problems – Eccentrically Loaded Fastener Pattern Analysis

The first example will be a very simple four fastener joint, much like the pattern used to develop the analysis method. The second example will be similar to the first, except all fasteners will not be of the same size. The third example will be the method for an asymmetric splice plate with two loads and an applied moment.

Copyright 2017 Lockheed Martin Corporation.
Note: The current version is always the version on the Lockheed Martin network.

5.2.1.2.1 Example 1 – Four Fastener, Single Load Lug, All Bolts Same Diameter

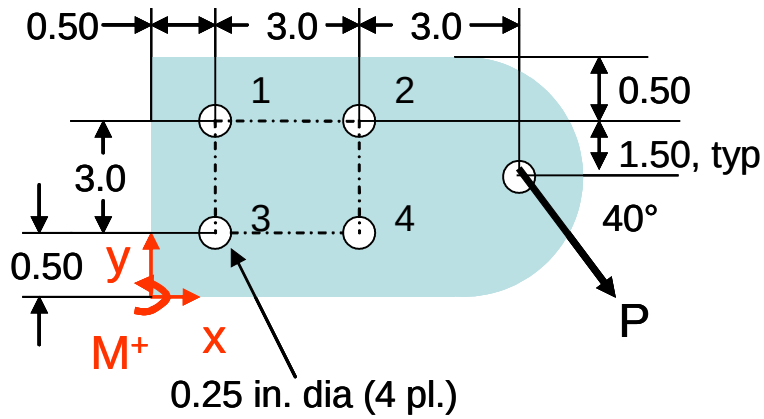

(Figure Not to Scale)

Geometry

Loading	x_L=6.5; y_L=2.0 in.				P = 1000 lbs P_x = 1000cos(-40°) = 766 lbs P_y = 1000sin(-40°) = -643 lbs		
Fastener Location and Area (All fasteners same material, E drops out)	ID	x_i	y_i	Dia (in)	A_i (in^2)	A_ix_i	A_iy_i
	1	0.50	3.50	0.25	0.049	0.0245	0.1715
	2	3.50	3.50	0.25	0.049	0.1715	0.1715
	3	0.50	0.50	0.25	0.049	0.0245	0.0245
	4	3.50	0.50	0.25	0.049	0.1715	0.0245
				Sums	0.196	0.392	0.392
Calculate Fastener Centroid	$x_{bar}=\Sigma(A_ix_i)/(\Sigma A_i)$ = 0.392/0.196 $y_{bar}=\Sigma(A_iy_i)/(\Sigma A_i)$ = 0.392/0.196				x_{bar}= 2.0 in y_{bar}= 2.0 in		
Calculate M_c	$M_c=-P_y(x_L-x_{bar})-P_x(y_L-y_{bar})$ = -643(6.5-2.0)-766(2.0-2.0)				M_c= -2894 in lbs		

Calculate the direct reactions (All fasteners same material, E drops out)	ID	$E_iA_i/\Sigma(E_iA_i)$	R_{Dxi}	R_{Dyi}
	1	0.049/0.196=0.25	-0.25(766) = -192 lbs	-0.25(-643)=162 lbs
	2	0.049/0.196=0.25	-0.25(766) = -192 lbs	-0.25(-643)=162 lbs
	3	0.049/0.196=0.25	-0.25(766) = -192 lbs	-0.25(-643)=162 lbs
	4	0.049/0.196=0.25	-0.25(766) = -190 lbs	-0.25(-643)=162 lbs

Calculate Δx_i, Δy_i, and $\Sigma(A_i\Delta r_i^2)$	ID	A_i (in^2)	$\Delta x_i=x_i-x_{bar}$	$\Delta y_i=y_i-y_{bar}$	$r_i^2 = \Delta x_i^2+ \Delta y_i^2$	$A_ir_i^2$
	1	0.049	-1.50	1.50	4.50	0.2205
	2	0.049	1.50	1.50	4.50	0.2205
	3	0.049	-1.50	-1.50	4.50	0.2205
	4	0.049	1.50	-1.50	4.50	0.2205
					Sum	0.882

Calculate the moment reactions and bolt loads	ID	$R_{Mxi} =M_cA_i\Delta y_i/\Sigma(A_ir_i^2)$	$R_{Myi} = -M_cA_i\Delta x_i/\Sigma(A_ir_i^2)$	$R_{Dxi}+R_{Mxi}$	$R_{Dyi}+R_{Myi}$	R_{bolti}
	1	-2894(0.049)(1.50) /0.882 = -242 lbs	-(-2894)(0.049)(-1.50) /0.882 = -242 lbs	-192 - 242 = -434	162 - 242 = -80	441 lbs
	2	-2894(0.049)(1.50) /0.882 = -242 lbs	-(-2894)(0.049)(1.50) /0.882 = 242 lbs	-192 - 242 = -434	162 +242 = 404	593 lbs

Copyright 2017 Lockheed Martin Corporation.
Note: The current version is always the version on the Lockheed Martin network.

	3	-2894(0.049) (-1.50) /0.882 = 242 lbs	-(-2894)(0.049) (-1.50) /0.882 = -242 lbs	-192 + 242 = 50	162 – 242 = -80	94 lbs
	4	-2894(0.049) (-1.50) /0.882 = 242 lbs	-(-2894)(0.049) (1.50) /0.882 = 242 lbs	-192 + 242 = 50	162 + 242 = 404	407 lbs
Summation in x and y				-768	648	Check

The summation in x and y should be equal and opposite the applied loads. In this case, round-off has resulted in a small error.

Once the bolt loads have been determined, margins of safety for the plates and the fasteners can be determined. In the next example, the geometry and loading are the same as for this example problem, however fastener number four has been reduced in diameter to 0.19 in.

5.2.1.2.2 Example 2 – Four Fastener, Single Load Lug, 1 Reduced Diameter Fastener

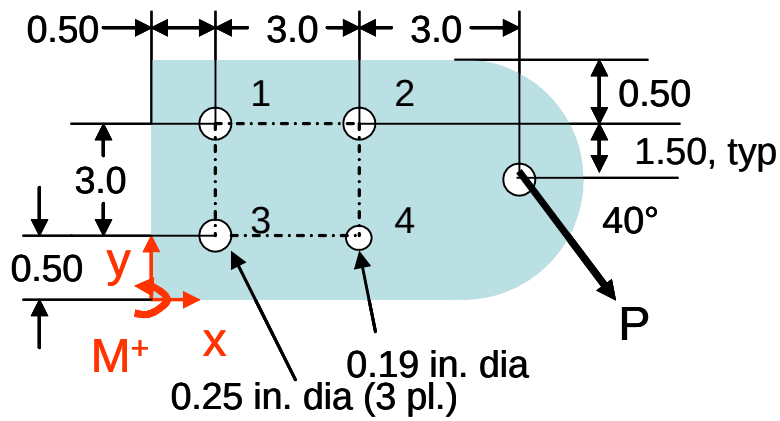

Geometry							
Loading	x_L=6.5; y_L=2.0 in.				P = 1000 lbs P_x = 1000cos(-40°) = 766 lbs P_y = 1000sin(-40°) = -643 lbs		
Fastener Location and Area (All fasteners same material, E drops out)	ID	x_i	y_i	Dia (in)	A_i (in^2)	A_ix_i	A_iy_i
	1	0.50	3.50	0.25	0.049	0.0245	0.1715
	2	3.50	3.50	0.25	0.049	0.1715	0.1715
	3	0.50	0.50	0.25	0.049	0.0245	0.0245
	4	3.50	0.50	0.19	0.028	0.0980	0.0140
Sums					0.175	0.3185	0.3815
Calculate Fastener Centroid	$x_{bar}=\Sigma(A_ix_i)/(\Sigma A_i)$ = 0.3185/0.175 $y_{bar}=\Sigma(A_iy_i)/(\Sigma A_i)$ = 0.3815/0.175				x_{bar}= 1.82 in y_{bar}= 2.18 in		
Calculate M_c	$M_c=P_y(x_L-x_{bar})-P_x(y_L-y_{bar})$ = -643(6.5-1.82)-766(2-2.18)				M_c= -2871 in lbs		

Calculate the direct reactions (All fasteners same material, E drops out)	ID	$E_iA_i/\Sigma(E_iA_i)$	R_{Dxi}	P_{Dyi}
	1	0.049/0.175=0.28	-0.28(766) = -214 lbs	-0.28(-643)=180 lbs
	2	0.049/0.175=0.28	-0.28(766) = -214 lbs	-0.28(-643)=180 lbs
	3	0.049/0.175=0.28	-0.28(766) = -214 lbs	-0.28(-643)=180 lbs
	4	0.028/0.175=0.16	-0.16(766) = -123 lbs	-0.16(-643)=103 lbs

Copyright 2017 Lockheed Martin Corporation.
Note: The current version is always the version on the Lockheed Martin network.

Calculate Δx_i, Δy_i, and $\Sigma(A_i \Delta r_i^2)$	ID	A_i (in^2)	$\Delta x_i = x_i - x_{bar}$	$\Delta y_i = y_i - y_{bar}$	$r_i^2 = \Delta x_i^2 + \Delta y_i^2$	$A_i r_i^2$
	1	0.049	-1.32	1.32	3.485	0.1708
	2	0.049	1.68	1.32	4.565	0.2237
	3	0.049	-1.32	-1.68	4.565	0.2237
	4	0.028	1.68	-1.68	5.645	0.1581
					Sum	0.7763

Calculate the moment reactions and bolt loads	ID	$R_{Mxi} = M_c A_i \Delta y_i / \Sigma(A_i r_i^2)$	$R_{Myi} = -M_c A_i \Delta x_i / \Sigma(A_i r_i^2)$	$R_{Dxi} + R_{Mxi}$	$R_{Dyi} + R_{Myi}$	R_{bolti}
	1	-2871(0.049) (1.32) /0.7763 = -239 lbs	-(-2871)(0.049) (-1.32) /0.7763 = -239 lbs	-214 – 239 = - 453	180 – 239 = -59	457 lbs
	2	-2871(0.049) (1.32) /0.7763 = -239 lbs	-(-2871)(0.049) (1.68) /0.7763 = 304 lbs	-214 - 239 = - 453	180 + 304 = 484	663 lbs
	3	-2871(0.049) (-1.68) /0.7763 = 304 lbs	-(-2871)(0.049) (-1.32) /0.7763 = -239 lbs	-214 +304 = 90	180 – 239 = -59	108 lbs
	4	-2871(0.028) (-1.68) /0.7763 = 174 lbs	-(-2871)(0.028) (1.68) /0.7763 = 174 lbs	-123 + 174 = 51	103 + 174 = 277	282 lbs
Summation in x and y				-765	643	Check

The summation in x and y should be equal and opposite the applied loads. In this case, round-off has resulted in a small error.

The load on fastener 4 was reduced by 30% while the loads on fasteners 2 and 3 went up by about 15 %. The load on fastener 1 was almost unchanged.

Once the bolt loads have been determined, margins of safety for the plates and the fasteners can be determined.

Copyright 2017 Lockheed Martin Corporation.
Note: The current version is always the version on the Lockheed Martin network.

5.2.1.2.3 Example 3 – Six Fastener, Two Loads, Multiple Fastener Diameters

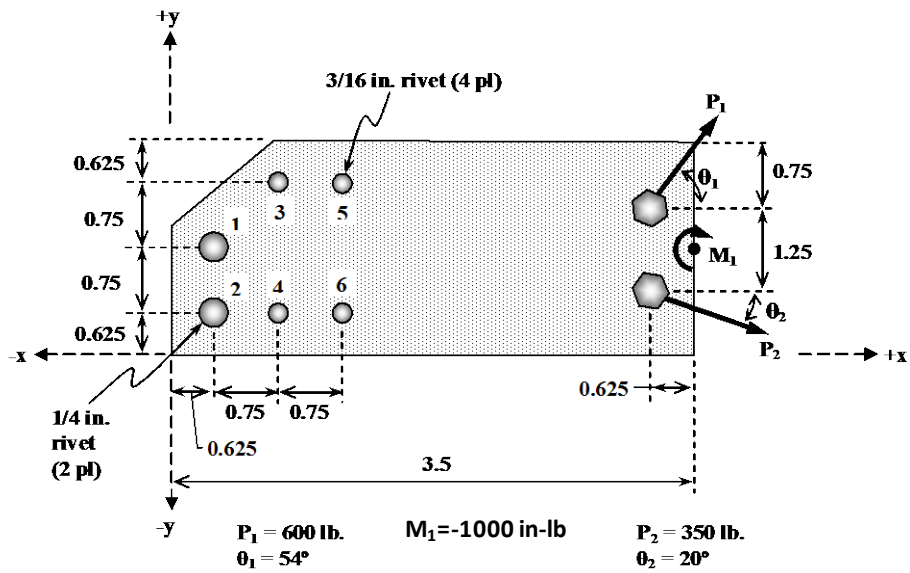

Geometry							
Loading	x_{L1}=2.875; y_{L1}=2.0 in. x_{L2}=2.875; y_{L2}=0.75 in.				P_1 = 600 lbs θ_1=54 ° P_{x1} = 600cos(54) = 353 lbs P_{y1} = 600sin(54) = 485 lbs P_2 = 350 lbs θ_2=-20 ° P_{x2} = 350cos(-20) = 329 lbs P_{y2} = 350sin(-20) = -120 lbs $P_{x\text{-total}}$ = 353 + 329 = 682 lbs $P_{y\text{-total}}$ = 485 – 120 = 365 lbs $M_{applied}$ = -1000 in-lb		
Fastener Location and Area (All fasteners same material, E drops out)	ID	x_i	y_i	Dia (in)	A_i (in^2)	A_ix_i	A_iy_i
	1	0.625	1.375	0.25	0.049	0.0306	0.0674
	2	0.625	0.625	0.25	0.049	0.0306	0.0306
	3	1.375	2.125	0.1875	0.028	0.0385	0.0595
	4	1.375	0.625	0.1875	0.028	0.0385	0.0175
	5	2.125	2.125	0.1875	0.028	0.0595	0.0595
	6	2.125	0.625	0.1875	0.028	0.0595	0.0175
				Sums	0.210	0.2572	0.2520
Calculate Fastener Centroid	$x_{bar}=\Sigma(A_ix_i)/(\Sigma A_i)$ = 0.2572/0.210 $y_{bar}=\Sigma(A_iy_i)/(\Sigma A_i)$ = 0.252/0.210				x_{bar}= 1.23 in y_{bar}= 1.2 in		
Calculate M_c	$M_{c1}=P_{y1}(x_{L1}-x_{bar})-P_{x1}(y_{L1}-y_{bar})$ = 485(2.875-1.23)-353(2-1.2) = 516 $M_{c2}=P_{y2}(x_{L2}-x_{bar})-P_{x2}(y_{L2}-y_{bar})$ = -120(2.875-1.23)-329(0.75-1.2) = -49 $M_{applied}$= -1000 in-lb				M_c= 516 - 49 – 1000 = -533 in lbs		

Calculate the direct reactions (All fasteners same material, E drops out)	ID	$E_iA_i/\Sigma(E_iA_i)$	R_{Dxi}	P_{Dyi}
	1 and 2	0.049/0.210=0.23	-0.233(682) = -159 lb	-0.233(365)= -85 lbs
	3,4,5,6	0.028/0.210=0.13	-0.133(682) = -91 lb	-0.133(365)= -49 lbs

Copyright 2017 Lockheed Martin Corporation.
Note: The current version is always the version on the Lockheed Martin network.

Calculate Δx_i, Δy_i, and $\Sigma(A_i \Delta r_i^2)$	ID	A_i (in^2)	$\Delta x_i = x_i - x_{bar}$	$\Delta y_i = y_i - y_{bar}$	$r_i^2 = \Delta x_i^2 + \Delta y_i^2$	$A_i r_i^2$
	1	0.049	-0.605	0.175	0.3967	0.0194
	2	0.049	-0.605	-0.575	0.6967	0.0341
	3	0.028	0.145	0.925	0.8767	0.0245
	4	0.028	0.145	-0.575	0.3517	0.0098
	5	0.028	0.895	0.925	1.6567	0.0464
	6	0.028	0.895	-0.575	1.1317	0.0317
					Sum	0.1659

Calculate the moment reactions and bolt loads	ID	$R_{Mxi} = M_c A_i \Delta y_i / \Sigma(A_i r_i^2)$	$R_{Myi} = -M_c A_i \Delta x_i / \Sigma(A_i r_i^2)$	$R_{Dxi} + R_{Mxi}$	$R_{Dyi} + R_{Myi}$	R_{bolti}
	1	-533(0.049) (0.175) /0.1659 = -28 lbs	-533(0.049) (-0.605) /0.1659 = -95 lbs	-159 -28 = - 187	-85 + -95 = -180	259 lbs
	2	-533(0.049)(-0.575) /0.1659= 90 lbs	-533(0.049) (-0.605) /0.1659 = -95 lbs	-159 + 90 = -69	-85 -95 = -180	193 lbs
	3	-533(0.028)(0.925) /0.1659 = -83 lbs	-533(0.028)(0.145) /0.1659 = 13 lbs	-91 - 83 = -174	-49 + 13 = -36	177 lbs
	4	-533(0.028)(-0.575) /0.1659 = 52 lbs	-533(0.028)(0.145) /0.1659 = 13 lbs	-91 +52 = -39	-49 +13 = -36	53 lbs
	5	-533(0.028)(0.925) /0.1659 = -83 lbs	-533(0.028)(0.895) /0.1659 = 81 lbs	-91 - 83 = - 173	-49 +81 = 32	176 lbs
	6	-533(0.028)(-0.575) /0.1659 = 52 lbs	-533(0.028)(0.895) /0.1659 = 81 lbs	-91 + 52 = -39	-49 +81 = 32	50 lbs
Sumamtion in x and y				-680	-368	check

The summation in x and y should be equal and opposite the applied loads. In this case, round-off has resulted in a small error.

Once the bolt loads have been determined, margins of safety for the plates and the fasteners can be determined.

5.2.2 Fastener Pattern Analysis – Elastic Distribution Analysis

The second type of analysis is the elastic distribution of fastener loads through multiple layers of a shear splice. This takes fastener and plate stiffness into account in determining the distribution. The method requires the development of *n-1* recurrence equations where *n* is the number of fasteners in the joint and one equilibrium equation, generally a summation of forces, which are then solved simultaneously. The recurrence equations sum up the load contributions from various sources at each fastener assuming strain compatibility between the different layers of the stack-up. A simultaneous solution of these equations results in the load at each fastener. This method, while limited in the complexity of the joint for which it can be used, is powerful due to its ability to be used for mechanical as well as thermal distributions through the joint.

The structural analysis program IDAT (Integrated Design and Analysis Toolset) has a routine called SPRING which can calculate the distribution of loads in a shear joint; SPLICE, a two dimensional bolted joint analysis method; and SS_JOINT which treats a single fastener in the joint as a beam on an elastic foundation. Some installations of IDAT also have a routine called SS_JOINT which calculates fastener stiffness based on NACA TN 1051 for use in some of the bolted joint analysis programs. Also useful is a finite element based approach in conjunction with SMN389 (Reference 5-8), FAS92 (Reference 5-9) or other fastener stiffness methods.

Copyright 2017 Lockheed Martin Corporation.
Note: The current version is always the version on the Lockheed Martin network.

5.2.3 Basic Joint Analysis

Once the loads in individual fasteners of a joint have been determined through one of the methods outlined in Sections 5.2.1 or 5.2.2 or through the use of finite element analysis or by some other means, analysis of the various parts of the joint can be performed. This section will outline the basic steps in the analysis of joints.

For a joint having many fasteners, such as skin splice, a fitting factor is not generally used. For a splice of a longeron or stringer, where there is a fitting and a limited number of fasteners, a fitting factor of 1.15 at ultimate is recommended. In addition, some programs require the use of a 1.15 fitting factor at limit load. The use of all fitting factors is governed by program or customer specific guidelines. Section 5.3 discusses fitting in more detail.

The most desirable and robust joint is one in which all fasteners are bearing critical because this type of joint has significant redistribution capability minimizing the probability of an unexpected catastrophic failure. The distribution of joint loads, as discussed in the two preceding sections or through the use of a finite element model is termed 'elastic distribution' and is a reasonable representation of the fastener loads before any yielding of material occurs. They are very useful for fatigue and damage tolerance calculations and are generally used in analysis even at ultimate load where some yielding has most likely occurred.

If the joint is bearing critical then an alternate fastener distribution may prove useful for ultimate analysis. This is termed an 'ultimate distribution' and is based on the concept that the first, most highly loaded fastener location will have some yielding of the plate material in bearing and will redistribute load to the adjacent fastener location. This load and redistribution cycle will continue, assuming there are sufficient bearing critical fasteners in the local vicinity, until the loads on the most highly loaded fasteners have equalized. This bearing redistribution occurs at a load level below the fastener shear or net section strengths and at this point the ultimate capability of the joint has been realized. It is crucial that none of the the fasteners in this type of joint are shear critical or the cross-section is not net section critical because the fastener would fail (fastener shear critical) or the splice rupture (net section critical) before the redistribution occurs and, potentially, the joint would fail catastrophically.

For this reason is it recommended that all joints be designed as bearing critical.

In addition, if an ultimate distribution analysis is utilized, a yield analysis must also be performed using the elastic distribution and limit load or limit load multiplied by some factor, generally 1.15 to 1.25. This factor is governed by program or customer specific guidelines.

If a joint is fastener shear critical, rather than bearing critical, some programs recommend maintaining a minimum margin of 0.15 on the fastener only. All other joint margins, *i.e.*, bearing, net section, etc., would not be subject to this minimum margin requirement. A fastener shear critical joint as defined as a joint in which the lowest margin is fastener shear. This margin is not necessary if a fitting factor is applied.

5.2.3.1 General Discussion

5.2.3.1.1 Edge Distance

To develop the full joint strength, edge and end distances of twice the fastener hole diameter (2D) are required after locational tolerances are taken into account. This also, in many cases, eliminates or minimizes joint fatigue or damage tolerance problems. As the end distance is reduced from 2D, the bearing strength and shear tearout capability are reduced. As the edge distance is reduced, the joint fatigue life and net section capability of the joint is reduced. In addition the joint becomes more flexible. Figure 5.2.3-1 depicts the basic joint terminology. Figure 5.2.3-11 depicts the shear-tearout failure mode.

Additional discussion on edge distance can be found in Section 5.2.3.2.

Copyright 2017 Lockheed Martin Corporation.
Note: The current version is always the version on the Lockheed Martin network.

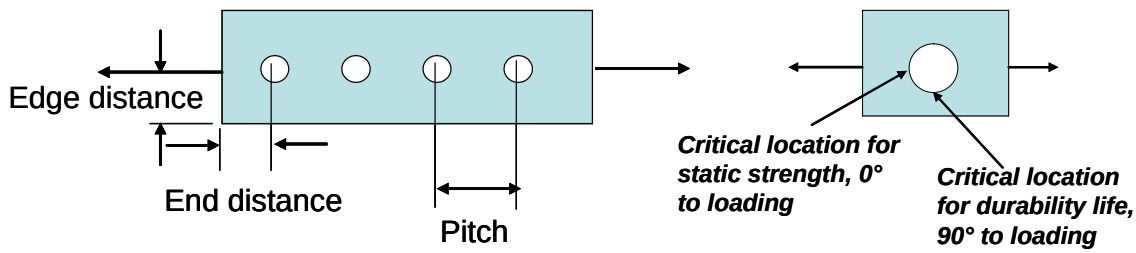

Figure 5.2.3-1 Basic Joint Terminology

The analyst should pay particular attention to locational tolerances and assembly sequences to ensure that the joint strength is not compromised due to short edge / end distances. If, in the process of design, compromises must be made, use the part's structural classification and function to determine which part would be impacted least by short edge distance. For instance, if a bracket were being mounted to a bulkhead stiffener, the edge distance might be compromised on the bracket to ensure there was adequate edge/end distance on the bulkhead stiffener.

In material review or part salvage activities, it is occasionally unavoidable that the edge/end distance is reduced below 2D. Adjustment of the bearing strength and durability life must be accounted for. In addition shear tear-out must be checked. It is strongly recommended that the edge/end distance never be reduced below 1.5D by design.

The analyst should be aware that in many circles, both edge and end distances are referred to universally as edge distance.

5.2.3.1.2 Fastener fit

Fastener fit is how closely the diameter of the fastener matches the diameter of the installation hole. An interference fit joint is when the hole ranges from being exactly the same size as the fastener to somewhat smaller than the fastener when all tolerances are taken into account. This arrangement minimizes the amount of slip potential in the joint and allows the fasteners to transfer load from the onset of loading. This type of hole is desirable in all metal joints but can damage the composite in a composite-metallic joint. The fastener generally has to be forced into this type of hole and thus also provides an additional life benefit. By forcing the fastener into the hole, a compressive stress field is set up at the edge of the hole. This compression stress field suppresses the formation and growth of tiny cracks at the edge of the hole. No benefit is generally taken in the analysis, however it makes the joint more robust.

A transition fit joint is one where the fastener has a slight interference with the hole at one end of the tolerance band to a slight clearance at the other end of the tolerance band. While the potential for movement in this type of joint is greater than for interference fit fasteners, it is still an improvement over clearance fit fasteners. Some manufacturers use this type of joint with both metal-metal and metal-composite joints.

A clearance fit joint is where the hole ranges from being exactly the same diameter as the fastener to being somewhat larger than the fastener when all tolerances are taken into account. There are various classes of clearance fit depending on the hole size and tolerance. Primary structure, if not using transition or interference fit design, will have only a small degree of clearance, generally on the order of 0.000 to 0.004 inch. This arrangement allows some degree of slippage in the joints and is, thus the least desirable of the structural categories of fastener fit because the fasteners load up less uniformly than with transition or interference fit and, as the aircraft loading reverses, there is some working of the joint.

To satisfy replaceability requirements of equipment or doors, a clearance of 0.015-0.032 inch may be required and for interchangeability, it may be as large as 0.060 inch. The latter two categories will allow a certain amount of slippage to occur prior to the fasteners carrying load and can result in uneven loading of the fasteners. On access panels or doors with these types of clearances, it is sometimes the case that some percent of the fasteners is

Copyright 2017 Lockheed Martin Corporation.
Note: The current version is always the version on the Lockheed Martin network.

considered ineffective for analysis purposes. In addition clearances of this magnitude can lead to fretting or working of the faying surface which could become crack initiation sites.

Clearance fit fasteners can cause the load to peak since the fasteners can tilt substantially more than in transition or interference fit holes. This peaking usually results in a reduction of joint allowable, since it can cause fastener bending and the heads of countersunk and shear head protruding fasteners to pop off due to prying forces.

The type of fit used for particular applications is generally governed by specific aircraft programs based on considerations of assembly techniques, fastening systems, expected aircraft life and component level test results. In addition, it may vary from location to location on a given aircraft.

Testing of fasteners in holes of various fit has been performed at Lockheed. From this a static strength loose hole reduction factor, k_{loose}, curve has been derived and is shown in Figure 5.2.3-2.

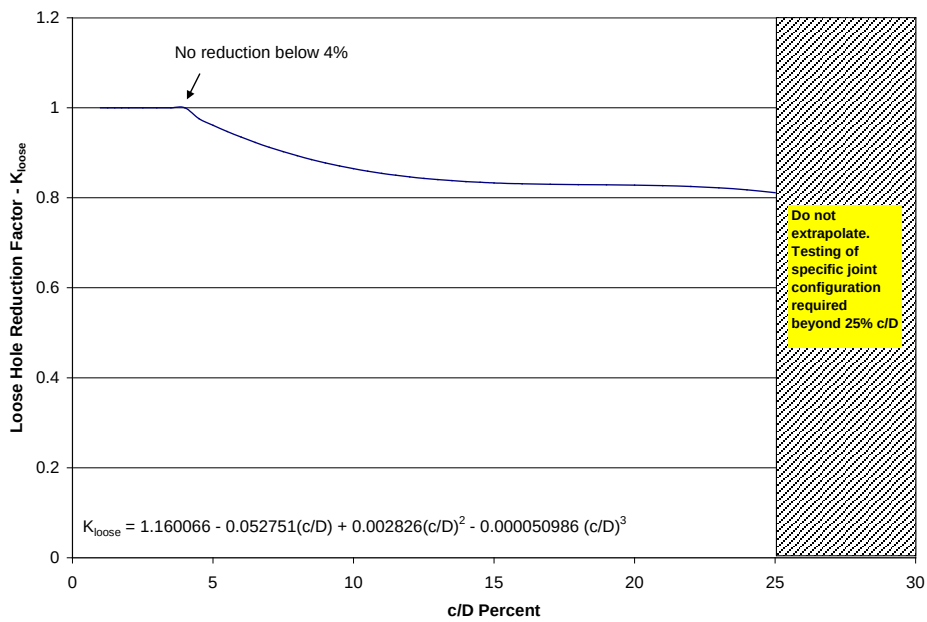

c/D Percent = [diametric clearance (inch) / Diameter of Hole (inch)] (100)

Figure 5.2.3-2 Static Loose Hole Reduction Factor

This reduction factor is used in the fastener strength calculations and is used to reduce the shear strength allowable of the fastener or the joint failure strength from Reference 5-4. It is not used in any failure mode involving the plate materials of the joint, i.e bearing, net tension, etc.

5.2.3.1.3 Installation Torque and the Effect of Preload

Threaded fasteners are installed with a torque specified either on the drawing or in the fastener specification. The torque is selected to provide an initial tension loading in the bolt or pin to ensure that the faying surfaces remain in contact. The specified torque should not result in yielding of the fastener at the minor diameter of the threads. The amount of preload resulting from fastener torque varies with

- Fastener lubrication
- The calibration accuracy of the torque wrench
- Variations in the self lock torque
- The fit of the fastener
- The amount of mismatch between holes

Copyright 2017 Lockheed Martin Corporation.
Note: The current version is always the version on the Lockheed Martin network.

- Whether or not the surfaces being clamped are gapped.

All of the above items, except lubrication, take torque energy to overcome the resulting friction reducing the amount of torque available to develop the preload. Researchers have made an effort to quantify the first three items. The remaining items are dependent on the manufacturing process and have not been quantified. Section 5.5 presents an analysis approach for calculating torque and resulting fastener preload taking into account these variables. Table 5.2.3-1 describes in detail some of these factors and their implication on the integrity of the joint. How these factors are actually used is detailed in Section 5.5.1.

Table 5.2.3-1 Factors Affecting Application of Preload to Bolts

Factors Affecting Preload	Torque Variablility Lubricated Installations	Torque Variablility Non-lubricated installations
Thread friction	+/- 20%	+/- 30%
Torque wrench accuracy	+/-15%	+/-15%
Nut Breakaway[3] Torque	+/- 80%	+/- 80%

The torsional stress due to the application of torque, in general, relaxes after the torque wrench is removed due to embedment relaxation[4] resulting in little remaining torsional stress**.** If the fasteners gall[5] on installation, the fasteners may not seat properly and the torsional stress will not be relieved. This can result in premature failure of the fastener. Galling can also prevent the proper preload from being achieved, thus the use of lubrication is very important. Table 5.2.3-2 provides some typical target preloads as a percentage of yield strength of the bolts. These are only guidelines and specific applications may have other considerations such as type of bolt, head style, nut and bolt fatigue. Reference 5-12 and independent calculations estimate the torsional shear stress remaining after the torque wrench has been removed, will reduce the bolt's capacity to support tensile stress by no more than 10%. As a result, the torsional stress is not generally accounted for when calculating the bolt margins but it is accounted for in the limiting of maximum bolt preload stress to no more than 90% of F_{ty}.

[3] Torque applied in opposite direction to tightening torque to break away or restart nut rotation.
[4] Embedment relaxation is the relaxation of the fastener as the head or nut gradually embeds itself into the surface of the joint due to the surface compression resulting from torquing the fastener.
[5] Galling is a cold welding process in which the threads of fastener and nut come into intimate contact and an atomic bond forms between them. It is most common in stainless steel bolts without lubrication. Minor galling damages the threads. Major galling prevents the nut from turning.

Copyright 2017 Lockheed Martin Corporation.
Note: The current version is always the version on the Lockheed Martin network.

Table 5.2.3-2 Typical Preloads as a Percentage of Fastener Yield Strength

Percentage of F_{ty}	Joint type	Application	Comments
40	Gasketed	Joints with minimal risk of leakage (close fit fasteners, closely spaced fasteners, shear joint)	Torque levels for gasketed installations must always be specified on the drawing. Care must be taken to specify a level which does not over compress the gasket.
60	Gasketed	Maximum recommended preload for gasketed joints. Torque control should be used at assembly	
25	Non-gasketed, shear	Minimum recommended level for aerospace joints. Close fit fasteners to prevent slippage, low to moderate shear loading. No direct tension loads or minimal induced tension loads.	Level typically called out in fastener installation specifications for shear bolts.
60	Non-gasketed	Minimum recommended level for aerospace tension joints and highly loaded shear joints.	
75-80	Non-gasketed	Optimal level for aerospace tension joints. Close fit fasteners, moderate to high tension loading.	Level typically called out in fastener installation specifications for tension bolts.
90	Non-gasketed	Maximum recommended level for aerospace tension joints.	Must be called out on drawing
91-100	Non-gasketed	Can be used in special circumstances.	Shear stresses due to applied torque **must be accounted for** in the bolt analysis (see discussion below).

In most joints, an initial tightening pass is made in which all fasteners are torqued, in some sequence, to the specified value. As each of the fasteners, in turn, is tightened, some lose their tensioning due to seating of the joint, stretching of the fastener, compression of the finishes, and elastic interactions. A second pass will be made to tighten all fasteners to the specified values. At this point the fastener has a residual preload, $P_{residual}$. This is sometimes also called initial preload. Over the life of the joint, some of this preload can relax through stress relaxation or creep. Reference 5-11 estimates this loss between 6-8% with high strength bolts torqued to specification limits over the life of the joint with the majority of the loss occurring with the first 24 hours. The amount of relaxation varies with the length of the bolt and the number of layers being joined and whether or not sealant is present.

In joints loaded primarily in **shear**, preload serves to keep the surfaces together and prevent motion. With no preload, this motion can lead to fretting and corrosion of the faying surface which can shorten the life of the parts as well as loosening of the fastener due to loss of friction between the head or nut and the surface of the joint. This can cause loss of the fastener and premature failure or fluid leakage. In shear joints, the preload can be and usually is lower than for tension joints as is shown in Table 5.2.3-2 because none of the preload is directly counteracting tension loads trying to pull the joint surfaces apart.

In joints loaded in **tension**, preload is an important factor to preclude fatigue damage and overstressing of the bolts through the clamping action on the joint. With the correct preload, the mating surfaces remain in contact and the bolt experiences little change in tension load while operating within the flight envelope. In this case, the preload acts as a mean load and the applied loads are smaller excursions from this mean. The portion of the applied load experienced by the bolt is small because it adds to the bolt tension load as a function of the ratio of the stiffness of the bolt to the stiffness of the joint. In a preloaded joint, once the compression preload of the surfaces is overcome by tension applied by aircraft loading, the surfaces separate and the bolt load becomes the total applied load.

If the bolt is not installed with sufficient torque to keep the mating surfaces in contact throughout the full range of loading, the joint end pad and fastener are cycled with every change in load in the flight spectrum which dramatically impacts life because the size of the excursion is the total bolt load. It is recommended that minimum opening preload should be greater than 115-125% of maximum design limit load. How to calculate the minimum

Copyright 2017 Lockheed Martin Corporation.
Note: The current version is always the version on the Lockheed Martin network.

required preload to preclude opening of the joint is discussed in Section 5.5. Some customers and programs require that joints not experience opening at ultimate load.

If the joint is improperly shimmed such that the mating surfaces are held apart, then the preload can severely limit the ultimate capability of the joint since the preload is a direct tension load on the fastener which adds directly to the applied tension load limiting the amount of applied load the bolt can carry.

Figure 5.2.3-3 illustrates the effects of preload on static loading in tension joints, while Figure 5.2.3-4 illustrates the beneficial effect of bolt preload on bolt cyclic loading. At a given applied load, the total static bolt load is higher for a properly preloaded joint, Figure 5.2.3-3B, than for a joint without preload, Figure 5.2.3-3 A, until joint separation. However, the presence of preload dramatically reduces the cyclic excursions in bolt load if the maximum applied load is below the joint opening load as shown in Figure 5.2.3-4 B. Improvements to life are one of the primary reasons for preloading the bolts. Figure 5.2.3-3 C illustrates the loading on the bolt when the applied load exceeds the joint opening load. In this case the total bolt load is again equal to the applied load. Other reasons for preloading joints are to ensure they remain in contact, the nuts don't back-off and to prevent fretting due to joint motion.

Section 5.5 describes in detail a methodology for calculating preload due to bolt torque and joint opening load for use in analysis. For common applications, this method can be reduced to the approach described below through the use of a nut factor. The nut factor for Mil-S-8879 threads with specific types of lubrication, joint surfaces and fasteners sizes have been summarized in Table 5.2.3-3. This table provides a nut factor from which the nominal preload can be easily calculated if the nominal residual torque is known. The nominal residual torque is the difference between the applied torque and the torque required to overcome the locking feature. The nominal preload can then be calculated from

$$P_{bi\text{-}nominal} = T_r / K_{nut} \qquad \textbf{Equation 5.2.3-1}$$

where
T_r is the the nominal residual torque given by Equation 5.5.1-1 (in-lbs)
K_{nut} is the nut factor from Table 5.2.3-3 for Mil-S-8879 threads

Copyright 2017 Lockheed Martin Corporation.
Note: The current version is always the version on the Lockheed Martin network.

A) Tension Joint With No Preload

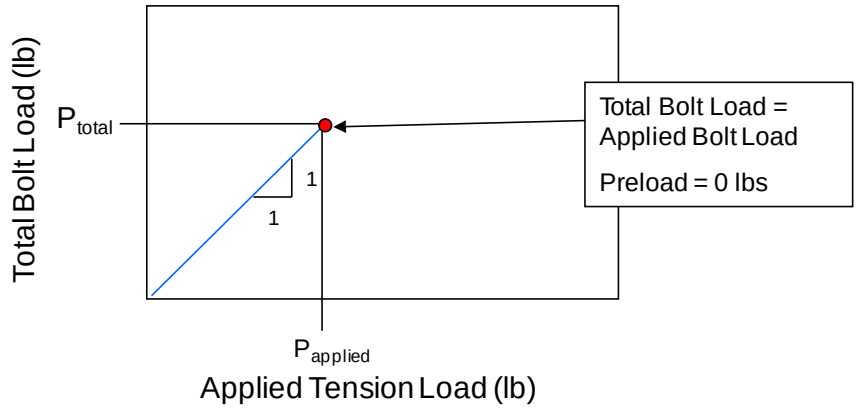

B) Tension Joint With Proper Preload: Mating Surfaces Remain in Contact Under Applied Load

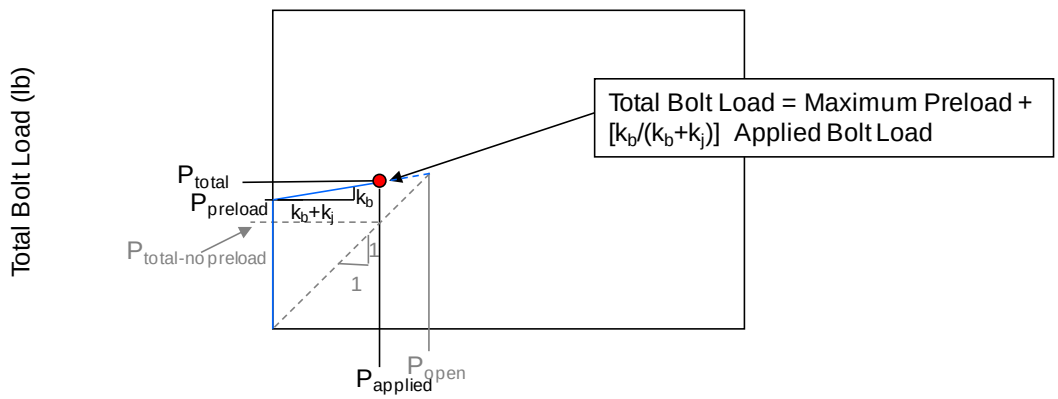

C) Tension Joint With Insufficient Preload: Mating Surfaces Lose Contact

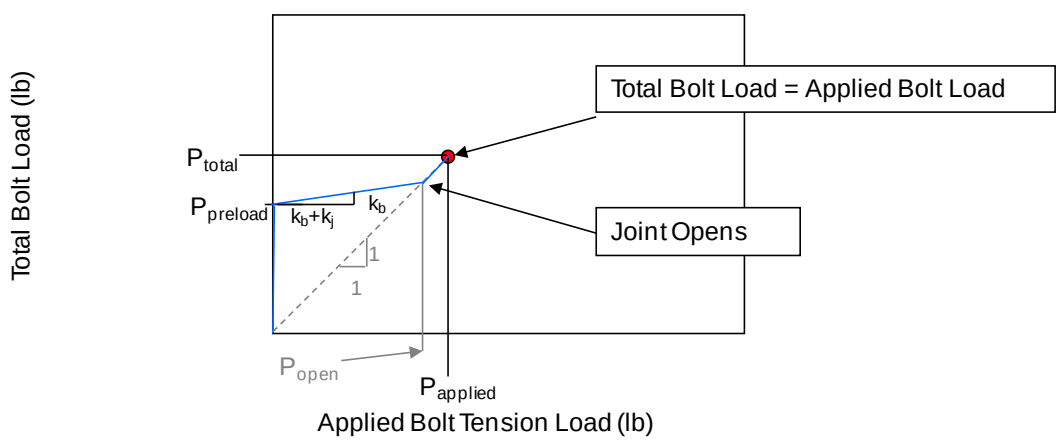

Figure 5.2.3-3 Effect of Preload on Tension Joint Capability

Copyright 2017 Lockheed Martin Corporation.
Note: The current version is always the version on the Lockheed Martin network.

A) Tension Joint With No Preload

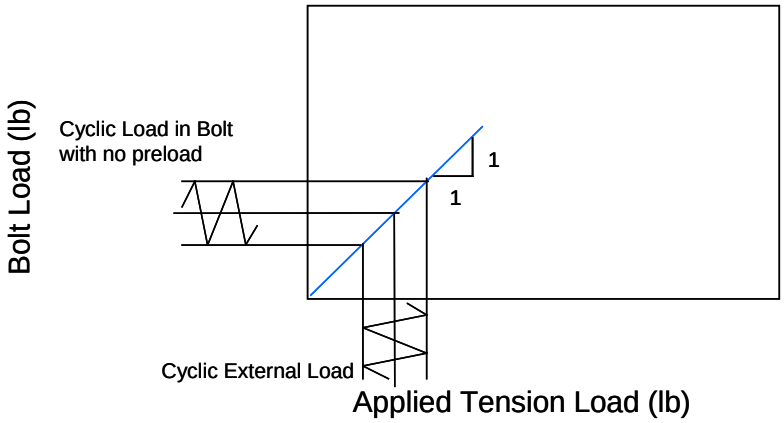

B) Tension Joint With Proper Preload: Mating Surfaces Remain in Contact Under Applied Load

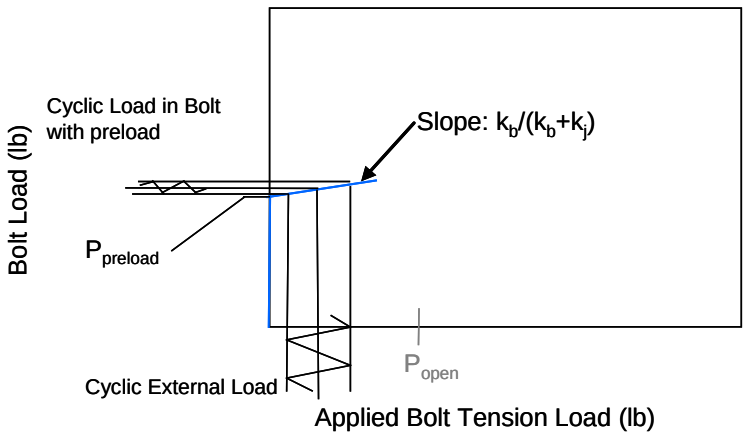

Figure 5.2.3-4 Effect of Preload on Bolt Cyclic Loads

Copyright 2017 Lockheed Martin Corporation.
Note: The current version is always the version on the Lockheed Martin network.

Table 5.2.3-3 Wrench Nut Factors for Calculating Preload – Mil-S-8879 Threads

	Steel [6] and Titanium Bolts[3]			
Fastener Size	K_{nut} – Nut Turning on Steel, Aluminum, or Titanium Fitting[4]		K_{nut} – Nut Turning on Steel Fitting[4]	K_{nut} – Nut Turning on Aluminum Fitting[4]
Diameter – Threads per Inch	Lubricant[1,5]	Dry Film[2,5]	Dry	Dry
	$\mu = 0.05138$	$\mu = 0.07172$	$\mu = 0.1974$	$\mu_{nut\text{-}fastener} = 0.1974$ $\mu_{nut\text{-}plate} = 0.1298$
08-32	0.015698	0.019944	0.046177	0.037632
10 – 32	0.017661	0.022684	0.053720	0.043607
¼ - 28	0.022521	0.029186	0.070370	0.057023
5/16 – 24	0.027756	0.036119	0.087792	0.071086
3/8 – 24	0.032176	0.042289	0.104773	0.084688
7/16 – 20	0.037746	0.049538	0.122403	0.098959
½ - 20	0.042166	0.055708	0.139384	0.112561
9/16 – 18	0.047351	0.062596	0.156792	0.126605
5/8 – 18	0.051774	0.068770	0.173785	0.140218
¾ - 16	0.061569	0.082005	0.208278	0.167972
7/8 – 14	0.071645	0.095507	0.242950	0.195905
1 – 14	0.080232	0.107493	0.275941	0.222169
1.125 – 12	0.090973	0.121736	0.311821	0.251290
1.25 – 12	0.099816	0.134080	0.345796	0.278504
1.375-12	0.108148	0.145711	0.377808	0.304432

1. On steel surfaces use MIL-T-5544; on Aluminum use MIL-G-21164 or equivalent.
2. Mil –L-22398 Lubricant or equivalent or silver plating on nut
3. Factors for bolt and nut combination are based on holding the bolt fixed and turning the nut.
4. Where washers are used under the nut, the surface material shall be taken as the material of the washer.
5. Lubricant is applied to threads and to bearing surfaces of the head and nut.
6. Except Inconel 718 Bolts with silver plated nuts, either MIL-T-5544 or LCM34-1213 lubricant should use Dry Film Lubricant factors.

The maximum tension preload in the fastener can then be calculated using Equation 5.5.1-7, repeated here, for convenience. For more in-depth discussion refer to Section 5.5.1. This calculation is valid for both static and fatigue load levels.

$$P_{bi\text{-}maximum} = (1+u)P_{bi\text{-}nominal} + P^{pos}_{thermal} \qquad \textbf{Equation 5.2.3-2}$$

where

u is the variability factor given by Equation 5.5.1-4: u=0.26 for lubricated threads and u=0.37 for non-lubricated threads

$P_{bi\text{-}nominal}$ is the nominal preload from Equation 5.2.3-1

$P^{pos}_{thermal}$ is the positive change in preload due to thermal cycling (lbs) given by Equation 5.5.1-5

5.2.3.1.4 Friction in Shear Joints

There are two types of shear joints: friction-shear and bearing-shear. The former transfers load entirely through friction and is not generally used for aircraft design except in very special applications detailed in Section 5.9. The latter is the type of joint discussed in this section where the load is transferred through the fastener shear and plate bearing. *In bearing-shear joints the benefits of friction are ignored.* This is due to the fact that the coefficient of friction is very difficult to control and virtually impossible to predict. It is affected by hardness of the parts, surface finish, surface coatings, material type and the possibility of lubricants, such as oil or fuel, penetrating the joint. In addition, bolt-to-hole clearance affects the behavior of friction type joints. Friction joints are generally tested to empirically determine the friction load capacity. Industries where friction joints are used also,

Copyright 2017 Lockheed Martin Corporation.
Note: The current version is always the version on the Lockheed Martin network.

generally, have very specific design and failure criteria such as minimum bolt-to-hole clearances of 1/16 in., a minimum torque, absence of washers, and the type of thread used. In addition the amount of load transfer is affected directly by the amount of clamping force due to bolt torque. In industries that use this type of joint, the joint torque value is set at the yield strength of the bolt material and a 'failure' criterion defined as the onset of slippage. In addition, this type of joint is generally used where there are not cyclical, reversing applied loads.

In summary, for aerospace applications beneficial effects of friction are ignored in joint design.

5.2.3.1.5 Tension/Shear, Tension or Shear Joints

A mixed joint can be one that transfers load through both a tension fitting and a shear splice. It can also be different types, diameters and fits of fasteners in a single joint. This section will examine the benefits and pitfalls associated with each of these items.

Tension joints are the most flexible type of joint. Load is transferred through stretching the bolt as well as bending and prying of the surfaces. Shear joints are much stiffer because the load is transferred in the plane of the joint material. If, within a single joint, part of the load is transferred via a tension fitting and part of the load is transferred via a shear fitting, the tension portion of the joint will flex and the shear portion will carry more of the load, making it difficult to analyze. This type of mixed joint is not recommended, however it is sometimes unavoidable. If utilized, analysis must take into account the relative flexibilities in order to preclude unexpected static and fatigue failures.

Different types of fasteners used in a single joint can also be problematic. The best case is where the only difference is in the material or the diameter. From an analytical standpoint the loading for different diameter or stiffness fasteners can be determined. From a practical standpoint if only a few critical fasteners in a joint with a limited number of fasteners need to be tension head or high-strength steel, consideration should be given to making all the fasteners in the joint the same. This adds a small amount of weight, locally, but minimizes the opportunity for the fasteners to be inadvertently mixed up on installation.

Joints should not be designed where fasteners are of different fit. For example, mixing interference fit fasteners and clearance fit fasteners ensures the interference fit fasteners overload before there is sufficient joint slippage for the clearance fit fasteners to acquire load. Structural rivets should not be used with other types of fastening systems.

Caution must also be used in the attachment of nut plates. These devices are usually held on using two very small rivets. The load transfer is intended to be between the fastener and the side of the hole. In general nut-plated joints are designed with some type of clearance fit. If the nut plate is attached to the structure with rivets going through multiple layers of the stack-up, the rivets can load up and shear off because they are in an interference hole and the primary fastener is in a clearance hole. Nut plate rivets should be attached to a single layer of material.

Also there are two types of nut plates: fixed and floating. Fixed nut plates require the bolt hole through the joint to line up with the hole in the nut plate. These are generally used with tight tolerance holes so that the bolt is in contact with the hole wall or in tension joints which require no wall contact to eliminate the possibility of shear loading. Floating nut plates can be used with clearance holes. The float allows the nut element to move around so that the fastener can contact the side of the hole and transfer load through bearing.

5.2.3.1.6 Threads in Bearing

Using fully threaded fasteners is not generally permitted in aerospace applications for several reasons. The shear capability of the fastener is reduced if the fastener shear load is taken through the threads due to reduced area and the stress intensification at the root. Additionally the threads bearing against the side of the hole can create crack initiation sites which could result in a shortened fatigue life for the joint. Fasteners should be chosen such that only the shank (unthreaded) portion is used in load transfer. In some cases, such as wire bundle clamps, it is impossible to

Copyright 2017 Lockheed Martin Corporation.
Note: The current version is always the version on the Lockheed Martin network.

avoid using fully threaded fasteners. These should only be installed in secondary structure, i.e. clamp brackets, where fatigue is not a consideration and fastener margins of safety are high.

5.2.3.1.7 Knife-Edge Countersunk Fasteners

Countersunk fasteners installed in thin sheet material can result in a condition known as knife-edge. This is illustrated in Figure 5.2.3-5. The first picture shows a properly installed countersink fastener. Its head extends through no more than 70% of the sheet in which it is installed. If the head extends beyond that point or into the second plate, as in pictures two and three, it significantly reduces the joint strength and fatigue life. In some cases the fastener shear strength is reduced due to this effect. In addition, it can create the situation where the fastener can become scratched or notched by the sharp edge on the sheet, depending on the relative hardness and strengths of the sheet and fastener materials.

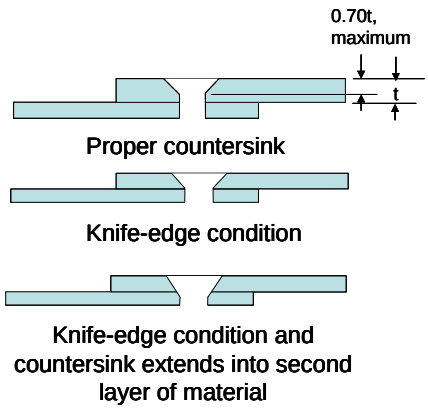

Figure 5.2.3-5 Countersink Fastener Joints

5.2.3.1.8 Fastener Spacing

In joints containing multiple fasteners, the minimum recommended fastener spacing, *s*, is 4 times the hole diameter, *D*. This applies to spacing both in-line-with and perpendicular-to the load. This maximizes the bearing strength of the joint layers, minimizes the potential of net-section-tension failures and reduces the interaction of the stress concentrations between the fastener holes. This minimum spacing during design allows some flexibility for material review and salvage repairs.

The maximum recommended spacing for compression or shear-loaded structure is the minimum of [7 times the hole diameter or 22 times the thickness, *t*], for non-buckled structure and the minimum of [5 times the hole diameter or 18 times the thickness] for buckled structure. This spacing ensures that the joint layers are working in unison and are able to transfer the load. These requirements are based on testing found in References 5-32 and 5-33 where it was noticed that the stiffened panels failed earlier than predicted due to fastener tension failure, fastener head failure and/or the fastener pulling through the sheet. It is insufficient to base the spacing only on inter-rivet buckling of the layers.

Table 5.2.3-4 summarizes the recommended limitations on fastener spacing for design.

Table 5.2.3-4 Recommended Limitations on Fastener Spacing

Minimum Recommended	Spacing	Maximum Recommended	Comment
4D≤	s	Minimum of [≤7D, 22t]	Non-buckled Structure
4D≤	s	Minimum of [≤5D, 18t]	Buckled Structure

Copyright 2017 Lockheed Martin Corporation.
Note: The current version is always the version on the Lockheed Martin network.

Figure 5.2.3-6 is a bar chart showing the predicted inter-rivet buckling failure and the actual specimen failure for the aluminum panels reported in Reference 5-32 and 5-33 for s/t ranging from 6 to 30 and s/D from 5 to 28 to illustrate that it is not sufficient to determine the fastener spacing based solely on inter-rivet buckling calculations.

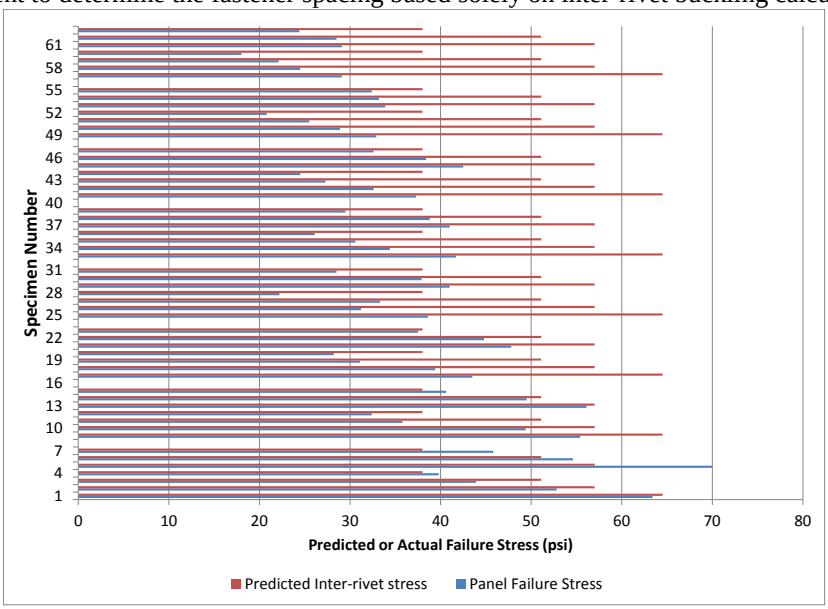

Figure 5.2.3-6 Comparison of Actual Failure to Predicted Inter-rivet Failure

Figure 5.2.3-7, from Reference 6-1, provides a reduction factor for large spacing for use in salvage and material review activities. This factor should be used to reduce the allowable joint strength and the allowable bearing strength. Note that the reduction factor should be based on either the spacing to single layer joint thickness ratio or the spacing to fastener diameter ratio, whichever results in the lower reduction factor.

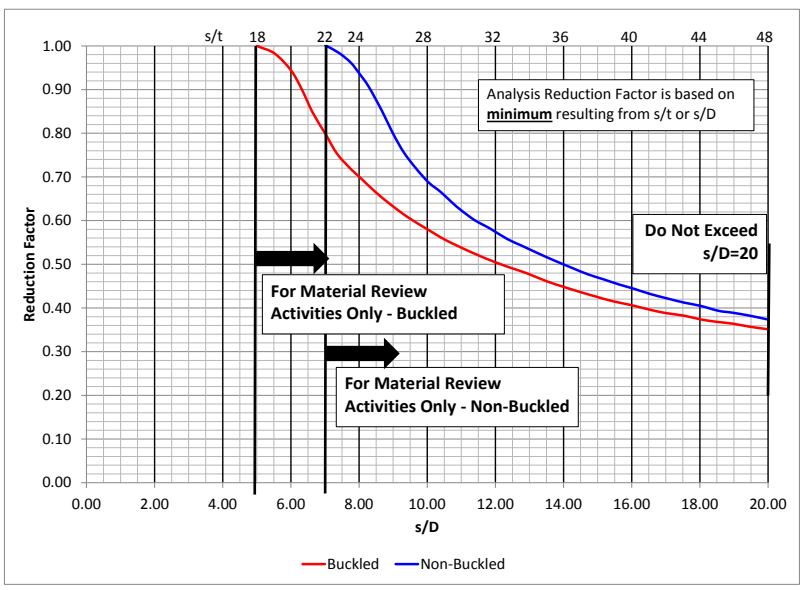

Figure 5.2.3-7 Reduction Factor Due to Large Fastener Spacing

Copyright 2017 Lockheed Martin Corporation.
Note: The current version is always the version on the Lockheed Martin network.

5.2.3.2 Joint Bearing, Shear Tear-out and Net Section Analysis

All of the various layers in the joint must be analyzed for bearing, shear tear-out and net section tension capability. Each of these will be discussed in this section. To help clarify the discussion, Figure 5.2.3-8 depicts typical joint terminology.

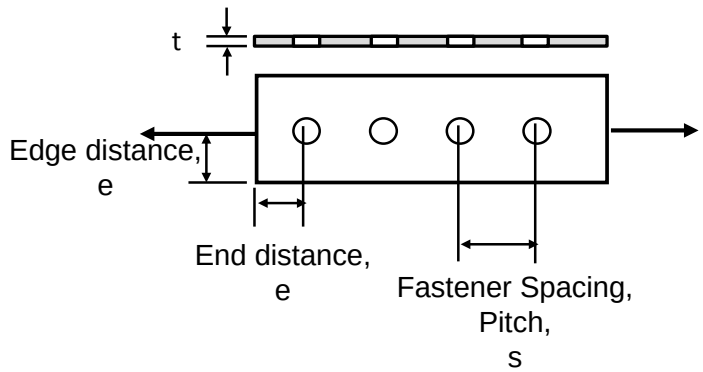

Figure 5.2.3-8 Typical Joint Terminology

In Figure 5.2.3-8, two distances are shown: the end distance and the edge distance. It is industry practice to refer to both as edge distance, e, but the distinction is made here for discussion purposes because each one is critical in different joint failure modes. End distance is critical for bearing, net section shear, and shear tear-out. Edge distance is critical for net section tension and for durability calculations.

For protruding head solid rivets and protruding tension head solid fasteners (threaded or swaged collar) the allowable fastener load due to bearing is given by

$$P_{br\text{-}ult} = F_{bru\text{-}allow}\, D_{bolt}\, t \qquad \textbf{Equation 5.2.3-3}$$

$$P_{br\text{-}yield} = F_{bry\text{-}allow}\, D_{bolt}\, t \qquad \textbf{Equation 5.2.3-4}$$

Bearing properties valid for $0.18 \le t/D_{bolt} \le 1.0$

where
$F_{bru\text{-}allow}$ is the temperature adjusted ultimate bearing allowable per PM4057, Sections 3.3.3.6 and 3.3.3.7 (psi)
$F_{bry\text{-}allow}$ is the temperature adjusted yield bearing allowable per PM4057, Sections 3.3.3.6 and 3.3.3.7 (psi)
D_{bolt} is the fastener diameter (in)
t is the thickness of the joint layer being analyzed (in).

The t/D_{bolt} ratio lower cutoff, 0.18, represents the ratio below which a bearing type failure does not occur and failure cannot be predicted. Instead the sheet experiences local instability or buckling at the edge of the hole. Any joints designed with t/D_{bolt} below the cutoffs must be tested to ultimate to verify static strength.

The t/D_{bolt} upper cutoff, 1.0, represents the situation where the bolt is flexible relative to the joint layer and the bearing stress is no longer reasonably considered uniform across the thickness. Bearing peaking will occur and the pin in the joint must be analyzed per Section 5.3.4 as a pin-in-a-socket.

The properties for bearing yield and bearing ultimate are based on testing of parts with end-distance to fastener-diameter ratios of 2.0 and 1.5. It is general practice to use the minimum of edge or end distance for the determination of bearing allowables and if e/D is greater than 2.0, an e/D=2.0 is used. See Figure 5.2.3-9 for some suggestions in how to determine e/D for use in selecting the appropriate bearing material property when loading is off-axis for use in salvage/repair analysis.

Copyright 2017 Lockheed Martin Corporation.
Note: The current version is always the version on the Lockheed Martin network.

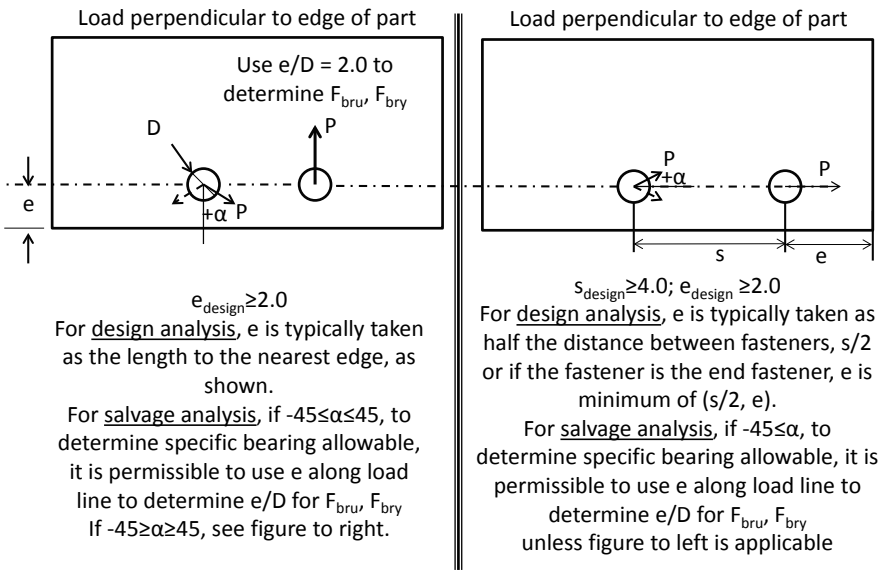

Figure 5.2.3-9 Selection of e/D for Determination of Bearing Material Property

For calculating the bearing of countersink fasteners, several factors must be accounted for. Testing has shown that the full thickness of the material in the region of the head is not effective in bearing so only a portion of the head material is used. In addition, countersunk fasteners are often installed subflush or below the surface of the joint material for aerodynamic or other considerations. Figure 5.2.3-10 depicts the geometry of a countersink fastener joint.

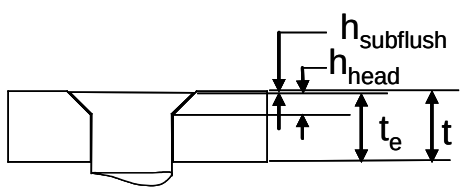

Figure 5.2.3-10 Geometry Consideration for Countersink Bearing Calculations

The preliminary allowable bolt load due to bearing for a countersink fastener is given by

$$t_e = t - h_{subflush}$$

$$P_{br\text{-}ult} = F_{bru\text{-}allow} D_{bolt} (t_e - h_{head}/2) \quad \textbf{Equation 5.2.3-5}$$

$$P_{br\text{-}yield} = F_{bry\text{-}allow} D_{bolt} (t_e - h_{head}/2) \quad \textbf{Equation 5.2.3-6}$$

where
t is the thickness of the joint layer being analyzed (in)
$h_{subflush}$ is the distance the fastener is countersunk below the surface of the joint layer(in)
t_e is the effective thickness of the joint layer being analyzed (in)
$F_{bru\text{-}allow}$ is the ultimate temperature corrected bearing allowable per PM4057, Sections 3.3.3.6 and 3.3.3.7. (psi)
$F_{bry\text{-}allow}$ is the yield temperature corrected bearing allowable per PM4057, Sections 3.3.3.6 and 3.3.3.7. (psi)
D_{bolt} is the fastener diameter (in)
h_{head} is the height of the fastener head (in)

Copyright 2017 Lockheed Martin Corporation.
Note: The current version is always the version on the Lockheed Martin network.

Note: While bearing strength of countersink fasteners can be a substitute for joint allowables discussed in the next few paragraphs at some low t/D ranges, it is unconservative in intermediate t/D ranges referred to as transition region in Section 9 of Reference 5-4. This calculation should be used for preliminary design only and appropriate joint margins should be obtained by test.

The margin of safety in bearing is given by Equation 5.2.3-7. If this calculation is not for a fitting, $K_{ftg} = 1.0$.

$$M.S. = P_{br\text{-}ult}/(K_{ftg}P_{bolt\text{-}ultimate})-1 \quad \text{(Ultimate)} \qquad \textbf{Equation 5.2.3-7}$$

$$M.S. = P_{br\text{-}yield}/P_{bolt\text{-}limit}-1 \quad \text{(Yield)}$$

where
$P_{br\text{-}ult}$ is the ultimate allowable bolt load from Equation 5.2.3-3 (lbs)
$P_{br\text{-}yield}$ is the yield allowable bolt load from Equation 5.2.3-4(lbs)
K_{ftg} is the appropriate, program approved fitting factor, if applicable. (See Discussion, Section 5.2.3).
$P_{bolt\text{-}ultimate}$ is the applied ultimate bolt resultant shear load (lbs).
$P_{bolt\text{-}limit}$ is the applied limit bolt resultant shear load. It should be based on an elastic distribution and may be equal to $P_{bolt\text{-}ultimate}/1.5$ (lbs)[6]

Since bearing type failures which cause local yielding at the hole have the capability for redistribution, static strength margins written against bearing can be based an ultimate distribution, that is, taking the total bearing capability of the joint and comparing that to the total load present in the joint. Fitting factors are still applicable, where appropriate. Yield analysis should ALWAYS be based on an elastic distribution.

Testing has shown that flush head fasteners in countersunk or dimpled sheet, fasteners with hollow or multiple piece shanks, and protruding shear head fasteners may not develop either the fastener shear capability or bearing strength of the material. This type of failure is deemed a joint failure and can be one or a combination of several failure modes including failure of the fastener head or tail (nut, collar, etc), excessive rotation of the fastener, or early bearing or shear tear-out failure. This is a failure which is not analytically predicted but obtained through testing of fastener families through a range of sheet thicknesses. For these fasteners, the bearing strength calculation, as shown above is not applicable and a joint allowable is determined from test.

The joint allowables for many fasteners are published in Reference 5-4 and additional fasteners can be found in Reference 5-1, SM65d. The margin of safety is calculated from

$$M.S. = P_{joint\text{-}allow} / (K_{ftg}\, P_{bolt\text{-}ultimate}) - 1 \qquad \textbf{Equation 5.2.3-8}$$

where
$P_{joint\text{-}allow}$ is the fastener/sheet joint strength allowable from Reference 5-4 or Reference 5-1, SM65d (lbs) for appropriate thickness sheet and with appropriate correction factors per SM65d (lbs)
K_{ftg} is the appropriate, program approved fitting factor. (See Discussion, Section 5.2.3).
$P_{bolt\text{-}ultimate}$ is the applied ultimate bolt resultant shear load (lbs).

Because these fastener allowables are based on testing which result in a variety of failure modes, they may not be capable of exhibiting any redistribution capability as discussed in Section 5-9 and thus, engineering judgment should be used on the applicability of ultimate fastener load distributions in specific situations.

Shear tearout is a mode of failure when the material between the fastener and the edge of the part tears out as is shown in Figure 5.2.3-11. For joints which maintain end distances of 2D or greater, this failure mode is generally not critical.

[6] Factor assumes an aircraft criterion of no yield at limit load. This should be adjusted for other criteria such as no yield at 1.15xLimit Load as is used on many fighter aircraft programs.

Copyright 2017 Lockheed Martin Corporation.
Note: The current version is always the version on the Lockheed Martin network.

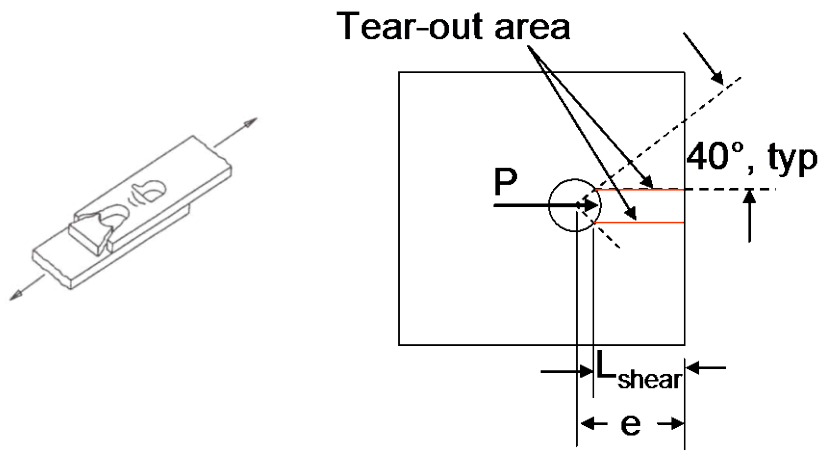

Figure 5.2.3-11 Shear Tear Out Area

The allowable bolt load to preclude shear tearout at the ligament can be calculated from

$$L_{shear} = [(e\text{-}D/2) + (0.234D/2)]$$ **Equation 5.2.3-9**

$$P_{tearout} = 1.1(2)F_{su}\, L_{shear}\, t$$ **Equation 5.2.3-10**

where
e is the end distance from the hole to the edge of the part along the load line (in).
D is the diameter of the hole (in)
F_{su} is the allowable temperature corrected ultimate shear stress obtained from Reference 5-4 (psi)
L_{shear} is the shear ligament as calculated above. (in)
t is the thickness of the layer being analyzed (in).
1.1 is an empirically derived factor based on test data.
0.234 factor assumes the shear tearout ligament is 40 degrees from the horizontal per Figure 5.2.3-11

The margin of safety in shear tear-out is given by Equation 5.2.3-11. If this calculation is not for a fitting, K_{ftg} = 1.0.

$$M.S. = P_{tearout} / (K_{ftg}\, P_{bolt\text{-}ultimate\text{-}edge}) - 1$$ **Equation 5.2.3-11**

where
K_{ftg} is the appropriate, program approved fitting factor, as applicable. (See Discussion, Section 5.2.3).
$P_{tearout}$ is the allowable bolt load due to shear tear-out (lbs).
$P_{bolt\text{-}ultimate\text{-}edge}$ is the applied ultimate bolt shear load in the edgewise direction (lbs).

Shear tearout is a catastrophic failure without redistribution, thus, the bolt load used in this type of analysis should be based on an elastic distribution. The sensitivity to shear tear-out is a function of the end distance of the fastener as well as the thickness of the material. For aircraft grade aluminum (Fsu ~ 45000 psi), at an e/D ratio of 2.0, if the material thickness is greater than half the fastener diameter, the shear tear-out capability will approximately equal the fastener shear capability of a 95 ksi shear allowable fastener. This is shown in Figure 5.2.3-12. Shear tear out is also affected if the part is chamfered at the end. An equivalent area can be calculated for the chamfered ligament. If necessary, the end distance can then be adjusted for a positive margin.

Copyright 2017 Lockheed Martin Corporation.
Note: The current version is always the version on the Lockheed Martin network.

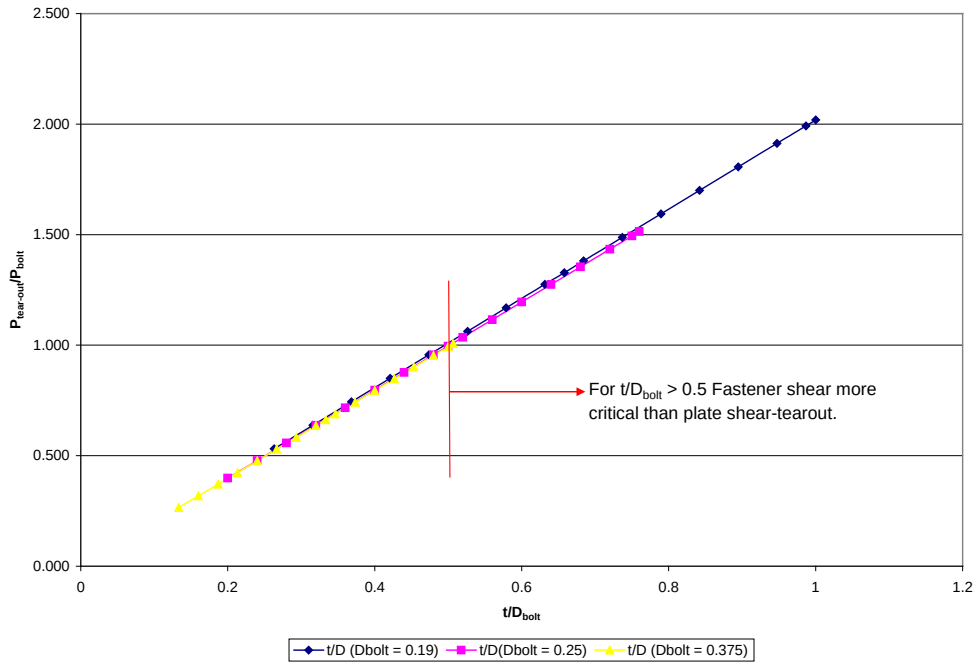

Figure 5.2.3-12 Comparison of Allowable Shear Tear-out Load (F_{su}=45000 psi) with Fastener Shear Capability (95000 psi) for e/D=2.0

The various layers of the joint should also be analyzed for net section tension capability. This is to ensure there is sufficient remaining material after the fastener holes are drilled to carry the overall tension or shear load. Net section capability analysis is checking that the cap or splice plate has the capability to carry the axial tension load in the remaining material once the fastener holes have been drilled. Figure 5.2.3-13 illustrates a simple splice plate.

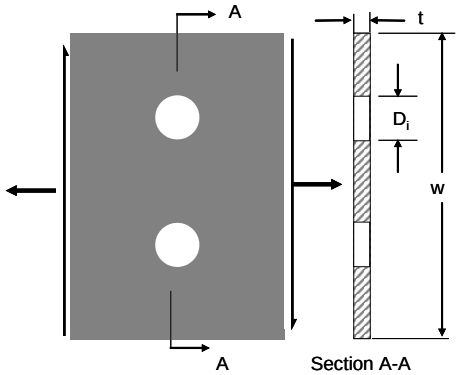

Figure 5.2.3-13 Typical Joint Geometry

Net section tension failure mode is sensitive to the edge distance of the part and not the end distance. A net section reduction factor, η, can be calculated by

Copyright 2017 Lockheed Martin Corporation.
Note: The current version is always the version on the Lockheed Martin network.

Equation 5.2.3-12

$$\eta = 1 - \frac{\sum D_i t}{A_g}$$

where
A_g is the gross area of the cross-section perpendicular to the tension load line or parallel to the shear load line from Equation 5.2.3-18. (in^2)
D_i is the hole diameter of the ith fastener (in)
t is the thickness of the plate (in)

This is generally applicable for joints in which the fastener pattern is uniform, fasteners are of similar size, and spacing between fasteners is 4D or greater. If the fasteners are countersunk, Table 5.2.3-5 provides information on the area removed due to a 100° countersunk fastener. This value may be used in lieu of *($D_i t$)*, (diameter of the fastener hole X thickness of material) in the above equation.

Fastener Head Style	Nominal Shank Dia (in)	Sheet Thickness (in)											
		0.025	0.032	0.040	0.050	0.063	0.071	0.080	0.090	0.100	0.125	0.160	0.190
MS20426 Rivet	1/16	0.00213	0.00260	0.00314	0.00381	0.00468	0.00522	0.00582	0.00649	0.00716	0.0883	0.01118	0.01319
	3/32	0.00373	0.00451	0.00529	0.00625	0.00750	0.00826	0.00913	0.01009	0.01105	0.01345	0.01681	0.01969
	1/8	0.00563	0.00694	0.00829	0.00977	0.01146	0.01248	0.01364	0.01493	0.01621	0.01942	0.02392	0.02778
	5/32	0.00640	0.00793	0.00953	0.01132	0.01340	0.01467	0.01610	0.01769	0.01928	0.02325	0.02882	0.03359
	3/16	0.00808	0.01008	0.01221	0.01467	0.01751	0.01907	0.02079	0.02270	0.02461	0.02938	0.03607	0.04180
	1/4	0.01116	0.01401	0.01713	0.02082	0.02526	0.02779	0.03045	0.03319	0.03576	0.04218	0.05118	0.05889
NAS517 Screw	No. 10 (0.190)	0.00878	0.01097	0.01333	0.01607	0.01927	0.02104	0.02286	0.02479	0.02673	0.03156	0.03834	0.04414
	1/4	0.01183	0.01488	0.01821	0.02217	0.02696	0.02971	0.03261	0.03562	0.03838	0.04471	0.05353	0.06109
	5/16	0.01501	0.01894	0.02329	0.02852	0.03496	0.03872	0.04277	0.04705	0.05180	0.06013	0.07124	0.08072
	3/8	0.01818	0.02300	0.02837	0.03487	0.04296	0.04774	0.05293	0.05848	0.06378	0.07600	0.09061	0.10192
	7/16	0.02316	0.02707	0.03345	0.04122	0.05096	0.05676	0.06309	0.06991	0.07648	0.09188	0.11093	0.12495
Shear type Lockbolt or Hi-Lok	3/16	0.00687	0.00853	0.01028	0.01226	0.01472	0.01624	0.01794	0.01984	0.02173	0.02647	0.03310	0.03879
	1/4	0.00923	0.01154	0.01405	0.01697	0.02040	0.02240	0.02464	0.02714	0.02963	0.03587	0.04460	0.05209
	5/16	0.01122	0.01410	0.01724	0.02096	0.02543	0.02798	0.03079	0.03391	0.03703	0.04483	0.05575	0.06511
	3/8	0.01341	0.01690	0.02074	0.02533	0.03094	0.03419	0.03767	0.04141	0.04516	0.05452	0.06763	0.07886

Table 5.2.3-5 Area Removed Due 100° Countersunk Fasteners

If the joint is more complicated with multiple fastener diameters and less than 4D or irregular spacing an alternate method for the calculation of the net section reduction factor is given below. Figure 5.2.3-14 shows the typical geometry of a multi-fastener splice. Although it looks much like a skin splice, the net section factors developed using this method are applicable for other types of joints as well.

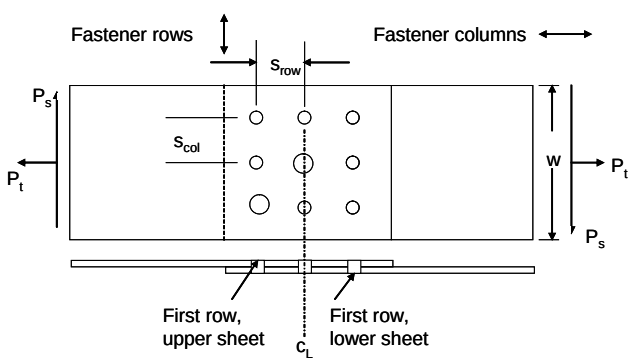

Figure 5.2.3-14 Typical Geometry, Multi-Row Splice

In order to calculate the net section efficiency factor, η, for this more complicated problem, first determine the spacing, s_{row}, between the first and second row of the layer being analyzed. The first row, as depicted in Figure 5.2.3-14, is the row furthest from the free edge of the layer.

Copyright 2017 Lockheed Martin Corporation.
Note: The current version is always the version on the Lockheed Martin network.

The reduction in cross-sectional area due to the largest hole in the first row and all of the holes in the first row (including the largest) must be determined. For countersunk fasteners, R_{large} can be obtained from Table 5.2.3-4. For non-countersunk fasteners this can be calculated. Thus

$$R_{large}=t\,D_{large} \text{ (non-countersunk fasteners)} \qquad \textbf{Equation 5.2.3-13}$$

R_{large} see Table 5.2.3-5 (countersunk fasteners)

$$\Sigma R_{1:all}=\Sigma(t_i\,D_i) \text{ (non countersunk fasteners)} \qquad \textbf{Equation 5.2.3-14}$$

$\Sigma R_{1:all}=\Sigma R_{1:i}$ from Table 5.2.3-5 (countersunk fasteners)

where
t is the thickness of the layer being analyzed (in)
D_{large} is the actual hole diameter of the largest hole in the first row[7] of the layer being analyzed. (in).
D_i is the actual hole diameter of the ith hole in the first row of the layer being analyzed. (in).
t_i is the thickness of the layer being analyzed at the ith hole (in)

In addition, the total reduction in cross-sectional area due to all fasteners within 5D of the first row must be calculated, where D is taken as the diameter of the largest hole in the first row. This is done by projecting their area, along with the areas of fasteners in row 1, onto a plane parallel to the centerline of the joint, i.e. all of the fasteners are assumed to be acting on the same tension plane. *If fastener projected areas overlap, in part or completely, the area should not be counted twice*. This is illustrated in Figure 5.2.3-15. So,

$$\Sigma R_{1:5D}= \Sigma(t_i\,D_{projected\text{-}i}) \text{ (non-countersunk fasteners)} \qquad \textbf{Equation 5.2.3-15}$$

OR $\Sigma R_{5D}= \Sigma R_{1:all} + \Sigma R_{1:i}$ from Table 5.2.3-5

where
$\Sigma R_{1:all}$ is the reduction in area due to the first row of fasteners from Equation 5.2.3-14.
$D_{projected\text{-}i}$ is the actual hole diameter of the ith hole within 5D of the first row of the layer being analyzed. (in).
t_i is the thickness of the layer being analyzed at the ith hole (in)

The effective diameter of the largest hole in the first row can be obtained from Equation 5.2.3-16. For non-countersunk holes, $D_{e\text{-}large}$ and $D_{hole\text{-}large}$ are the same value.

$$D_{e\text{-}large}=R_{large}/t \qquad \textbf{Equation 5.2.3-16}$$

where
R_{large} is the reduction in cross-sectional area due to the largest hole in the first row from Table 5.2.3-5 or Equation 5.2.3-13.
t is the thickness of the joint layer under analysis (in)

[7] The first row is the row furthest from the free edge.

Copyright 2017 Lockheed Martin Corporation.
Note: The current version is always the version on the Lockheed Martin network.

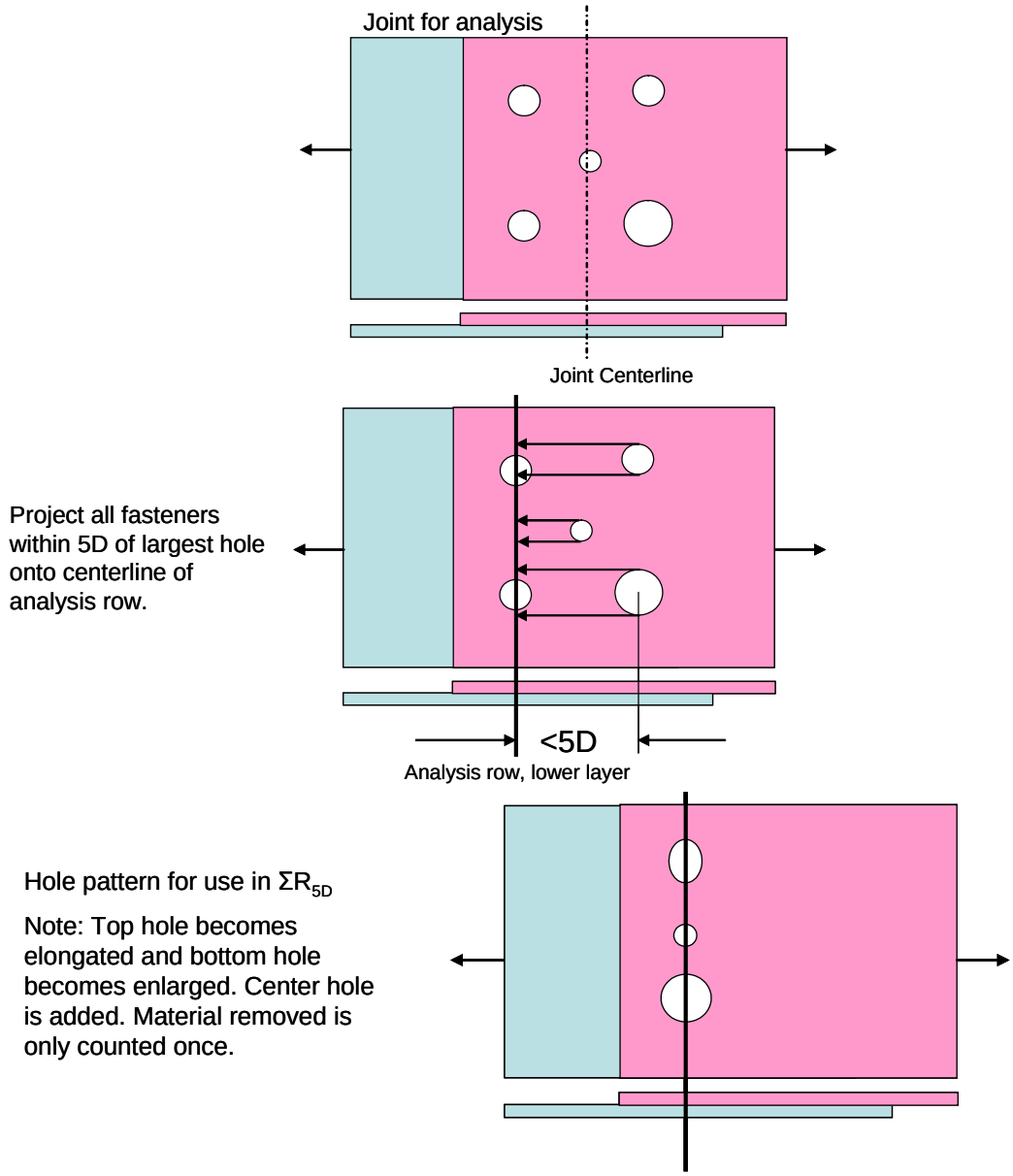

Figure 5.2.3-15 Hole Projection Illustration

Copyright 2017 Lockheed Martin Corporation.
Note: The current version is always the version on the Lockheed Martin network.

The effective reduction in area can now be obtained from

$$R_{area} = \sum R_{1:5D} - \left(\frac{s_{row}}{5D_{e-large}}\right)\left(\sum R_{1:5D} - \sum R_{1:all}\right) \qquad \textbf{Equation 5.2.3-17}$$

where
$\Sigma R_{1:5D}$ is the reduction in area due to the first row of fasteners and all fasteners within 5D of the first row from Equation 5.2.3-15
$\Sigma R_{1:all}$ is the reduction in area due to the first row of fasteners from Equation 5.2.3-14.
$D_{e\text{-}large}$ is the effective hole diameter of the largest hole in the first row of the layer being analyzed from Equation 5.2.3-16. (in).
s_{row} is the spacing between the first two rows of fasteners (see Figure 5.2.3-14) (in).

The gross area of the joint can be calculated from

$$A_g = w\ t \qquad \textbf{Equation 5.2.3-18}$$

where
w is the width of the entire joint (in).
t is the thickness of the layer being analyzed (in).

The efficiency (net section reduction) of the joint is then calculated from

$$\eta = Minimum\left[\left(1-\frac{R_{area}}{A_g}\right), \left\{1-\left(\frac{R_{area}}{A_g}\right)^2\left(0.88-\frac{0.18R_{large}}{\sum R_{1:5D}}\right)\right\}\right] \qquad \textbf{Equation 5.2.3-19}$$

where
R_{area} is the effective reduction in area given by Equation 5.2.3-17
A_g is the gross area (in^2)
R_{large} is the reduction in area due to the largest fastener in the first row from Equation 5.2.3-13.
$\Sigma R_{1:5D}$ is the reduction in area due to the first row of fasteners and all fasteners within 5D of the first row from Equation 5.2.3-15

When the stress varies across the width of the joint or if the hole pattern is not constant, the maximum stress at the critical representative width should be used with the efficiency for the critical width.

This method for calculating the efficiency of the joint can be used with other analyses. In that case, the gross area should be calculated in a manner which is consistent with the geometry being analyzed. Additionally, the margin of safety should be calculated per the techniques corresponding with that analysis.

The allowable bolt load and load ratio due to net section tension can be determined as follows. If this calculation is not for a fitting, K_{ftg}=1.0.

$$P_{net\text{-}tension} = F_{tu}\ \eta\ A_g \qquad \textbf{Equation 5.2.3-20}$$

$$R_t = (K_{ftg}\ P_t) / P_{net\text{-}tension} \qquad \textbf{Equation 5.2.3-21}$$

where
$P_{net\text{-}tension}$ is the allowable joint load due to net section tension (lbs).
P_t is the applied total ultimate joint load due to in-plane tension loading perpendicular to net section area (lbs).
A_g is the gross area (in^2)
η is the joint efficiency given by Equation 5.2.3-12 or Equation 5.2.3-19.
F_{tu} is the allowable ultimate tensile stress obtained from Reference 5-4 (psi)
K_{ftg} is the appropriate, program approved fitting factor. (See Discussion, Section 5.2.3 for appropriate application of this factor).

Copyright 2017 Lockheed Martin Corporation.
Note: The current version is always the version on the Lockheed Martin network.

In the absence of an applied in-plane joint tension load, the allowable bolt load and load ratio due to net section shear can be determined as follows. If this calculation is not for a fitting, K_{ftg}=1.0.

$$P_s = N_{xy} w \qquad \textbf{Equation 5.2.3-22}$$

$$P_{net\text{-}shear} = F_{su}\, \eta\, A_g \qquad \textbf{Equation 5.2.3-23}$$

$$R_s = (K_{ftg}\, P_s) / P_{net\text{-}shear} \qquad \textbf{Equation 5.2.3-24}$$

where
P_s is the applied total ultimate joint shear load due to in-plane shear loading parallel to net section area (lbs).
N_{xy} is the running shear load parallel to the joint centerline (lbs/in)
w is the width of the joint (in)
$P_{net\text{-}shear}$ is the allowable joint load due to net section shear (lbs).
A_g is the gross area (in^2)
η is the joint efficiency given by Equation 5.2.3-12 or Equation 5.2.3-19
F_{su} is the allowable ultimate shear stress obtained from Reference 5-4 (psi)
K_{ftg} is the appropriate, program approved fitting factor. (See Discussion, Section 5.2.3 for appropriate application of this factor).

Then, a combined margin of safety for net section due to in-plane shear and tension loads can be calculated from

$$M.S.(combined) = 1/(R_s^2+R_t^2)^{1/2} - 1 \qquad \textbf{Equation 5.2.3-25}$$

where
R_t is the load ratio due to in-plane net section tension loading from Equation 5.2.3-21
R_s is the load ratio due to in-plane net section shear loading from Equation 5.2.3-24

5.2.3.3 Fastener Strength Analysis

In a joint, the fastener is the means of connecting two or more parts together. A fastener may transfer load across its diameter in shear or along its length in tension or both and there are six failure checks that should be considered. These are outlined in the table below. Details on each of these calculations can be found in this section. As with all stress calculations fastener allowables include any temperature corrections necessary.

Recall that fitting factors are not, in general, used in joint margin calculations, unless the joint is a fitting. They are shown in the equations below in the event that a fitting analysis is being performed. See Section 5.3.2 for further discussion. If a fitting analysis is not being performed, K_{ftg} = 1.0. Also note, for margins where the joint is fastener shear critical it is recommended that a minimum 0.15 margin of safety be maintained on fastener shear.

Copyright 2017 Lockheed Martin Corporation.
Note: The current version is always the version on the Lockheed Martin network.

Table 5.2.3-6 Summary of Fastener Analysis Checks

Analysis Check	Equation	Section Reference	Use Preload in R_t
Fastener Shear/Joint Margin	M.S. = $P_{ALLOW\text{-}reduced}/(K_{ftg}\,P_{bolt\text{-}ultimate})-1$ $P_{ALLOW\text{-}reduced}$ is the minimum of the fastener shear allowable and the joint allowable reduced by the loose hole reduction, if applicable.	5.2.3.3	N/A
Fastener Shear –Tension Interaction	Bolts, HiLoks, HiTigues: $R_s^3 + R_t^2=1$ Rivets: $R_s^2 + R_t^2=1$ Lockbolts (Titanium and Steel): $R_s^{10} + R_t=1$ Lockbolts (Titanium – F-35): $R_s^4 + R_t=1$ Lockbolts (Aluminum): $R_s^5 + R_t=1$ where $R_t = K_{ftg}P_{bolt\text{-}tension}/P_{ALLOW\text{-}tension}$ $R_s = K_{ftg}P_{bolt\text{-}ultimate}/P_{ALLOW\text{-}shear}$	5.2.3.3	No
Fastener Bending: Requires iterative solution	M.S. = $1/R_b-1$ where $R_b=(K_{ftg}P_{bolt\text{-}ultimate})/P_{M\text{-}ALLOW}$	5.2.3.4	No
Fastener Bending-Tension interaction	$R_t^2 + R_b = 1$ where $R_b=(K_{ftg}P_{bolt\text{-}ultimate})/P_{M\text{-}ALLOW}$ $R_t = K_{ftg}P_{bolt\text{-}tension}/P_{ALLOW\text{-}tension}$	5.2.3.4	No
Fastener Tension	M.S. = $P_{ALLOW\text{-}tension} / (K_{ftg}\,P_{bolt\text{-}tension+pre}) - 1$ Required on <u>shear</u> joints if applied tension load is ≥ 40% of fastener tension strength. **Required on ALL tension joints**	5.2.3.3	Yes

A fastener may be in single shear, meaning there is a single shear plane reacting the load within the fastener. A fastener in double shear requires multiple layers in the joint so that two shear planes react the load within the fastener. These are depicted in Figure 5.2.3-16.

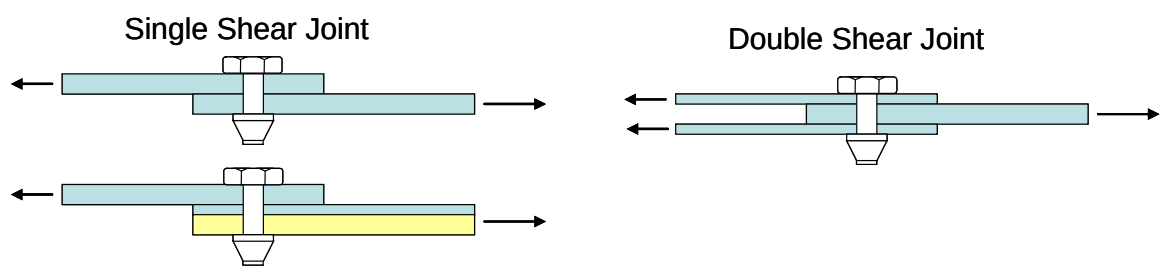

Figure 5.2.3-16 Geometry of Single and Double Shear Joints

Fastener shear allowables, $P_{ALLOW\text{-}shear}$, are available from the IDAT fastener database (IDAT FDB). These should be used whenever available. Additional allowables are available in Reference 5-4 and are also available on data sheets from the Aerospace Industries Association for double shear fasteners. Single shear allowables are one half the double shear values. These allowables are developed using fasteners installed in steel plates. Actual joint testing has shown that flush head fasteners in countersunk or dimpled sheet, fasteners with hollow or multiple piece shanks and protruding shear head fasteners may not develop this shear strength. Joint allowables, $P_{ALLOW\text{-}joint}$, for these types of fasteners are available in Reference 5-4.

Copyright 2017 Lockheed Martin Corporation.
Note: The current version is always the version on the Lockheed Martin network.

The fastener allowables given in the sources above are for fasteners installed in close fit holes. If they are installed in holes with a clearance to diameter percentage of greater than 4, they must be reduced by k_{loose} depicted in Figure 5.2.3-2.

$$P_{ALLOW\text{-}reduced} = P_{ALLOW}\, k_{loose} \qquad \textbf{Equation 5.2.3-26}$$

where
P_{ALLOW} is the temperature adjusted minimum of [$P_{ALLOW\text{-}shear}$, $P_{ALLOW\text{-}joint}$](lbs)
k_{loose} is the loose hole reduction factor from Figure 5.2.3-2

Once the correct allowable and in-plane loads for the fastener have been determined, a margin of safety can be calculated from Equation 5.2.3-27. If the fastener is not installed in a fitting (i.e. $K_{ftg} = 1.0$), and the fastener is shear critical, it is recommended that a minimum 0.15 margin of safety be held on this margin calculation.

$$M.S. = P_{ALLOW\text{-}reduced} / (K_{ftg}\, P_{bolt\text{-}ulimate}) - 1 \qquad \textbf{Equation 5.2.3-27}$$

where
$P_{ALLOW\text{-}reduced}$ is allowable fastener shear strength from Equation 5.2.3-26(lbs)
K_{ftg} is the appropriate, program approved fitting factor, if applicable. (See Discussion, Section 5.2.3).
$P_{bolt\text{-}ultimate}$ is the total applied in-plane fastener shear load resultant (lbs)

Note: It is important to match the type of allowable (double or single shear) with the manner in which the bolt load is applied.

In some applications, fasteners are loaded in tension along their longitudinal axis. This applied loading may come from external sources or it may be induced due to prying of the head/tail as a result of bolt bending. An additional tension load, tension preload, results from the installation torque required to keep mating surfaces in contact. Section 5.2.3.1.3 provides a discussion of torque and a method for calculating the resulting tension preload. Once the tension preload is calculated, it must be combined with the applied tension loads. This combination is not a simple summing of the parts and is described in Section 5.5.2. For shear joint applications in which the torque specified results in a preload of no more than 50% of F_{ty} per Table 5.2.3-2, a separate tension-only margin does not need to be calculated if the applied tension load is less than 40% of the fastener ultimate strength. This guideline comes from the shape of the interaction curve, Figure 5.2.3-18. For shear joints up to an R_t of approximately 0.40, there is little interaction.

Note: The total ultimate tension load on the fastener, including the effects of tension preload cannot exceed the ultimate strength of the fastener. And further, the total limit tension load on the fastener, including the effects of preload cannot yield the fastener threads.

Fastener tension allowables are available from the IDAT FDB. These should be used whenever available. Additional allowables are available in Reference 5-4 and are also available on data sheets from the Aerospace Industries Association. DO NOT calculate allowables for tension strengths of bolts or nuts as this can be unconservative. The tension allowables of the IDAT FDB may have resulted from joint testing done at Lockheed Martin. Occasionally the result of this testing indicates the allowable published on a fastener data sheet may be unconservative. If tension allowables are not available from any of these sources, it is likely the bolt or nut has not been tested in tension and is not appropriate for that application and the analyst and designer should choose another type of bolt or nut for which the tension capability is available.

It is also important to ensure that the nut or collar is matched with the fastener in strength and will allow the joint to develop its full tension capability in these applications; if not, the allowable tension load of the joint is the allowable tension load of the weaker component.

For tension applications, fasteners smaller than 0.25 in dia are not recommended even though tension allowables can be found in the IDAT FDB. They are present in the FDB to allow for analysis of applications where some small amount of secondary tension loading might be present.

Copyright 2017 Lockheed Martin Corporation.
Note: The current version is always the version on the Lockheed Martin network.

In aerospace structural applications, only fasteners with rolled threads are used. Fasteners with cut threads are not desirable due the significantly reduced life caused by the sharp notches found in the thread area.
Once the total tension load and the tension allowable load have been determined, a margin of safety can be calculated by Equation 5.2.3-28. If the fastener is not installed in a fitting, $K_{ftg} = 1.0$.

$$M.S. = P_{ALLOW\text{-}tension} / (K_{ftg}\, P_{bolt\text{-}tension+pre}) - 1 \qquad \textbf{Equation 5.2.3-28}$$

where
$P_{ALLOW\text{-}tension}$ is the fastener tension strength allowable (lbs)
K_{ftg} is the appropriate, program approved fitting factor, if applicable. (See Discussion, Section 5.2.3)
$P_{bolt\text{-}tension+pre}$ is the total bolt tension load including preload, combined per Section 5.5.2 (lbs)

Although the Margin of Safety for tension loading in the bolt includes the effects of preload, the tension-shear interaction equations described in Equations 5.2.3-30 through 5.2.3-33 do not. If a fastener has both axial tension load and shear, the individual stress ratios can be calculated from Equation 5.2.3-29. If the fastener is not installed in a fitting, $K_{ftg} = 1.0$.

$$R_t = (K_{ftg}\, P_{bolt\text{-}tension}) / P_{ALLOW\text{-}tension} \qquad \textbf{Equation 5.2.3-29}$$
$$R_s = (K_{ftg}\, P_{bolt\text{-}ultimate}) / P_{ALLOW\text{-}shear}$$

where
$P_{ALLOW\text{-}tension}$ is the temperature adjusted fastener tension strength allowable (lbs)
$P_{bolt\text{-}tension}$ is the externally applied or induced bolt tension load (excluding preload) (lbs)
$P_{ALLOW\text{-}shear}$ is allowable fastener shear strength from Equation 5.2.3-26 (lbs)
$P_{bolt\text{-}ultimate}$ is the applied in-plane bolt load resultant (lbs)
K_{ftg} is the appropriate, program approved fitting factor, if applicable. (See Discussion, Section 5.2.3).

The interaction equation for combined axial tension load and shear is given by

$$\textit{Bolts, HiLoks, HiTigues: } R_s^3 + R_t^2 = 1 \qquad \textbf{Equation 5.2.3-30}$$
$$\textit{Rivets: } R_s^2 + R_t^2 = 1 \qquad \textbf{Equation 5.2.3-31}$$
$$\textit{Lockbolts (Titanium and Steel): } R_s^{10} + R_t = 1$$
$$\textit{Lockbolts (Titanium: F-35): } R_s^4 + R_t = 1 \qquad \textbf{Equation 5.2.3-32}$$
$$\textit{Lockbolts (Aluminum): } R_s^5 + R_t = 1 \qquad \textbf{Equation 5.2.3-33}$$

Aluminum lockbolts should not be used in primary tension applications as the test data indicates they can consistently fall below the allowable interaction curve. Figure 5.2.3-17 illustrates the range of validity. It is recommended that the tension load magnitude be less than 70% of the shear load magnitude for aluminum lockbolts.

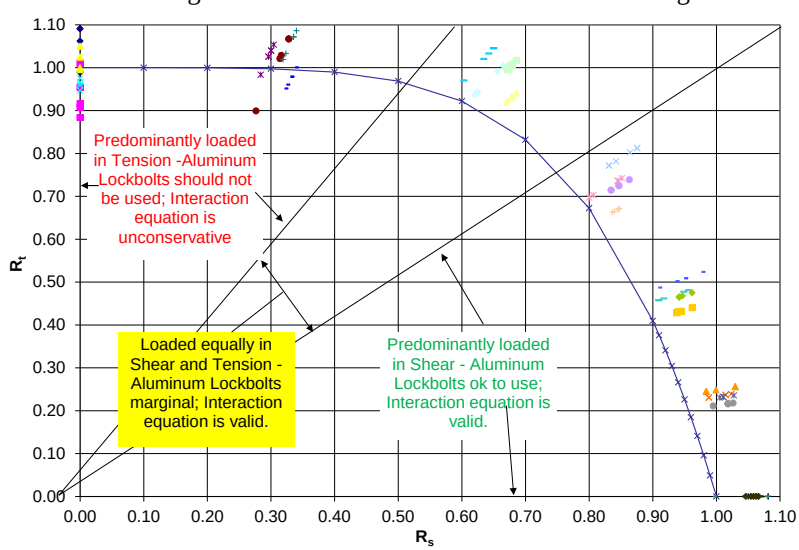

Figure 5.2.3-17 Range of Applicability for Aluminum Lockbolt Interaction Equation

Copyright 2017 Lockheed Martin Corporation.
Note: The current version is always the version on the Lockheed Martin network.

Titanium lockbolts have limited testing available[8] and mostly in shear joint applications with limited applied tension load. It is also recommended that titanium lockbolts be used in predominantly shear applications with the tension load magnitude not exceeding 70% of the shear load magnitude.

Figure 5.2.3-18 shows the four interaction curves listed above. Notice that the steel and titanium lockbolt interaction equation is almost rectangular, indicating little interaction. It is conservative to use the same interaction for steel and titanium lockbolts as for bolts, HiLoks and HiTigues. But it would be unconservative to use Equation 5.2.3-30 for the aluminum lockbolts. These interaction equations are also appropriate for metal-composite and composite-composite joints.

To calculate a margin of safety for Equation 5.2.3-30 through 5.2.3-33 plot R_s and R_t on the appropriate curve given in Figure 5.2.3-18 as point A. Draw line OA and extend it to intersect the curve at point B. Read $R_{t\text{-allow}}$ or $R_{s\text{-allow}}$ as shown in Figure 5.2.3-18.

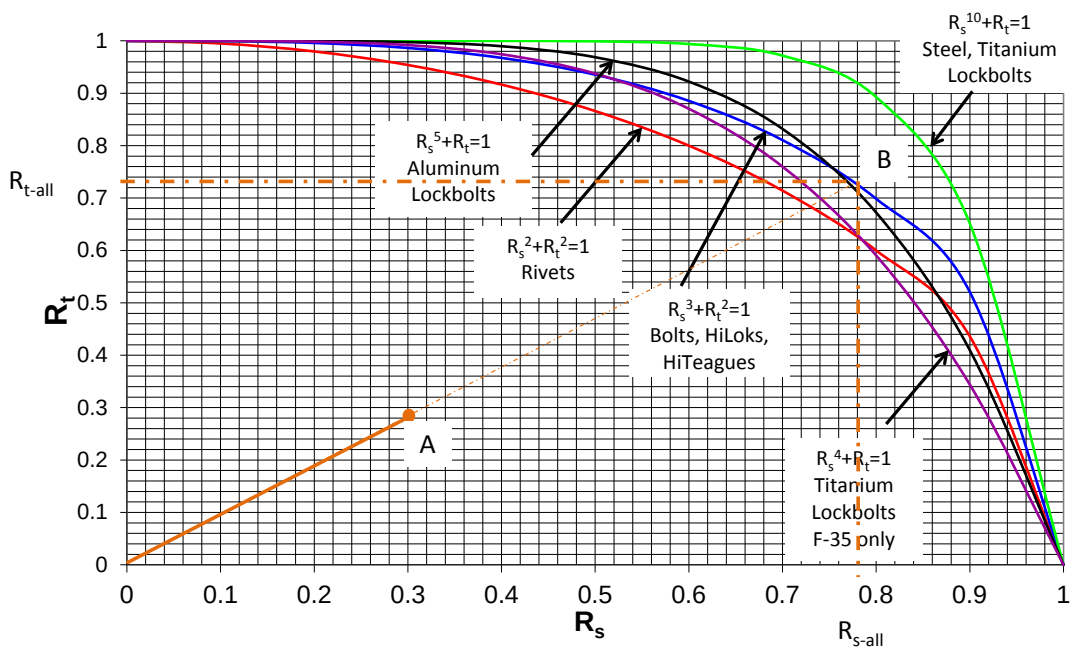

Figure 5.2.3-18 Fastener Interaction Curves

The margin of safety for bolts, HiLoks, HiTigues, etc., and all Lockbolts can then be calculated as

$$M.S. = R_{s\text{-allow}}/R_s - 1 \text{ or } R_{t\text{-allow}}/R_t - 1 \qquad \textbf{Equation 5.2.3-34}$$

where
R_s, R_t are the stress ratios calculated in Equation 5.2.3-29
$R_{s\text{-allow}}$, $R_{t\text{-allow}}$ are the allowable stress ratios obtained from the appropriate curves of Figure 5.2.3-18.

The margin of safety for fastener interactions described by Equations 5.2.3-30, 5.2.3-32 and 5.2.3-33 can also be obtained by iteration. First these equations are formulated using a load factor which can be used to factor the load ratios up or down simultaneously and once the equality is satisfied, the load ratio can be used to calculate the margin of safety. This is shown for Equation 5.2.3-30 in Equation 5.2.3-35

[8] It is for this reason, the F-35 program has modified the interaction equation to be more conservative as shown in Table 5.2.3-5.

Copyright 2017 Lockheed Martin Corporation.
Note: The current version is always the version on the Lockheed Martin network.

$$Bolts,\ HiLoks,\ HiTigues: (k_{rdc}R_s)^3 + (k_{rdc}R_t)^2 = 1$$
$$M.S. = k_{rdc} - 1 \qquad \textbf{Equation 5.2.3-35}$$

where
R_s, R_t are the stress ratios calculated in Equation 5.2.3-29
k_{rdc} is the load factor necessary to make the left hand terms of the equation equal to 1

The margin of safety for rivets resulting from Equation 5.2.3-31 does not require iteration and is given by

$$M.S. = 1/(R_s^2 + R_t^2)^{0.5} - 1 \qquad \textbf{Equation 5.2.3-36}$$

where
R_s, R_t are the stress ratios calculated in Equation 5.2.3-29

5.2.3.4 Bolt Bending Analysis and a Word on Bolt Fatigue

Bolt bending is generated by the eccentricity of bolt-hole bearing loads reacted by head/nut moments. The magnitude of bolt bending present is determined by balancing a free-body of the bolt. The severity of the bolt bending is a function of the total stack-up, shim thickness and bolt characteristics and is unrelated to edge distance and panel fixed-edge moments except to the degree that prying loads affect bolt tension interaction checks. The ability of the bolt to withstand bolt bending is a function of the head and tail styles and the bolt shank.

Some programs dictate when bolt bending analysis must be performed and others leave it to the judgment of the engineers most familiar with the structure. Note, however, for existing structure on legacy aircraft, if bolt bending analysis was not required per the initial program and the structure has passed testing with no reported fleet problems it is not advised that bolt bending analysis be applied as a general rule. If a modification or repair has occurred or is being analyzed, a bolt bending analysis may be performed.

Figure 5.2.3-19 lists the considerations when screening for joints where bolt bending may be an issue.

Joint Layers	$t_{layer}/D_{hole} \leq 1.0$		$t_{layer}/D_{hole} > 2.0$
	$t_{total}/D_{hole} \leq 2.0$		$t_{total}/D_{hole} > 4.0$
	Metal-Metal	Metal-Composite	Composite-Composite
Shims	Hard Shim	Soft Shim	Rubber Gasket Air Gap
	$t_{shim} \leq 0.15D_{fas}$		$t_{shim} > 0.25D_{fas}$
Fastener Fit	$D_{hole}-D_{fas} \leq 0.004$		$D_{hole}-D_{fas} \geq 0.015$
	Increasing Probability of Bolt Bending Concerns		
	Analysis not typically required		Analysis is recommended

Figure 5.2.3-19 Considerations for Determination if Bolt Bending Analysis is Recommended

Copyright 2017 Lockheed Martin Corporation.
Note: The current version is always the version on the Lockheed Martin network.

If a particular application falls entirely within the parameters of the left-most column, typically a bolt bending analysis would not be necessary. As one or more of the joint parameters listed in Figure 5.2.3-19 move toward the right that would indicate an analysis should be considered. If multiple parameters are in the right-most column, an analysis is recommended.

Stabilized joints can also reduce the bolt bending susceptibility. In this particular use of the term "stabilized" it is a function of both the load direction and the physical make-up of the joint. A stabilized joint has a structural stack-up which resists bending due to the primary component of bolt loading. In contrast, a non-stabilized joint results from a structural stack-up that can rotate and flex due to the primary component of the bolt loading.

Figure 5.2.3-20 shows fastener system susceptibility to bending failures. The fasteners in the right-most column are not recommended for joints in which bending is likely to occur. If they are used, a bolt bending analysis is required.

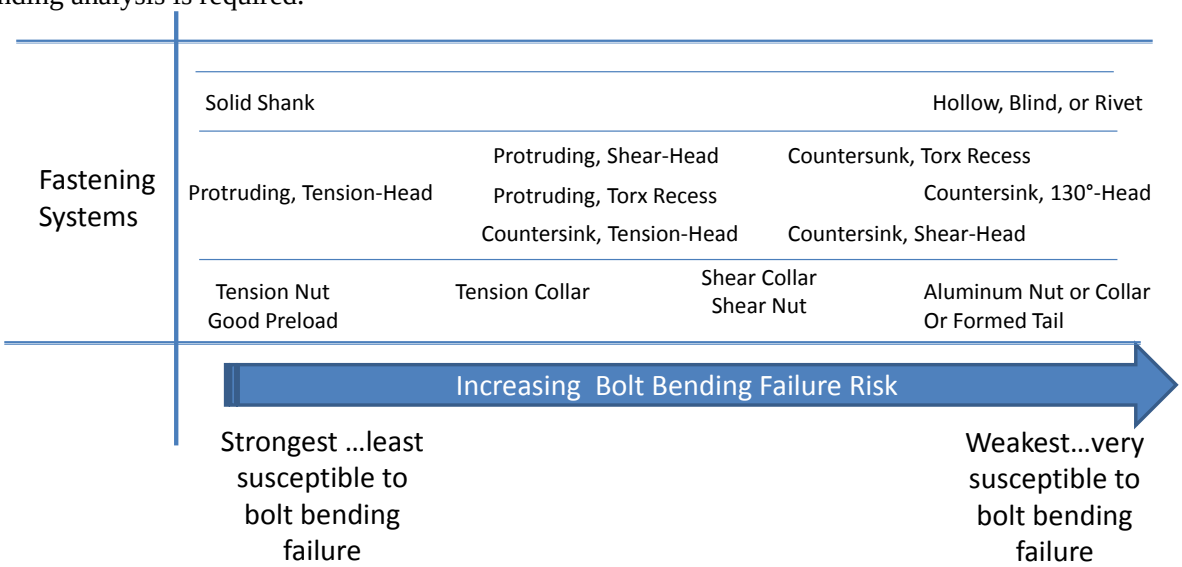

Figure 5.2.3-20 Bolt Susceptibility to Bending Failure

Figure 5.2.3-21 illustrates the overall joint geometry/loads which can result in bolt bending if considerations of the conditions of Figure 5.2.3-19 indicate bolt bending is likely.

No simple diagram, such as those shown in Figure 5.2.3-21 is going to encompass every analysis situation. If bolt bending is suspected, the best way to resolve the need for analysis is to construct a free body diagram and examine the load and moment magnitudes. Examine the source of the eccentricity, the applied loads, the possible stabilizing characteristics of the joint[9] and consider other rational ways of reacting any bending moments, such as heel-toe, if appropriate.

Typically the same joint drivers for bolt bending, as illustrated in Figures 5.2.3-19, 5.2.3-20, and 5.2.3-21 can also drive bolt fatigue, particularly in composite-metallic or composite-composite joints. Bolt fatigue analysis of bolts in metal-metal structure is not typically conducted except for highly loaded shear joints with fastener bending and tension present. Many legacy aircraft conducted fatigue testing of this type of joint in lieu of performing analysis.

[9] Stabilizing characteristics are features of the structure which would serve to prevent the rotation of the joint.

Copyright 2017 Lockheed Martin Corporation.
Note: The current version is always the version on the Lockheed Martin network.

Another consideration of susceptibility to bolt bending might be the type of aircraft. Fighter aircraft, with the higher load cycles might have more bolt bending issues than transport or reconnaissance aircraft for the same joint design.

Inherent to the assumption of the bolt fatigue analysis is that, when designing aircraft, aerospace grade fasteners with 95 ksi shear strength or higher are used and they are torqued appropriately to preload the fastener. High strength fasteners, such as Inconel and MP-35, are somewhat less susceptible to fatigue.

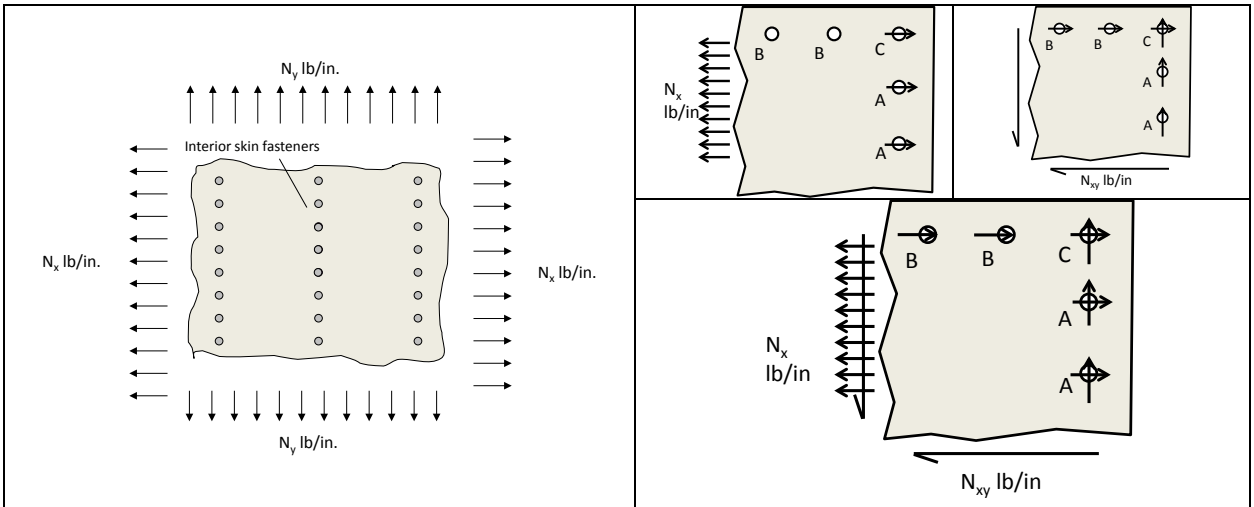

Assume for discussion below, all fasteners are the same size and substructure is continuous.

- Interior fasteners typically do not undergo significant bending and do not require analysis
- If, however, bays are of unequal size and there is out-of-plane pressure load applied, net loads due to membrane can result. This can cause bolt bending in intermediate fastener rows.

- Typically loading must apply an in-plane axial load to the joint perpendicular to a free edge to result in significant fastener bending as shown in figure, top left, where N_x load could result in bending in Fasteners “A” or “C” but not in Fasteners “B”.
- In the figure, right top, the shear load, N_{xy}, could result in bending in Fasteners “A” or “B” or “C”, but typically Fastener “C” will be critical because it has shear loads horizontal and vertical shear loading.
- The combined loading is shown in the lower figure where Fastener “C’ is the most critical for bolt bending

Figure 5.2.3-21 Joint/Loading Configurations which Lead to Bolt Bending

The IDAT/SFBOLT program analyzes <u>single shear joints</u> for both static bolt bending and fastener fatigue. In order to execute the fatigue analysis empirically derived correlation factors must be available for the joint configurations (bolt type and material and shim and joint materials) under analysis. These parameters have been developed for the F-35 and F-22 programs and are anticipated to be part of the development testing on future aircraft. Legacy aircraft programs will only be able to utilize SFBOLT for analysis of fasteners common with F-22 or F-35 or if they choose to fund development of the empirical parameters for their unique fastening systems. Additionally, IDAT/SFBOLT requires LOOPIN input data which also may not be available on legacy aircraft programs.

The SFBOLT program is intended to perform analysis of single shear joints and has been correlated to the results from 400 multiple fastener single shear joint tests. But the fatigue program has two limitations:

- Tensile bolt loads due to heel-toe prying resulting from pressure loaded structure are not accounted for in SFBOLT fatigue analysis because this type of loading could not be included in the simple test coupons

Copyright 2017 Lockheed Martin Corporation.
Note: The current version is always the version on the Lockheed Martin network.

used for correlation. The analysis does account for the secondary tensile loads resulting from the eccentric single shear joint. When **significant tension is present,** *i.e.*, more than what would be found in a typical single shear joint due to eccentricity, either due to direct tension loading or heel-toe prying, **SFBOLT does not predict the correct fatigue margin of safety** and an alternative hand analysis must be performed. Full-scale fatigue test failures have been reported when this caution has been ignored.

- SFBOLT's test correlation data includes bolts up to 5/16" in diameter. Bolts larger than 5/16" in diameter should be analyzed using an alternative approach.

Note that SFBOLT uses tensile loads in the static bolt bending analysis; however, if the fastener is predominantly loaded in tension the static analysis does not include all possible failure modes and a hand analysis per this section should be performed.

Finally the assumptions related to the bearing distribution of the fastener shear load are different between the static bolt bending analysis and the bolt fatigue analysis within SFBOLT. In the former, the distribution is assumed to be a uniform distribution as described in PM4057 Figure 5.2.3-19 for metal layers and a triangular transitioning to trapezoidal and then rectangular as described in PM4056 Section 11.5.5.1 for composite layers. For the bolt fatigue analysis, the bearing distribution in all layers is taken from the beam on an elastic foundation model found in IDAT/SSJOINT.

For the IDAT/SFBOLT fatigue program, all joints are assumed to be single lap shear configuration assembled with low-density sealant per AMS 3281 in the joint interface and around the fasteners. Variables accounted for in the fastener fatigue analysis include the following:

- Skin and substructure material (and ply layup, if composite)
- Fastener type, diameter, and material
- Fastener/hole clearance
- Presence of shims
- Load spectrum effects

The freebody diagram for a torqued bolt in bending is shown in Figure 5.2.3-22. In addition to the bending moment developed in the fastener at the intersection of the shank with the head and the nut, respectively, a tension load is developed due to prying of the head and nut. Thus three margins of safety are calculated, bending of the fastener, bending-tension interaction at the head/nut, and a tension-shear interaction at the center of the fastener since this will be the point of maximum shear. Note, from the moment diagram, the bending moment is close to zero at this location and wouldn't be a part of the interaction. Where in the stack-up the moment is zero, is a function of shim thickness and the amount of moment capability in the head and tail respectively.

Copyright 2017 Lockheed Martin Corporation.
Note: The current version is always the version on the Lockheed Martin network.

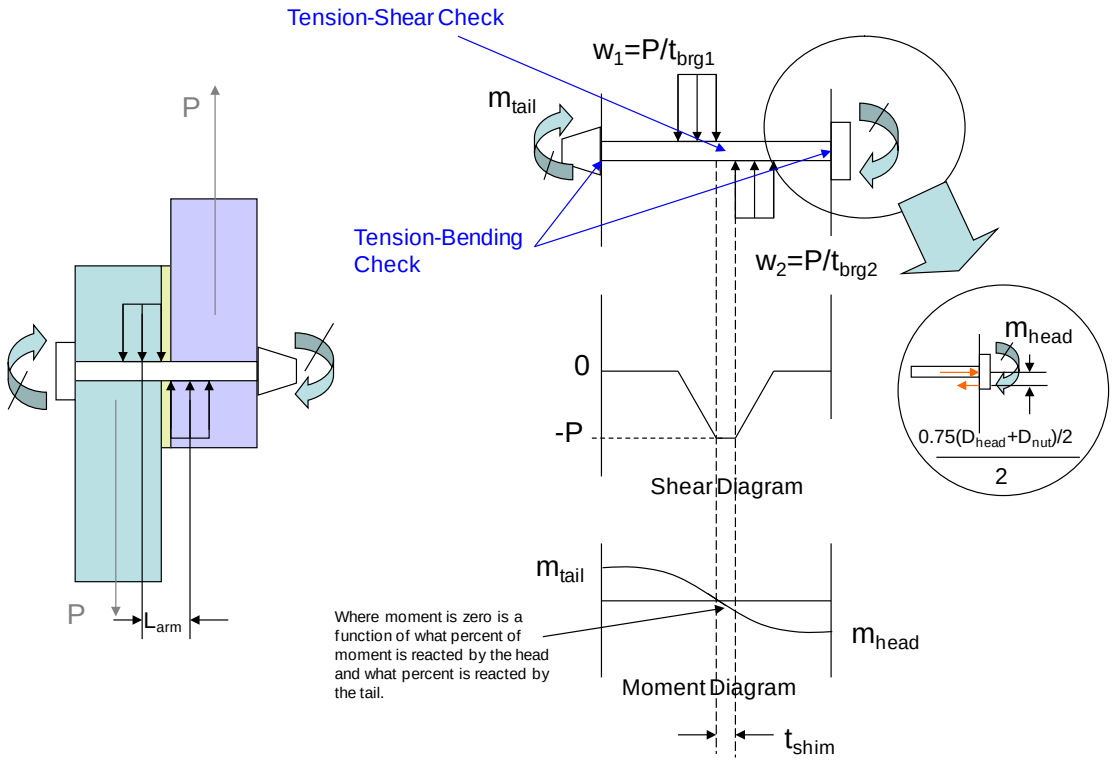

Figure 5.2.3-22 Freebody Diagram of a Torqued Bolt in Bending

If the fastener is torqued appropriately with good clamp up the moment arm, L_{arm}, is shown in Figure 5.2.3-23. It is calculated based on the minimum thickness of each plate required to carry the bearing load plus any shim between the plates. The load is assumed to be uniformly distributed for metallic parts. For composite parts this distribution is assumed to be triangular to more closely match test results. This calculation is detailed in PM4056, Reference5-5. If a joint is mixed metallic-composite, the bearing thickness for each layer should be calculated consistently with the material for each layer. All gaps should be shimmed. The moment arm in an all metallic joints can be calculated from

$$t_{brg1} = P_{bolt\text{-}ultimate} / (F_{bru\text{-}ALLOW\text{-}1}\, D_{bolt})$$
$$t_{brg2} = P_{bolt\text{-}ultimate} / (F_{bru\text{-}ALLOW\text{-}2}\, D_{bolt})$$
$$L_{arm} = (t_{brg1}/2) + L_{shim} + (t_{brg2}/2) \qquad \textbf{Equation 5.2.3-37}$$

where
$P_{bolt\text{-}ultimate}$ is the applied ultimate bolt in-plane resultant load (lbs).
$F_{bru\text{-}ALLOW}$ is the ultimate bearing allowable per PM4057, Sections 3.3.3.6 and 3.3.3.7. (psi)
D_{bolt} is the fastener diameter (in)
L_{shim} is the total thickness of any shim or gap between the two plate layers (in)

See Section 11.5.5 in PM4056 to calculate L_{arm} for a composite laminate.

Copyright 2017 Lockheed Martin Corporation.
Note: The current version is always the version on the Lockheed Martin network.

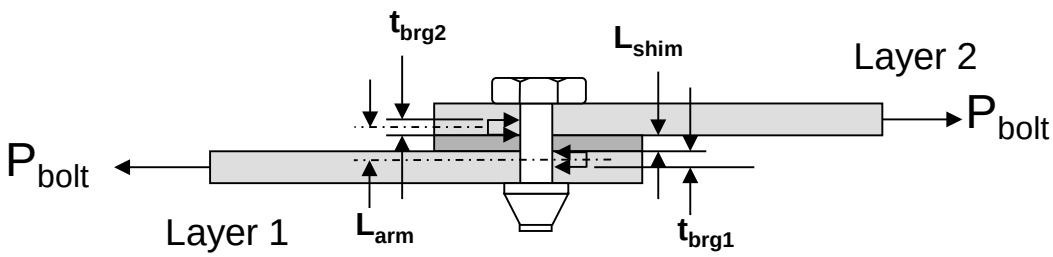

Figure 5.2.3-23 Moment Arm for a Metallic Joint with Clamp-up

The applied bolt bending moment is given by

$$m=0.65P_{bolt\text{-}ultimate}\,L_{arm} \qquad \textbf{Equation 5.2.3-38}$$

where
$P_{bolt\text{-}ultimate}$ is the applied ultimate bolt in-plane resultant load (lbs).
L_{arm} is the moment arm, calculated from Equation 5.2.3-37 (in)
0.65 is the empirical correlation factor from Reference 5-14

It is assumed that the applied moment is reacted jointly by the fastener head and tail in proportion to their respective capabilities. Bending moment allowables are tabulated in the IDAT/Fastener Database (FDB) for various fasteners and nuts. The bending moment allowable for the fastener system is then calculated from

$$M_{allow} = M_{allow\text{-}head} + M_{allow\text{-}tail} \qquad \textbf{Equation 5.2.3-39}$$

where
$M_{allow\text{-}head}$ is obtained from the IDAT/FDB or 6E5 Manuals Group(in-lb)
$M_{allow\text{-}tail}$ is obtained from the IDAT/FDB or 6E5 Manuals Group and is the minimum moment for the tail of the fastener or the nut (in-lb)

Because the moment arm is a function of the bearing thickness which is calculated from the applied load, the moments cannot be directly used to calculate the stress ratio. Instead an equivalent allowable shear load must be determined from the allowable bending moment through an iterative process where P_M is estimated, the bearing thickness for each layer is calculated, L_{arm} is determined and the bending moment, M is calculated. M is compare to M_{allow} and P_M is adjusted until $M = M_{allow}$. Then $P_{M\text{-}ALLOW} = P_M$. This can easily be done in an Excel spreadsheet where the goal seek function is used. Care must be taken to not exceed the thickness of the material layer when calculating $P_{M\text{-}ALLOW}$.

An expression for M in terms of P_M can be derived to aid in this iterative process is given by

$$M = 0.65\left[\frac{P_M^2}{2F_{bru1}D} + \frac{P_M^2}{2F_{bru2}D} + P_M L_{shim}\right]$$

where
P_M is the equivalent allowable bolt shear load which produces the allowable bending moment for a given joint geometry (lb)
F_{bru1},F_{bru2} are the allowable bearing stresses for each layer of the joint (psi)
D is the fastener diameter (in)
L_{shim} is the total thickness of any shim or gap between the two plate layers (in)

Copyright 2017 Lockheed Martin Corporation.
Note: The current version is always the version on the Lockheed Martin network.

Once $P_{M\text{-}ALLOW}$ is determined the stress ratio for bending can be calculated from Equation 5.2.3-39. If the fastener is not installed in a fitting, $K_{ftg} = 1.0$.

$$R_b=(K_{ftg}\ P_{bolt\text{-}ultimate})/P_{M\text{-}ALLOW} \qquad \textbf{Equation 5.2.3-40}$$

where
$P_{M\text{-}ALLOW}$ is the equivalent allowable bolt shear load which produces the allowable bending moment for a given the joint geometry(lb)
$P_{bolt\text{-}ultimate}$ is the applied ultimate bolt in-plane resultant load (lbs).
K_{ftg} is the appropriate, program approved fitting factor. (See Discussion, Section 5.2.3).

The margin for bending only can be calculated from

$$M.S. = 1/R_b-1 \qquad \textbf{Equation 5.2.3-41}$$

where
R_b is the stress ratio from Equation 5.2.3-39

As shown in Figure 5.2.3-22, to calculate the amount of tension load in the bolt due to the bending moment, it is assumed the couple is reacted between the longitudinal axis of the fastener and a location at 75% of the average head and nut radius. This approach results in the average tension load in the bolt due to the moment and is given by

$$P_{t-moment} = \frac{\frac{m}{2}}{\left[0.75\left(\frac{D_{head}}{2}+\frac{D_{nut}}{2}\right)\Big/2\right]}$$

$$P_{t-moment} = \frac{2m}{0.75(D_{head}+D_{nut})} \qquad \text{Equation 5.2.3-42}$$

where
m is the applied moment from Equation 5.2.3-38, including the 0.65 empirical factor. (in-lb)
D_{head} is the head diameter (in)
D_{nut} is the diameter of the nut or collar (in)

This tension load and the externally applied tension load will combine to load the fastener depending upon the fastener preload that is present due to fastener torque specifications. When calculating the margin of safety in tension-only for the fastener, including the prying load from bending, the fastener preload must be included. Section 5.5 discusses how to calculate the tension load on the fastener in the presence of preload. However, for calculating the shear-tension or bending-tension interaction margins, **only the applied and induced tension load due to prying are included**, but not the preload. This approach has been correlated to test.

Once $P_{bolt\text{-}tension}$ has been calculated, a combined margin of safety at the midpoint of the fastener can be obtained for solid fasteners and pins which are undergoing tension and shear, from Equations 5.2.3-30 through 5.2.3-33, as appropriate.
If this is a simple two layer joint, the bending moment is not considered at this location because it is at or near an inflection point at the center of the fastener. In a more complex joint where there are multiple layers, the analyst should construct a freebody diagram of the bolt to determine if there is a concern for the interaction with bolt bending, tension and shear. The following method can be extended for use at those locations.

Copyright 2017 Lockheed Martin Corporation.
Note: The current version is always the version on the Lockheed Martin network.

For solid fasteners and pins where $D_{bolt}/t_{bolt} < 10$, which are undergoing axial tension and bolt bending, the tension-bending interaction must be developed. For most reasonably ductile fastener materials such as alloy steel, titanium and corrosion resistant steel, the interaction exponent, r, is very near 2 and 2 may be used. Thus,

$$R_t^2 + R_b = 1 \qquad \textbf{Equation 5.2.3-43}$$

where
R_t is the tension load ratio given by Equation 5.2.3-29
R_b is the moment load ratio given by Equation 5.2.3-40

$R_{t\text{-ALLOW}}$, $R_{b\text{-ALLOW}}$, the allowable stress or load ratio can be obtained from Figure 6.3.6-2 and then the tension bending utilization factor of Equation 5.2.3-47 can be developed and a margin of safety calculated per Equation 5.2.3-48.

For other less ductile materials the interaction exponent may be derived as follows. The tension-bending interaction is similar to that developed in Section 6.3.6-1, however, a specific solution for solid and hollow circular sections has been developed and is presented here. The interaction equation is a function of both the geometry of a specific cross-section and the material plasticity factor. The basic equation for the geometry factor[10], K_{geom}, is

$$K_{geom} = \frac{Ac}{2Q} = \frac{3\pi}{4} \cdot D_{bolt} \cdot \frac{D_{bolt}^2 - (D_{bolt} - 2t_{bolt})^2}{D_{bolt}^3 - (D_{bolt} - 2t_{bolt})^3} \qquad \textbf{Equation 5.2.3-44}$$

where
A is the total cross-sectional area (in^2)
c is the distance from the neutral axis to the extreme fiber (in)
Q is the first or static moment about the principle axis of the area between the principle axis and the extreme fiber. (in^3)
D_{bolt} is the diameter of the round section (in)
t_{bolt} is the thickness of the fastener. (in)
Note: If the bolt or fastener is solid then $t_{bolt}=D_{bolt}/2$ and $K_{geom}=2.356$.

The interaction exponent, r, is a function of K_{Geom} and is given for a material behaving in a perfectly plastic manner by

$$r_p = 0.329834(K_{geom})^2 - 0.74666K_{geom} + 2.029869 \qquad \textbf{Equation 5.2.3-45}$$

where
K_{geom} is given by Equation 5.2.3-44
Note: If the bolt or fastener is solid then $K_{geom}=2.356$ and $r_p=2.102$

The plasticity is accounted for by

$$r = 1+\gamma(r_p-1) \qquad \textbf{Equation 5.2.3-46}$$

where
γ is the material plasticity factor given by Equation 6.3.6-4
r_p is the interaction exponent for a perfectly plastic material

This is a slightly different formulation than is shown in Figure 6.3.6-1, however this has been specifically developed for a circular cross-section. Using r, as defined in Equation 5.2.3-46, the $R_{t\text{-ALLOW}}$ or $R_{b\text{-ALLOW}}$ can be determined from Figure 6.3.6-2. This will allow the determination of the tension-bending interaction, U_{tb}, from

$$U_{tb} = R_t/R_{t\text{-ALLOW}} = R_b/R_{b\text{-ALLOW}} \qquad \textbf{Equation 5.2.3-47}$$

where
R_t is the ratio of the applied tension load to the allowable tension load per Equation 5.2.3-29
R_b is the ratio of the applied moment to the allowable moment per Equation 5.2.3-40.
$R_{t\text{-ALLOW}}$, $R_{b\text{-ALLOW}}$ are the allowable stress or load ratio obtained from Figure 6.3.6-2

[10] This factor is introduced in Section 6.3.6-1 and developed here specifically for a circular section, solid or hollow.

Copyright 2017 Lockheed Martin Corporation.
Note: The current version is always the version on the Lockheed Martin network.

To calculate the tension bending interaction margin of safety at the fastener threads, the following equation is used.

$$M.S. = 1/U_{tb}-1 \qquad \textbf{Equation 5.2.3-48}$$

where

U_{tb} is the bending tension utilization factor from Equation 5.2.3-47.

5.2.3.5 Example Problems

Several example problems are provided to explore the use of the net section factor and basic joint and bolt bending analysis.

5.2.3.5.1 Example 1 – Basic Lap Splice, Uniform Pattern

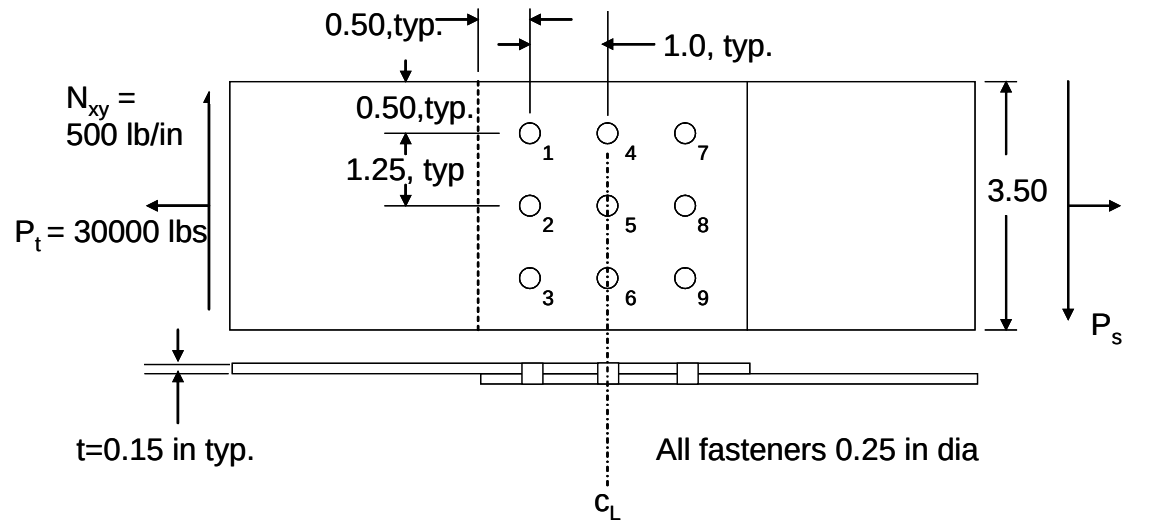

Assume typical 40/20/40 axial distribution[11]: $P_{1T}=P_{2T}=P_{3T}=P_{7T}=P_{8T}=P_{9T}$ = 4000 lb. $P_{4T}=P_{5T}=P_{6T}$ = 2000 lb.

P_{1S} –> P_{9S} = [500(3.5)]/9 = 194 lb

Resultant Fastener loads: $P_1=P_2=P_3=P_7=P_8=P_9 = (4000^2+194^2)^{1/2}$ = 4004 lbs

$P_4=P_5=P_6 = (2000^2+194^2)^{1/2}$ = 2010 lbs

Aluminum 7475T61 Sheet F_{tu}=75000 psi, F_{su}=45000 psi, F_{bru}(e/D=2.0) = 154000 psi

Fasteners: HL18 Pin, HL70 Collar, 95 ksi Shear Fasteners $P_{shear\text{-}allow}$=4660 lb

Joint Strength in 0.15 in sheet $P_{joint\text{-}allow}$=4339 lb (Interpolated from Table 8.1.5.2(n), Reference 5-4).

Multiple row joint K_{ftg} = 1.0

Calculate Allowable Bearing Stress	$F_{bru\text{-}allow}$ = (0.82)154000psi	$F_{bru\text{-}allow}$ = 126280 psi
Calculate the allowable bolt load based on Minimum of (bearing stress, joint)	$P_{br\text{-}ult}=F_{bru\text{-}allow}$ D t = 126280(0.250)(0.15)=4736 lbs	$P_{br\text{-}ult}$= 4736 lbs $P_{joint\text{-}allow}$=4339 lb
Calculate the Bearing Margin	M.S. (brg) = $P_{brg\text{-}ult}/(K_{ftg}\ P_{ti})$- 1= (4736)/[1.0(4004)]-1 = 0.18	**M.S. (joint) = <u>0.18</u>** <u>Elastic Distribution</u>
Calculate Joint Margin	M.S. (joint) = $P_{joint\text{-}allow}/(K_{ftg}\ P_{bolt\text{-}ultimate})$- 1= 4339/ [1.0(4004)] -1	**M.S. (joint) = <u>0.08</u>** <u>Elastic Distribution</u>
Calculate ligament Equation 5.2.3-9	L_{shear}=(e-D/2)+0.234(D/2) = (0.50-0.125)+0.234(0.125)	L_{shear}=0.404 in.

[11] Elastic spring models of 3 fastener axial joints indicate there is peaking on first and last row.

Copyright 2017 Lockheed Martin Corporation.
Note: The current version is always the version on the Lockheed Martin network.

Calculate Shear Tear-out Allowable load	$P_{tearout}=2F_{su}L_{shear}t$ =2(45000)(0.404)(0.15)	$P_{tearout}$= 5454 lbs
Calculate Shear Tear-out Margin of Safety	M.S. (tear-out) = 5454/[1.0(4000)]-1	**M.S. (tear-out) = <u>0.36</u>**

Calculate Net Section Efficiency Equations 5.2.3-13 thru 5.2.3-19	R_{large} = 0.25(0.15) = 0.0375 $\Sigma R_{1:all}$= 3(0.0375) = 0.1125 $\Sigma R_{1:5D}$= 3(0.0375) = 0.1125 (projections of 4,5,6 are identical to 1,2,3)	R_{large} = 0.0375 $\Sigma R_{1:all}$= 0.1125 $\Sigma R_{1:5D}$ = 0.1125
	D_{large} = 0.0375/0.15 = 0.25 in $R_{area} = \Sigma R_{1:5D} - s_{row}/(5D_{large})\bullet$ $[\Sigma R_{1:5D} - \Sigma R_{1:all}]$ = 0.1125-1.0/[5(0.25)][0.1125-0.1125] R_e = 0.1125 A_g = wt = 3.5(0.15) = 0.525in^2	D_{large} = 0.25 in R_{area} = 0.1125 A_g = 0.525in^2
	η = Min [1- R_{area}/A_g, $\{1-(R_{area}/A_g)^2\}\{0.88-(0.18R_{large})/\Sigma R_{1:5D}\}$] η =Min[1-0.1125/0.525, $\{1-(0.1125/0.525)^2\}\{0.88-(0.18)(0.0375)/0.1125\}$] η =Min[(0.786, 0.782]	η = 0.782
Calculate net section tension allowable load	$P_{net\text{-}tension}= F_{tu}\,\eta\,A_g$ = 75000(0.782)(0.525)	$P_{net\text{-}tension}$ = 30791 lbs
Calculate shear allowable load	$P_{net\text{-}shear}= F_{su}\,\eta\,A_g$ = 45000(0.782)(0.525)	$P_{net\text{-}shear}$ = 18475 lbs
Calculate Stress Ratios	$R_t= (K_{ftg}\,P_t)/(P_{net\text{-}tension})$ = 1.0(30000)/30791 $R_s=(K_{ftg}\,N_{xy}\,w)/(P_{net\text{-}shear})$ = 1.0(500)(3.5)/18475	R_t=0.97 R_s=0.09
Calculate Net Section Margin of Safety (Kftg=1.15)	M.S. (Net Section) = $1/(R_s^2+R_t^2)^{1/2}$ -1 = $1/(0.09^2+0.97^2)^{1/2}$-1	**M.S. (Net Section) = <u>0.03</u>**
Calculate Fastener Margin - Shear head fastener thus joint margin is more critical.	M.S. (fast. shear) = $P_{ALLOW\text{-}shear}/(K_{ftg}P_{bolt\text{-}ult})$- 1= 4660/ [1.0(4004)] -1	**M.S. (fast. shear) = <u>0.16</u>**

The net section margin is very low and is less than the joint or bearing margins. This is not desirable since this type of failure is catastrophic with no opportunity for redistribution. Increasing the thickness of the joint would eliminate this issue. Note also that the plate thickness has exceeded half the bolt diameter thus shear tear-out is not critical.

The next example is the same problem, but with a staggered fastener row. Since there are fewer fasteners the margins would go down, however, this is being used for illustration of the method for calculating the efficiency factor and, thus, only the efficiency will be calculated for comparison to this problem.

Because of the multiple rows of fasteners, this type of joint would not normally have a bolt bending calculation performed. An exception would be if there was a large shim between the two layers.

Copyright 2017 Lockheed Martin Corporation.
Note: The current version is always the version on the Lockheed Martin network.

5.2.3.5.2 Example 2 -Basic Lap Splice, Staggered Pattern

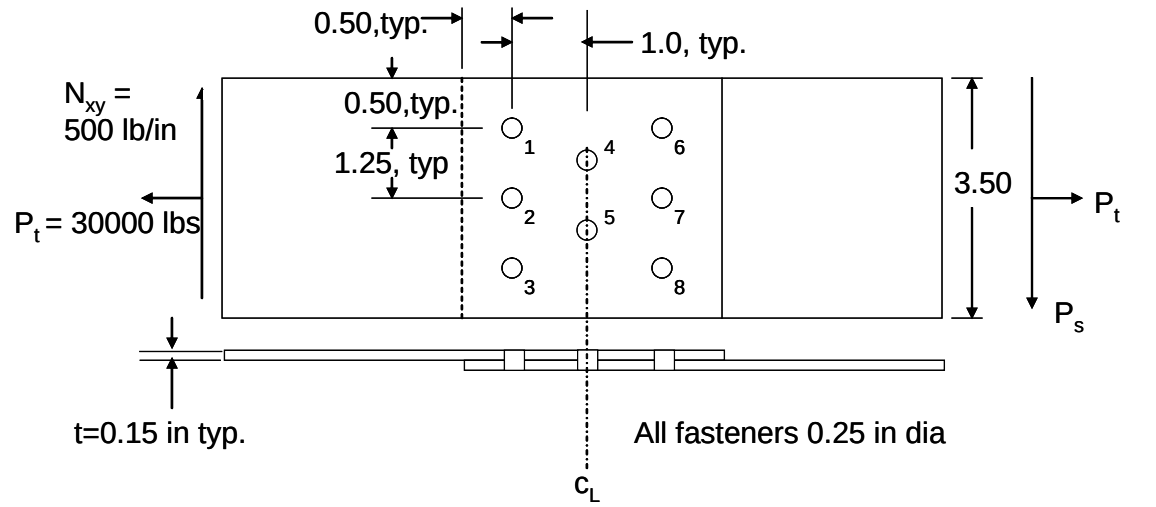

Aluminum 7475T61 Sheet F_{tu}=75000 psi, F_{su}=45000 psi, F_{bru}(e/D=2.0) = 154000 psi
Fasteners: HL18 Pin, HL70 Collar, 95 ksi Shear Fasteners $P_{shear\text{-}allow}$=4660 lb
Joint Strength in 0.15 in sheet $P_{joint\text{-}allow}$=4339 lb (Interpolated from Table 8.1.5.2(n), Reference 5-4

Calculate Net Section Efficiency	R_{large} = 0.25(0.15) = 0.0375 $\Sigma R_{1:all}$= 3(0.0375) = 0.1125 $\Sigma R_{1:5D}$= 3(0.0375) + 2(0.0375) = 0.1875 (projections of 4,5 are added to projections of 1,2,3)	R_{large} = 0.0375 $\Sigma R_{1:all}$= 0.1125 $\Sigma R_{1:5D}$ = 0.1875
Calculate Net Section Efficiency (cont'd)	D_{large} = 0.0375/0.15 = 0.25 in $R_{area} = \Sigma R_{1:5D} - s_{row}/(5D_{large})\bullet [\Sigma R_{1:5D} - \Sigma R_{1:all}]$ = 0.1875-1.0/[5(0.25)(0.1875-0.1125) R_e = 0.1275 A_g = wt = 3.5(0.15) = 0.525in^2	D_{large} = 0.25 in R_{area} = 0.1275 A_g = 0.525in^2
	η = Min [1- R_{area}/A_g, {1-($R_{area}/A_g)^2$}{0.88-(0.18R_{large})/ $\Sigma R_{1:5D}$}] η =Min[1-0.1275/0.525, {1-(0.1275/0.525)^2}{0.88-(0.18)(0.0375)/0.1875}] η =Min[(0.757, 0.794]	η = 0.757

From the first example, η = 0.782. By staggering the fastener pattern, the efficiency drops to 0.757 or about 4% making net section even more critical. A wider spacing on the fasteners might improve the low net section and result in a bearing critical joint.

Copyright 2017 Lockheed Martin Corporation.
Note: The current version is always the version on the Lockheed Martin network.

5.2.3.5.3 Example 3 – Longeron Splice

Assume:

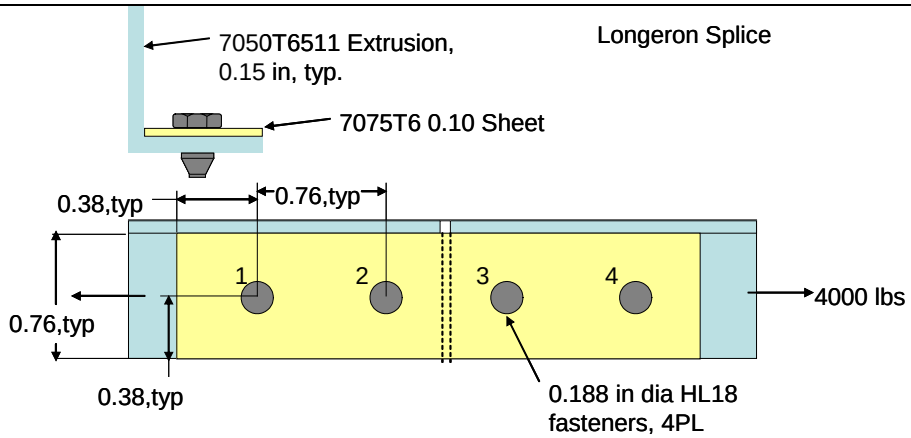

$P_{1T}=P_{2T}=P_{3T}=P_{4T}$ = 4000/2 = 2000 lb.

Resultant Fastener loads: 2000 lb per fastener

Aluminum 7075T6 Sheet F_{tu}=78000 psi, F_{su}=47000 psi, F_{bru}(e/D=2.0) = 156000 psi

7050T6511 Extrusion F_{tu}=79000 psi, F_{su}=42000 psi, F_{bru}(e/D=2.0) = 147000 psi

Fasteners: 0.188 in Dia in 0.190 in dia hole

Hi-Loks 95 ksi Shear – Tension Head Fasteners $P_{shear\text{-}allow}$=2690 lb (Steel)

F_{tu} = 160000 psi; F_{ty}=142000 psi; e_o=0.09 in/in; E=29000000 psi; F_{su} = 95000 psi

Joint Strength in 0.10 in sheet $P_{joint\text{-}allow}$=2473 lb (from Table 8.1.5.2(n), Reference 5-4).

K_{ftg} = 1.15 – single row of fasteners making up splice.

Calculate Allowable Bearing Stress	$F_{bru\text{-}allow}$ = 0.82(156000psi) $F_{bru\text{-}allow}$ = 0.82(147000psi)	$F_{bru\text{-}allow}$ = 127920 psi (Sht) $F_{bru\text{-}allow}$ = 120540 psi (Ext)
Calculate the allowable bolt load based on Minimum of (bearing stress, joint)	$P_{br\text{-}ult}=F_{bru\text{-}allow}$ D t = 127920(0.190)(0.10)=2430 (Sht) 120540(0.19)(0.15)= 3435(Ext)	$P_{br\text{-}ult}$= 2430 lbs (Sht) $P_{br\text{-}ult}$=3435 lbs (Ext) $P_{joint\text{-}allow}$=2473 lb
Calculate Bearing Margin of Safety (Kftg=1.15)	M.S. (Bearing:Sheet) = 2430/[1.15(2000)] -1	**M.S. (Bearing) = <u>0.06</u>** **<u>Sheet</u>**
Calculate ligament	L_{shear}=(e-D/2)+0.234(D/2) = (0.38-0.095)+0.234(0.095)	L_{shear}=0.307 in.
Calculate Shear Tear-out Allowable Load	$P_{tearout}=2F_{su}L_{shear}t$ =2(47000)(0.307)(0.10)	$P_{tearout}$= 2886 lbs
Calculate Shear Tear-out Margin of Safety (Kftg=1.15)	M.S. (tear-out) = 2886/[1.15(2000)] -1	**M.S. (tear-out) = <u>0.25</u>**
Calculate Net Section Efficiency	A_g = wt = 0.76(0.10) = 0.076in^2	A_g = 0.076in^2
	$\eta = 1- \Sigma(D_it)/A_g$ η = 1-[0.188(0.10)]/0.076	η = 0.75
Calculate net section tension allowable load	$P_{net\text{-}tension}=F_{tu}\eta A_g$ = 78000(0.75)(0.076)	$P_{net\text{-}tension}$= 4446 lbs
Calculate net section shear allowable load	$P_{net\text{-}shear}= F_{su}\eta A_g$ = 0 47000(75)(0.076)	$P_{net\text{-}shear}$= 2679 lbs
Calculate Load Ratios	$R_t=K_{ftg}P_t/P_{net\text{-}tension}$ = 1.15(4000)/4446 = 1.03 R_s=0 (no shear applied)	R_t=1.03 R_s=0.0
Calculate Net Section Margin of Safety (Kftg=1.15)	M.S. (Net Section) = $1/(R_s^2+R_t^2)^{1/2}$-1=1/1.03-1	**M.S. (Net Section) = <u>-0.03</u>**
Calculate Fastener Margin based on Minimum of (fastener shear, joint)	M.S. (fast. shear) = $P_{ALLOW\text{-}shear}/(K_{ftg}P_{bolt\text{-}ult})$- 1= 2473/ [1.15(2000)] -1	**M.S. (fast. shear) = <u>0.07</u>**

Copyright 2017 Lockheed Martin Corporation.
Note: The current version is always the version on the Lockheed Martin network.

An increase in thickness would result in a positive margin, but would also increase bearing and joint allowable, leaving net section as the critical margin, a mode which could cause catastrophic failure. If the splice could be slightly wider, the bearing margin would remain the same and would be the critical margin. In this case, both a joint margin and a bearing margin are not required as they would both use the same load distribution, so only margin with the lowest allowable is calculated. The joint margin will be used in lieu of the fastener shear allowable since it is the lower value.

Again, this type of splice would likely not require a bolt bending calculation due to the stabilization of the splice because of the outstanding leg of the longeron. It would prevent the joint from rotating such that the fastener could pick up appreciable bending loads. If however, the splice had a significant shim, bolt bending might be a consideration.

5.2.3.5.4 Example 4 – Bolt Bending With Shear

For the problem below, only bolt bending calculations will be performed. It will be done three ways for comparison purposes. The first set of calculations will assume good clamp-up through properly torqued bolts in a close fit hole with no shim. The second set will assume good clamp-up through properly torqued bolts in a clearance fit hole, again with no shim. The third set of calculations will repeat the first scenario, i.e. good clamp-up through properly torqued bolts in a close fit hole but with a shim.

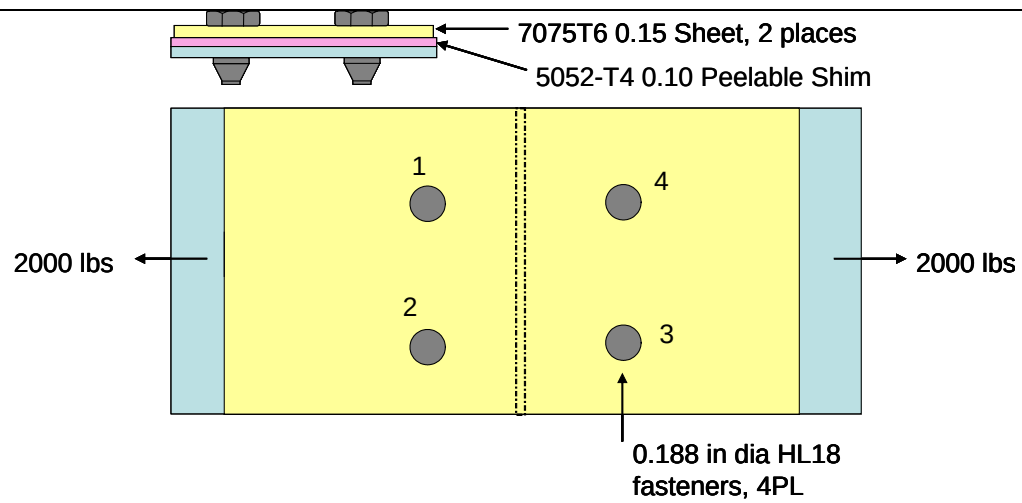

Assume: $P_{1T}=P_{2T}=P_{3T}=P_{4T}$ = 2000/2 = 1000 lb.
Resultant Fastener loads: 1000 lb per fastener
Aluminum 7075T6 Sheet F_{tu}=78000 psi, F_{su}=47000 psi, F_{bru}(e/D=2.0) = 156000 psi. $\alpha=12.0\times10^{-6}$ in/in/°F
Shim is non structural, when present
Fasteners: HL18 0.188-32 ; Head Diameter 0.295-0.315 in α=6.5 E-6 in/in/°F
Hi-Loks Alloy Steel 95 ksi Shear/ 160 ksi tension – Shear Head Fasteners with HL94 Collar
Fasteners installed at 75 °F. Operational ranges are -65 to +215 °F Mil-T-5544 Lubricant Specified

Example A – Torqued bolt, no shim, close fit hole.

Copyright 2017 Lockheed Martin Corporation.
Note: The current version is always the version on the Lockheed Martin network.

Analysis Step	Action	Equations	Results	
1	**Calculate / Obtain Allowables**			
	Bearing ($F_{bru\text{-}allow}$)	$F_{bru\text{-}allow} = F_{bru}\ k_{wpb}$	127920	psi
	Bolt Shear	IDAT/FDB	2690	lb
	Bolt Tension	IDAT/FDB	2500	lb
	Joint	IDAT/FDB	2473	lb
	$P_{ALLOW\text{-}shear}$	$P_{ALLOW\text{-}shear}$=min(Bolt Shear, Joint)	2473	
	Bolt $M_{allow\text{-}head}$	IDAT/FDB	126	in-lb
	Tail $M_{allow\text{-}tail}$	IDAT/FDB	72	in-lb
	M_{allow}	$M_{allow\text{-}head} + M_{allow\text{-}tail}$	198	in-lb
	P_M	Equivalent shear load to generate M_{ALLOW}	2707	lbs
	M	$0.65(P_M^2/(2F_{bru\text{-}ALLOW1}D) + P_M^2/(2F_{bru\text{-}ALLOW2}D)+P_M L_{shim})$	198	in-lb
2	**Calculate Interaction Exponent**			
	K_{Geom}	$K_{Geom} = (Ac)/(2Q) = (3\pi/4)D_{bolt}[D_{bolt}^2-(D_{bolt}-2t)^2] / [D_{bolt}^3-(D_{bolt}-2t)^3]$	2.356	Solid Pin
	Modulus of Rupture, k=2	$(mc/I)_b = F_{tu}+f_o(k-1)$	308368	
	γ	$\gamma=(mc/I)_b/F_{tu}-1$	0.927	
	r_p	$r_p=0.329834K_{Geom}^2-0.74666K_{Geom}+2.029869$	2.10	
	r	$r=1+\gamma(r_p-1)$	2.02	
3	**Joint Stiffness**			
	A	$A=\pi D^2/4$	0.0278	in^2
	L_{se}	$L_{se}=Sum(t_i)+H_{head}/2$	0.325	in
	k_b	$k_b=1/(L_{se}/(AE)+(H_{nut}/2)/(A_{thd}E))$	1.487E+06	
	A_{ci}	$A_{ci}=\pi(D_{head}^2-D^2)/4$	0.0453	in^2
	k_j	$k_j=1/(Sum(t_i/(EA_{ci}))$	1.555E+06	
	n	$n=t_{load}/t_{total}$	0.5	
	φ_n	$\varphi=n(k_b/(k_b+k_j))$	0.2444	
4	**Bolt Preload and Joint Opening Load**	This problem ignores any fastener preload effects due to thermal		
	$T_{nom\text{-}lock}$	$T_{nom\text{-}lock} = 225D^{2.33}$	4.58	in-lbs
	T_r	$T_r=T-T_{nom\text{-}lock}$	25.42	in-lbs
	$P_{bi\text{-}nom}$	$P_{bi\text{-}nom}=T_r/K_{nut}$	1439	lbs
	ΔP_{bi}	$\Delta P_{bi}=(0.08+0.20)P_{bi}$	403	
	$P_{bi\text{-}max}$	$P_{bi\text{-}max}=P_{bi\text{-}nom}(1+u)$	1813	lbs

Copyright 2017 Lockheed Martin Corporation.
Note: The current version is always the version on the Lockheed Martin network.

	$P_{bi\text{-}min}$	$P_{bi\text{-}min}=P_{bi\text{-}nom}(1-u)-\Delta P_{bi}$	662	lbs
	P_{open}	$P_{open}=P_{bi\text{-}min}/(1-\varphi_n)$	876	lbs

5	**Bolt Applied Loads**			
	t_{brg1}	$t_{brg1}=P_{bolt}/(F_{bru\text{-}allow}D)$	0.042	in
	t_{brg2}	$t_{brg2}=P_{bolt}/(F_{bru\text{-}allow}D)$	0.042	in
	Gap (L_{shim})	given	0.000	in
	L_{arm}	$L_{arm}=t_{brg1}/2+L_{shim}+t_{brg2}/2$	0.042	in
	m	$m=0.65P_{bolt}L_{arm}$	27	in-lbs
	$P_{t\text{-}moment}$	$P_{t\text{-}moment} = 2m/(0.75(D_{head}+D_{nut}))$	115	lbs
6	**Bolt Total Tension Loads**			
	ΔP_{bolt}	$\Delta P_{bolt}=\varphi_n(P_{tension}+P_{t\text{-}moment})$	28	lbs
	$P_{bolt\text{-}tension}$	$P_{bolt\text{-}tension} = P_{bi\text{-}max}+\Delta P_{bolt}$	1842	lbs
		$P_{tension} + P_{t\text{-}moment}$	115	
		Is $P_{open}>P_{tension}+P_{t\text{-}moment}$	yes	Specification torque is sufficient
7	**Calculate Load Ratios**			
	R_s	$R_s=K_{ftg}P_{bolt}/P_{ALLOW\text{-}shear}$	0.40	
	R_t	$R_t=(K_{ftg}P_{bolt\text{-}tension})/P_{ALLOW\text{-}tension}$	0.74	Tension Only - Predominately Due to Preload
	R_t	$R_t=(K_{ftg}P_{tension})/P_{ALLOW\text{-}tension}$	0.05	Tension Interaction: No Preload
	R_b	$R_b=(K_{ftg}P_{bolt\text{-}ultimate})/P_{M\text{-}ALLOW}$	0.37	
8	**Calculate Margins**			
	Fastener Shear/Joint	$MS=P_{ALLOW\text{-}shear}/(K_{ftg}P_{bolt})-1$	**1.47**	
	Fastener Shear-Tension	$R_{s\text{-}allow}$ from Figure 5.2.3-15	0.98	
	Fastener Shear-Tension	$MS=R_{s\text{-}allow}/R_s-1 = R_{t\text{-}allow}/R_t-1$	**1.45**	
	Fastener Bending	$MS=1/R_b-1$	**1.71**	
	Fastener Bending-Tension	$R_{b\text{-}allow}$ from Figure 6.3.6-2	0.97	
	Fastener Bending-Tension	$MS=R_{b\text{-}allow}/R_b-1 =R_{t\text{-}allow}/R_t-1$	**1.62**	
	Fastener Tension	$MS=P_{ALLOW\text{-}tension}/(K_{ftg}P_{bolt+pre})-1$		Margin Not Required per guidelines

Copyright 2017 Lockheed Martin Corporation.
Note: The current version is always the version on the Lockheed Martin network.

Example B. Perform same analysis for a torqued bolt, no shim, but a sloppy fit 0.227-0.230 in dia hole 0.041 nominal bolt to hole clearance or c/D% = 21.8

Clearance hole affects only the shear strength of the fastener and the joint strength allowables, so only those calculations will be repeated.

Analysis Step	Action	Equations	Results	
1	**Calculate / Obtain Allowables**			
	Bearing ($F_{bru\text{-}allow}$)	$F_{bru\text{-}allow} = F_{bru}k_{wpb}$	127920	psi
	c/D percent	c/D•100	21.8	
	K_{loose}	$K_{loose} = 1.160066\text{-}0.052751(c/D_{pct}) + 0.002826(c/D_{pct})^2 - 0.000050986(c/D_{pct})^3$	0.82	
	Bolt Shear	IDAT/FDB	2690	lb
	$P_{shear\text{-}loose}$	$P_{shear\text{-}loose} = K_{loose}$•Bolt Shear	2219	
	Bolt Tension	IDAT/FDB	2500	lb
	Joint	IDAT/FDB	2473	lb
	$P_{joint\text{-}loose}$	$P_{joint\text{-}loose} = K_{loose}$•Joint	2040	
	$P_{ALLOW\text{-}shear}$	$P_{ALLOW\text{-}shear} = \min(P_{shear\text{-}loose}, P_{joint\text{-}loose})$	2040	
Step 2, 3, 4, 5, and 6 no change				

7	**Calculate Load Ratios**			
	R_s	$R_s=K_{ftg}P_{bolt}/P_{ALLOW\text{-}shear}$	0.49	
	R_t	$R_t=(K_{ftg}P_{tension})/P_{ALLOW\text{-}tension}$	0.05	Tension Interaction: No Preload
8	**Calculate Margins**			
	Fastener Shear/Joint	$MS=P_{ALLOW\text{-}shear}/(K_{ftg}P_{bolt})\text{-}1$	**1.04**	
	Fastener Shear-Tension	$R_{s\text{-}allow}$ from Figure 5.2.3-15	0.99	
	Fastener Shear-Tension	$MS=R_{s\text{-}allow}/R_s\text{-}1 = R_{t\text{-}allow}/R_t\text{-}1$	**1.02**	
All other margins remain unchanged.				

Example C. Perform same analysis for a torqued bolt, 0.10 shim, with a close fit hole

Adding a shim will affect the bending moment generated along with the prying load on the fastener head.

Analysis Step	Action	Equations	Results	
1	**Calculate / Obtain Allowables**			
	Bearing ($F_{bru\text{-}allow}$)	$F_{bru\text{-}allow} = F_{bru}k_{wpb}$	127920	psi
	c/D percent	c/D•100	0.0	
	K_{loose}	$K_{loose} = 1.160066\text{-}0.052751(c/D_{pct}) + 0.002826(c/D_{pct})^2 - 0.000050986(c/D_{pct})^3$	1.16	
	Bolt Shear	IDAT/FDB	2690	lb

Copyright 2017 Lockheed Martin Corporation.
Note: The current version is always the version on the Lockheed Martin network.

	$P_{shear-loose}$	$P_{shear-loose} = K_{loose}$•Bolt Shear	2690	
	Bolt Tension	IDAT/FDB	2500	lb
	Joint	IDAT/FDB	2473	lb
	$P_{joint-loose}$	$P_{joint-loose} = K_{loose}$•Joint	2473	
	$P_{ALLOW-shear}$	$P_{ALLOW-shear} = \min(P_{shear-loose}, P_{joint-loose})$	2473	
	Bolt $M_{allow-head}$	IDAT/FDB	126	in-lb
	Tail $M_{allow-tail}$	IDAT/FDB	72	in-lb
	M_{allow}	$M_{allow-head} + M_{allow-tail}$	198	in-lb
	P_M	Equivalent shear load to generate M_{ALLOW}	1759	lbs
	$M_{ALLOW'}$	$0.65(P_M^2/(2F_{bru-ALLOW1}D) + P_M^2/(2F_{bru-ALLOW2}D)+P_M L_{shim})$	198	in
2	**Calculate Interaction Exponent**	Unchanged		
3	**Joint Stiffness**			
	A	$A=\pi D^2/4$	0.0278	in^2
	L_{se}	$L_{se}=Sum(t_i)+H_{head}/2$	0.425	in
	k_b	$k_b=1/(L_{se}/(AE)+(H_{nut}/2)/(A_{thd}E))$	1.255E+06	
	A_{ci}	$A_{ci}=\pi(D_{head}^2-D^2)/4$	0.0453	in^2
	k_j	$k_j=1/(Sum(t_i/(EA_{ci}))$	1.167E+06	
	n	$n=t_{load}/t_{total}$	0.625	
	φ_n	$\varphi=n(k_b/(k_b+k_j))$	0.0.3239	
4	**Bolt Preload and Joint Opening Load**	Unchanged		
5	**Bolt Applied Loads**			
	t_{brg1}	$t_{brg1}=P_{bolt}/(F_{bru-allow}D)$	0.042	in
	t_{brg2}	$t_{brg2}=P_{bolt}/(F_{bru-allow}D)$	0.042	in
	Gap (L_{shim})	given	0.100	in
	L_{arm}	$L_{arm}=t_{brg1}/2+L_{shim}+t_{brg2}/2$	0.142	in
	m	$m=0.65P_{bolt}L_{arm}$	92	in-lbs
	$P_{t-moment}$	$P_{t-moment} = 2m/(0.75(D_{head}+D_{nut}))$	393	lbs
6	**Bolt Total Tension Loads**			
	ΔP_{bolt}	$\Delta P_{bolt}=\varphi_n(P_{tension}+P_{t-moment})$	127	lbs
	$P_{bolt-tension}$	$P_{bolt-tension} = P_{bi-max}+\Delta P_{bolt}$	1940	lbs
		$P_{tension} + P_{t-moment}$	393	
		Is $P_{open}>P_{tension}+P_{t-moment}$	yes	Specification torque is sufficient
7	**Calculate Load Ratios**			
	R_s	$R_s=K_{ftg}P_{bolt}/P_{ALLOW-shear}$	0.40	

Copyright 2017 Lockheed Martin Corporation.
Note: The current version is always the version on the Lockheed Martin network.

	R_t	$R_t=(K_{ftg}P_{bolt\text{-}tension})/P_{ALLOW\text{-}tension}$	0.78	Tension Only - Predominately Due to Preload
	R_t	$R_t=(K_{ftg}P_{tension})/P_{ALLOW\text{-}tension}$	0.16	Tension Interaction: No Preload
	R_b	$R_b=(K_{ftg}P_{bolt\text{-}ultimate})/P_{M\text{-}ALLOW}$	0.57	
8	**Calculate Margins**			
	Fastener Shear/Joint	$MS=P_{ALLOW\text{-}shear}/(K_{ftg}P_{bolt})-1$	**1.47**	
	Fastener Shear-Tension	$R_{s\text{-}allow}$ from Figure 5.2.3-15	0.95	
	Fastener Shear-Tension	$MS=R_{s\text{-}allow}/R_s-1 = R_{t\text{-}allow}/R_t-1$	**1.38**	
	Fastener Bending	$MS=1/R_b-1$	**0.76**	
	Fastener Bending-Tension	$R_{b\text{-}allow}$ from Figure 6.3.6-2	0.93	
	Fastener Bending-Tension	$MS=R_{b\text{-}allow}/R_b-1 =R_{t\text{-}allow}/R_t-1$	**0.63**	

Summary of Results			
Failure Mode	Baseline, Close fit holes, No Shim	Loose fit holes, no shim	Close fit holes, 0.10 in thick non-structural shim
1 Fastener Shear/Joint Margin	1.47	1.04	1.47
2) Fastener Shear –Tension Interaction	1.45	1.02	1.38
3) Fastener Bending	1.71	1.71	0.76
4) Fastener Bending-Tension interaction	1.62	1.62	0.63
5) Fastener Tension (Include preload)	NA	NA	NA

From this example it can be seen that either oversized holes or large non-structural shims can degrade the integrity of a joint by decreasing fastener shear capability or increasing bolt bending. In many applications like this, an aluminum collar might be specified. The bending and tension capability of the fastening system is greatly degraded due to the aluminum collar. If any eccentricity which causes bending is present, tension head fasteners with tension type steel collars should be used. Generally the maximum thickness for a non-structural shim in this application would be 15% of the bolt diameter or 0.03 for the 0.188 in diameter bolt used. Beyond that, an analysis is advised.

Also note that although the bending moment allowable is the same for all three examples, the resulting allowable load, P_M, is not. This is because of the difference in joint geometry. In Examples A and B, P_M = 2707 lbs while in Example C P_M=1759 lbs due to the presence of the shim.

Copyright 2017 Lockheed Martin Corporation.
Note: The current version is always the version on the Lockheed Martin network.

5.2.3.5.5 Example 5 – Bolt Bending With Shear and Tension

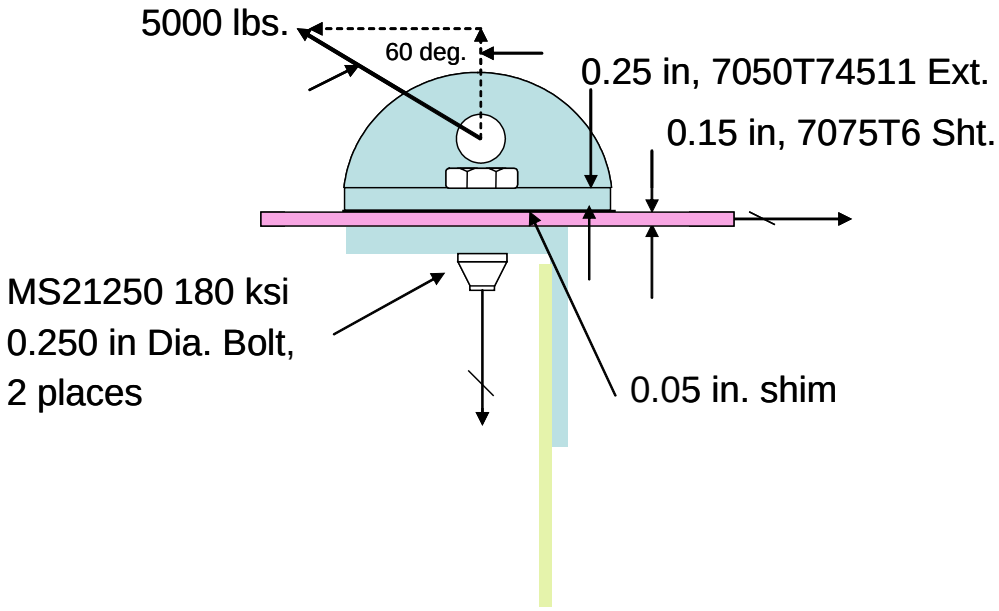

Bolt loads: $P_{bolt\text{-}hzl}$ = (5000/2)sin(60°) = 2165 lb / bolt
$P_{bolt\text{-}vert}$ = (5000/2)cos(60°) = 1250 lb / bolt
Aluminum 7075T6 Sheet F_{tu}=78000 psi, F_{su}=47000 psi, F_{bru}(e/D=2.0) = 156000 psi
Aluminum 7050T74511 Extrusion F_{tu}=68000 psi, F_{su}=40000 psi, F_{bru}(e/D=2.0) = 130000 psi
Shim is non structural α=12.0E-6 in/in/°F
Fasteners: 0.250 in Dia-28 MS21250 180 ksi Tension, Mil-S-8879 Threads; NAS1804 Self Locking Nut.
Torque 90-110 in-lb. Mil-T-5544 Lubricant Specified.
$P_{ALLOW\text{-}shear}$=5300 lb $P_{ALLOW\text{-}tension}$=6980 lb (Reference – Fastener Specification)
Fitting Factor 1.15
Fasteners installed at 75 °F. Operational ranges are -65 to +215 °F

Calculate Allowable Bearing Stress	$F_{bru\text{-}allow}$ =0.82(156000psi) (Sht) $F_{bru\text{-}allow}$ = 0.82(130000psi) (Ext)	$F_{bru\text{-}allow}$ = 127920 psi (Sht) $F_{bru\text{-}allow}$ = 106600 psi (Ext)
Calculate Bolt Constants, Joint Stiffness, and Margin of Safety Parameters (Reference Section 5.2.3.4)		

Calculate K_{Geom} Note: t = D_{bolt}/2 since solid pin	K_{Geom}=(Ac)/2Q = (3π/4)D_{bolt}[D_{bolt}^2-(D_{bolt} -2t)^2] / [D_{bolt}^3-(D_{bolt} -2t)^3] =(3π/4)(0.25)[0.25^2-(0.25-2•0.125)^2] / [0.25^3-(0.25-2•0.125)^3] = 2.356	K_{Geom}= 2.356
Obtain γ Table 6.3.2-1; Section 6.3	γ = .935	γ = .935
Calculate r_p, r	r_p = 0.329834(K_{Geom})^2 –0.74666K_{Geom}+2.029869 = 0.329834(2.356)^2 – 0.74666(2.356)+2.029869 = 2.101 r = 1+γ(r_p-1) = 1+.935(2.10-1) = 2.03	r_p =2.10 r = 2.03 Use r = 2.0 interaction exponent

Copyright 2017 Lockheed Martin Corporation.
Note: The current version is always the version on the Lockheed Martin network.

Determine/Calculate Bolt Allowables		
MS21250 180 ksi Tension, Mil-S-8879 Threads; NAS1804 Self Locking Nut. 0.250 in Dia-28 H_{head}=0.300 in H_{nut}=0.250 in	Specification Torque 120-140 in-lb. Mil-T-5544 Lubricant Specified. $P_{ALLOW\text{-}shear}$=5300 lb $P_{ALLOW\text{-}tension}$=6980 lb (Reference – Fastener Specification) F_{tu} = 180000 psi; F_{ty}=163000 psi; e_o=0.06 in/in; E=29000000 psi; F_{su} = 108000 psi	$P_{ALLOW\text{-}shear}$= 5300 lb $P_{ALLOW\text{-}tension}$= 6980 lb
M_{allow} IDAT/FDB	$M_{allow\text{-}head}$=451 in-lb $M_{allow\text{-}tail}$=266 in-lb M_{allow}= $M_{allow\text{-}head}$ + $M_{allow\text{-}tail}$ = 451+266 = 717 in-lbs	M_{allow} = 717 in-lb
Determine P_M, the equivalent shear load which results in M_{allow}	$M=0.65[P_M^2/(2F_{bru1}D) + P_M^2/(2F_{bru2}D) + P_M L_{shim}]$ Iterate on P_m until $M=M_{allow}$ $717=0.65[P_M^2/(2\bullet127920\bullet0.25) + P_M^2/(2\bullet106600\bullet0.25) + P_M\bullet0.05]$ By trial and error P_M=4983 lbs	P_M=4983 lbs
Calculate Bolt Applied Loads/Moments (Reference Section 5.2.3.4)		
Calculate effective thickness and L_{arm} (bolt is torqued in a close fit hole)	$t_{brg1}= P_{bolt\text{-}ult}/(F_{bru\text{-}allow}D)=$ 2165/(127920•0.250) = 0.0677 (Sht) $t_{brg2}= P_{bolt\text{-}ult}/(F_{bru\text{-}allow}D)=$ 2165/(106600•0.250) = 0.0812 (Ext) $L_{arm}=t_{brg1}/2+L_{shim}+t_{brg2}/2$ =0.0677/2+0.05+0.0812/2 = 0.1245	L_{arm}= 0.1245 in
Calculate the bending moment	$m=0.65P_{bolt\text{-}ult}L_{arm}$ = 0.65(2165)(0.1245)	m= 175 in-lbs bolt, torqued, close fit hole
Calculate prying load $P_{t\text{-}moment}$	$P_{t\text{-}moment}$ = 2m/[0.75(D_{head}+D_{nut})] =2(175)/[0.75(0.433+0.434)] = 539 lbs	$P_{t\text{-}moment}$ =539 lbs
Calculate Bolt Preload and Joint Opening Load (Reference Section 5.2.3.1.3)		
Calculate T_r	$T_{nom\text{-}lock}$ = $225(0.25)^{2.33}$= 8.899 in-lbs (lubricated) T_r=T-$T_{nom\text{-}lock}$ = 100-8.899 = 91.10 in-lb	T_r = 91.1 in-lb
Calculate nominal preload	K_{nut} = 0.022521 (Table 5.2.3-3 Mil-T-5544 Lubricant) $P_{bi\text{-}nom}$=T_r/K_{nut}= 91.1/0.022521 (Equation 5.2.3-1)	$P_{bi\text{-}nom}$ = 4045 lbs
Nominal Preload is 64% of fastener yield (6300 lbs) – must calculate separate tension margin including preload.		
Calculate joint stiffness N=0.50 load is applied at midplane of layers	$A = \pi D_{bolt}^2/4 = \pi(0.25)^2/4 = 0.0491$ in^2 A_{thd} = 0.03877 in^2 $L_{se} = \Sigma t_i+H_{head}/2$ = 0.25+0.05+0.15+0.300/2 = 0.600 in H_n = 0.25 (from nut spec) $k_b=1/[L_{se}/AE+(H_n/2)/A_rE]$ = 1/[0.600/ (0.0491•29E6) + (0.25/2)/(0.03877•29E6)] = 1.87774E6 $A_{ci}= \pi/4(D_{head}^2-D^2) = \pi/4(0.433^2-0.25^2)$ = 0.0982 in^2 $k_j=1 / [\Sigma t_i/E_iA_{ci}]$ = 1/ [0.25/(10.3E6•0.0982) + 0.05/(10.3E6•0.0982) +0.15/(10.3E6•0.0982)] = 2.2477E6 n=tload/ttotal=(0.25/2+0.05+0.15/2)/(0.25+0.05+0.15) = 0.556 $\varphi_n =n\varphi =nk_b/(k_b+k_j)$ 0.556(1.87774E6/(1.87774E6+2.2477E6)) = 0.253	φ_n = 0.228

Copyright 2017 Lockheed Martin Corporation.
Note: The current version is always the version on the Lockheed Martin network.

Calculate $P_{thermal}$	$L_{shank} = (0.25+0.15+0.05) = 0.45$ $P^{neg}_{thermal} = (T_{op}-T_{instl})[(\alpha_{j1}t_{j1}+\alpha_{j1}t_{j2}+\alpha_{ji}t_{ji}) - \alpha_b L_{shank}](\varphi_n k_j)$ $=(-65-75)[12.0x10^{-6}\bullet0.25+12.0x10^{-6}\bullet0.15+ 12.0x10^{-6}\bullet0.05-6.5x10^{-6}\bullet0.45](0.253\bullet2.2477x10^{6}) = -198$ lbs $P^{pos}_{thermal} = (T_{op}-T_{instl})[(\alpha_{j1}t_{j1}+\alpha_{j1}t_{j2}+\alpha_{ji}t_{ji}) - \alpha_b L_{shank}](\varphi_n k_j)$ $=(215-75)[12.0x10^{-6}\bullet0.25+12.0x10^{-6}\bullet0.15+ 12.0x10^{-6}\bullet0.05-6.5x10^{-6}\bullet0.45](0.253\bullet2.2477x10^{6}) = 198$ lbs	$P_{thermal}$ = +/-198 lbs
Calculate ΔP_{bi}	$\Delta P_{bi}=(0.08+0.20)P_{bi}$ $=0.28(4045) = 1133$ lbs	ΔP_{bi} = 1133 lbs

$P_{bi\text{-}minimum}$, $P_{bi\text{-}maximum}$	u=0.26 Equation 5.5.1-4, lubricated $P_{bi\text{-}minimum} = (1-u)P_{bi\text{-}nominal} – \Delta P_{bi} + P^{neg}_{thermal}$ $=(1-0.26)(4041)– 1133 – 198 = 1659$ lbs $P_{bi\text{-}maximum}=(1+u)P_{bi\text{-}nominal} + P^{pos}_{thermal}$ $=(1+0.26)(4041) + 198 = 5290$ lbs	$P_{bi\text{-}minimum}$ = 1659 lbs $P_{bi\text{-}maximum}$ = 5290 lbs
Calculate $P_{open\text{-}min}$ Is it greater than ($P_{tension}$ + $P_{t\text{-}moment}$)?	$P_{open} = P_{bi\text{-}minimum}/(1-\varphi_n) = 1659/(1-0.253)$ $= 2221$ lbs	P_{open} = 2221 lbs
Calculate ΔP_{bolt}	$\Delta P_{bolt}= \varphi_n (P_{tension} + P_{t\text{-}moment}) = 0.253(1250+539) = 453$ lbs	$\Delta P_{bol\ t}$= 453 lbs
Calculate $P_{bolt\text{-}tension}$	$P_{bolt\text{-}tension} = P_{bi\text{-}maximum}+\Delta P_{bolt}$ $= 5290 + 453 = 5743$ lbs	$P_{bolt\text{-}tension}$ = 5743 lbs
P_{open} ?>? ($P_{tension}$+$P_{t\text{-}moment}$)		
Check if Preload is Sufficient	P_{open} ?>? ($P_{tension}$+$P_{t\text{-}moment}$) 2221 lbs > 1789 lbs	Specification torque is sufficient. Calculate Margins
The following plot shows the tension loading in the fastener for both minimum and maximum preload calculated above.		

Copyright 2017 Lockheed Martin Corporation.
Note: The current version is always the version on the Lockheed Martin network.

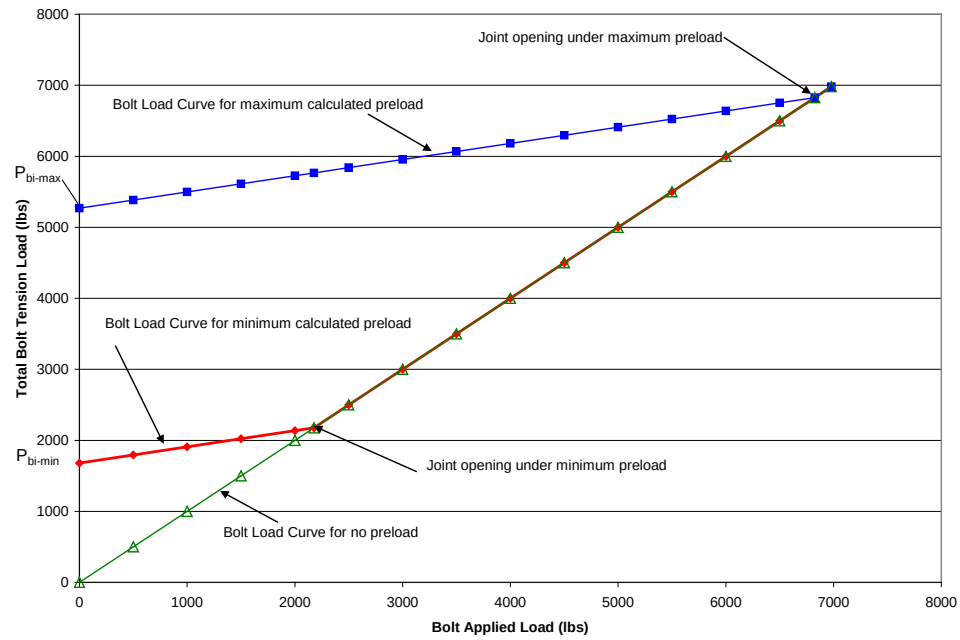

Calculate Bending/Tension Margin at Fastener Head and Shear Tension Margin at Fastener Shear Plane		
Calculate Load Ratios	$R_b=K_{ftg}P_{bolt\text{-}hzl}/P_M$ = 1.15(2165)/4983 lbs = 0.50 $R_t=K_{ftg}P_{bolt\text{-}tension}/P_{ALLOW\text{-}tension}$ = 1.15(1789)/6980 = 0.29 $R_s=K_{ftg}P_{bolt\text{-}ult}/P_{ALLOW\text{-}shear}$ = 1.15(2165)/5300 = 0.47	R_b= 0.50 R_t= 0.29 R_s= 0.47
Check 1) Fastener Shear	M.S. = $P_{ALLOW\text{-}shear}$ /(K_{ftg} $P_{bolt\text{-}ult}$)-1 = 5300/[1.15(2165)]-1	<u>M.S. = 1.13</u> Fastener Shear
1a) Fastener Joint Margin	Not required fastener is solid, protruding tension head fastener.	<u>NA</u>
2) Fastener Shear – Tension Interaction (Do not use preload with tension calculation)	For R_s = 0.47 and R_t= 0.29 From Figure 5.2.3-18 $R_{s\text{-}allow}$ = 0.8867 M.S. = 0.8867/0.47-1	<u>M.S. = 0.89</u> Fastener Shear-Tension Interaction
3) Fastener Bending	R_b = 0.50 M.S. = 1/R_b-1 = 1/0.50-1	<u>M.S. = 1.00</u> Fastener Bending
4) Fastener Bending-Tension interaction (Do not use preload with tension calculation)	R_b = 0.50, R_t=0.29, then from Figure 6.3.6-2 $R_{b\text{-}allow}$ = 0.7897 M.S. = 0.7897/0.50-1	<u>M.S. = 0.58</u> Fastener Bending-Tension Interaction
5) Fastener Tension Maximum of (bolt load or preload + factored bolt load)	$P_{bolt\text{-}tension}$=Max(1789,5743)=5743 MS=$P_{allow\text{-}tension}$/($K_{ftg}P_{bolt\text{-}tension}$)-1 MS=6980/[1.15(5743)]-1=0.06	<u>M.S. =0.06</u> Fastener Tension

Copyright 2017 Lockheed Martin Corporation.
Note: The current version is always the version on the Lockheed Martin network.

5.2.4 Joint Flexibility

Refer to Program-specific and customer-generated guidance and/or the LM Stress Memo Manual SM65d, Reference 5-1 and the GD Structural Analysis Manual, Section 14.11, Reference 5-2. The program IDAT has a routine called SS_JOINT which calculates fastener stiffness based on a beam on an elastic foundation approach for use in some of the bolted joint analysis programs. Other fastener stiffness methods are described in SMN389 (Reference 5-8) and FAS92 (Reference 5-9)

5.2.5 Bushings

There are two types of analysis involved when press fit bushings are used: analysis of the structure for the forces due to the press fit installation and the analysis of the bushing. Bushings should be of equivalent strength or stronger than the material in which they are installed. So for example, while an aluminum bushing could be used in an aluminum application, it would not generally be used in a titanium or steel application. Also when mixing metals in a bushing installation, galvanic corrosion concerns need to be addressed and appropriate surface preparation specified. The following materials are recommended for use as bushings in lugs: Aluminum-Nickel-Bronze, Manganese Bronze, and Nitronic 60 and PH13-8Mo. Other materials may also be acceptable; however, copper beryllium bushings are no longer to be used because beryllium is a hazardous material and can cause downstream health issues.

Bushings are subject to the same analysis factors as the parent joint. For instance, if a bushing is used in a lug or clevis, the fitting factors of Section 5.4 apply. If the bushing is used in a typical aircraft joint for a repair, the fitting factors of Section 5.2.3 apply. Additionally if the program has a specific yield criterion, *e.g.*, “No yield at 1.15xLimit Load”, then this would also apply to the bushing.

For interference fit bushings, each layer should be bushed independently; otherwise the bushing also acts as a hollow pin and may fail unexpectedly. In general, the fastener should be concentric with the walls of the bushing to limit bushing spin or breakout of the hole during final sizing if drilled after installation or collapse of the bushing during installation if drilled prior to installation. Although each aircraft program has program approved bushing interference requirements, in general, the bushing should be on the order of 0.0005 to 0.0015 inch larger in diameter than the maximum hole size so that at minimum material condition for the bushing, there is approximately 0.0005 inch interference. These values may vary with bushing size. The analyst should follow specific program guidance for their application.

A finite element study was undertaken to investigate the stresses that were developed in bushings to determine the appropriate yield criteria and it was found that the optimum bushing wall thickness is a function of the outer diameter of the bushing.

The optimum recommended wall thickness for any bushing is 12% of the bushing outer diameter or a minimum of 0.030 in. This rule applies independent of material.

5.2.5.1 Interference-Fit Bushing Stress

In general, this calculation is not used if the interference levels meets the recommendations of Figure 3.4.7-7 and the wall thickness of the bushing meets the recommendations above. For high degrees of interference or very thin walled bushings, the stresses on the bushing may be required to check that the bushing does not yield. Per program policy or for a very high degree of interference in short transverse or long transverse grain direction, the stresses in the structure may be required to check for stress corrosion cracking.

Per Reference 5-2, the stresses resulting from an interference-fit bushing can be calculated from an examination of the radial displacements. In the equations presented below, the maximum bushing diameter and the minimum hole diameter should be used for the calculations. Also required is the outer diameter of the lug. In the event that the bushing is not installed in a lug, but in a skin or cap, it is conservative in the calculation of installation stresses in the

Copyright 2017 Lockheed Martin Corporation.
Note: The current version is always the version on the Lockheed Martin network.

plate to assume the lug is a ring with an outer radius based on a 1D end distance as shown in Figure 5.2.5-1. Note that the stress on the bushing is higher with a larger wall thickness of the lug/plate.

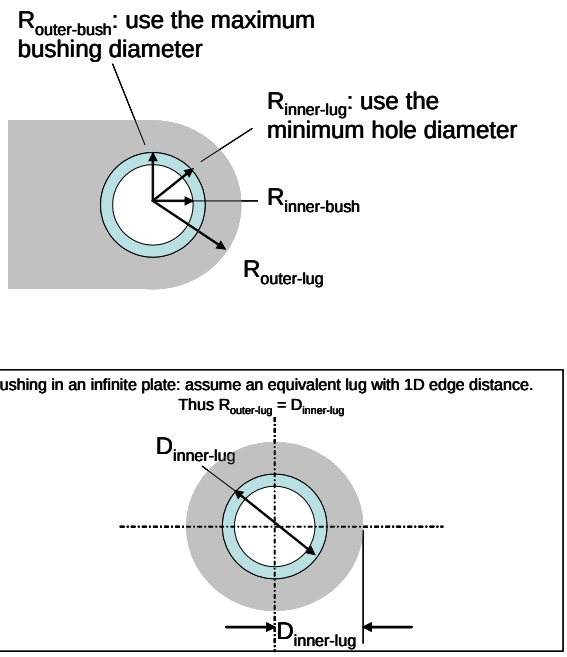

Figure 5.2.5-1 Bushing/Lug Geometry

The maximum radial interference is given by

$$\delta = R_{outer\text{-}bush} - R_{inner\text{-}lug} \qquad \textbf{Equation 5.2.5-1}$$

where
$R_{outer\text{-}bush}$ is the maximum outer radius of the bushing (in)
$R_{inner\text{-}lug}$ is the minimum inner radius of the lug (in)

The pressure due to the interference fit bushing on the inner surface of the hole is given by

$$p = \frac{\delta}{\frac{R_{inner-lug}}{E_{lug}}\left[\frac{\left(R_{outer-lug}^2 + R_{inner-lug}^2\right)}{\left(R_{outer-lug}^2 - R_{inner-lug}^2\right)} + \mu_{lug}\right] + \frac{R_{outer-bush}}{E_{bush}}\left[\frac{\left(R_{outer-bush}^2 + R_{inner-bush}^2\right)}{\left(R_{outer-bush}^2 - R_{inner-bush}^2\right)} - \mu_{bush}\right]} \qquad \textbf{Equation 5.2.5-2}$$

where
δ is the difference between the outer radius of the bushing and the inner radius of the lug, given by Equation 5.2.5-1 (in)
$R_{outer\text{-}lug}$, $R_{outer\text{-}bush}$ are the outer radii of the lug and bushing, respectively (in)
$R_{inner\text{-}lug}$, $R_{inner\text{-}bush}$ are the inner radii of the lug and bushing, respectively (in)
μ_{lug}, μ_{bush} are the poisson's ratio of the lug and bushing, respectively (in)
E_{lug}, E_{bush} are the Modulus of Elasticity of the lug and bushing, respectively (psi)

The maximum radial and tangential stresses (positive stress indicates tension) for the lug subject to a uniform internal pressure occur at the inner surface and are given by

$$\sigma_{rad} = -p \qquad \textbf{Equation 5.2.5-3}$$

$$\sigma_{tan} = p[(R_{outer\text{-}lug}^2 + R_{inner\text{-}lug}^2) / (R_{outer\text{-}lug}^2 - R_{inner\text{-}lug}^2)] \qquad \textbf{Equation 5.2.5-4}$$

where

Copyright 2017 Lockheed Martin Corporation.
Note: The current version is always the version on the Lockheed Martin network.

p is the pressure resulting from the interference fit given by Equation 5.2.5-2 (psi)
$R_{inner\text{-}lug}$ is the inner radii of the lug (in)
$R_{outer\text{-}lug}$ is the outer radii of the lug (in)
Additionally, the maximum shear stress in the lug/plate at this location is

$$\gamma_{shear} = (\sigma_{tan} - \sigma_{rad}) / 2$$ **Equation 5.2.5-5**

where
σ_{tan} is the tangential stress in the lug given by Equation 5.2.5-4
σ_{rad} is the radial stress in the lug given by Equation 5.2.5-3

The maximum radial stress on the bushing subjected to an external crushing pressure occurs at the outer surface of the bushing and is given by

$$\sigma_{rad\text{-}bushing} = -p$$

where
p is the pressure resulting from the interference fit given by Equation 5.2.5-2 (psi)

The maximum tangential stress for the bushing occurs at the inner surface and is given by

$$\sigma_{tan\text{-}bushing} = -2pR_{outer\text{-}bush}^2 / (R_{outer\text{-}bush}^2 - R_{inner\text{-}bush}^2)$$ **Equation 5.2.5-6**

where
p is the pressure resulting from the interference fit given by Equation 5.2.5-2 (psi)
$R_{inner\text{-}bush}$ is the inner radii of the bushing (in)
$R_{outer\text{-}bush}$ is the outer radii of the bushing (in)

While the ultimate strength of the material cannot be exceeded due to installation stresses, this is rarely an issue in the lug or plate. The allowable press fit stress in the lug is governed primarily by a concern of the potential for stress corrosion cracking in transverse grain material orientation, particularly short transverse. The analyst should consult with program specific Durability and Damage Tolerance personnel to determine if there are program guidelines on preferred practices or allowable stresses. In the absence of specific program guidelines, refer to Section 3.4.7 for a discussion of stress corrosion cracking and interference bushing installations.

The resultant principal stresses in the lug/plate would be

$$f_{1,2} = 0.5[(\sigma_{rad} + \sigma_{tan}) \pm (4\gamma_{shear}^2 + (\sigma_{rad} - \sigma_{tan})^2)^{1/2}]$$ **Equation 5.2.5-7**

where
σ_{rad}, σ_{tan} are the radial and tangential stresses, respectively, resulting from the installation of an interference fit bushing (see discussion above) (psi)
γ_{shear} is the shear stress resulting from the installation of an interference fit bushing (psi)

And the margin of safety in the plate / lug would be

$$M.S. = F_{requirement} / MAX(f_1,f_2) - 1$$ **Equation 5.2.5-8**

where
$F_{requirement}$ is the maximum allowable stress to prevent premature failure due to stress corrosion cracking (psi) (Reference Section 3.4.7 or program guidance.)
f_1, f_2 is the principal stress in the lug given by Equation 5.2.5-7

Note: Margin of safety checks for this failure mode are only required for bushings installed in materials rated C or D per Reference 5-4, Section 3.1.2.3 where the bushing will be loaded in the short transverse direction and the mean diametrical interference exceed values shown in Figure 3.4.7-7. From a practical perspective, sheet/plate material less than 0.110 inch thick, as rolled, does not have a short transverse direction.

Copyright 2017 Lockheed Martin Corporation.
Note: The current version is always the version on the Lockheed Martin network.

The margin of safety in the bushing would be

$$M.S. = F_{cy} / (K_{ftg} K_{yld} \sigma_{tan\text{-}bushing}) - 1$$ **Equation 5.2.5-9**

where
F_{cy} is the bushing material allowable compression yield stress (psi)
$\sigma_{tan\text{-}bushing}$ is the bushing tangential stress given by Equation 5.2.5-6
K_{ftg} is the appropriate, program approved fitting factor
K_{yld} is the criterion yield factor for limit load

5.2.5.2 Pin Bearing Stress in the Bushing

An analysis of the bearing stress in the bushing due to the applied pin load on the bushing must be performed. Since bushings are subjected only to a block compressive stress, rupture is impossible and yielding will govern. If the bushing conforms to the recommended wall thickness of 12% of the bushing outer diameter and a minimum of 0.030 in, independent of material, FEA results indicate that the minimum principal stresses that result show local yielding of the bushing at a pin load of

$$P_{br\text{-}yield\text{-}ALLOW} = 1.20 F_{cy} A_{br}$$ **Equation 5.2.5-10**

where
F_{cy} is the compressive yield strength of the bushing (psi)
A_{br} is the bearing area of the pin on the bushing (in^2)

If the bushing wall thickness is less than 12% of the outer diameter of the bushing, then the allowable is reduced to

$$P_{br\text{-}yield\text{-}ALLOW} = F_{cy} A_{br}$$ **Equation 5.2.5-11**

When calculating the bearing area in the above equation, account for any chamfers or lubrication grooves which may be present on the internal surface of the bushing. If a chamfer is present the bearing area of the bushing can be calculated as

$$A_{br} = D\, w_{eff}$$ **Equation 5.2.5-12**

where
D is the nominal diameter of the pin (in)
w_{eff} is the effective thickness for the bushing, shown in Figure 5.2.5-2. If no chamfer is present then $w_{eff} = w_{bushing}$ (in)

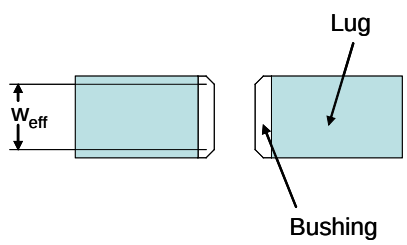

Figure 5.2.5-2 Effective Thickness for Bushing Area Calculation

The margin of safety can be calculated from

$$M.S. = 1.5 P_{br\text{-}yield\text{-}ALLOW} / (K_{ftg} K_{yld} P) - 1$$ **Equation 5.2.5-13**

where
1.5 is limit to ultimate load factor
K_{ftg} is the appropriate, program approved fitting factorK_{yld} is the criterion yield factor for limit load
$P_{br\text{-}yield\text{-}ALLOW}$ is the appropriate allowable yield load from Equation 5.2.5-10 or 5.2.5-11 depending on bushing wall thickness (lbs)
P is the ultimate applied pin load (lbs)

Copyright 2017 Lockheed Martin Corporation.
Note: The current version is always the version on the Lockheed Martin network.

5.2.5.3 Bushing Pushout Forces

When press fit bushings are used, there is always a concern of the bushing migrating out of the hole due to side forces, intended or unintended, or insufficient interference forces. If side forces are possible, then bushing retention hardware should be included in the design. Additionally, for highly loaded bushings, such as those that would be found in a wing joint, rudder actuator, leading edge flaps, positive retention hardware is recommended and the retention should not rely solely on the interference fit of the bushing in the lug or clevis.

The amount of retention force present along the axis of the bushing perpendicular to its diameter, for an interference fit bushing is a function of the degree of interference, the length of the bushing and the coefficient of friction between the bushing and the hole in which it is installed. It can be estimated as[12]

$$P = 2\pi L R_{outer-bush} p \mu$$

where
L is the length of the bushing (in)
$R_{outer-bush}$ is the outer diameter of the bushing (in)
p is the pressure due to the interference fit from Equation 5.2.5-2 (psi)
μ is the static coefficient of friction

The static coefficient of friction is defined as the ratio of the tangential force required to produce sliding divided by the normal force between the surfaces. The coefficient can vary significantly and some typical values are provided in Table 5.2.5-1, taken from Reference 5-23. For critical installations it is recommended that a bushing push out test be conducted with the specific installation configuration.

Table 5.2.5-1 Dry Static Coefficients of Friction (Reference 5-23)

Material Combinations	μ
Aluminum-Aluminum	1.05-1.35
Titanium-Aluminum	0.41
Titanium-Titanium	0.36
Titanium-Bronze	0.36
Steel-Aluminum Bronze	0.45
Steel – Aluminum	0.61

5.2.5.4 Criteria for Manganese-Bronze Landing Gear Attachment Bushings

This section addresses special analysis requirements which have been successfully used on legacy programs for AMS-4862 manganese-bronze bushings installed in in landing gear trunnions and drag brace fittings. This approach shall not be used for other materials and applications.The bearing factors for this application are given in Table 5.2.5-2.

Table 5.2.5-2 Dynamic Factors, K_{DF}, for Manganese-Bronze Landing Gear Attachment Bushings

	K_{DF}, Vibration but no Shock	K_{DF}, Shock and Vibration
No rotation under Design Loads	2	4
Infrequent Rotation under Design Loads	4	5

Typically shock is considered to occur in Landing Gear Installations during Landing and Retraction. Landing Grear undergo relative rotation during retraction but may or may not have relative rotation under landing loads.

[12] Reference 5-24

Copyright 2017 Lockheed Martin Corporation.
Note: The current version is always the version on the Lockheed Martin network.

Manganese-bronze material properties are obtained from the specification, AMS-4862, and are repeated here for convenience. These are specification minumums and only F_{tu} and F_{ty} are provided. F_{cy} is assumed to be equal to F_{ty}.

Material Property	S-Basis Value
F_{tu} (psi)	110,000
F_{ty} (psi) ~ F_{cy}	60,000

Material properties should be adjusted for temperature exposure when applicable.

The bushing ultimate and yield allowable loads can be calculated as follows

$$P_{br\text{-}ult} = 2.96F_{tu}A_{br} \qquad \textbf{Equation 5.2.5-14}$$

$$P_{br\text{-}yield} = 1.85F_{cy}A_{br} \qquad \textbf{Equation 5.2.5-15}$$

where
A_{br} is the bearing area calculated from Equation 5.2.5-12
F_{tu} is the ultimate tensile strength given above (psi)
F_{cy} is the yield compression strength given above (psi)

Note that the factors provided in the above equation are valid for bushings which have a wall thickness of 0.063 in or more.

The margins of safety are written as

$$M.S. = P_{br\text{-}ult}/(K_{DF}P) - 1 \quad (ultimate) \qquad \textbf{Equation 5.2.5-16}$$

$$M.S. = 1.5P_{br\text{-}yield}/(K_{ftg}K_{yld}P) - 1 \quad (yield) \qquad \textbf{Equation 5.2.5-17}$$

where
1.5 is limit to ultimate load factor
K_{ftg} is the appropriate, program approved fitting factor, typically 1.15
K_{DF} is the appropriate dynamic factor from Table 5.2.5-1
K_{yld} is the criterion yield factor for limit load
$P_{br\text{-}yield}$ is the allowable yield load from Equation 5.2.5-15
$P_{br\text{-}ult}$ is the allowable ultimate load from Equation 5.2.5-14
P is the ultimate applied pin load (lbs)

5.2.6 Hollow Fastener Analysis

Fasteners which are solid or which have a $D_{bolt}/t_{bolt}<10$ are analyzed in Section 5.2.3.3. Fasteners of that type fail in bending according to classical plastic failure modes. For hollow fasteners whose $D_{bolt}/t_{bolt} \geq 10$, failure occurs in local instability prior to reaching the modulus of rupture. The tool suite IDAT offers two analysis packages that look at hollow fasteners. IDAT/SM01 automates the methods for hollow fastener analysis found in SM07. Additionally, IDAT/SFBOLT provides an analysis of hollow fasteners in shear joints and uses the IDAT fastener database which contains allowables for bending, tension and shear for common hollow fasteners.

Copyright 2017 Lockheed Martin Corporation.
Note: The current version is always the version on the Lockheed Martin network.

5.3 Fittings

Fittings are discrete pieces of structure which are designed to transfer a highly concentrated load from one structural member or component to another. Examples of fittings would include tension fittings, bathtub-type fittings, shear clips, splice tees or splice angles and so forth. Because of the limited number of fasteners, high concentration of loads and, potentially catastrophic results if failure occurs, there are recommended fitting factors for use in design which are shown in Table 5.3.0-1. Lug and Clevis fittings are examined in Section 5.4.

Table 5.3.0-1 Summary of Recommended Joint Factors[1]

Factor	Limit or Ultimate	Description	When recommended
1.15	Ultimate or both, when required by program	Joint fitting factor	Recommended for joints not subject to static ultimate load testing of critical condition.
1.10	Both	Barrel nut factor	Recommended when barrel nuts are used to account for manufacturing tolerances on installation
K_{ftg} = Product of all applicable factors			
Program or customer specific guidelines govern the use of these or other fitting factors.			

If the aircraft program has a specific detrimental deformation criterion, *e.g.*, "No detrimental deformation at or below 1.15xLimit Load," then a yield factor, K_{yld}, would additionally apply for limit load. Caution must be used when applying this factor to the applied loads, particularly if they include thermal and mechanical components which may have different load factors, *e.g.*, 1.15 versus 1.5. This requires an alternative approach to develop the correct load level to meet the criteria. The intent is that both a fitting factor and a 1.15 factor on DLL be applied.

In addition to the above factors, many programs require a minimum margin of safety of 0.20 (or an additional factor of 1.20) on all tension joints to account for manufacturing limitations resulting in non-parallel mating surfaces and non-perpendicular holes as well as tolerances on hole location.

Tension joints, while sometimes necessary, are the least efficient method of joining two pieces of structure. There are several guidelines recommended for use in the design of **tension fitting joints**:

- Tension fitting joints should be joined with ¼ in or larger, 180 ksi or greater, steel tension-rated bolts[2] and nuts torqued to specification limits with steel tension rated washers under the head and nut.
- Fasteners shall be torqued to keep end-pad surfaces in contact throughout the range of loading to minimize fastener tension cyclic loading and secondary end-pad bending and improve fatigue life.
  - Section 5-5 has a discussion of tension joint preload, a method for calculating optimum bolt preload for highly loaded tension joints and how to calculate the separation load.
  - Surface contact should be maintained, *i.e.* no separation, to a minimum of 1.15xLimit Load or 1.15x Maximum Spectrum Load, whichever is higher.

[1] If a part being analyzed is a casting, the larger of (the appropriate casting factor or the joint fitting factor) should be used.

[2] Not all fasteners with published tension allowables are tension rated. Rivets, blinds, reduced head fasteners, lockbolts, HiLoks and Hi Teagues are not used in tension fittings. Aluminum nuts shall not be used.

Copyright 2017 Lockheed Martin Corporation.
Note: The current version is always the version on the Lockheed Martin network.

- To minimize secondary bending effects and joint eccentricities, the mating surfaces should be in contact, be parallel and the fastener perpendicular to the mating surface. To that end, the analyst shall verify the following
  - The fastener installation tolerances for highly loaded tension joints ensure that the tension fastener holes between the mating parts are lined up and drilled perpendicular to the end-pad surfaces.
  - The mating operation for the two adjoining parts also ensures that the end-pad surfaces are parallel.
  - Any additional machining operations which are performed to ensure tight tolerances result in maintaining the minimum end-pad thicknesses
  - Any shim and radius block materials used are of equal stiffness and strength to the washer material.
  - Mating surfaces should be of similar strength and stiffness to minimize potential for non-uniformity of loading.
- In aluminum, the minimum thickness of the end-pad is recommended to be approximately the same as the diameter of the end-pad fastener. For steel and titanium, the end-pad thickness should not be less than 85% of the fastener diameter. The end-pad thickness shall be equal to or greater than the adjacent maximum wall or base thickness.
- Fillet radii, where the end-pad intersects the wall or base, should be as large as possible. The minimum fillet radius should be the larger of the average of the adjacent thicknesses or 0.13 inch.
  - All testing that was done in support of these analysis techniques adhered to these rules and although the fillet radii are not taken into account explicitly in the analysis, it is unknown what deleterious effect small radii would have on the analysis methodology. Small radii at locations of cross-sectional changes do cause stress concentrations and can create fatigue issues in addition to whatever static problems may result.

This section is subdivided into discussions of bathtub fittings, tension clips, rod end fittings, and beam-in-socket and flange bending analyses. Also note that IDAT both have analysis routines which automate some of the methods found in this section. Some of the programs found in IDAT for fittings include:

- IDAT/FITTING – Bathtub analysis of semicircular bathtub fittings, channel, angle and pi fittings
- IDAT/FLANGE – Flange Bending Analysis
- IDAT/LUG – Lug, clevis and bushing analysis per PM4057
- IDAT/SM01 – Lug, clevis and bushing analysis per the Lockheed Stress Memo Manual

5.3.1 Bathtub Fitting Analysis

There are four types of fittings included in this general category. They include the semicircular bathtub fitting, the channel fitting, the angle fitting and the pi-type fitting. These are all fittings in which load is input to the fitting in a tension application and is transferred out through shear, either through an integral attachment or through shear fasteners into adjacent backup structure. Typically, the checks performed for this type of analysis are

- Wall Analysis
  - Tension in the Wall
  - Bending in the Wall
  - Interaction of tension and bending in the Wall
- End-pad Analysis
  - End-pad Bending
  - End-pad Shear

This method does not account for any shear on the end-pad fastener as there is generally only tension load being transferred at this location. If there is a shear load as well as a tension load being transferred, the analyst must ensure there is a minimum of 2D edge distance.

Copyright 2017 Lockheed Martin Corporation.
Note: The current version is always the version on the Lockheed Martin network.

The original analysis methodology was derived to take advantage of full plastic behavior although, depending on program or customer specific direction, the same techniques could be used with F_{tu} rather than mc/I bending modulus. In addition, there are fastener tension and shear checks which must be done as well as bearing checks of the shear fasteners in the walls of the fittings. These are not detailed in this section.

The fit of the fasteners through the wall or base, attaching the fitting to adjacent structure, should have a maximum bolt-to-hole clearance of 0.004 with a transition or interference fit preferred. The fit of the fastener in the end-pad depends on the application. If only tension load is present then the bolt-to-hole clearance is typically 0.005 to 0.015. If the load in the end-pad is a combination of tension and shear, then a maximum bolt-to-hole clearance of 0.004 should be maintained.

5.3.1.1 Semicircular Bathtub Fitting

A typical semicircular bathtub fitting is shown in Figure 5.3.1-1. A detailed derivation of the methodology and test data for this type of fitting can be found in Reference 5-17, FZM8880. A summary of the parameter limitations is given for this type of analysis in the table below.

Table 5.3.1-1 Parameter Limitations Semi-Circular Bathtub Fitting

$R_a/t_w \leq 10$
$t_e \geq t_w$ at intersection, t_w may taper away from end-pad
$t_e / D_{bolt} \geq 1.0$ *(recommended)*
$t_e \geq t_w, t_b$
$e/D_{bolt} \geq 1.74$ AND entire fastener head or washer surface must lie on end-pad.
If shear load is being transferred, $e/D \geq 2.0$

5.3.1.1.1 Semicircular Bathtub Wall Analysis

The wall analysis is a classical axial plus bending calculation of stress which is then combined using the methodology outlined in Section 6.3.6 of this manual. To calculate the wall tension stress, P/A, P is the applied bolt tension load and A is the area of the semicircular wall given by

$$A=(\pi/2)(R_o^2-R_i^2)$$ **Equation 5.3.1-1**

where
R_o is the outer radius of the semicircular fitting (in)
R_i is the inner radius of the semicircular fitting (in)

If the section under consideration has fastener holes for shear load transfer then the area would be reduced by a net section factor, η, from Section 5.2.3.2. If the area being analyzed does not include a fastener hole then η = 1. The wall tension stress is given by

$$f_t = P/(\eta A)$$ **Equation 5.3.1-2**

where
P is the applied bolt tension load (lbs)
A is the area of the wall of the semicircular fitting given in Equation 5.3.1-1
η is the net section factor which can be calculated from Section 5.2.3.2

Copyright 2017 Lockheed Martin Corporation.
Note: The current version is always the version on the Lockheed Martin network.

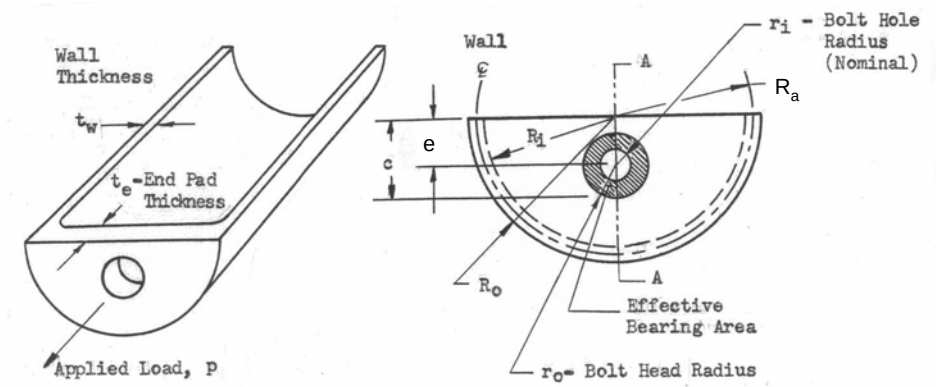

Figure 5.3.1-1 Typical Geometry, Semicircular Bathtub Fitting

The wall bending stress is also a classical check of mc/I bending where the moment is a function of the offset of the center of the bolt to the neutral axis of the section.

The moment of inertia and location of the centroid for the half cylinder are given by

$$I=(\pi/8-8/(9\pi))(R_o^4-R_i^4) - [8R_o^2R_i^2(R_o-R_i)] / [(9\pi)(R_o+R_i)]$$

$$I = 0.1098(R_o^4 - R_i^4) - \frac{0.283R_o^2R_i^2(R_o - R_i)}{R_o + R_i}$$ **Equation 5.3.1-3**

$$c=4/(3\pi)(R_o^2+R_oR_i+R_i^2)/(R_o+R_i)$$

$$c = 0.4244\frac{R_o^2 + R_oR_i + R_i^2}{R_o + R_i}$$ **Equation 5.3.1-4**

where
R_o is the outer radius of the semicircular bathtub fitting (in)
R_i is the inner radius of the semicircular bathtub fitting (in)

These are derived from equations for a hollow semicircle. Using the centroid, c, and the location of the bolt hole, e, as shown in **Figure 5.3.1-1**, the applied moment in the wall can be calculated as

$$m_{appl}=P(c-e)$$ **Equation 5.3.1-5**

where
P is the applied bolt load (lbs)
c is the centroid of the semicircular section given in Equation 5.3.1-4. (in)
e it the distance from the center of the hole to the edge of the fitting end-pad (in)

The free flanges of the semicircular section are in tension and the moment, m_{appl}, is positive if the section centroid, c, is farther from the free edge than the location of the hole, e.

The margin of safety is obtained from a combined margin of safety check. For a fully plastic analysis, the allowable moment, M_{allow}, can be obtained from PM4057, Section 6.3. This is an unsymmetrical section; however, a 1954 review of the test data determined that calculation of the modulus of rupture could be determined for this section with sufficient accuracy using a symmetric section with a section factor, k, of 1.698[1], the section factor for a solid round section. **Section 6.3.2** can be used to determine $M_{allow\text{-}ultimate}$ and **Section 6.3.2.1** can be used to determine $M_{allow\text{-}yield}$.

[1] Unpublished supplement to LR2072, Reference 5-13.

Copyright 2017 Lockheed Martin Corporation.
Note: The current version is always the version on the Lockheed Martin network.

If it is desirable to conservatively use Ftu rather than the modulus of rupture, M_{allow} can be calculated from

$$M_{allow\text{-}ult}=F_{tu}I/c \qquad \textbf{Equation 5.3.1-6}$$

$$M_{allow\text{-}yield}=F_{ty}I/c \qquad \textbf{Equation 5.3.1-7}$$

where
I is the moment of inertia of the semicircular fitting given in Equation 5.3.1-3 (in^4)
c is the distance from the centroid to the extreme fiber given by Equation 5.3.1-4 (in)

Once the allowable moments have been calculated, either from Section 6.3.2 for a fully plastic analysis or by use of Equations 5.3.1-6 and 5.3.1-7 when based on F_{tu} and F_{ty}, the tension and bending ratios can be determined for ultimate analysis from

$$R_t=(K_{ftg}\, f_t) / F_{tu} \qquad \textbf{Equation 5.3.1-8}$$

$$R_b=(K_{ftg}\, m_{appl}) / M_{allow\text{-}ultimate} \qquad \textbf{Equation 5.3.1-9}$$

where
f_t is the applied tension stress (psi)
F_{tu} is the allowable ultimate tensile stress obtained from Reference 5-4 (psi)
m_{appl} is the applied moment (in-lbs)
$M_{allow\text{-}ultimate}$ is the ultimate allowable moment from Section 6.3.2 or from Equation 5.3.1-6. (in-lbs)
K_{ftg} is the appropriate, program approved joint factor. See Section 5.3.

Then, for yield analysis[1]

$$R_{t\text{-}yield}=K_{ftg}\bullet K_{yld}\bullet f_t/(1.5F_{ty}) \qquad \textbf{Equation 5.3.1-10}$$

$$R_{b\text{-}yield}= K_{ftg}\bullet K_{yld}\bullet m_{appl}/(1.5M_{allow\text{-}yield}) \qquad \textbf{Equation 5.3.1-11}$$

where
1.5 is the limit to ultimate factor
f_t is the applied tension stress (psi)
F_{ty} is the allowable yield tensile stress obtained from Reference 5 (psi)
m_{appl} is the applied moment (in-lbs)
$M_{allow\text{-}yield}$ is the yield allowable moment from Section 6.3.2.1 or from Equation 5.3.1-7(in-lbs)

A plastic bending margin of safety based on the modulus of rupture can be determined from Section 6.3.6.1, PM4057, where the interaction exponent, r, is determined for K_{geom} of a solid round cylinder. The steps are summarized, without discussion in **Table 5.3.1-2.** Also listed is the reference location for further discussion of the equation. Section 5.3.1.5 will provide an example of this type of analysis.

Table 5.3.1-2 Calculating Combined Tension and Plastic Bending Margin of Safety for Semicircular Bathtub Fitting

Calculate	Equation/Graph	Source
Material Plasticity Factor	$\gamma=(mc/I)_{b,k=2.0} / F_{tu} - 1$	Equation 6.3.6-4, Section 6, PM4057
K_{geom}	2.36 (Solid Round Cylinder)	Figure 6.3.6-1, Section 6, PM4057
Interaction Exponent, r	$r = [(K_{geom}+2)\gamma/4.0]+1$ when $K_{geom} > 2.14$	Figure 6.3.6-1, Section 6, PM4057
Obtain $R_{t\text{-}allow}$ or $R_{b\text{-}allow}$	using R_t,R_b,r	Figure 6.3.6-2, Section 6, PM4057

[1] Some programs require the use of a fitting factor at limit load. Others may require detrimental deformation checks to be performed at some percent of limit load. These equations should be adjusted appropriately using K_{yld} and K_{ftg}. See discussion Section 5.3. Typically for bending stress in the walls, use of F_{ty} for this check is very conservative as local yielding is not detrimental; as result, use of the yield bending modulus is strongly recommended.

Copyright 2017 Lockheed Martin Corporation.
Note: The current version is always the version on the Lockheed Martin network.

Calculate Ultimate M.S. based on the bending modulus of rupture	M.S. = $R_{b\text{-}ALLOW}/(R_b)-1$ OR M.S. = $R_{t\text{-}ALLOW}/(R_t)-1$	Equation 6.3.6-7, Section 6, PM4057
Calculate Yield M.S. based on the yield bending modulus	M.S. = $R_{b\text{-}ALLOW}/(R_{b\text{-}yield})-1$ OR M.S. = $R_{t\text{-}ALLOW}/(R_{t\text{-}yield})-1$	Equation 6.3.6-7, Section 6, PM4057

If an analysis based on the bending modulus is not desired due to programmatic or customer direction, then the tension and bending stress ratios from Equation 5.3.1-8 and 5.3.1-9 based on F_{tu} and Equations 5.3.1-10 and 5.3.1-11 based on F_{ty} can be used in the following equations to determine the margin of safety.

$$M.S.\ (ULT) = 1/(R_b+R_t)-1$$ **Equation 5.3.1-12**

$$M.S.\ (Yield) = 1/(R_{b\text{-}yield}+R_{t\text{-}yield})-1$$

where
R_b is the bending stress ratio calculated in Equation 5.3.1-9 (ultimate) or Equation 5.3.1-11 (yield) with the allowable bending moment based on F_{tu} or F_{ty}
R_t is the tension stress ratio calculated in Equation 5.3.1-8 (ultimate) or Equation 5.3.1-10 (yield).

5.3.1.1.2 Semicircular Bathtub End-pad Analysis

The remaining item to analyze in the semicircular bathtub fitting is the end-pad. The end-pad is subjected to bending as the fastener load is transferred to the walls to be sheared into adjacent structure. It is also subject to shear loading with the application of the fastener load.

The derivation of the end-pad bending stress equations is provided in FZM8880, Reference 5-17, and will not be repeated here. It is a combination of classical plate bending theory which has been adjusted to more closely correlate with testing.
Thus the stress acting on Section A-A, **Figure 5.3.1-1**, at the center of the end-pad is given by

$$f_{b\text{-}end\text{-}pad} = K_1 K_{fix} P/t_e^2$$ **Equation 5.3.1-13**

$$K_1 = \left(1.2 \bullet 1.5 \bullet \frac{3}{4\pi}\right)\left[\frac{2}{1-\left(\frac{r_i}{R_a}\right)^2}\right]\left[0.5+3\ln\left(\frac{R_a-e}{r_o}\right)-0.5\frac{r_o^2}{(R_a-e)^2}\right]$$

$$K_{fix} = max[\{0.296433 - 0.006141(t_e/t_w) + 0.148112(t_e/t_w)^2 - 0.05691121(t_e/t_w)^3 + 0.00967867(t_e/t_w)^4 - 0.00079776(t_e/t_w)^5 + 0.000025933(t_e/t_w)^6\},0.39]$$

where
K_1 represents a simply supported circular plate, uniformly loaded over a circle which is concentric to an eccentric hole in the plate with factors for being semicircular and plasticity.
K_{fix} represents the influence of the wall thickness on the fixity of the end-pad. **(K_{fix} = 0.39 is Fixed)**
P is the bolt load (lbs)
t_e is the end-pad thickness (in)
t_w is the wall thickness (in)
r_i is the radius of the end-pad bolt hole (in)
r_o is the radius of the bolt head (in)
R_a is the average radius of the wall, *i.e.*, $(R_i+R_o)/2$. (in)
e is the distance from the center of the hole to the free edge of the fitting end-pad. (in)

Prior to using the stresses calculated by Equation 5.3.1-13 for a durability or damage tolerance analysis, the analyst needs to understand the source of the equations. The factor, K_1, includes the effects of a hole in the

Copyright 2017 Lockheed Martin Corporation.
Note: The current version is always the version on the Lockheed Martin network.

end-pad both as a net section as well as a stress concentration effect. The stresses are calculated at the edge of the hole and would be decreasing away from there. In addition the equations are derived using a full plastic Poisson's ratio. See Reference 5-17 for the derivation.

The allowable used in the margin of safety calculation is based on the method outlined for plastic bending analysis in Section 6.3 for a symmetric rectangular section. Thus, using k=1.5, Section 6.3.2 can be used to determine $M_{allow\text{-}ultimate}$ and Section 6.3.2.1 can be used to determine $M_{allow\text{-}yield}$. The margin of safety at ultimate can then be calculated from

$$M.S.(end\text{-}pad) = F_{tu} /(K_{ftg}\, f_{b\text{-}end\text{-}pad}) - 1 \quad \textbf{ULTIMATE or} \qquad \textbf{Equation 5.3.1-14}$$

$$M.S.(end\text{-}pad) = (mc/I)_b/(K_{ftg} f_{b\text{-}end\text{-}pad}) - 1 \quad \textbf{ULTIMATE - PLASTIC}$$

where
F_{tu} is the ultimate allowable tension stress from Reference 5-4 or other suitable reference. (psi)
$(mc/I)_b$ is the bending modulus calculated per Equation 6.3.2-2, PM4057. (psi)
$f_{b\text{-}end\text{-}pad}$ is the end-pad bending stress from Equation 5.3.1-13. (psi)
K_{ftg} is the appropriate, program approved joint factor. (See Discussion, Section 5.3)

And the margin of safety at yield is given by

$$M.S.(end\text{-}pad) =(1.5F_{ty})/ (K_{yld}\bullet K_{ftg}\bullet f_{b\text{-}end\text{-}pad}) - 1 \quad \textbf{YIELD or} \qquad \textbf{Equation 5.3.1-15}$$

$$M.S.(end\text{-}pad) =(1.5(mc/I)_{b\text{-}yield})/(K_{yld}\bullet K_{ftg}\bullet f_{b\text{-}end\text{-}pad}) - 1 \quad \textbf{YIELD-PLASTIC}$$

where
1.5 is the limit to ultimate factor
F_{ty} is the yield allowable tension stress from Reference 5-4 or other suitable reference. (psi)
$(mc/I)_b$ is the bending modulus calculated per Section 6.3.2.1, PM4057. (psi)
$f_{b\text{-}end\text{-}pad}$ is the end-pad bending stress from Equation 5.3.1-13. (psi)
K_{yld} is the yield factor (See Section 5.3)
K_{ftg} is the yield fitting factor (See Section 5.3)

The shear in the end-pad is due to fastener pull-through and is given by

$$f_s=P/(2\pi r_o t_e) \qquad \textbf{Equation 5.3.1-16}$$

where
P is the bolt load (lbs)
r_o is the radius of the bolt head or tension steel washer (in)
t_e is the end-pad thickness (in)

Note that the benefit of the larger surface area of a washer can only be utilized if it is a steel washer which will work to distribute the load over a larger area. Aluminum or very thin steel washers have been shown to deform when bolt torque is applied, thus being ineffective in resisting the pull-through load.

The margin of safety is given by

$$M.S.\ (shear) = F_{su}/(K_{ftg}\, f_s) - 1 \qquad \textbf{Equation 5.3.1-17}$$

where
F_{su} is the allowable ultimate shear stress obtained from Reference 5-4 (psi)
K_{ftg} is the appropriate, program approved joint factor (See Discussion, Section 5.3).
f_s is the applied shear stress (psi)

5.3.1.2 Channel Fitting

Typical channel fitting geometry is shown in Figure 5.3.1-3. This type of fitting is used in similar applications to the semicircular fitting; however, it is often integrally machined into a larger structure like a rib or spar. A detailed derivation of the stresses and test data for this type of fitting is also included in

Copyright 2017 Lockheed Martin Corporation.
Note: The current version is always the version on the Lockheed Martin network.

FZM8880, Reference 5-17. A summary of the parameter limitations for this analysis is given in the table below.

Table 5.3.1-3 Parameter Limitations for Channel Fittings

$(H-t_b/2)/t_w \leq 7$ for one edge free $(B-t_w)/t_b \leq 20$ for no edge free otherwise crippling of fitting MUST be considered
$t_e / D_{bolt} \geq 1.0$ *(recommended)*
$t_e \geq t_w, t_b$
$e/D_{bolt} \geq 1.74$ AND entire fastener head or washer surface must lie on end-pad.
If shear load is being transferred by the fastener, $e/D \geq 2.0$

If the channel fitting is integrally machined and located side-to-side or back-to-back with an adjacent fitting some assumptions need to be made concerning the thickness of shared walls. Figure 5.3.1-2 shows the recommended assumptions.

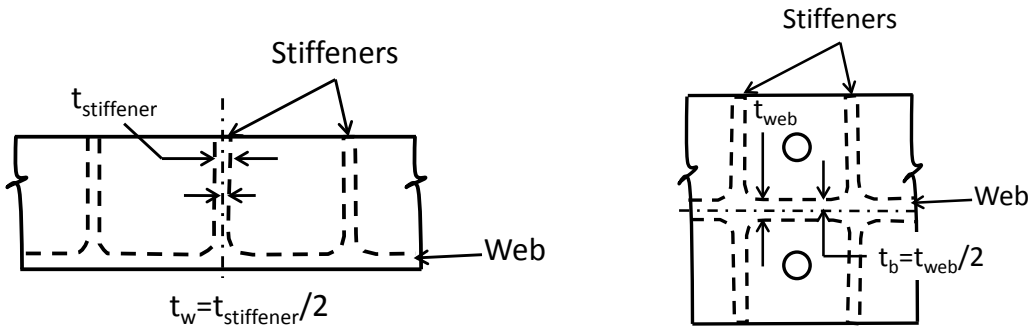

Side-to-side integral fittings

Back-to-back integral fittings

Figure 5.3.1-2 Wall Thickness Assumptions for Shared Wall Integral Fittings

5.3.1.2.1 Channel Fitting Wall Analysis

The wall analysis is a classical axial plus bending calculation of stress which is then combined using the methodology outlined in Section 6.3.6 of this manual. To calculate the wall tension stress, P/A, P is the applied bolt tension load and A is the area of the channel section given by

$$A=2\,[H_{wall}t_w+(1-\pi/4)R_{fillet}^2]+t_b\bullet(B-2t_w) \qquad \textbf{Equation 5.3.1-18}$$

where
H_{wall} is the total height of the channel wall at the critical section. (in)
B is the total width of the channel. (in)
t_w is the wall thickness (in)
t_b is the base thickness (in)
R_{fillet} is the fillet radius at the intersection of the wall and base (in).

Because the channel may be tapered, this calculation may need to be done for several sections before the critical section is found. Also, if the channel is not integral to a larger structure, it is generally attached either along the walls or along the base or both. If this is the case, a net section factor must be calculated per Section 5.2.3.2.

Thus, the wall or base tension stress is given by

$$f_t = P/(\eta A) \qquad \textbf{Equation 5.3.1-19}$$

where
P is the applied bolt tension load (lbs)
A is the area of the wall/base of the channel fitting given in Equation 5.3.1-18
η is the net section factor which can be calculated from Section 5.2.3.2

Copyright 2017 Lockheed Martin Corporation.
Note: The current version is always the version on the Lockheed Martin network.

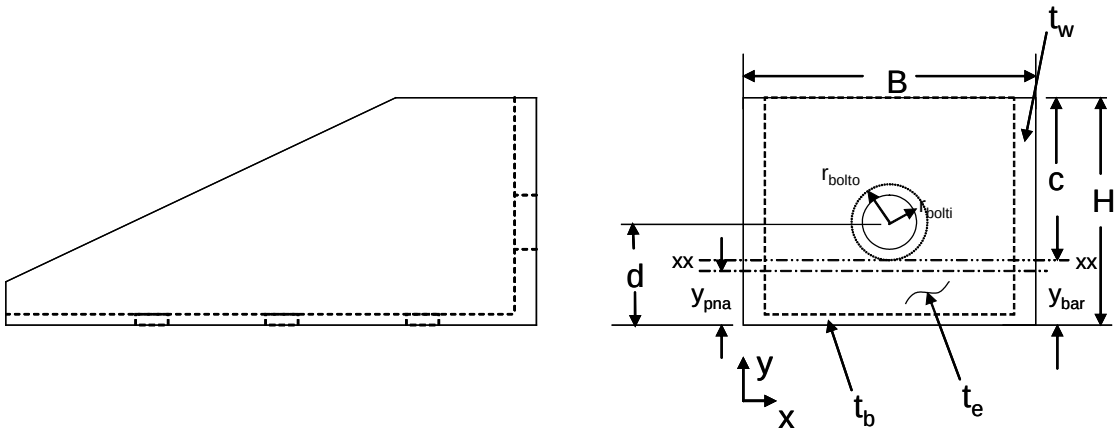

Figure 5.3.1-3 Typical Geometry, Channel Fitting

The wall bending stress is a classical check of mc/I bending where the moment is a function of the offset of the center of the bolt to the neutral axis of the channel section. If the section is fully plastic, this neutral axis must be the plastic neutral axis[1], y_{pna}, as described in Section 6.3.3, PM4057. If the analysis does not take advantage of plasticity, then Equations 5.3.1-20 and 5.3.1-21 describe the calculation of the centroid and moment of inertia.

These equations should not be used if the section is plastic. The moment of inertia and location of the centroid for the channel are given by

$$I_{xx}=[2t_wH_{wall}^3+(B-2t_w)t_b^3]/3 - Ay_{bar}^2 \qquad \textbf{Equation 5.3.1-20}$$

$$y_{bar}=[2H_{wall}^2t_w+t_b^2(B-2t_w)] / [2BH_{wall} - 2(B-2t_w)(H_{wall}-t_b)] \qquad \textbf{Equation 5.3.1-21}$$

where
t_w is the wall thickness (in)
t_b is the base thickness (in)
H_{wall} is the total height of the channel section at the location being analyzed (in)
B is the total width of the channel. (in)

If more accurate values are available from CATIA or CADAM, they may be used.

Using the centroid, y_{bar}, or the plastic neutral axis, y_{pna}, and the location of the bolt hole, d, as shown in Figure 5.3.1-3, the moment and the bending stress in the wall are calculated as

$$m_{appl}=P(d-y_{bar}) \qquad \textbf{Equation 5.3.1-22}$$

$$m_{plastic}=P(d-y_{pna}) \qquad \textbf{Equation 5.3.1-23}$$

where
P is the applied bolt load (lbs)
y_{bar} is the geometric centroid of the channel section given in Equation 5.3.1-21 (in)
y_{pna} is the plastic neutral axis of the channel section as determined from Section 6.3.3, PM4057 (in)
d is the distance from the center of the hole to the base of the fitting end-pad (in)

Note the moment changes as the section becomes plastic and the axis about which the bending takes place shifts from y_{bar} to y_{pna}. Also note that when plastic bending is utilized, a bending stress is not calculated.

[1] The plastic neutral axis is defined as the axis which divides the cross-section into areas which support equal loads under bending in the plastic region.

Copyright 2017 Lockheed Martin Corporation.
Note: The current version is always the version on the Lockheed Martin network.

Rather, a moment is determined which is compared to the allowable moment. This is because in the plastic region stresses are not linear.

The margin of safety is obtained from a combined margin of safety check. For a fully plastic analysis, the allowable moment M_{allow} is obtained (using moment of inertia about the plastic neutral axis and y_{pna}) from PM4057, Section 6.3.3, Unsymmetrical Sections, or Section 6.3.4, Local Crippling, as appropriate to the specific geometry and loading of the fitting being analyzed. An example calculation of this type can be found in Section 5.3.1.5.2.

Once the allowable moments have been calculated from Section 6.3.3, the tension and bending stress ratios are determined for ultimate analysis from

$$R_t=(K_{ftg}f_t) / F_{tu}$$ **Equation 5.3.1-24**

$$R_b=(K_{ftg}m_{plastic}) / M_{allow\text{-}ultimate}$$ **Equation 5.3.1-25**

where
f_t is the applied tension stress (psi)
F_{tu} is the allowable ultimate tensile stress obtained from Reference 5-4 (psi)
$m_{plastic}$ is the applied moment calculated about the plastic axes (in-lbs) from Equation 5.3.1-23
$M_{allow\text{-}ultimate}$ is the ultimate allowable moment based on the modulus of rupture. (in-lbs)
K_{ftg} is the appropriate, program approved fitting factor. See Section 5.3.

Similarly, for yield analysis[1]

$$R_{t\text{-}yield}=K_{ftg}\bullet K_{yld}\bullet f_t/(1.5F_{ty})$$ **Equation 5.3.1-26**

$$R_{b\text{-}yield} = K_{ftg}\bullet K_{yld}\bullet m_{plastic}/(1.5M_{allow\text{-}yield})$$ **Equation 5.3.1-27**

where
f_t is the applied tension stress (psi)
F_{ty} is the allowable yield tensile stress obtained from Reference 5-4 (psi)
$m_{plastic}$ is the applied moment calculated about the plastic axes from Equation 5.3.1-23 (in-lbs)
$M_{allow\text{-}yield}$ is the yield allowable moment based on the modulus of bending (in-lbs)
K_{ftg} is the program approved fitting factor. (See Section 5.3)
K_{yld} is the yield factor (See Section 5.3)

The margin of safety is determined from Section 6.3.6.1, PM4057 where the interaction exponent, r, is determined based on K_{geom} and the material plasticity, γ. The steps are summarized without discussion in Table **5.3.1-4**, along with the reference location of the development of the method. See referenced section for further information. Section 5.3.1.5.2 will provide an example of this type of analysis.

[1] Some programs require the use of a fitting factor at limit load. Others may require detrimental deformation checks to be performed at some percent of limit load. These equations should be adjusted appropriately, using K_{yld} and K_{ftg}. See Section 5.3. Typically for bending stress in the walls, use of F_{ty} for this check is very conservative as local yielding is not detrimental; as result, use of the yield bending modulus is strongly recommended.

Copyright 2017 Lockheed Martin Corporation.
Note: The current version is always the version on the Lockheed Martin network.

Table 5.3.1-4 Calculating Combined Tension and Plastic Bending Margin of Safety for Channel Fitting

Calculate	Equation/Graph	Source
Material Plasticity Factor	$\gamma=(mc/I)_{b,k=2.0} / F_{tu} - 1$	Equation 6.3.6-4, Section 6, PM4057
Calculate K_{geom} : dependent upon whether plasticity is used or not. Requires calculation of c and Q for each subsection. For bending modulus based analysis, calculation is made about y_{pna}.	$K_{geom} = Ac/(2Q)$ where Q and C are from the subsection where the bending stresses are of opposite sign to the axial stresses and A is the area of the entire section.	Equation 6.3.6-5, Section 6, PM4057
Interaction Exponent, r	$r = [(K_{geom}-1)\gamma/1.1]+1$ when $K_{geom} \leq 2.14$ $r = [(K_{geom}+2)\gamma/4.0]+1$ when $K_{geom} > 2.14$	Figure 6.3.6-1, Section 6, PM4057
Obtain $R_{t\text{-allow}}$ or $R_{b\text{-allow}}$	using R_t,R_b,r	Figure 6.3.6-2, Section 6, PM4057
Calculate Ultimate M.S. based on bending modulus of rupture	$M.S. = R_{b\text{-ALLOW}}/(R_b)-1$ OR $M.S. = R_{t\text{-ALLOW}}/(R_t)-1$	Equation 6.3.6-7, Section 6, PM4057
Calculate Yield M.S. based on yield bending modulus	$M.S. = R_{b\text{-ALLOW}}/R_{b\text{-yield}}-1$ OR $M.S. = R_{t\text{-ALLOW}}/R_{t\text{-yield}}-1$	Equation 6.3.6-7, Section 6, PM4057

If a plastic analysis is not desired due to programmatic or customer direction or if it is desirable to conservatively use F_{tu} and F_{ty} rather than the modulus of bending, M_{allow} can be calculated from Equation 5.3.1-6 and 5.3.1-7 where I and c are given by Equations 5.3.1-20 and 5.3.1-21. The tension and bending stress ratios are determined from the following

$$R_t = (K_{ftg} f_t)/F_{tu}$$ **Ultimate**

$$R_b = (K_{ftg}\, m_{appl})/M_{allow\text{-}ult}$$ **Equation 5.3.1-28**

$$R_{t\text{-}yield} = K_{ftg} \bullet K_{yld} \bullet f_t/(1.5F_{ty})$$ **Yield**

$$R_{b\text{-}yield} = K_{ftg} \bullet K_{yld} \bullet m_{appl}/(1.5M_{allow\text{-}yield})$$ **Equation 5.3.1-29**

where
1.5 is the limit to ultimate factor
f_t is the tensile stress calculated in **Equation 5.3.1-19**(psi)
$M_{allow\text{-}ult}$ is the allowable moment based on F_{tu} (in-lb)
$M_{allow\text{-}yield}$ is the yield allowable moment based on F_{ty} (in-lb)
m_{appl} is the applied moment calculate in Equation 5.3.1-22
K_{ftg} is the program approved fitting factor. (See Section 5.3)
K_{yld} is the yield factor (See Section 5.3)

Thus, the margins of safety can be written as

$$M.S.\ (ULT) = 1/(R_b+R_t) -1$$ **Equation 5.3.1-30**

$$M.S.\ (Yield) = 1/(R_{b\text{-}yield}+R_{t\text{-}yield})-1$$

where
R_b is the bending stress ratio calculated in Equation 5.3.1-28
R_t is the tension stress ratio calculated in Equation 5.3.1-28
$R_{b\text{-yield}}$ is the bending stress ratio calculated in Equation 5.3.1-29
$R_{t\text{-yield}}$ is the tension stress ratio calculated in Equation 5.3.1-29

Copyright 2017 Lockheed Martin Corporation.
Note: The current version is always the version on the Lockheed Martin network.

5.3.1.2.2 Channel Fitting End-pad Analysis

The remaining item to analyze in the channel fitting is the end-pad. The end-pad is subjected to bending as the fastener load is transferred to the walls to be sheared into adjacent structure. It is also subject to shear pull-through loading with the application of the fastener tension load.

If the channel fitting is made from thick aluminum plate, the analyst needs to use caution when orienting the part within the plate. The critical area of the channel fitting is the end-pad and this should be oriented, if at all possible, in the L or LT direction as shown in Figure 5.3.1-3.

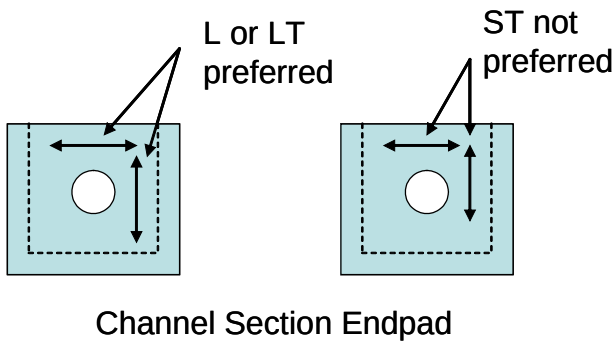

Figure 5.3.1-4 Preferred Material Grain Direction in Thick Aluminum Plate

A preferred alternative to thick plate would be to use extruded or forged bar stock. Neither of these alternatives is generally possible if the fitting is integrally machined into a larger structure.
Because the orientation of the critical stress is dependent on the aspect ratio of the fitting, always use the lowest material property allowables associated with the end-pad material directions for margin calculations.

The derivation of the end-pad bending stress equations is provided in FZM8880, Reference 5-17, and will not be repeated here. It is a combination of classical plate bending theory which has been adjusted to more closely correlate with testing. Thus, the stress at the center of end-pad is given by

$$f_{b\text{-}end\text{-}pad} = 0.65 K_r K_a K_e P/t_e^2$$ **Equation 5.3.1-31**

$$K_r = 2.2 - 12.8833(r_i/h) + 44.41667(r_i/h)^2 - 81.6667(r_i/h)^3 + 58.3333(r_i/h)^4$$

$$K_a = [1.14(r_i/a) + 0.062][b/a - 1]^{0.47} + 1$$

$$K_e = [2(d - t_b/2)]/h$$

where
K_r accounts for the variation in the load application area.[1]
K_a accounts for the variation in the aspect ratio of the end-pad
K_e accounts for the eccentricity in load application area
P is the bolt load (lbs).
t_e is the end-pad thickness (in).
0.65 is an empirical factor resulting from test correlation.
r_i is the radius of the end-pad bolt hole (in).
h is the height of the end-pad from the free edge to the mid-plane of the base (in).
a is the minimum of [(height of the end-pad from the free edge to the mid-plane of the base) OR (width of the end-pad from the mid-plane of the walls)]. (in)

[1] The equation given for K_r is valid only for $r_i/h \leq 0.50$.

Copyright 2017 Lockheed Martin Corporation.
Note: The current version is always the version on the Lockheed Martin network.

b is the maximum of [(height of the end-pad from the free edge to the mid-plane of the base) OR (width of the end-pad from the mid-plane of the walls)]. (in)
d is the distance from the center of the hole to the base of the fitting end-pad. (in)

Prior to using the stresses calculated by Equation 5.3.1-31 for a durability or damage tolerance analysis, the analyst needs to understand the source of the equations. Unlike the bathtub fitting equations, the factor, K_r, does not include the effects of a hole in the end-pad; thus, this is a gross stress calculation. While this correlates well to test data for a static analysis, a different approach might be necessary for fatigue or damage tolerance analysis. See Reference 5-17 for the derivation.

Unlike the semicircular bathtub fitting, there is no factor to account for fixity. Studies have shown that unless t_e/t_w <1, the wall provides very little fixity beyond simple support. Per guidance in Section 5.3, t_e is greater than t_w.

The allowable used in the margin of safety Calculation is based on the method outlined for plastic bending analysis in Section 6.3 for a symmetric rectangular section. Thus, using k=1.5 since the end-pad is a rectangular section, Section 6.3.2 is used to determine $M_{allow\text{-}ultimate}$ and Section 6.3.2.1 is used to determine $M_{allow\text{-}yield}$.

The margin of safety at ultimate is then calculated from

$$M.S.(end\text{-}pad) = F_{tu} /(K_{ftg}\, f_{b\text{-}end\text{-}pad}) - 1 \quad \textbf{ULTIMATE or}$$
$$M.S.(end\text{-}pad) = (mc/I)_b/(K_{ftg}\, f_{b\text{-}end\text{-}pad}) - 1 \quad \textbf{ULTIMATE – PLASTIC}$$

Equation 5.3.1-32

where
F_{tu} is the ultimate allowable tension stress from Reference 5-4 or other suitable reference (psi).
$(mc/I)_b$ is the bending modulus of rupture calculated per Equation 6.3.2-2, PM4057 (psi).
$f_{b\text{-}end\text{-}pad}$ is the end-pad bending stress from **Equation 5.3.1-31** (psi).
K_{ftg} is the appropriate, program approved joint factor. (See Discussion, Section 5.3).

The margins of safety at yield[1] are given by

$$M.S.(end\text{-}pad) = 1.5F_{ty} / (K_{yld}\bullet K_{ftg}\bullet f_{b\text{-}end\text{-}pad}) - 1 \quad \textbf{YIELD or}$$
$$M.S.(end\text{-}pad) =1.5(mc/I)_{b\text{-}yield} / (K_{yld}\bullet K_{ftg}\bullet f_{b\text{-}end\text{-}pad}) - 1 \quad \textbf{YIELD - PLASTIC}$$

Equation 5.3.1-33

where
F_{ty} is the yield allowable tension stress from Reference 5-4 or other suitable reference (psi).
$(mc/I)_b$ is the bending modulus calculated per Section 6.3.2.1, PM4057 (psi).
$f_{b\text{-}end\text{-}pad}$ is the end-pad bending stress from Equation 5.3.1-31 (psi).

The shear in the end-pad is a check of fastener pull-through where the shear stress is given by

$$f_s=P/(2\pi r_{bolt\text{-}o} t_e)$$

Equation 5.3.1-34

where
P is the bolt load (lbs).
$r_{bolt\text{-}o}$ is the radius of the bolt head or steel tension washer (in).
t_e is the end-pad thickness (in).

The margin of safety is given by

$$M.S.\ (shear) = F_{su}/(K_{ftg}\, f_s) - 1$$

Equation 5.3.1-35

[1] Some programs require the use of a fitting factor at limit load. Others may require detrimental deformation checks to be performed at some percent of limit load. These equations should be adjusted appropriately using K_{yld} and K_{ftg}. See Section 5.3. Typically for bending stress in the walls, use of F_{ty} for this check is very conservative as local yielding is not detrimental; as result, use of the yield bending modulus is strongly recommended.

Copyright 2017 Lockheed Martin Corporation.
Note: The current version is always the version on the Lockheed Martin network.

where
F_{su} is the allowable ultimate shear stress obtained from Reference 5-4 (psi)
K_{ftg} is the appropriate, program approved joint factor. (See Discussion, Section 5.3).
f_s is the applied shear stress (psi)

An example channel fitting analysis is provided in Section 5.3.1.5-2. The software tool IDAT/Fitting will perform analysis of channel fittings per this section.

5.3.1.3 Angle Fitting

Typical angle fitting geometry is shown in Figure 5.3.1-5. This type of fitting is often integrally machined into a larger structure like a rib or spar although it can be mechanically attached through its two walls to back-up structure. Similar assumptions on wall thickness as were described in Figure 5.3.1-2 for channel fittings would be used if the angle fitting shared a wall with an adjacent fitting.

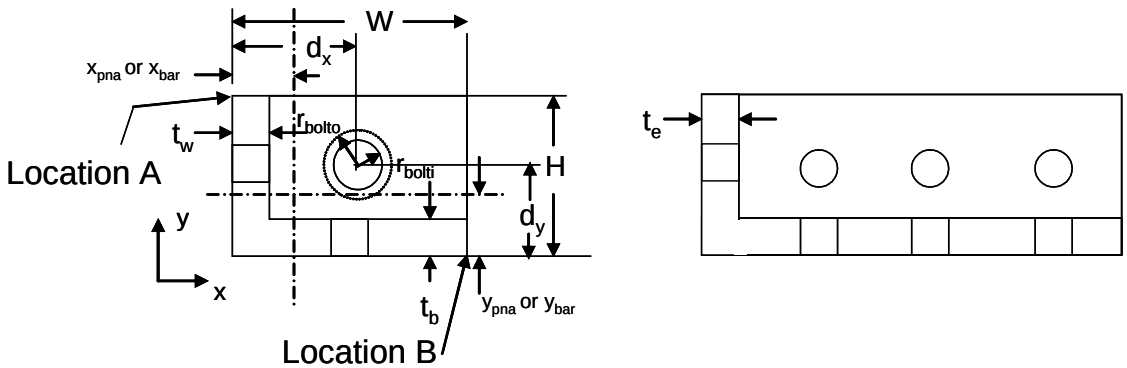

Figure 5.3.1-5 Typical Geometry, Angle Fitting

A channel fitting is preferred over this type of fitting because an angle fitting is much less efficient due to the loss of support to the end-pad along one edge. A derivation of the approach for the calculation of the end-pad stresses and limited available test data for this type of fitting are also included in FZM8880, Reference 5-17. The angle fitting analysis is a combination of classical checks using the angle section for the wall analysis and a methodology which develops an effective semicircular cross-section for the end-pad analysis. A summary of the parameter limitations for this analysis is given in Table 5.3.1-5.

Table 5.3.1-5 Parameter Limitations for Angle Fittings

$(H-t_b/2)/t_w \leq 7$ and $(W-t_w/2)/t_b \leq 7$
$t_e \geq t_w$ at intersection, t_w may taper away from end-pad
$t_e / D_{bolt} \geq 1.0$ *(recommended)*
$e/D_{bolt} \geq 1.74$ AND entire fastener head or washer surface must lie on end-pad.
If shear load is being transferred by the fastener, $e/D \geq 2.0$
Ratio of the longer leg to the shorter leg ≤ 2.0

5.3.1.3.1 Angle Fitting Wall Analysis

The wall analysis is a classical axial plus bending calculation of stress which is then combined using the methodology outlined in Section 6.3.6 of this manual. It is analyzed as an equivalent semicircular bathtub fitting as shown in Figure 5.3.1-6. The equivalent radius, R_a, end distance, e, and area, A, are given by

$$R_a=(h+w)/\pi \qquad \textbf{Equation 5.3.1-36}$$

$$e=R_a-[(d_y-t_b/2)+(d_x-t_w/2)]/2.0 \qquad \textbf{Equation 5.3.1-37}$$

Copyright 2017 Lockheed Martin Corporation.
Note: The current version is always the version on the Lockheed Martin network.

$$A=\pi R_a(t_w+t_b)/2$$ **Equation 5.3.1-38**

where
h is the height of the angle fitting from the free edge to the mid-plane of the base at the critical wall section. ($h=H_{wall}-t_b/2$)(in)
w is the width of the angle fitting from the free edge to the mid-plane of the wall at the critical wall section. ($w=W_{wall}-t_w/2$) (in)
d_y is the distance from the base to the center of the hole (Reference Figure 5.3.1-5). (in)
d_x is the distance from the wall to the center of the hole (Reference Figure 5.3.1-5). (in)
t_w is the wall thickness (in)
t_b is the base thickness (in)

Note that this equivalent end distance does not have to adhere to the normal e/D requirements of joints as it is a convenience for the calculation of the equivalent fitting's stresses. The actual end distance in the x and y directions on the part are recommended to be greater than or equal to 2 times the fastener diameter.

If the angle fitting is not integral to a larger structure, it is generally attached along the walls. If this is the case, a net section factor must be calculated per Section 5.2.3.2.
The stress is given by

$$f_t = P/(\eta A)$$ **Equation 5.3.1-39**

where
P is the applied bolt tension load (lbs)
A is the area of the angle section given in Equation 5.3.1-38.
η is the net section factor which can be calculated from Section 5.2.3.2

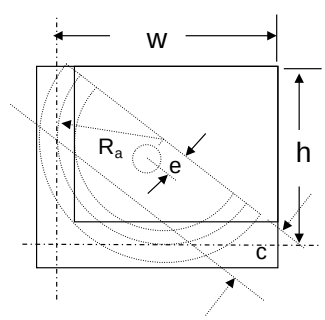

Figure 5.3.1-6 Angle Fitting Geometry and Idealization for Analysis

The centroid and moment of inertia are derived from a thin semicircular shell[1] and are given by

$$c = 0.637R_a$$ **Equation 5.3.1-40**

$$I = 0.298\, R_a^3(t_w+t_b)/2$$ **Equation 5.3.1-41**

where
R_a is the equivalent radius given by Equation 5.3.1-36.(in)
t_w is the thickness of the wall (in)
t_b is the thickness of the base (in)

And the applied moment is calculated from

$$m_{plastic}=P[c-e]$$ **Equation 5.3.1-42**

where
P is the applied bolt load (lbs)
e is the end distance of the equivalent semicircle given by Equation 5.3.1-37. (in)

[1] Reference 5-2, pg. 2.1.5

Copyright 2017 Lockheed Martin Corporation.
Note: The current version is always the version on the Lockheed Martin network.

c is the centroid distance given by Equation 5.3.1-40. (in)

Note that a positive moment will put the free flanges in tension. This is an unsymmetrical section; however, a 1954 review of the test data determined that the modulus of rupture could be calculated for the semicircular section with sufficient accuracy using a symmetric section with a section factor, k, of 1.698, [1] the section factor associated with a solid round tube. Thus, Section 6.3.2 can be used to determine $M_{allow-ultimate}$ and Section 6.3.2.1 can be used to determine $M_{allow-yield}$.

It is assumed that buckling or crippling of the walls is not an issue and the b/t for crippling calculations is less than 7.0. If this is not the case, then the allowable bending moments should include the crippling cutoffs per Section 6.3.4 of this manual.

Once the allowable moments have been calculated, from Section 6.3.2 for a fully plastic analysis, the tension and bending stress ratios are determined for ultimate analysis from

$$R_t=(K_{ftg}\, f_t) / F_{tu} \qquad \textbf{Equation 5.3.1-43}$$

$$R_b=(K_{ftg}\, m_{plastic})/ M_{allow-ultimate} \qquad \textbf{Equation 5.3.1-44}$$

where

f_t is the applied tension stress (psi)

F_{tu} is the allowable ultimate tensile stress obtained from Reference 5-4 (psi)

$m_{plastic}$ is the applied moment (in-lbs)

$M_{allow-ultimate}$ is the ultimate allowable moment based on the modulus of rupture from Section 6.3.2. (in-lbs)

K_{ftg} is the appropriate, program approved fitting factor. See Section 5.3.

Then, for yield analysis[2]

$$R_{t-yield}= K_{ftg}\bullet K_{yld}\bullet f_t/(1.5F_{ty}) \qquad \textbf{Equation 5.3.1-45}$$

$$R_{b-yield}= K_{ftg}\bullet K_{yld}\bullet m_{appl}/(1.5M_{allow-yield}) \qquad \textbf{Equation 5.3.1-46}$$

where

f_t is the applied tension stress (psi)

F_{ty} is the allowable yield tensile stress obtained from Reference 5-4 (psi)

m_{appl} is the applied moment (in-lbs)

$M_{allow-yield}$ is the allowable moment based on the yield modulus of bending from Section 6.3.2.1. (in-lbs)

K_{ftg} is the program approved fitting factor. (See Section 5.3)

K_{yld} is the yield factor (See Section 5.3)

As with the semicircular bathtub fitting, the margin of safety is determined from Section 6.3.6.1, PM4057, where the interaction exponent, r, is determined for K_{geom} of a solid round cylinder. The appropriate, program approved fitting factor, K_{ftg}, would be applied to the applied stress ratio in this calculation. The steps are summarized without discussion in Table 5.3.1-6**,** along with the reference location for the development of the method. See referenced section for further information. Section 5.3.1.5 provides an example of this type of analysis.

[1] Unpublished supplement to LR2072, Reference 5-13.

[2] Some programs require the use of a fitting factor at limit load. Others may require detrimental deformation checks to be performed at some percent of limit load. These equations should be adjusted appropriately using K_{yld} and K_{ftg}. See Section 5.3. Typically for bending stress in the walls, use of F_{ty} for this check is very conservative as local yielding is not detrimental; as result, use of the yield bending modulus is strongly recommended.

Copyright 2017 Lockheed Martin Corporation.
Note: The current version is always the version on the Lockheed Martin network.

Table 5.3.1-6 Calculating Combined Tension and Plastic Bending Margin of Safety for Angle Fitting

Calculate	Equation/Graph	Source
Material Plasticity Factor	$\gamma=(mc/I)_{b,k=2.0} / F_{tu} - 1$	Equation 6.3.6-4, Section 6, PM4057
K_{geom}	2.36 (Solid Round Cylinder)	Figure 6.3.6-1, Section 6, PM4057
Interaction Exponent, r	$r = [(K_{geom}+2)\gamma/4.0]+1$ when $K_{geom} > 2.14$	Figure 6.3.6-1, Section 6, PM4057
Obtain $R_{t\text{-allow}}$ or $R_{b\text{-allow}}$	using R_t,R_b,r	Figure 6.3.6-2, Section 6, PM4057
Calculate Ultimate M.S. – Based on modulus of rupture	M.S. = $R_{b\text{-ALLOW}} / R_b$-1 OR M.S. = $R_{t\text{-ALLOW}} / R_t$ -1	Equation 6.3.6-7, Section 6, PM4057
Calculate Yield M.S. – Based on yield bending modulus	M.S. = $R_{b\text{-ALLOW}}/R_{b\text{-yield}}$-1 OR M.S. = $R_{t\text{-ALLOW}}/R_{t\text{-yield}}$-1	Equation 6.3.6-7, Section 6, PM4057

If an analysis based on modulus of rupture is not desired due to programmatic or customer direction, then a classical P/A + mc/I calculation of stress using the section properties of an angle must be performed. The area is given by

$$A=W_{base}\, t_b + (H_{wall}-t_b)\, t_w + (1-\pi/4)R^2_{fillet}$$ **Equation 5.3.1-47**

where
H_{wall} is the total height of the angle fitting at the critical wall section. (in)
W_{base} is the total width of the angle fitting at the critical wall section. (in)
t_w is the wall thickness (in)
t_b is the base thickness (in)
R_{fillet} is the fillet radius at the intersection of the wall and the base (in)

If the angle fitting is not integral to a larger structure, it is generally attached along the walls. If this is the case, a net section factor must be calculated per Section 5.2.3.2

$$f_t = P/(\eta A)$$ **Equation 5.3.1-48**

where
P is the applied bolt tension load (lbs)
A is the area of the angle section given in Equation 5.3.1-47
η is the net section factor which can be calculated from Section 5.2.3.2

Because it is unlikely that the end-pad fastener, where the load is applied, is located on the x or y centroid axes, bending about both axes must be examined. For an angle section the moments of inertia and the centroids are found as follows

$$x_{bar} = [W_{base}^2 t_b+(H_{wall}-t_b)t_w^2] / \{2[W_{base}\, t_b+(H_{wall}-t_b)t_w]\}$$ **Equation 5.3.1-49**

$$y_{bar} = [H_{wall}^2 t_w+(W_{base} -t_w)t_b^2] / \{2[H_{wall}t_w+(W_{base} -t_w)t_b]\}$$ **Equation 5.3.1-50**

$$I_{xx}=1/3[t_w H_{wall}^3+(W_{base} -t_w)t_b^3]-Ay_{bar}^2$$ **Equation 5.3.1-51**

$$I_{yy}=1/3[t_b\, W_{base}^3+(H_{wall}-t_b)t_w^3]-Ax_{bar}^2$$ **Equation 5.3.1-52**

where
W_{base} is the total width of the angle fitting at the critical wall section. (in)
H_{wall} is the total height of the angle fitting at the critical wall section. (in)
t_b is the thickness of the base (in)
t_w is the thickness of the wall (in)
A is the area given by Equation 5.3.1-47. in^2

If more accurate values are available from CATIA and CADAM, they may be used.

Copyright 2017 Lockheed Martin Corporation.
Note: The current version is always the version on the Lockheed Martin network.

Note Equations 5.3.1-49 through 5.3.1-52 are used only for calculations which **do not** take advantage of the material plasticity. Once the locations of the centroids are found, the applied moments can be calculated using the location for the end-pad bolt as shown in **Figure 5.3.1-5** from

$$m_{appl\text{-}xx}=P[d_y-y_{bar}] \qquad \textbf{Equation 5.3.1-53}$$

$$m_{appl\text{-}yy}=P[d_x-x_{bar}] \qquad \textbf{Equation 5.3.1-54}$$

where
P is the applied bolt load (lbs)
H is the height of the angle fitting (in)
B is the width of the fitting (in)
x_{bar} is the location of the elastic centroid axis about y-y (in)
y_{bar} is the location of the elastic centroid axis about x-x (in)
d_x is the distance from the center of the hole to the wall edge of the part in the x direction (in)
d_y is the distance from the center of the hole to the wall edge of the part in the y direction (in).

The sign convention is such that for positive $m_{appl\text{-}x}$, Location A is in tension. Similarly for positive $m_{appl\text{-}y}$, Location B is in tension. It is assumed that buckling or crippling of the walls is not an issue and the b/t for crippling calculations is less than 7.0. If this is not the case, then the allowable bending moments should include the crippling cutoffs from Section 8.4
The resulting total bending stresses must be calculated for each of the outstanding flanges to determine the most critical. The stresses are calculated from

$$f_{b\text{-}wall\ edge} = m_{appl\text{-}xx}\,(H-y_{bar})/I_{xx} - m_{appl\text{-}yy}\,x_{bar}/I_{yy} \quad \text{(Location A)} \qquad \textbf{Equation 5.3.1-55}$$

$$f_{\text{-}base\ edge} = -m_{appl\text{-}xx}\,y_{bar}/I_{xx} + m_{appl\text{-}yy}\,(W-x_{bar})/I_{yy} \quad \text{(Location B)}$$

where
$m_{appl\text{-}xx}$ is the moment applied about the x-x axis
$m_{appl\text{-}yy}$ is the moment applied about the y-y axis
H is the total height of the fitting wall at the critical section (in).
W is the total width of the fitting bases at the critical section (in).
x_{bar} is the geometric centroid (in) given by Equation 5.3.1-49.
y_{bar} is the geometric centroid (in) given by Equation 5.3.1-50.
I_{xx} is the moment of inertia about the x axis given by Equation 5.3.1-51. (in^4)
I_{yy} is the moment of inertia about the y axis given by. Equation 5.3.1-52 (in^4)
Location A and B are shown in **Figure 5.3.1-5**

The tension and bending stress ratios are determined from the following[1]

Ultimate

$$R_t = (K_{ftg} f_t)/F_{tu}$$

$$R_b = K_{ftg} \bullet maximum[f_{b\text{-}wall\ edge}, f_{b\text{-}base\ edge}]/F_{tu} \qquad \textbf{Equation 5.3.1-56}$$

Yield

$$R_{t\text{-}yield} = K_{ftg} \bullet K_{yld} \bullet f_t/(1.5F_{ty})$$

$$R_{b\text{-}yield} = K_{ftg} \bullet K_{yld} \bullet maximum[f_{b\text{-}wall\ edge}), f_{b\text{-}base\ edge}]/(1.5F_{ty}) \qquad \textbf{Equation 5.3.1-57}$$

where
1.5 is the limit to ultimate factor
f_t is the tensile stress calculated in Equation 5.3.1-48(psi)
$f_{b\text{-}wall\ edge}$ is the bending stress calculated in Equation 5.3.1-55(psi)
$f_{b\text{-}base\ edge}$ is the bending stress calculated in Equation 5.3.1-55 (psi)
F_{tu} is the allowable ultimate tensile stress obtained from Reference 5-4 (psi)
F_{ty} is the allowable yield tensile stress obtained from Reference 5-4 (psi)

---

[1] Some programs require the use of a fitting factor at limit load. Others may require detrimental deformation checks to be performed at some percent of limit load. These equations should be adjusted appropriately using K_{yld} and K_{ftg}. See Section 5.3. Typically for bending stress in the walls, use of F_{ty} for this check is very conservative as local yielding is not detrimental; as result, use of the yield bending modulus is strongly recommended.

Copyright 2017 Lockheed Martin Corporation.
Note: The current version is always the version on the Lockheed Martin network.

K_{ftg} is the program approved fitting factor. (See Section 5.3)
K_{yld} is the yield factor (See Section 5.3)

In this case, stresses are used to develop the stress ratios rather than loads or moments because of the bending about both axes. The margins of safety can be written as

$$M.S.\ (ULT) = 1/(R_b+R_t)-1 \qquad \textbf{Equation 5.3.1-58}$$
$$M.S.\ (Yield) = 1/(R_{b\text{-}yield}+R_{t\text{-}yield})-1$$

where
R_b and R_t are the bending stress and axial stress ratios calculated in Equation 5.3.1-56, respectively
$R_{b\text{-}yield}$ and $R_{t\text{-}yield}$ are the bending stress and axial stress ratios calculated in Equation 5.3.1-57, respectively

5.3.1.3.2 Angle Fitting End-pad Analysis

The remaining item to analyze in the angle fitting is the end-pad. The end-pad is subjected to bending as the fastener load is transferred to the walls to be sheared into adjacent structure. It is also subject to shear loading with the application of the fastener load. As with the wall analysis, the end-pad analysis of this type of fitting is idealized as an equivalent semicircular fitting. FZM8880, Reference 5-17, discusses the limited test data and the approach of utilizing the same method as for a semicircular bathtub. Figure 5.3.1-6 illustrates how this idealization is done and defines the equivalent fitting terms for this analysis.
If the angle fitting is made from thick aluminum plate, the analyst needs to use caution when orienting the part within the plate. The critical area of the angle fitting is the end-pad and this should be oriented, if all possible, in the LT direction. A preferred alternative to thick plate would be to use extruded or forged bar stock. Neither of these alternatives is generally possible if the fitting is integrally machined into a larger structure.

Because the orientation of the critical stress is unknown, always use the lowest material property allowables associated with the end-pad material directions for margin calculations.

An equivalent average radius, R_a, is calculated using the centerline lengths of the two walls. This method is valid for $h/w \leq 2.0$ or $w/h \leq 2.0$. In addition, an equivalent end distance, e, is calculated. These are the same equations used for the calculation of the equivalent radius and end distance for the wall analysis except in this case the height and width are at the end-pad. This may be the same at the previous calculation if the wall and base do not taper.

$$R_a=(h+w)/\pi \qquad \textbf{Equation 5.3.1-59}$$
$$e=R_a-[(d_y-t_b/2)+(d_x-t_w/2)]/2.0 \qquad \textbf{Equation 5.3.1-60}$$

where
h is the height of the angle fitting from the free edge to the mid-plane of the base at the end-pad. ($h=H_{end}-t_b/2$)(in).
w is the width of the angle fitting from the free edge to the mid-plane of the wall at the end-pad. ($w=W_{end}-t_w/2$) (in).
d_y is the distance from the base to the center of the hole (Reference **Figure 5.3.1-5**) (in).
d_x is the distance from the wall to the center of the hole (Reference **Figure 5.3.1-5**) (in).
t_w is the wall thickness (in).
t_b is the base thickness (in).

Thus, the stress at the center of end-pad is given by **Equation 5.3.1-13** using equations **Equation 5.3.1-59** for R_a and **Equation 5.3.1-60** for e.

Because of limited static test data, the extrapolation of this approach for use in the calculation of stresses for a durability or damage tolerance analysis is not recommended.

The allowable used in the margin of safety calculation is based on the method outlined for plastic bending analysis in Section 6.3 for a symmetric rectangular section. Thus, using k=1.5, Section 6.3.2 is used to

Copyright 2017 Lockheed Martin Corporation.
Note: The current version is always the version on the Lockheed Martin network.

determine $M_{allow\text{-}ultimate}$ and Section 6.3.2.1 is used to determine $M_{allow\text{-}yield}$. The margin of safety at ultimate is then calculated from

$$M.S.(end\text{-}pad) = F_{tu} /(K_{ftg}\, f_{b\text{-}end\text{-}pad}) - 1 \quad \textbf{ULTIMATE or} \qquad \textbf{Equation 5.3.1-61}$$

$$M.S.(end\text{-}pad) = (mc/I)_b/(K_{ftg}\, f_{b\text{-}end\text{-}pad}) - 1 \quad \textbf{ULTIMATE - PLASTIC}$$

where
F_{tu} is the ultimate allowable tension stress from Reference 5-4 or other suitable reference (psi).
$(mc/I)_b$ is the bending modulus of rupture calculated per Equation 6.3.2-2, PM4057 (psi).
$f_{b\text{-}end\text{-}pad}$ is the end-pad bending stress from **Equation 5.3.1-13** (psi).
K_{ftg} is the appropriate, program approved joint factor (See Discussion, Section 5.3).

The margin of safety at yield[1] is given by

$$M.S.(end\text{-}pad) = 1.5F_{ty} / (K_{ftg} \bullet K_{yld} \bullet f_{b\text{-}end\text{-}pad}) - 1 \quad \textbf{YIELD or} \qquad \textbf{Equation 5.3.1-62}$$

$$M.S.(end\text{-}pad) = 1.5(mc/I)_{b\text{-}yield} / (K_{ftg} \bullet K_{yld} \bullet f_{b\text{-}end\text{-}pad}) - 1 \quad \textbf{YIELD- PLASTIC}$$

where
1.5 is the limit to ultimate factor
F_{ty} is the yield allowable tension stress from Reference 5-4 or other suitable reference (psi)
$(mc/I)_b$ is the yield bending modulus calculated per Section 6.3.2.1, PM4057 (psi)
$f_{b\text{-}end\text{-}pad}$ is the end-pad bending stress from **Equation 5.3.1-13** (psi)
K_{yld} is the yield factor (See Section 5.3)

The shear in the end-pad is due to fastener pull-through where the shear stress is given by

$$f_s = P/(2\pi r_o t_e) \qquad \textbf{Equation 5.3.1-63}$$

where
P is the bolt load (lbs).
r_o is the radius of the bolt head or steel tension washer(in).
t_e is the end-pad thickness (in).

The margin of safety is given by

$$M.S.\ (shear) = F_{su}/(K_{ftg} f_s) - 1 \qquad \textbf{Equation 5.3.1-64}$$

where
F_{su} is the allowable ultimate shear stress obtained from Reference 5-4 (psi)
f_s is the applied shear stress (psi).

5.3.1.4 Pi Fitting Analysis

The final fitting to be discussed in the bathtub fitting analysis section is the Pi fitting, so named because of its shape. This is the least desirable of the bathtub fittings because there is no common web to stabilize the tension flange or the outstanding legs. As a result it can have in-service fatigue issues due to working the intersection of the flange with the leg.

Typical Pi fitting geometry is shown in **Figure 5.3.1-7**. The analysis is based on classical beam theory and straightforward axial plus bending stresses.

[1] Some programs require the use of a fitting factor at limit load. Others may require yield checks to be performed at some percent of limit load. These equations should be adjusted appropriately using K_{yld} and K_{ftg}. See Section 5.3

Copyright 2017 Lockheed Martin Corporation.
Note: The current version is always the version on the Lockheed Martin network.

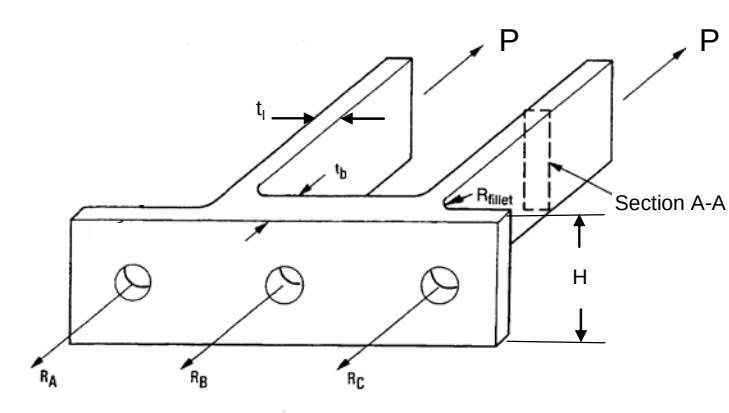

Figure 5.3.1-7 Typical Pi fitting Geometry

5.3.1.4.1 Pi Fitting Wall Analysis

The wall analysis is a classical calculation of stress. It is assumed that the legs have the same cross-section. In order to minimize eccentricities and uneven loading they should be very similar. The wall area is given by

$$A=Ht_l \qquad \textbf{Equation 5.3.1-65}$$

where
H is the height of the PI fitting leg (in)
t_l is the thickness of the leg (in)

The Pi fitting is generally attached along the outstanding legs. Thus, net section factor must be calculated per Section 5.2.3.2. The tension stress in the legs is given by

$$f_t = P/(\eta A) \qquad \textbf{Equation 5.3.1-66}$$

where
P is the load in each leg of the Pi fitting (lbs).
A is the area of each leg section given in **Equation 5.3.1-65** (in^2).
η is the net section factor which can be calculated from Section 5.2.3.2

The margins of safety are written as

$$M.S.\ (ULT) = F_{tu}/(K_{ftg}\ f_t)-1 \qquad \textbf{Equation 5.3.1-67}$$

$$M.S.\ (Yield)^1 = (1.5F_{ty})/(K_{ftg} \bullet K_{yld} \bullet f_t)-1$$

where
1.5 is the limit to ultimate factor
f_t is the applied tension stress from Equation 5.3.1-66.
F_{tu} is the ultimate allowable tension stress from Reference 5-4 or other suitable reference (psi).
F_{ty} is the yield allowable tension stress from Reference 5-4 or other suitable reference (psi).
K_{ftg} is the appropriate, program approved joint factor. (See Discussion, Section 5.3).
K_{yld} is the yield factor (See Section 5.3)

5.3.1.4.2 Pi Fitting End-pad Analysis

The derivation of the equations for Pi fitting end-pad analysis is given in Reference 5-17 and will not be repeated here. The equations are given for the general case of an unsymmetrical fitting in which the

[1] Some programs require the use of a fitting factor at limit load. Others may require yield checks to be performed at some percent of limit load. These equations should be adjusted appropriately using K_{yld} and K_{ftg}. See Section 5.3

Copyright 2017 Lockheed Martin Corporation.
Note: The current version is always the version on the Lockheed Martin network.

fasteners are located at different distances from the legs, however it is strongly recommended that fitting retain as much symmetry as possible to preclude secondary moments from causing un-accounted for stresses. The end-pads in all three bays of the fitting must be the same for the equations to be valid. In general, and in the case of a symmetric fitting, P_1 is equal to P_2. If a particular fitting being analyzed is not symmetric, then some other means, such as FEM analysis, of determining the distribution of the total load between the two legs must be used. Figure 5.3.1-8 illustrates the terms and geometry used in the calculations.

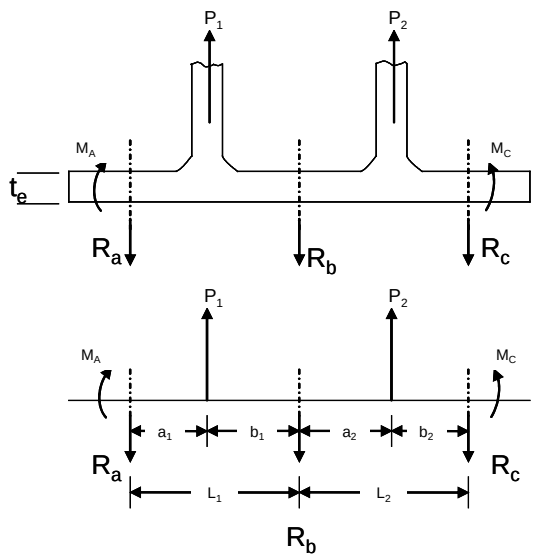

Figure 5.3.1-8 Pi Fitting End-pad Geometry

The method to develop the loads in the fasteners and end-pad and to calculate margins of safety is summarized in Figure 5.3.1-9. Each step will be described in more detail in the following section.

Copyright 2017 Lockheed Martin Corporation.
Note: The current version is always the version on the Lockheed Martin network.

1) Determine fixed end moment for a beam continuous over 3 supports.

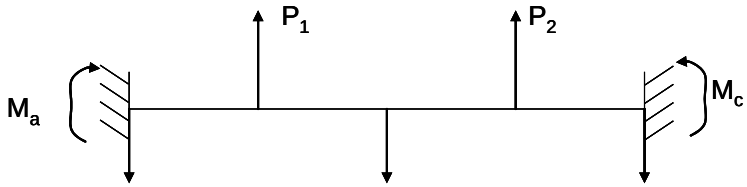

2) Assume 50% fixity for end moments and determine bolt loads: R_a, R_b and R_c.

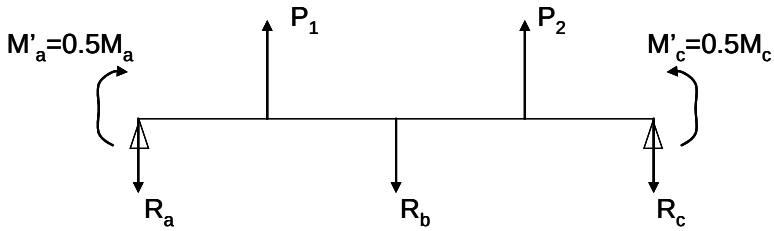

3) Assume center bolt load is distributed uniformly over head flat.

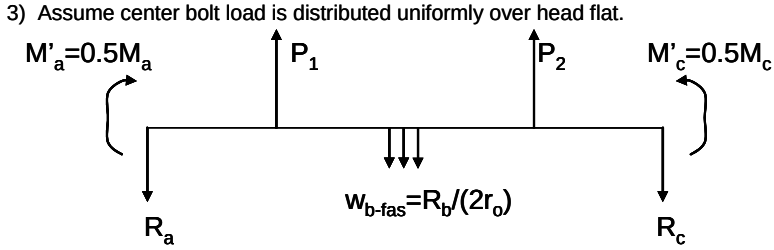

4) Construct bending moment diagram for end-pad

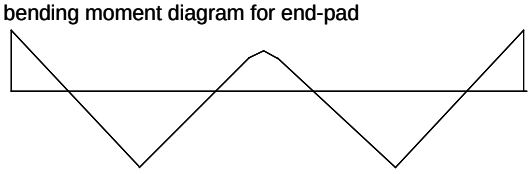

5) Calculate combined margin of safety for fasteners A and C using R_a and M_a and R_c and M_c, respectively.

6) Calculate the margin of safety for fastener B using R_b.

7) Calculate the margin for the end-pad at the critical location. Use net section at fastener holes and gross section elsewhere.

Figure 5.3.1-9 Sequence of Calculations for Analyzing Pi Fitting End-pad

Using a continuous beam analysis, the moment at fastener B is determined, assuming 100% fixity at fasteners A and C, from the following equation

$$M_b = \frac{\frac{P_1 a_1 (L_1^2 - a_1^2)}{L_1} - \frac{P_2 a_2 (L_2^2 - a_2^2)}{2L_2} - \frac{P_1 b_1 (L_1^2 - b_1^2)}{2L_1} + \frac{P_2 b_2 (L_2^2 - b_2^2)}{L_2}}{\frac{3L_1}{2} + \frac{3L_2}{2}}$$

Equation 5.3.1-68

where
P_1, P_2 is the load in the two legs of the Pi fitting (lbs).
L_1, L_2 is the total length of the span between fasteners (in).
a_1, b_1, a_2 and b_2 are the lengths between reactions (fasteners) and applied load (legs) as shown in Figure 5.3.1-8 (in).
Using M_b, M_a and M_c are calculated from

$$M_a=[P_1 b_1 (L_1^2-b_1^2)/(2L_1^2)]-M_b/2$$

Equation 5.3.1-69

Copyright 2017 Lockheed Martin Corporation.
Note: The current version is always the version on the Lockheed Martin network.

$$M_c=[P_2a_2(L_2^2-a_2^2)/(2L_2^2)]- M_b/2$$

where
P_1, P_2 is the load in the two legs of the Pi fitting (lbs).
L_1, L_2 is the total length of the span between fasteners (in).
b_1, a_2 are the lengths between reactions (fasteners) and applied load (legs) as shown in **Figure 5.3.1-8** (in).
M_b is the moment calculated at fastener B from (in-lb).

A review of the test data associated with this type of fitting determined that the assumptions of full fixity at Fasteners A and C was too conservative at A and C and un-conservative at Fastener B, therefore M_a and M_c are reduced to 50% fixity and M_b is recalculated using the following equation

$$M'_a= 0.50M_a$$
$$M'_c=0.50M_c \qquad \textbf{Equation 5.3.1-70}$$
$$M'_b=[P_1a_1(L_1^2-a_1^2)/(L_1)+ P_2b_2(L_2^2-b_2^2)/(L_2) - M'_aL_1 - M'_cL_2] / [2L_1+2L_2]$$

where
P_1, P_2 is the load in the two legs of the Pi fitting (lbs).
L_1, L_2 is the total length of the span between fasteners (in).
a_1, b_2 are the lengths between reactions (fasteners) and applied load (legs) as shown in **Figure 5.3.1-8** (in).
M_a, M_c are the moments calculated by **Equation 5.3.1-69** (in-lb).

Positive moments in the above equations are as shown in **Figure 5.3.1-8**. To calculate the loads at Fasteners A, B and C, the following equations are utilized

$$P_{fas\text{-}a} = R_a = P_1b_1/L_1+M'_a/L_1-M'_b/L_1$$
$$P_{fas\text{-}c}= R_c = P_2a_2/L_2+M'_c/L_2-M'_b/L_2 \qquad \textbf{Equation 5.3.1-71}$$
$$P_{fas\text{-}b} = R_b = P_1a_1/L_1+ P_2b_2/L_2 – M'_a/L_1 + M'_b/L_1 – M'_c/L_2 + M'_b/L_2$$

where
P_1, P_2 is the load in the two legs of the Pi fitting (lbs).
L_1, L_2 is the total length of the span between fasteners (in).
a_2, b_1 are the lengths between reactions (fasteners) and applied load (legs) as shown in **Figure 5.3.1-8** (in).
M'_a, M'_b and M'_c are the moments at 50% fixity calculated by **Equation 5.3.1-70** (in-lb).

Note that P_{fas} are loads in the fastener and if positive, the bolt is in tension.

Now, assume that the load at fastener B is distributed over the flat of the head. In the case where a steel washer or radius block is used, it may be taken into account. Calculating the distributed load at B

$$w_{b\text{-}fas}= P_{fas\text{-}b}/(2r_o) \qquad \textbf{Equation 5.3.1-72}$$

where
$P_{fas\text{-}b}$ is the bolt load in the central fastener (R_b) from **Equation 5.3.1-71** (lbs).
r_o is the radius of the bolt head or steel washer (in).

Using the summation of moments, working from the left end of the beam, a moment diagram is constructed. End-pad bending stresses are calculated for selected sections using a classical mc/I bending approach. This should be done, as a minimum, at the peak moment location using gross section properties and at the peak moment at a fastener location using net section properties.

These are compared to the allowable moment using the modulus of rupture as calculated from Section 6.3.2 for a rectangular section with k=1.5. Both an ultimate and yield check should be performed. If plastic bending analysis is not desired due to program or customer direction, F_{tu} and F_{ty} can be used for the allowable.

Copyright 2017 Lockheed Martin Corporation.
Note: The current version is always the version on the Lockheed Martin network.

The allowable moment based on F_{tu} and F_{ty} can be calculated from

$$M_{allow\text{-}ult} = F_{tu}(I/c)$$
$$M_{allow\text{-}yield} = F_{ty}(I/c)$$

Equation 5.3.1-73

where
F_{tu} is the ultimate allowable tension stress from Reference 5-4 or other suitable reference (psi)
F_{ty} is the yield allowable tension stress from Reference 5-4 or other suitable reference (psi)
I is the moment of inertia about the end-pad at the critical location (in^4)
c is the distance to the outer fiber from the centroid at the critical location (in)

The margin of safety at ultimate is then given by

$$M.S.(end\text{-}pad) = M_{allow\text{-}ult} /(K_{ftg} \cdot m_{max\text{-}end\text{-}pad}) - 1$$

Equation 5.3.1-74

where
$M_{allow\text{-}ult}$ is the allowable ultimate moment calculated from the bending modulus of rupture per Section 6.3.2 PM4057 (psi) or from F_{tu} per Equation 5.3.1-73
$m_{max\text{-}end\text{-}pad}$ is the maximum end-pad bending moment (in-lb).
K_{ftg} is the appropriate, program approved joint factor. (See Discussion, Section 5.3).

The margin of safety at yield[1] is given by

$$M.S.(end\text{-}pad) = 1.5M_{allow\text{-}yield} / (K_{ftg} \bullet K_{yld} \bullet m_{max\text{-}end\text{-}pad}) - 1$$

Equation 5.3.1-75

where
$M_{allow\text{-}yield}$ is the allowable moment calculated from the yield bending modulus per Section 6.3.2 PM4057 (psi) or from F_{ty} per Equation 5.3.1-73
$m_{max\text{-}end\text{-}pad}$ is the maximum end-pad bending moment (in-lb).
K_{yld} is the yield factor, See Section 5.3

The shear in the end-pad is due to fastener tension where the shear stress is given by

$$f_s = P/(2n\pi r_o t_e)$$

Equation 5.3.1-76

where
P is the bolt load (lbs).
r_o is the radius of the bolt head or a steel tension washer (in).
t_e is the end-pad thickness (in).
n is the number of fasteners at each location

The margin of safety is given by

$$M.S.\ (shear) = F_{su}/(K_{ftg} f_s) - 1$$

Equation 5.3.1-77

where
F_{su} is the allowable ultimate shear stress obtained from Reference 5-4 (psi).
K_{ftg} is the appropriate, program approved joint factor. (See Discussion, Section 5.3).
f_s is the applied shear stress (psi).

The bolts are analyzed using the fastener loads defined by **Equation 5.3.1-71**. In addition, fasteners A and C have applied bending moments defined in **Equation 5.3.1-70**. A combined margin of safety for fasteners A and C should be calculated per Section 5.2.3.4.

[1] Some programs require the use of a fitting factor at limit load. Others may require yield checks to be performed at some percent of limit load. These equations should be adjusted appropriately using K_{yld} and K_{ftg}. See Section 5.3

Copyright 2017 Lockheed Martin Corporation.
Note: The current version is always the version on the Lockheed Martin network.

5.3.1.5 Example Problems

This section will provide sample problems for each type of fitting discussed in Section 5.3.1.

Example	Type Of Analysis	Comments
5.3.1.5.1	Semicircular Bathtub Fitting	
5.3.1.5.2	Channel Fitting	
5.3.1.5.3	Angle Fitting	See comparison of channel and angle fittings at end of this section.
5.3.1.5.4	Pi Fitting Analysis	

Copyright 2017 Lockheed Martin Corporation.
Note: The current version is always the version on the Lockheed Martin network.

5.3.1.5.1 Example Problem – Semicircular Bathtub Fitting

Material

Aluminum 7075T6511 Extrusion <0.246"thk, A-Basis

F_{tu} = 79000 psi F_{ty} = 70000 psi

E= 10.4x10^6 psi e_o = 0.07 in/in

Fsu = 39500 (If e_o > 0.05, use 0.05)

Calculate material constants From PLASBEND, for this material

f_o=71300 psi (ult); f_o=25.41 psi (yld)

$(mc/I)_{b,k=2.0} = f + f_o (2-1) = 79000+71300(1) = 150300$

$\gamma = (mc/I)_{b,k=2.0}/F_{tu} -1 = 150300/79000-1 = 0.902$

Sketch

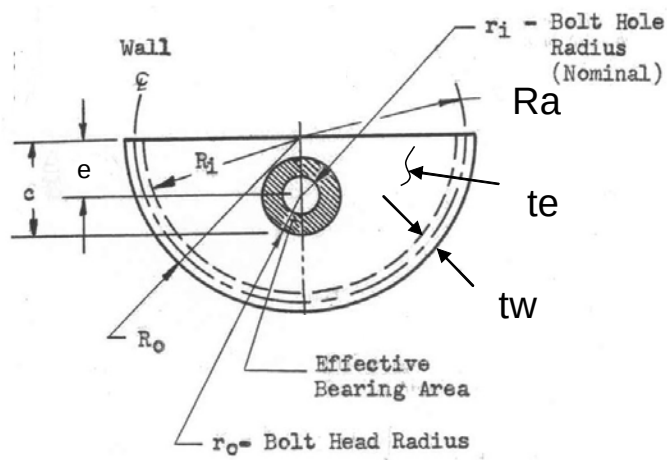

Parameter	value	unit	Parameter	value	unit
P	4000	lbs	K_{ftg}	1.15	---
t_e	0.28	in	K_{yld}	1.15	---
t_w	0.15	in	η Ref Section 5.2.3.2	0.85	---
R_i	1.0	in	t_e/t_w	1.867	in
R_o	1.3	in	$R_a=(R_i+R_o)/2$	1.15	in
r_{bolt-i}	0.1265	in	e	0.50	in
r_{bolt-o}	0.249	in			

Wall Tension Stress

Solution Step	Calculation	Result
Determine I for section	$I = 0.1098(R_o^4-R_i^4) – [0.283R_o^2R_i^2(R_o-R_i)]/(R_o+R_i)$ $= 0.1098(1.3^4-1.0^4) – [0.283(1.3)^2(1.0)^2(1.3-1.0)]/ (1.3+1.0)$	I= 0.14142 in^4
Determine c for section	$c=0.4244(R_o^2+ R_oR_i + R_i^2)/ (R_o+R_i)$ $= 0.4244[1.3^2+ 1.3(1.0) + 1.0^2]/ (1.3+1.0)$	c= 0.7362 in
Determine A for section	$A= (\pi/2)(R_o^2-R_i^2) = (\pi/2)(1.3^2-1.0^2)$	A= 1.0838 in^2
Calculate f_t	$f_t = P/(\eta A) = 4000/(0.85•1.0838)$	f_t= 4342 psi
Calculate m_{appl}	$m_{appl} = P(c-e) = (4000)(0.7362-0.50)$	m_{appl}= 945 in-lb
Determine M_{allow} based on F_{tu}, F_{ty}	$M_{allow-ult}= F_{tu}I/c =$ $79000(0.14142)/0.7362=15175$ $M_{allow-yield}= F_{ty}I/c =$ $70000(0.14142)/0.7362=13447$	$M_{allow-ult}$=15175 in-lb $M_{allow-yield}$=13447 in-lb
Determine R_t,R_b (Ultimate)	$R_t = K_{ftg}f_t/F_{tu} = 1.15(4342)/79000$ $R_b= K_{ftg}m_{appl}/M_{allow-ult} = 1.15(945)/15175$	R_t = 0.063 R_b= 0.072

Copyright 2017 Lockheed Martin Corporation.
Note: The current version is always the version on the Lockheed Martin network.

Calculate M.S.(based on F_{tu})	M.S. = 1 /(R_t+R_b) – 1 = 1/(0.063+0.072) -1	M.S.(bending) = 6.41 ULT
Determine R_t,R_b (Yield)	$R_t = K_{ftg}K_{yld}\bullet f_t/(1.5F_{ty})$ = 1.15•1.15•4342/[1.5(70000)] $R_b = K_{ftg}K_{yld}m_{appl}/(1.5M_{allow\text{-}yield})$ =1.15•1.15•945 /[1.5(13447)]	R_t = 0.055 R_b= 0.062
Calculate M.S.(based on F_{ty})	M.S. = 1 / (R_t+R_b) – 1 = 1/(0.055+0.062)-1	M.S.(bending) = 7.55 Yield
Determine k	Solid Circular Cylinder, Table 6.3.1-1	k= 1.698
Determine $(mc/I)_b$	$(mc/I)_b = f + f_{o\text{-}ULT}$ (k-1) = 79000+71300(1.698-1)	$(mc/I)_b$ = 128767
Determine $M_{allow\text{-}ultimate\text{-}PLASTIC}$	$M_{allow\text{-}ultimate\text{-}PLASTIC} = (mc/I)_b$ (I/c) = 128767(0.14142)/0.7362	M_{allow} = 24735 in-lb
Calculate Stress Ratios	$R_t = K_{ftg}f_t/F_{tu}$ = 1.15(4342)/79000 $R_b = K_{ftg}m_{appl}/M_{allow\text{-}ultimate}$ = 1.15(945)/24735	R_t= 0.063 R_b= 0.044
Determine Interaction Factor, r	Equation 6.3.6-6, PM4057 using K_{geom} = 2.36 and γ from above: r = [γ(Kgeom+2)/4.0]+1= [0.902(2.236+2)/4.0]+1 = 1.96	r = 1.96
Determine $R_{t\text{-}allow}$ ULTIMATE	Figure 6.3.6-2, PM4057, using r, R_b and R_t	$R_{t\text{-}allow\text{-}ultimate}$ = 0.708
Calculate M.S.(PLASTIC)	M.S. = $R_{t\text{-}allow\text{-}ultimate}$ / R_t – 1 = 0.708/0.063-1	M.S.(plastic) = 10.24 ULT
Determine $(mc/I)_b$ (Yield)	$(mc/I)_b = f + f_{o\text{-}YIELD}$ (k-1) = 70000+25410(1.698-1)	$(mc/I)_b$ = 87736
Determine $M_{allow\text{-}yield\text{-}PLASTIC}$	$M_{allow\text{-}yield\text{-}PLASTIC} = (mc/I)_b$ (I/c) = 87736(0.14142)/0.7362	$M_{allow\text{-}yield\text{-}PLASTIC}$ = 16854 in-lb
Calculate Stress Ratios	$R_t = K_{ftg}K_{yld}\bullet f_t/(1.5F_{ty})$ = 1.15•1.15•4342/[1.5(70000)] $R_b = K_{ftg}K_{yld}m_{appl}/(1.5M_{allow\text{-}yield})$ =1.15•1.15•945 /[1.5(16854)]	R_t= 0.055 R_b= 0.049
Determine $R_{t\text{-}allow}$ YIELD	Figure 6.3.6-2, PM4057, using r, R_b and R_t	$R_{t\text{-}allow\text{-}yield\text{-}PLASTIC}$ = 0.646
Calculate M.S.(plastic-YIELD)	M.S. =$R_{t\text{-}allow\text{-}Yield\text{-}PLASTIC}$/ R_t– 1 = 0.646/0.055-1	M.S.(plastic) = 10.75 YIELD
End-pad Bending Stress and Fastener Pull-Through		
Solution Step	**Calculation**	**Result**

Copyright 2017 Lockheed Martin Corporation.
Note: The current version is always the version on the Lockheed Martin network.

Calculate K_1	$K_1=1.2\bullet1.5\bullet[3/(4\pi)][2/(1-(r_i/R_a)^2)]\bullet[0.5+3\ln((R_a-e)/r_o)-0.5r_o^2/(R_a-e)^2] = 1.2\bullet1.5\bullet[3/(4\pi)][2/(1-(0.1265/1.15)^2)]\bullet[0.5+3\ln((1.15-0.50)/0.249)-0.5(0.249)^2/(1.15-0.50)^2] =$	$K_1= 2.88$
Calculate K_{fix}	$K_{fix} = 0.296433 - 0.006141(t_e/t_w) + 0.148112(t_e/t_w)^2 – 0.05691121(t_e/t_w)^3 + 0.00967867(t_e/t_w)^4 – 0.00079776(t_e/t_w)^5 + 0.000025933(t_e/t_w)^6$ $= 0.296433 - 0.006141(1.867) + 0.148112(1.867)^2 – 0.05691121(1.867)^3+ 0.00967867(1.867)^4 – 0.00079776(1.867)^5 + 0.000025933(1.867)^6$	$K_{fix} = 0.531$
Calculate $f_{b\text{-}end\text{-}pad}$	$f_{b\text{-}end\text{-}pad}=K_1K_{fix}P/t_e^2= 2.88(0.531)(4000)/(0.28)^2$	$f_{b\text{-}end\text{-}pad}$ = 78024 psi
Calculate M.S.(based on F_{tu})	M.S. = F_{tu} / ($K_{ftg}f_{b\text{-}end\text{-}pad}$) – 1 = 79000/[1.15(78024)]-1	M.S.(bending) = -0.12 ULT
Calculate M.S.(based on F_{ty})	M.S. = $(1.5F_{ty})/(K_{ftg}\bullet K_{yld}\bullet f_{b\text{-}end\text{-}pad})$– 1 = 1.5(70000) /(1.15•1.15•78024) -1	M.S.(bending) = +0.02 YIELD
Determine k	Rectangular Section, Table 6.3.1-1	k= 1.50
Determine $(mc/I)_b$	$(mc/I)_b = f + f_{o\text{-}ULT}$ (k-1) = 79000+71300(1.5-1)	$(mc/I)_b$ = 114650
Calculate M.S.(plastic-ULT)	M.S. =$(mc/I)_b$ / ($K_{ftg}f_{b\text{-}end\text{-}pad}$) – 1 = 114650/[1.15(78024)] -1	M.S.(plastic) = 0.28 ULT
Determine $(mc/I)_b$	$(mc/I)_b = f + f_{o\text{-}YIELD}$ (k-1) =70000+25410(1.5-1)	$(mc/I)_b$ = 82705
Calculate M.S.(plastic-YIELD)	M.S. =$1.5(mc/I)_b/(K_{ftg}K_{yld}f_{b\text{-}end\text{-}pad}$) – 1 = 1.5(82705)/(1.15•1.15•78024)-1	M.S.(plastic) = 0.20 YIELD
Calculate Pull-through Shear Stress	$f_s=P/(2\pi r_o t_e)$ = 4000/[2π(0.249)(0.28)]	f_s= 9131 psi
Calculate M.S.(Shear-ULT)	M.S.(shear)=$F_{su}/(K_{ftg}f_s)$–1= 39500/[1.15(9131)]-1	M.S.(Shear) = 2.76 ULT

The minimum margin for this fitting is the end-pad bending. It has a positive margin only if the material's plasticity is taken into account. In addition to these checks, the fastener margins would also need to be calculated per Section 5.2.3.3.

Copyright 2017 Lockheed Martin Corporation.
Note: The current version is always the version on the Lockheed Martin network.

5.3.1.5.2 Example Problem – Channel Fitting Analysis

Material

Aluminum 7075T6511 Extrusion <0.246"thk, A-Basis

F_{tu} = 79000 psi F_{ty} = 70000 psi

E= 10.4x10^6 psi e_o = 0.07 in/in

Fsu = 39500 psi (If e_o > 0.05, use 0.05)

Calculate material constants

From PLASBEND, for this material and section:

f_o=71300 psi (ult)

$M_{allow\text{-}ult}$=14655 in-lb

f_o=25.41 psi (yld)

$M_{allow\text{-}yield}$=9187 in-lb

I_{NA}=0.09216 in^4

y_{pna}=0.4442 in

c_{na}=0.8557 in

Q_{bottom}=0.0850 in^3

Determine the material plasticity, γ:

$(mc/I)_{b,k=2.0} = f + f_o\,(2\text{-}1)$ = 79000+71300(1) = 150300

$\gamma = (mc/I)_{b,k=2.0}/F_{tu}$ -1 = 150300/79000-1 = 0.902

Sketch

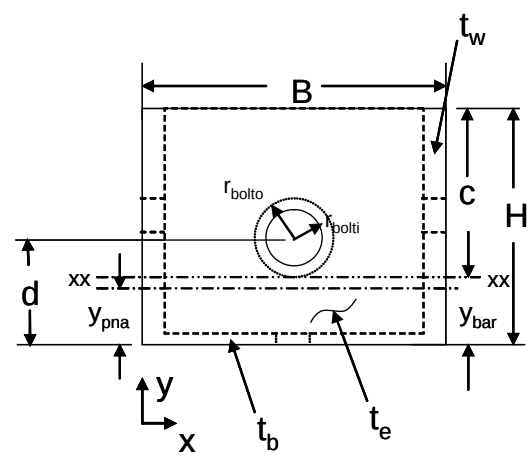

Parameter	value	unit	Parameter	value	unit
P	4000	lbs	K_{ftg}	1.15	---
t_e	0.28	in	K_{yld}	1.15	---
t_w	0.15	in	η Ref Section 5.2.3.2	0.85	---
t_b	0.15	in	R_{fillet}	0.15	in
B	1.3	in	$r_{bolt\text{-}i}$	0.1265	in
H	1.3	in	$r_{bolt\text{-}o}$	0.249	in
			d	0.80	in

Wall Tension Stress – Based on Ftu
Section properties calculated about Section Centroidal Axis

Solution Step	Calculation	Result
Determine y_{bar}, c for section	$y_{bar}=[2H^2t_w+t_b^2(B-2t_w)] / [2BH - 2(B-2t_w)(H-t_b)] = [2(1.3)^2(0.15)+0.15^2(1.3-2\cdot0.15)] / [2(1.3)(1.3) - 2(1.3-2\cdot0.15)(1.3-0.15)]$ c=H-ybar = 1.3-0.490	y_{bar}= 0.490 in c= 0.81 in
Determine A for section	$A= 2[H_{wall}\,t_w + (1-\pi/4)R_{fillet}^2]+(B-2t_w)t_b =2[1.3\cdot0.15+(1-\pi/4)(0.15)^2]+(1.3-2\cdot0.15)(0.15)$	A= 0.55 in^2
Determine I for section	$I_{xx} = [2t_wH^3+(B-2t_w)t_b^3]/3 - Ac^2 = [2\cdot0.15\cdot1.3^3+(1.3-2\cdot0.15)(0.15)^3]/3 – 0.55(0.490)^2$	I= 0.089 in^4
Calculate f_t	$f_t = P/(\eta A) = 4000/[0.85(0.55)]$	f_t= 8556 psi
Calculate m_{appl}	$m_{appl} = P(d-y_{bar}) = 4000(0.80-0.490)$	m_{appl}= 1240 in-lb
Calculate M_{allow} based on F_{tu}	$M_{allow\text{-}ult} = F_{tu}I/c = 79000(0.089)/0.81= 8680$	$M_{allow\text{-}ult}$ =8680 in-lb

Copyright 2017 Lockheed Martin Corporation.
Note: The current version is always the version on the Lockheed Martin network.

Solution Step	Calculation	Result
Determine R_t,R_b (Ultimate)	$R_t = K_{ftg}f_t/F_{tu}$ = 1.15(8556)/79000 $R_b = K_{ftg}f_b/F_{tu}$ = 1.15(1240)/8680	R_t = 0.125 R_b= 0.164
Calculate M.S.(based on F_{tu})	M.S. = 1 / (R_t+R_b) – 1 = 1/(0.125+0.164) -1	M.S.(bending) = 2.46 ULT
Calculate M_{allow} based on F_{ty}	$M_{allow\text{-}ult} = F_{tu}I/c$ = 70000(0.089)/0.81= 7691	$M_{allow\text{-}yld}$ =7691 in-lb
Determine R_t,R_b (Yield)	$R_t = f_t/(1.5F_{ty})$ = 8556/[1.5(70000)] $R_b = K_{ftg}K_{yld}m_{appl}/(1.5M_{allow\text{-}yld})$ = 1.15•1.15•1240/[1.5(7691)]	R_t = 0.081 R_b= 0.142
Calculate M.S.(based on F_{ty})	M.S. = 1 / (R_t+R_b) – 1 = 1/(0.081+0.142) -1	M.S.(bending) = 3.48 Yield

Wall Tension Stress – Based on Bending Modulus

Solution Step	Calculation	Result
Determine Interaction Factor, r	Q based on plastic neutral axis (subsection where bending stress of opposite sign to axial stress) K_{geom} = Ac/2Q = 0.54(0.444)/(2•0.085) = 1.41 γ from above, r from Figure 6.3.6-1 r = [(1.41-1)(0.902)/1.1]+1	K_{geom} = 1.41 r = 1.34
Calculate $m_{plastic}$	$m_{plastic} = P(d\text{-}y_{pna})$ = 4000(0.80-0.444)	$m_{plastic}$ = 1424 in-lb
Calculate Stress Ratios (Ultimate)	$R_t = K_{ftg}f_t/F_{tu}$ = 1.15(8556)/79000 $R_b = K_{ftg}m_{plastic}/M_{allow\text{-}ultimate}$ = 1.15(1424)/14655	R_t= 0.125 R_b= 0.112
Determine $R_{t\text{-}allow}$ (Ultimate)	Figure 6.3.6-2, PM4057, using r, R_b and R_t	$R_{t\text{-}allow\text{-}ultimate}$ = 0.578
Calculate M.S.(PLASTIC)	M.S. = $R_{t\text{-}allow\text{-}ultimate}$/ R_t – 1 = 0.578/0.125 - 1	M.S.(plastic) = 3.62 ULT
Calculate Stress Ratios (Yield)	$R_t = K_{ftg}K_{yld}f_t/(1.5F_{ty})$= 1.15•1.15•8556/[1.5(70000)] $R_b = K_{ftg}K_{yld}m_{plastic}/(1.5M_{allow\text{-}yield})$= 1.15•1.15•1424/[1.5(9187)]	R_t = 0.108 R_b= 0.137
Determine $R_{t\text{-}allow}$ YIELD	Figure 6.3.6-2, PM4057, using r, R_b and R_t	$R_{t\text{-}allow\text{-}yield}$ = 0.486
Calculate M.S.(plastic-YIELD)	M.S. =$R_{t\text{-}allow\text{-}yield}$/ R_t– 1 = 0.486/0.108-1	M.S.(plastic) = 3.50 YIELD

End-pad Bending Stress and Fastener Pull-Through

Solution Step	Calculation	Result
Calculate K_r	h=(H-t_b/2) = 1.225 r_i/h = 0.1265/1.225 = 0.1033 ≤ 0.500 Equation valid. $K_r = 2.2 - 12.8833(r_i/h) + 44.41667(r_i/h)^2 - 81.6667(r_i/h)^3 + 58.3333(r_i/h)^4$	K_r= 1.26

Copyright 2017 Lockheed Martin Corporation.
Note: The current version is always the version on the Lockheed Martin network.

Calculate K_a –(here a is short side, b is long side)	b=1.3-0.15/2 = 1.225; a=1.3-.15 = 1.15 $K_a=[1.14(r_i/a)+0.062][b/a-1]^{0.47} + 1 =$ $[1.14(0.1265/1.15)+0.062]\bullet$ $[1.225/1.15-1]^{0.47} + 1$	$K_a = 1.051$
Calculate K_e	$K_e =[2(d-t_b/2)]/h = [2(0.8-0.15/2)]/1.225$	$K_e = 1.183$
Calculate $f_{b\text{-end-pad}}$	$f_{b\text{-end-pad}}=0.65K_rK_aK_eP/t_e^2=$ $0.65(1.26)(1.051)(1.183)(4000)/0.28^2$	$f_{b\text{-end-pad}} = 51954$ psi
Calculate M.S.(based on F_{tu})	M.S. = $F_{tu} / (K_{ftg}f_{b\text{-end-pad}}) – 1 =$ 79000/[1.15(51954)] -1	M.S.(bending) = 0.32 ULT
Calculate M.S.(Yield)	M.S. = $(1.5F_{ty})/(K_{ftg}K_{yld}f_{b\text{-end-pad}})– 1 =$ 1.5(70000)/(1.15•1.15•51954) -1	M.S.(bending) = 0.53 YIELD
Determine k	Rectangular Section, Table 6.3.1-1	k= 1.50
Determine $(mc/I)_b$	$(mc/I)_b = f + f_{o\text{-ULT}} (k-1) =$ 79000+71300(1.5-1)	$(mc/I)_b = 114650$
Calculate M.S.(plastic-ULT)	M.S. =$(mc/I)_b / (K_{ftg}f_{b\text{-end-pad}}) – 1 =$ 114650/[1.15(51954)]-1	M.S.(plastic) = 0.92 ULT
Determine $(mc/I)_b$	$(mc/I)_b = f + f_{o\text{-YIELD}} (k-1) =$ 70000+25410(1.5-1)	$(mc/I)_b = 82705$
Calculate M.S.(plastic-YIELD)	M.S. =$1.5(mc/I)_b/(K_{ftg}\bullet K_{yld}\bullet f_{b\text{-end-pad}}) – 1$ = 1.5(82705)/ (1.15•1.15•51954)-1	M.S.(plastic) = 0.81 YIELD
Calculate Pull-through Shear Stress	$f_s=P/(2\pi r_o t_e) = 4000/(2\pi\bullet 0.249\bullet 0.28)$	$f_s= 9131$ psi
Calculate M.S.(Shear-ULT)	M.S.(shear)=$F_{su}/(K_{ftg}f_s)–1=$ 39500/[1.15(9131)]-1	M.S.(Shear) = 2.76 ULT

The minimum margin for this fitting is the end-pad bending. It has a positive margin based on Ftu and plasticity would not need to be used. This is a very labor intensive analysis and is best suited for automated application. The tool IDAT/FITTING automates this method.

In addition to these checks, the fastener margins would also need to be calculated per Section 5.2.3.3.

Copyright 2017 Lockheed Martin Corporation.
Note: The current version is always the version on the Lockheed Martin network.

5.3.1.5.3 Example Problem – Angle Fitting Analysis

Material

Aluminum 7075T6511 Extrusion <0.246"thk, A-Basis

F_{tu} = 78000 psi F_{ty} = 70000 psi

E= 10.4×10^6 psi e_o = 0.07 in/in

Fsu = 41000 (If e_o > 0.05, use 0.05)

Calculate material constants

$e_u = e_o + F_{tu} / E = 0.0500+78000/10.4\times10^6 = 0.0575$ in/in

$e_{p_{tu}} = e_u - F_{tu}/E = 0.0575-78000/10.4\times10^6 = 0.0500$ in/in

$n_t = \log(e_{p_{tu}}/0.002)/\log(F_{tu}/F_{ty}) = \log(0.05/0.002)/\log(78000/70000) = 29.75$

$f_{o\text{-}ULT} = (6F_{tu}/e_u^{\,2})[F_{tu}^{\,2}/(3E^2) + e_{p_{tu}}(F_{tu}/E)\bullet(n_t+1)/(n_t+2) + (n_t e_{p_{tu}}^2)/(2n_t+1)] - 2F_{tu}$

$= (6\bullet78000/0.0575^2)[78000^2/(3(10.4\times10^6)^2) + 0.050(78000/10.4\times10^6)(29.75+1)/(29.75+2) + (29.75\bullet0.0500^2)/(2\bullet29.75+1)] - 2(78000) = 72073$

$(mc/I)_{b,k=2.0} = f + f_o(2-1) = 78000+72073(1) = 150073$

$\gamma = (mc/I)_{b,k=2.0}/F_{tu} - 1 = 150073/78000-1 = 0.924$

Sketch

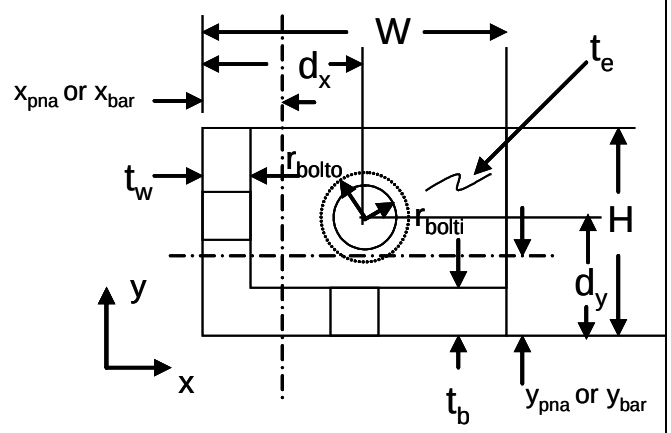

Parameter	value	unit	Parameter	value	unit
P	4000	lbs	K_{ftg}	1.15	---
t_e	0.28	in	η Ref Section 5.2.3.2	0.85	---
t_w	0.15	in	d_x	0.65	in
t_b	0.15	in	d_y	0.80	in
W	1.15	in	$r_{bolt\text{-}i}$	0.126	in
H_{end}	1.3	in	$r_{bolt\text{-}o}$	0.49	in
H_{wall}	1.3	in	R_{fillet}	0.15	in

Wall Tension Stress – Based on Ftu

Solution Step	Calculation	Result
Determine x_{bar} ,y_{bar}, for section	$x_{bar}=[W^2t_b+t_w^2(H-t_b)] / [2(Wt_b + (H-t_b)t_w)]= [1.15^2(0.15)+0.15^2(1.3-0.15)] / [2(1.15(0.15) + (1.3-0.15)0.15)]$ $y_{bar}=[H^2t_w+t_b^2(W-t_w)] / [2(Ht_w + (W-t_w)t_b)]= [1.3^2(0.15)+0.15^2(1.15-0.15)] / [2(1.3(0.15) + (1.15-0.15)0.15)]$	x_{bar} = 0.325 in y_{bar} = 0.400 in
Determine A for section	$A= (H_{wall}-t_b)t_w+Wt_b + (1-\pi/4)R^2_{fillet} = (1.3-0.15)(0.15)+1.15(0.15)+(1-\pi/4)(0.15)^2$	A= 0.350 in^2
Determine I for section	$I_{xx} = [t_wH^3+(W-t_w)t_b^3]/3 - A(y_{bar})^2 = [0.15(1.3)^3+(1.15-0.15)(0.15)^3]/3-0.345(0.400)^2$ $I_{yy} = [t_bW^3+(H-t_b)t_w^3]/3 - A(x_{bar})^2 = [0.15(1.15)^3+(1.3-0.15)(0.15)^3]/3-0.345(0.325)^2$	I_{xx}= 0.0558 in^4 I_{yy}= 0.0409 in^4
Calculate f_t	$f_t = P/(\eta A) = 4000/(0.85\bullet0.350)$	f_t= 13445 psi

Copyright 2017 Lockheed Martin Corporation.
Note: The current version is always the version on the Lockheed Martin network.

Calculate $m_{appl-xx}$, $m_{appl-yy}$	m_{appl-x}= P(d_y-y_{bar})= 4000(0.80-0.40) m_{appl-y}= P(d_x-x_{bar})= 4000(0.65-0.325)	$m_{appl-xx}$= 1600 in-lb $m_{appl-yy}$= 1300 in-lb

Solution Step	Calculation	Result
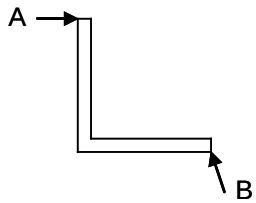 Determine f_b at A and B	$f_{b@A}$=$f_{bxx@cy}$ - $f_{byy@xbar}$ = 1600(1.3-0.400)/0.0558 – 1300(0.325)/0.0409 = 25806-10330 = 15476 psi $f_{b@B}$= - $f_{bxx@ybar}$ + $f_{byy@cx}$ = -1600(0.400)/0.0558 + 1300(1.15-0.325)/0.0409 =-11469+26222 = 14753 psi	f_b=MAX($f_{b@A}$, $f_{b@B}$) = 15476 psi
Determine R_t,R_b	R_t = $K_{ftg}f_t/F_{tu}$ = 1.15(13445)/78000 R_b= $K_{ftg}f_b/F_{tu}$ = 1.15(15476)/78000	R_t = 0.198 R_b= 0.228
Calculate M.S.(based on F_{tu})	M.S. = 1 / (R_t+R_b) – 1 = 1/(0.198+0.228)-1	M.S.(bending) = 1.35 ULT
Determine R_t,R_b	R_t = f_t/(1.5F_{ty}) = 13445/[1.5(70000)] R_b= f_b/(1.5F_{ty}) = 15476/[1.5(70000)]	R_t = 0.128 R_b= 0.147
Calculate M.S.(based on F_{ty})	M.S. = 1 / (R_t+R_b) – 1 = 1/(0.128+0.147) -1	M.S.(bending) = 2.66 Yield
Wall Tension Stress – Based on Bending Modulus Use equivalent Semi-circular Fitting.		
Calculate R_a, e	R_a=[(H-t_b/2)+(W-t_w/2)]/π = [(1.3-0.15/2)+(1.15-0.15/2)]/π e = R_a-[(d_y-t_b/2)+(d_x-t_w/2)]/2.0 = 0.732-[(0.80-0.15/2)+(0.65-0.15/2)]/2.0	R_a=0.732 in e=0.082 in
Calculate A	A=πR_a(t_w+t_b)/2 =π(0.732)(0.15+0.15)/2	A=0.345 in^2
Calculate I, c	I= 0.298R_a^3 (t_w+t_b)/2 = 0.298(0.732)^3 (0.15+0.15)/2 c = 0.637R_a = 0.637(0.732)	I=0.0175 in^4 c=0.466 in
Calculate $m_{plastic}$	$m_{plastic}$ = P(c-e) = 4000(0.466-0.082)	$m_{plastic}$ = 1536
k	Solid Circular Cylinder, Table 6.3.1-1	k=1.698
Determine (mc/I)$_b$	(mc/I)$_b$ = f + f_o (1.698-1) = 78000+72073(0.698)	(mc/I)$_b$ = 128307
$M_{allow-ultimate-PLASTIC}$	$M_{allow-ultimate-PLASTIC}$=(mc/I)$_b$(I/c) = 128307(0.0175/0.466)	$M_{allow-ultimate-PLASTIC}$ = 4818 in-lb
Calculate Stress Ratios	R_t=$K_{ftg}f_t/F_{tu}$ = 1.15(13445)/78000 R_b=$K_{ftg}m_{plastic}/M_{allow-ultimate-PLASTIC}$= 1.15(1536)/4818	R_t= 0.198 R_b= 0.367
Determine Interaction Factor, r	Figure 6.3.6-2, PM4057 using K_{geom}=2.36 and γ from above. r=[(2.36+2)0.924/4]+1	r = 2.007
Determine $R_{t-allow}$ ULTIMATE	Figure 6.3.6-2, PM4057, using r, R_b and R_t	$R_{t-allow-ultimate-PLASTIC}$ = 0.436
Calculate M.S.(PLASTIC)	M.S. = $R_{t-allow-ultimate-PLASTIC}$ / R_t – 1 = 0.436/0.198-1	M.S.(plastic) = 1.20 ULT

Copyright 2017 Lockheed Martin Corporation.
Note: The current version is always the version on the Lockheed Martin network.

Solution Step	Calculation	Result
Determine f_o (yield)	$e = F_{ty}/E + e_{ptu}(F_{ty}/F_{tu})^{nt} = 70000/10.4x10^6 + 0.0500(70000/78000)^{28.75} = 0.00873$ $e_p = e - F_{ty}/E = 0.00873 - 70000/10.4x10^6 = 0.002$ $f_{o\text{-}YIELD} = (6F_{ty}/e^2)[F_{ty}^2/(3E^2) + e_p(F_{ty}/E)(n_t + 1)/(n_t + 2) + (n_t e_p^2)/(2n_t + 1)] - 2F_{ty}$ $= (6 \bullet 70000/0.00873^2)[70000^2/(3 \bullet 10.4x10^6)^2 + 0.002(70000/10.4x10^6)(29.75+1)/(29.75+2) + (29.75 \bullet 0.002^2)/(2 \bullet 29.75+1)] - 2(70000) = 26280$	$f_{o\text{-}YIELD}$ = 26280 psi
Determine $(mc/I)_b$	$(mc/I)_b = f + f_{o\text{-}YIELD}(k-1) = 70000+26280(1.698-1)$	$(mc/I)_b$ = 88343
Determine $M_{allow\text{-}yield\text{-}PLASTIC}$	$M_{allow\text{-}yield\text{-}PLASTIC} = (mc/I)_b (I/c) = 88343(0.0175/0.466)$	$M_{allow\text{-}yield\text{-}PLASTIC}$ = 3318 in-lb
Calculate Stress Ratios	$R_t = f_t/(1.5F_{ty}) = 13445/[1.5(70000)]$ $R_b = m_{appl}/[1.5M_{allow\text{-}yield\text{-}PLASTIC}] = 1536/[1.5(3318)]$	R_t= 0.128 R_b= 0.309
Determine $R_{t\text{-}allow}$ YIELD	Figure 6.3.6-2, PM4057, using r, R_b and R_t	$R_{t\text{-}allow\text{-}yield\text{-}PLASTIC}$ = 0.360
Calculate M.S.(plastic-YIELD)	$M.S. = R_{t\text{-}allow\text{-}Yield\text{-}PLASTIC}/R_t - 1 = 0.360/0.128-1$	M.S.(plastic) = <u>1.81 YIELD</u>
End-pad Bending Stress and Fastener Pull-through		
Calculate h, w	$h = (H-t_b/2) = (1.3-0.15/2) = 1.225$ $w = (W-t_w/2) = (1.15-0.15/2) = 1.075$	h=1.225 w=1.075
Calculate R_a, e	$R_a = (h + w)/\pi = (1.225+1.075)/\pi$ $e = R_a - [(d_y-t_b/2) + (d_x-t_w/2)]/2 = 0.732 - [(0.8-0.15/2)+(0.65-0.15/2)]/2$	R_a= 0.732 e = 0.082
Calculate K_1	$K_1 = 1.2 \bullet 1.5 \bullet [3/(4\pi)][2/(1-(r_i/R_a)^2)] \bullet [0.5+3\ln\{(R_a-e)/r_o\}-0.5r_o^2/(R_a-e)^2] = 1.2 \bullet 1.5 \bullet [3/(4\pi)][2/(1-(0.1265/0.732)^2)] \bullet [0.5+3\ln\{(0.732-0.082)/0.249\}-0.5(0.249)^2/(0.732-0.082)^2]$	K_1= 2.93
Calculate K_{fix}	$t_e/t_w = 0.28/0.15 = 1.866$ $K_{fix} = 0.296433 - 0.006141(t_e/t_w) + 0.148112(t_e/t_w)^2 - 0.05691121(t_e/t_w)^3 + 0.00967867(t_e/t_w)^4 - 0.00079776(t_e/t_w)^5 + 0.000025933(t_e/t_w)^6$	K_{fix} = 0.5314
Calculate $f_{b\text{-}end\text{-}pad}$	$f_{b\text{-}end\text{-}pad} = K_1 K_{fix} P/t_e^2 = 2.93(0.5314)(4000)/0.28^2$	$f_{b\text{-}end\text{-}pad}$ = 79388 psi
Calculate M.S.(based on F_{tu})	$M.S. = F_{tu}/(K_{ftg} f_{b\text{-}end\text{-}pad}) - 1 = 78000/[1.15(79388)] -1 =$	M.S.(bending) = <u>- 0.15 ULT</u>
Calculate M.S.(Yield)	$M.S. = 1.5F_{ty}/f_{b\text{-}end\text{-}pad} - 1 = 1.5(70000)/79388-1$	M.S.(bending) = <u>0.32 YIELD</u>
Determine k	Rectangular Section, Table 6.3.1-1	k= 1.50

Copyright 2017 Lockheed Martin Corporation.
Note: The current version is always the version on the Lockheed Martin network.

Solution Step	Calculation	Result
Determine $(mc/I)_b$	$(mc/I)_b = f + f_{o\text{-}ULT}(k\text{-}1) =$ 78000+72073(1.5-1)	$(mc/I)_b = 114035$
Calculate M.S.(plastic-ULT)	M.S. $=(mc/I)_b / (K_{ftg}f_{b\text{-}end\text{-}pad}) - 1 =$ 114035/[1.15(79388)]-1	M.S.(plastic) = +0.25 ULT
Determine $(mc/I)_b$	$(mc/I)_b = f + f_{o\text{-}YIELD}(k\text{-}1) =$ 70000+25879(1.5-1)	$(mc/I)_b = 82939$
Calculate M.S.(plastic-YIELD)	M.S. $=1.5(mc/I)_b/(f_{b\text{-}end\text{-}pad}) - 1 =$ 1.5(82939)/79388-1	M.S.(plastic) = 0.57 YIELD
Calculate Pull-through Shear Stress	$f_s=P/(2\pi r_o t_e) = 4000/(2\pi \cdot 0.249 \cdot 0.28)$	$f_s = 9131$ psi
Calculate M.S.(Shear-ULT)	M.S.(shear)$=F_{su}/(K_{ftg}f_s)-1=$ 41000/[1.15(9131)] -1	M.S.(Shear) = 2.90 ULT

The geometry of this angle fitting is very similar to the channel fitting of the previous example. The loading is identical; however the end-pad margin based on F_{tu} is negative for the angle illustrating the reduction in strength. The angle wall margins go down due to the reduction in material and the addition of the eccentricity about the y-y axis.

Failure Mode	Margin – Channel	Margin - Angle
Wall Tension Stress - ULT (based on F_{tu})	2.43	1.35
Wall Tension Stress – YIELD (based on F_{ty})	4.31	2.66
Wall Tension Stress - ULT (based on modulus of rupture)	3.40	1.20
Wall Tension Stress – YIELD (based on bending modulus)	4.65	1.81
End-pad Bending – ULT (based on F_{tu})	0.30	-0.15
End-pad Bending – Yield (based on F_{ty})	1.02	0.32
End-pad Bending – ULT (based on modulus of rupture)	0.91	0.25
End-pad Bending – Yield (based on bending modulus)	1.39	0.57

In addition to these checks, the fastener margins would also need to be calculated per Section 5.2.3.3

Copyright 2017 Lockheed Martin Corporation.
Note: The current version is always the version on the Lockheed Martin network.

5.3.1.5.4 Example Problem – Pi Fitting Analysis

Material

Aluminum 7175 Extrusion S-Basis

F_{tu} = 63000 psi F_{ty} = 52000 psi

E= 10.1×10^6 psi e_o = 0.04 in/in

Fsu = 40000 (If e_o > 0.05, use 0.05)

Calculate material constants

$e_u = e_o + F_{tu} / E = 0.0400+63000/10.1\times10^6 = 0.0462$ in/in

$e_{p_{tu}} = e_u - F_{tu}/E = 0.0462-63000/10.1\times10^6 = 0.0400$ in/in

$n_t = \log(e_{p_{tu}}/0.002)/\log(F_{tu}/F_{ty}) = \log(0.04/0.002)/\log(63000/52000) = 15.612$

$f_{o\text{-}ULT} = (6F_{tu}/e_u^{\,2})[F_{tu}^{\,2}/(3E^2) + e_{p_{tu}}(F_{tu}/E)\bullet (n_t + 1) / (n_t + 2) + (n_t e_{p_{tu}}^2) / (2n_t + 1)] - 2F_{tu}$

$= (6\bullet63000/0.0462^2)[63000^2/[3\bullet(10.1\times10^6)^2] + 0.040(63000/10.1\times10^6)(15.612+1)/(15.612+2) + (15.612\bullet0.0400^2)/(2\bullet15.612+1)] - 2(63000) = 55254$

$(mc/I)_{b,k=1.5} = f + f_o\,(1.5-1) = 63000+55254(0.5) = 90627$

$(mc/I)_{b,k=2.0} = f + f_o\,(2-1) = 63000+55254(1) = 118254$

$\gamma = (mc/I)_{b,k=2.0}/F_{tu} - 1 = 118254/63000-1 = 0.877$

Sketch

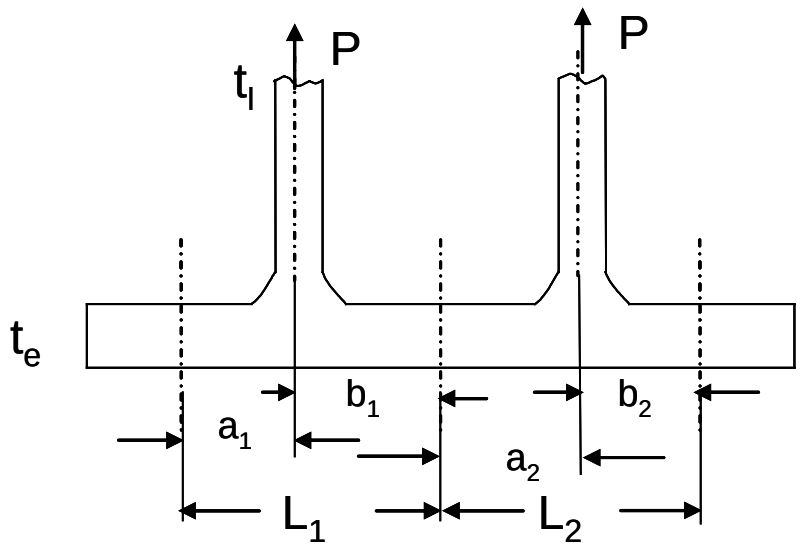

Parameter	value	unit	Parameter	value	unit
P	7000	lbs	K_{ftg}	1.15	---
t_e	0.21	in	η Ref Section 5.2.3.2	0.8	---
t_l	0.15	in	H	2.0	in
L_1	1.25	in	L_2	1.0	in
a_1	0.75	in	a_2	0.50	in
b_1	0.50	in	b_2	0.50	in
$D_{bolt\text{-}i}$	0.25	in	$D_{bolt\text{-}head}$	0.381	in

Analyze Pi Fitting Legs

Solution Step	Calculation	Result
Determine A for section	$A = Ht_l = 2(0.15)$	$A = 0.30$ in^2
Calculate f_t	$f_t = P/(\eta A) = 7000/(0.80\bullet0.30)$	f_t = 29167 psi
Calculate M.S. (wall)	$M.S.(wall) = F_{tu}/(K_{ftg}f_t)-1 = 63000/[1.15(29167)]-1$	**M.S.(wall) =<u>0.88 ULT</u>**
Calculate M.S. (wall)	$M.S.(wall) = (1.5F_{ty})/f_t-1 = 1.5(52000)/29167-1$	**<u>M.S.(wall) =1.67 YIELD</u>**

Develop End-pad Loads

Calculate M_b (100% fixity)	$M_b=[P_1a_1(L_1^2-a_1^2)/(L_1)-P_2a_2(L_2^2-a_2^2)/(2L_2)-P_1b_1(L_1^2-b_1^2)/(2L_1)+P_2b_2(L_2^2-b_2^2)/(L_2)] / [((3L_1)/(2)+(3L_2)/(2)] = [7000(0.75)(1.25^2-0.75^2)/1.25-7000(0.50)(1.00^2-0.50^2)/(2\bullet1.00)-7000(0.50)(1.25^2-0.50^2)/(2\bullet1.25)+7000(0.50)(1.00^2-0.50^2)/(1.00)]/[3\bullet1.25/2+3\bullet1.00/2]$	M_b= 1089 in-lb end fasteners fully fixed.
Calculate M_a (100% fixity)	$M_a=P_1b_1(L_1^2-b_1^2)/(2L_1^2)-M_b/2 = 7000(0.500)(1.25^2-0.500^2)/(2\bullet1.25^2)-1089/2$	M_a=925.5 in-lbs 100% fixity

Copyright 2017 Lockheed Martin Corporation.
Note: The current version is always the version on the Lockheed Martin network.

Solution Step	Calculation	Result
Calculate M'_a (50% fixity)	$M'_a = 0.50M_a = 0.5(925.5)$	M'_a = 463 in-lb 50% fixity
Calculate M_c (100% fixity)	$M_c=P_2a_2(L_2^2-a_2^2)/(2L_2^2)- M_b/2 =$ $7000(0.500)(1.00^2-0.500^2)/(2\bullet1.00^2)-1089/2$	M_c=768 in-lbs 100% fixity
Calculate M'_c (50% fixity)	$M'_c = 0.50M_c = 0.5(768)$	M'_c = 384 in-lb 50% fixity
Calculate M'_b (50% fixity)	$M_b=[P_1a_1(L_1^2-a_1^2)/(L_1)+P_2b_2(L_2^2-b_2^2)/(L_2)-M'_aL_1-M'_cL_2] / [2L_1+2L_2] =$ $[7000(0.75)(1.25^2-0.75^2)/1.25 + 7000(0.50)(1.00^2-0.50^2)/(1.00) –$ $463(1.25) –384(1.0)] / [2\bullet1.25+2\bullet1.00]$	M_b= 1303 in-lb end fasteners 50% fixed.
Calculate Fastener Loads	$P_{fas-a} = R_a = P_1b_1/L_1+M'_a/L_1-M'_b/L_1 = 7000(0.50)/1.25+463/1.25-1303/1.25$ $P_{fas-b} = R_b = P_1a_1/L_1 + P_2b_2/L_2– M'_a/L_1 + M'_b/L_1 – M'_c/L_2 + M'_b/L_2 =$ $7000(0.75)/1.25 +7000(0.50)/1.00 – 463/1.25 +1303/1.25 -384/1.00 + 1303/1.00$ $P_{fas-c}= R_c = P_2a_2/L_2+M'_c/L_2-M'_b/L_2=7000(0.50)/1.0+384/1.0-1303/1.0$	P_{fas-a} = 2128 lbs P_{fas-b} = 9291 lbs P_{fas-c} = 2581 lbs
Calculate Distributed Load on Fastener B	$w_{fasb} = P_{fas-b}/D_{bolt-head} = 9291/0.381$	w_{fasb} = 24385 lb/in

Continued next page

Copyright 2017 Lockheed Martin Corporation.
Note: The current version is always the version on the Lockheed Martin network.

Construct Bending Moment Diagram

x	Moment +CW Applied to the beam
0.0	$M'_a = 463$
$a_1 - R_a - t_l/2 = 0.75 - 0.125 - 0.15/2 = 0.55$	$M'_a - R_a x = 463 - 2128(0.55)$
$a_1 = 0.75$	$M'_a - R_a a_1 = 463 - 2128(0.75)$
$a_1 + R_b + t_l/2 = 0.75 + 0.125 + 0.15/2 = 0.95$	$M'_a - R_a x + P_1(R_b + t_l/2) = 463 - 2128(0.95) + 7000(0.125 + 0.15/2)$
$L_1 = 1.25$	$M'_a - R_a L_1 + P_1 b_1 - w_c(D_h/2)(D_h/4) = 463 - 2128(1.25) + 7000(0.50) - 24385(0.381/2)(0.381/4)$
$L_1 + a_2 - R_b - t_l/2 = 1.25 + 0.50 - 0.125 - 0.15/2 = 1.55$	$M'_a - R_a x + P_1(b_1 + a_2 - R_b - t_l/2) - w_c(D_h/2)(a_2 + D_h/4 - R_b - t_l/2) - w_c(D_h/2)(a_2 - D_h/4 - R_b - t_l/2) = 463 - 2125(1.55) + 7000(0.50 + 0.50 - 0.125 - 0.15/2) - 24385(0.381/2)(0.5 + 0.381/4 - 0.125 - 0.15/2) – 24385(0.381/2)(0.5 - 0.381/4 - 0.125 - 0.15/2)$
$L_1 + a_2 = 1.25 + 0.5 = 1.75$	$M'_a - R_a(L_1 + a_2) + P_1(b_1 + a_2) - w_c(D_h/2)(a_2 + D_h/4) - w_c(D_h/2)(a_2 - D_h/4) = 463 - 2125(1.75) + 7000(0.50 + 0.50) - 24385(0.381/2)(0.5 + 0.381/4) – 24385(0.381/2)(0.5 - 0.381/4)$
$L_1 + a_2 + R_c + t_l/2 = 1.25 + 0.5 + .125 + 0.15/2 = 1.95$	$M'_a - R_a(L_1 + a_2 + R_c) + P_1(b_1 + a_2 + R_c) - w_c(D_h/2)(a_2 + D_h/4 + R_c) - w_c(D_h/2)(a_2 - D_h/4 + R_c) + P_2 R_c = 463 - 2125(1.95) + 7000(0.50 + 0.50 + 0.125 + 0.075) - 24385(0.381/2)(0.5 + 0.381/4 + 0.125 + 0.075) - 24385(0.381/2)(0.5 - 0.381/4 + 0.125 + 0.075)$
$L_1 + L_2 = 1.25 + 1.0 = 2.25$	$M'_a - R_a(L_1 + L_2) + P_1(b_1 + L_2) - w_c(D_h/2)(L_2 + D_h/4) - w_c(D_h/2)(L_2 - D_h/4) + P_2 b_2 = 463 - 2125(2.25) + 7000(0.50 + 1.0) - 24385(0.381/2)(1.0 + 0.381/4) - 24385(0.381/2)(1.0 - 0.381/4) + 7000(0.50)$

Location (in)	Moment (in-lb)
0	463
0.55	-708
0.75	-1133
0.95	-159
1.25	861
1.55	-18
1.75	-907
1.95	-390
2.25	384

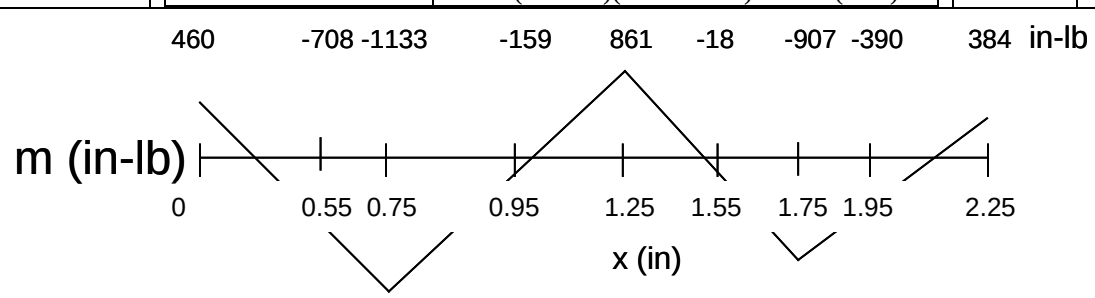

Analyze Pi Fitting End-pad

Net Width at center fastener	W=2.0 – 2fasteners(0.25 in Dia) = 1.50 in	W=1.5 in
Calculate I, c	$c = t_{end}/2 = 0.21/2 = 0.105$ in $I = Wt_e^3/12 = 1.50(0.21)^3/12 = 0.0011576$ in^4	c=0.105 in I = 0.0011576 in^4

Copyright 2017 Lockheed Martin Corporation.
Note: The current version is always the version on the Lockheed Martin network.

Solution Step	Calculation	Result
m	861 in-lbs (highest net section moment)	m=861 in-lbs
Calculate Stress	f_b = 861(0.105)/0.0011576	f_b = 78096 psi
Calculate M.S.(end-pad)	MS = $F_{tu}/(f_b K_{ftg})$ -1 = 63000/[1.15(78096)]-1	MS(end-pad)= <u>- 0.30 ULT</u>
Calculate $M_{allow\text{-}ULT\text{-}PLASTIC}$	$M_{allow\text{-}ULT\text{-}PLASTIC}$= $(mc/I)_b(I/c)$= 90627(0.0011576/0.105)	$M_{allow\text{-}ULT\text{-}PLASTIC}$= 999 in-lbs
Calculate M.S. (end-pad)	MS = $M_{all}/(K_{ftg}m)$ -1 = 999/[1.15(861)]-1	MS(end-pad)=<u>0.01 ULT-PLASTIC</u>
Calculate M.S.(end-pad)	MS = $1.5F_{ty}/f_b$ -1 = 1.5(52000)/78096-1	MS(end-pad)= <u>0.00 Yield</u>
Determine f_o (yield)	$e = F_{ty}/E + e_{ptu}(F_{ty}/F_{tu})^{nt}$ = 52000/10.1x10^6 + 0.0400(52000/63000)$^{15.612}$ = 0.00715 e_p= e-F_{ty}/E = 0.00715-52000/10.1x10^6=0.002 $f_{o\text{-}YIELD} = (6F_{ty}/e^2)[F_{ty}^2/(3E^2) + e_p(F_{ty}/E)(n_t + 1)/(n_t + 2) + (n_t e_p^2)/(2n_t + 1)] - 2F_{ty}$ = (6•52000/0.00715^2)[52000^2/{3(10.1x10^6)^2}+ 0.002(52000/10.1x10^6)(15.612+1)/(15.612+2) + (15.612•0.002^2)/(2•15.612+1)] – 2(52000) = 21026	$f_{o\text{-}YIELD}$ = 21026 psi
Determine $(mc/I)_b$	$(mc/I)_b = f + f_{o\text{-}YIELD}(k-1)$ = 52000+21026(1.5-1)	$(mc/I)_b$ = 62513
Determine $M_{allow\text{-}yield\text{-}PLASTIC}$	$M_{allow\text{-}yield\text{-}PLASTIC}$ =$(mc/I)_b$ (I/c) = 62513(0.0011576/0.105)	$M_{allow\text{-}yield\text{-}PLASTIC}$ = 689 in-lb
Calculate M.S. (end-pad)	MS = $(1.5M_{allow\text{-}Yield\text{-}PLASTIC})/m$ -1 = 1.5(689)/861-1	MS(end-pad)= <u>0.20 Yield-PLASTIC</u>
Calculate $f_{s\text{-}pullthru}$	$f_{s\text{-}pullthru} = P/(\pi D_{bolt\ head} tn)$ = 9291/(π•0.381•0.21•2 fasteners)	$f_{s\text{-}pullthru}$ = 18481 psi
Calculate M.S. (pull-thru)	MS = $F_{su}/(1.15f_{s\text{-}pullthru})$ -1 = 40000/[1.15(18481)]-1	MS(pull-thru)= <u>0.88 ULT</u>

In addition to these checks, the fastener margins would also need to be calculated per Section 5.2.3.3, 5.2.3.4 and 5.5.

Copyright 2017 Lockheed Martin Corporation.
Note: The current version is always the version on the Lockheed Martin network.

5.3.2 Shear Clip Analysis

Shear clips are used to transfer shear load from one part to another in applications such as a longeron's attachment to a bulkhead. It is not intended to transfer axial load, bending moment or twisting load. If any of these loads are present, additional load paths must be present such as splice straps or the shear clip must be replaced with a heavier fitting such as a bathtub type tension fitting or the clip should be analyzed as a tension clip per Section 5.3.5.2. When the loads in a part which is tied into adjacent structure using a shear clip are developed, simply supported end condition assumptions should be used to determine loads at the shear clip locations.

Shear clips are generally manufactured from formed sheet metal or light extrusions. They are often "L" angles or tees. If angles, they should have two fasteners in each flange to provide a load path for the secondary moments that develop. For a tee, a single fastener in each flange of the base is acceptable; however there should be two fasteners in the leg. Figure 5.3.2-1 illustrates some typical, acceptable shear clips. The analyst should be aware that the clips of Figure 5.3.2-1 can also be used to carry low primary tension loads. If this type of loading is present, the part should be analyzed per Section 5.3.5.2.

Single fastener shear clips are not allowed as they have short fatigue life due to the secondary bending.

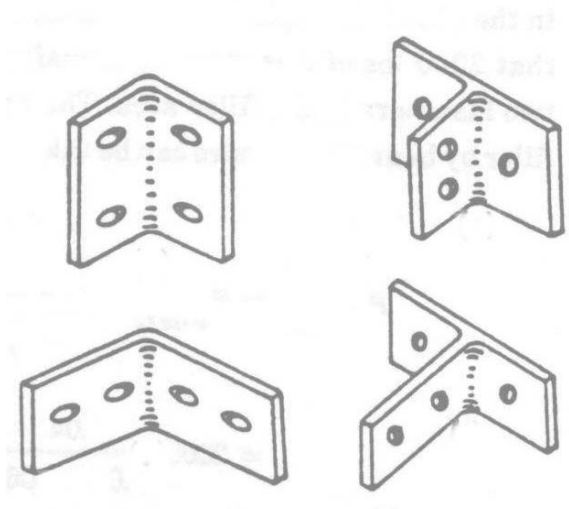

Figure 5.3.2-1 Acceptable Shear Clip Designs

To analyze a shear clip, a free-body diagram is made which assumes the corner carries only the shear load. A force balance of each half of the clip is made and the moments are taken by force couples in the fasteners. An example free body is shown in which the shear load results from attachment to the adjacent web. This is the load transferred at the corner of the shear clip as shown middle view of Figure 5.3.2-2 for the left half of the clip. Then each flange of the shear clip is balanced based on the applied load, V, at the corner and the geometry of the fasteners. Moments are taken out as a couple between the fasteners. This is shown in the bottom view of Figure 5.3.2-2 for the left half of the clip, where V is distributed equally between the two fasteners. The moment, Va, generates a horizontal force couple (Va)/s on the two fasteners. The other flange would be balanced in a similar fashion.

Copyright 2017 Lockheed Martin Corporation.
Note: The current version is always the version on the Lockheed Martin network.

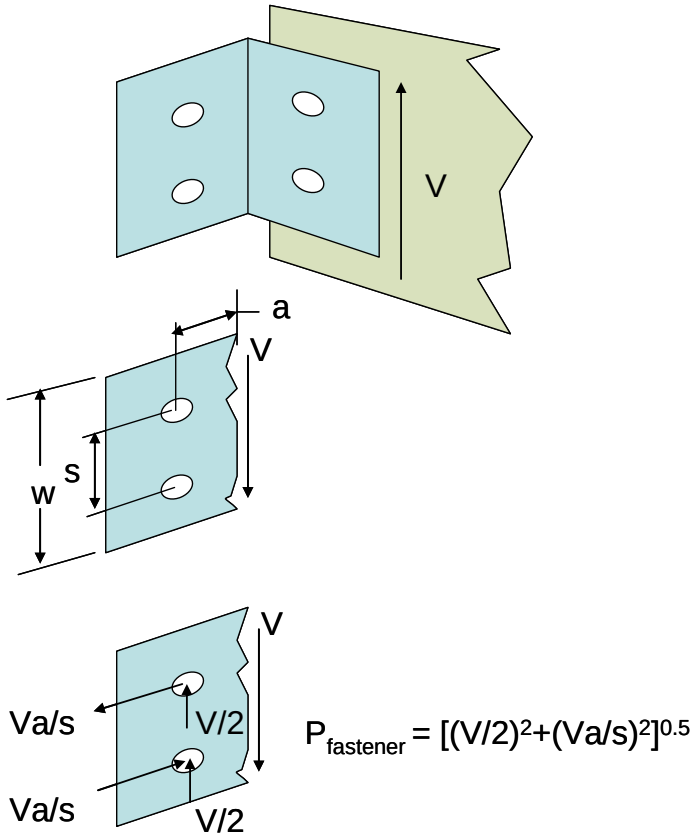

Figure 5.3.2-2 Typical Shear Clip Freebody with Fasteners Oriented Vertically

Once the free body is established, the clip is analyzed for the shear and bearing and the fastener for total fastener load. This example illustrates the approach. The clip in this example is a different configuration than the one illustrated in Figure 5.3.2-2 which will result in a different free-body diagram.

One other area of concern with angle shear clips concerns joggles. If the clip has a significant joggle on one flange to allow it to sit on a locally thicker mating surface as shown in Figure 5.3.2-3, this can cause additional twisting and moments to occur and the part may act as two separate angle fittings. The solution to this is to add an additional fastener or row of fasteners to react the resulting couple.

Copyright 2017 Lockheed Martin Corporation.
Note: The current version is always the version on the Lockheed Martin network.

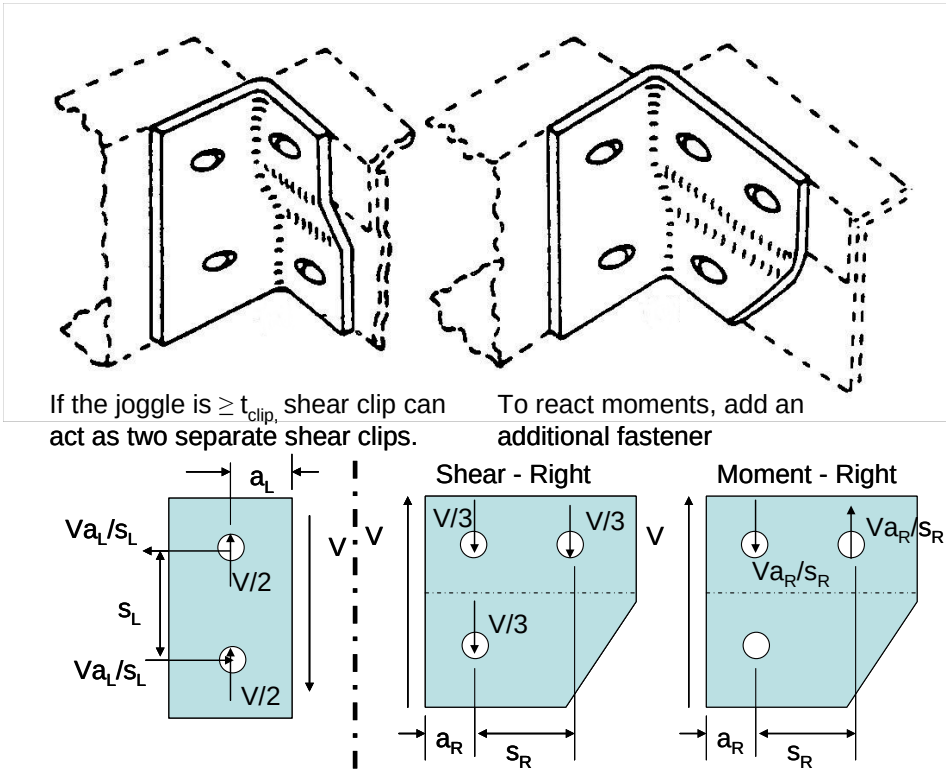

Figure 5.3.2-3 Example of Joggled Shear Clip with Free-body

5.3.2.1 Example Problem – Shear Clip Analysis

Given: Shear clip, as shown, with a 1000 lb applied load
Material: CLAD 2024T42 aluminum:
F_{su} = 35000 psi
F_{bru} (e/D=2.0) = 117000 psi
3/16 in dia fasteners.

What are the margins of Safety if the clip is 0.10 in thick?

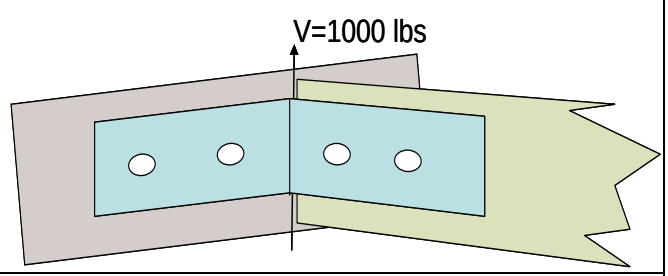

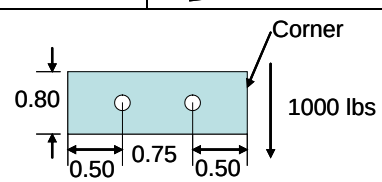

Typical Flange Geometry

Copyright 2017 Lockheed Martin Corporation.
Note: The current version is always the version on the Lockheed Martin network.

There are two fasteners in each flange which share equally in the shear load. $P_{vertical}$ = 1000/2 = 500 lbs.	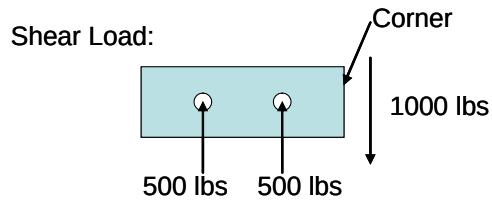 Left flange
To develop the force couple due to the moment, first develop the moment at the center of the fasteners: M=1000(0.50+0.75/2) = 875 in-lbs Form the force couple: F=M/s = 875/0.75 = 1167 lbs	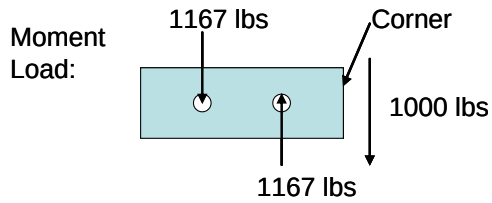 Left Flange
The total load is the vector sum of the two loads. In this case, because all loads are along the same axis, they are additive: P_1=1167-500 = 667 lbs P_2=1167+500 = 1667 lbs	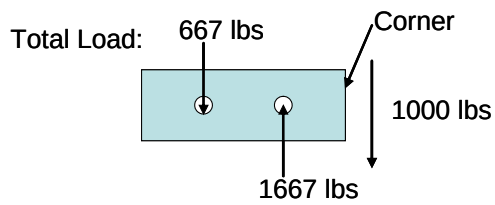 Left Flange
Determine Shear Stress and Margin of Safety for shear load:	f_s = 3/2(V/A) = 3/2[1000/(0.10•0.80)] = 18750 psi M.S.= 35000/18750-1 = <u>0.87</u>
Determine Bearing Stress and Margin of Safety for Bearing: For k_{br}: Reference PM4057, Section 3 Table 3.3.3-2	f_{br} = P/(Dt) = 1667/(0.189•0.10) = 88201 psi k_{br} = 0.10(2.0)+0.70 = 0.90 $F_{bru\text{-}allow} = k_{br}F_{bru}$ = 0.90(117000) = 105300 M.S. = 105300/[1.15(88201)] – 1 = <u>0.04</u>
Additionally a margin for fastener shear would be required. Note if the fastener pattern in the opposite flange is not mirrored, then a separate load balance based in its unique geometry would be required.	

5.3.3 Rod-End Analysis

Control rod ends are generally sharply necked lugs which differ in analysis technique from other lugs discussed in Section 5.4. The analysis methodology described in this section is taken from Reference5-7. The rim material between the pin and outer diameter is usually thinner than a conventional lug, as shown in **Figure 5.3.3-1**. In the rod end, from point 2 and to the right the lug acts in pure hoop tension. Point 1 is the rightmost location for Point 2, where the transition from hoop tension to curved beam behavior can occur. It is 90 degrees from the longitudinal axis of the lug. Between points 2 and 3, the lug behaves as a curved beam and point 3 is the point at which the rim is considered fixed to the shank. This is assumed to be at the center of the fillet radius. Figure 5.3.3-1 Section A provides a definition of the geometry variables.

It must be determined where point 2, the transition point between hoop tension and curved beam behavior occurs. The first step is to calculate the axial stiffness parameter, K, for the lug.

$$K = LI / (AR^3)$$ **Equation 5.3.3-1**

where
L is the length along the center of the lug, from Equation 5.3.3-5 (in)
I is the moment of inertia of the lug at Point 1 about the y-y axis of Figure 5.3.3-1 (in^4)
A is the area of the lug section at Point 1 (in^2)

Copyright 2017 Lockheed Martin Corporation.
Note: The current version is always the version on the Lockheed Martin network.

R is the radius of the lug at the centerline (in)

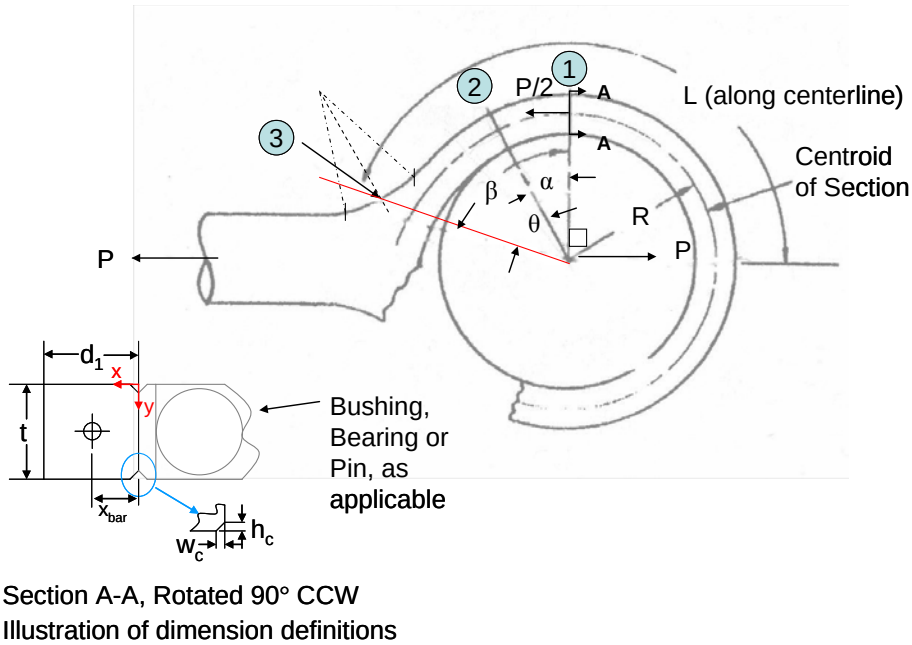

Figure 5.3.3-1 Rod-End Geometry

If a chamfer is present, as shown in Figure 5.3.3-1, then it must be accounted for in the area and moment calculations. The section properties for the section shown in Figure 5.3.3-1 can be calculated from

$$A = td_1 - w_c h_c$$ **Equation 5.3.3-2**

$$x_{bar} = {}^1\!/_2 \left(\frac{d_1^2 t - w_c^2 h_c}{t d_1 - w_c h_c} \right)$$ **Equation 5.3.3-3**

$$I_{y-y} = \frac{t}{3}\left[(d_1 - x_{bar})^3 + x_{bar}^3\right] - \frac{h_c w_c^3}{12} - h_c w_c \left(x_{bar} - \frac{w_c}{2}\right)^2$$ **Equation 5.3.3-4**

where
t is the thickness of the rod end lug (in)
d_1 is the width of the rod end lug (in)
h_c is the height of the chamfer, if present (in)
w_c is the width of the chamfer, if present (in)

The location of point 3 is at the midpoint of the arc between the two tangency points of the radius attaching the lug to the shank as shown in Figure 5.3.3-1. The section at point 3 is determined by a line connecting point 3 and the center of the rod-end circle. The centerline length, L is calculated from

$$L = \pi R(90 + \beta)/180$$ **Equation 5.3.3-5**

where
β is the angle from Point 1 to Point 3, **Figure 5.3.3-1**. (deg)

From Figure 5.3.3-1 the relationship between the angles β, θ, and α can be seen as

$$\beta = \theta + \alpha$$ **Equation 5.3.3-6**

where
β is the angle between point 1 and point 3 (deg). $\beta \leq 90$

Copyright 2017 Lockheed Martin Corporation.
Note: The current version is always the version on the Lockheed Martin network.

θ is the angle between the transition point (2) and the point where the lug is assumed fixed (3) (deg) $0 \le \theta \le \beta$
α is the angle between the point 1 and point 2. $0 \le \alpha < \beta$

An energy solution provides an alternative formulation for K in terms of the angles, β and θ

$$K=(-\cos\theta - \tfrac{1}{2}\sin^2\theta + 1)/\tan(\beta-\theta) - [(3/2)\theta - 2\sin\theta + \tfrac{1}{2}\sin\theta\cos\theta]$$ **Equation 5.3.3-7**

where all angles are in radians

To solve for θ and α, Equation 5.3.3-1 is solved for K, given the geometry of the lug. Then Equation 5.3.3-7 is solved with β, as measured from the part drawing and an assumed value for the angle θ. The angle θ is varied until the calculated value of K from Equation 5.3.3-7 matches the value of K from Equation 5.3.3-1. Once θ is determined, α can be calculated from Equation 5.3.3-6.

Figure 5.3.3-2 shows the geometric relationship of the loading in the rod-end lug. From the load application point to Point 2, the internal loading in the lug is carried in hoop tension. From Point 2 to Point 3 it is carried in beam bending.

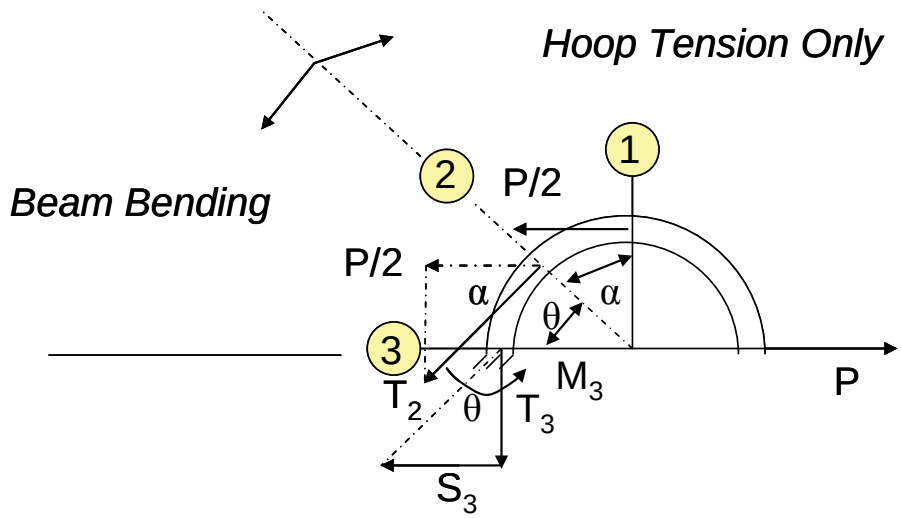

Figure 5.3.3-2 Rod-End Free-body Diagram

The loads in the rod-end at locations 2 and 3 can then be calculated from

$$T_2 = P/(2\cos\alpha)$$ **Equation 5.3.3-8**

$$T_3 = T_2\cos\theta$$ **Equation 5.3.3-9**

$$S_3 = T_2\sin\theta$$ **Equation 5.3.3-10**

$$m_3 = T_2R(1-\cos\theta)$$ **Equation 5.3.3-11**

where
P is the lug load in along the longitudinal axis of the lug (lbs)
α is the angle between Point 1 and Point 2 (deg)
θ is the angle between Point 2 and Point 3 (deg)
T_2, T_3 are the hoop tension loads in the lug at Points 2 and 3, respectively(lbs)
S_3 is the shear load at Point 3 (lbs)
m_3 is the bending moment at Point 3 (in-lbs)

Copyright 2017 Lockheed Martin Corporation.
Note: The current version is always the version on the Lockheed Martin network.

Once the loads are determined, stress analysis of critical sections can be performed. The critical section is generally at Point 3 where the section undergoes axial, bending and shear loads. However, the minimum section undergoing hoop loading should also be checked. Thus, at Point 2, the tension stress can be calculated as

$$f_{t,2} = T_2/A_2 \qquad \textbf{Equation 5.3.3-12}$$

where
T_2 is the hoop tension load from Equation 5.3.3-8 (lbs)
A_2 is the area of the section from Equation 5.3.3-2 at Point 2 or any other minimum area location within the hoop tension portion of the rod end(in^2)

The margin can be calculated from

$$M.S. = F_{tu}/(K_{ftg} f_{t,2}) - 1 \qquad \textbf{Equation 5.3.3-13}$$

where
Ftu is the ultimate tensile strength of the rod end material from Reference 3-4 or other suitable reference (psi)
$f_{t,2}$ is the tensile stress calculated from Equation 5.3.3-12 (psi)
K_{ftg} is the appropriate, program approved fitting factor. See Section 5.4.1 for discussion.

At Point 3, the stresses can be calculated from

$$f_{t,3} = T_3/A_3 \qquad \textbf{Equation 5.3.3-14}$$

$$f_s = S_3/A_3 \qquad \textbf{Equation 5.3.3-15}$$

where
T_3 is the tension load from Equation 5.3.3-9 (lbs)
S_3 is the shear load from Equation 5.3.3-10 (lbs)
A_3 is the area of the section from Equation 5.3.3-2 at Point 3 (in^2)

The stress ratios at Point 3 can be calculated as

$$R_t = K_{ftg} f_{t,3} / F_{tu}$$
$$R_s = K_{ftg} f_s / F_{su} \qquad \textbf{Equation 5.3.3-16}$$
$$R_b = K_{ftg} m_3/M_{allow}$$

where
f_t, f_s are the tension and shear stress at Point 3 calculated from Equations 5.3.3-14 and 5.3.3-15 , respectively.
F_{tu} ,F_{su} are the ultimate tensile and shear strengths of the rod end material from Reference 3-4or other suitable reference (psi)
m_3 is the applied bending moment at Point 3 from Equations 5.3.3-11
M_{allow} is the allowable bending moment about y-y, calculated per Section 6.3.3 if chamfered and Section 6.3.2 if not chamfered (in-lb)
K_{ftg} is the appropriate, program approved fitting factor. See Section 5.4.1 for discussion.

The margin of safety can be calculated using the approach outlined in Section 6.3.6.4 for combined stresses; however, a simplified and conservative margin can be obtained from

$$M.S. = \frac{1}{\sqrt{(R_t + R_b)^2 + R_s^2}} - 1 \qquad \textbf{Equation 5.3.3-17}$$

The final check for the rod-end is a bearing check of the lug. This analysis is performed in the same manner as the bearing check for standard lugs which is detailed in Sections 5.4.2.1 and 5.4.3.1. If the rod-end has a bushing, it should be analyzed per Section 5.2.5 and the pin should be analyzed per Section 5.4.3.7.

Copyright 2017 Lockheed Martin Corporation.
Note: The current version is always the version on the Lockheed Martin network.

5.3.4 Beam-in-a-Socket Analysis

When a fastener/pin acts in a hole, there are several possibilities for the bearing load distribution depending on the torque on the fastener, fit of the fastener/pin in the hole and the relative stiffness between the fastener/pin and the joint material as shown in **Figure 5.3.4-1**. This distribution can result in the bending moment and shear in the pin peaking at levels higher than the applied moment and shear. The method used for this analysis is referred to as a "beam-in-a-socket" or "pin-in-a-socket" analysis.

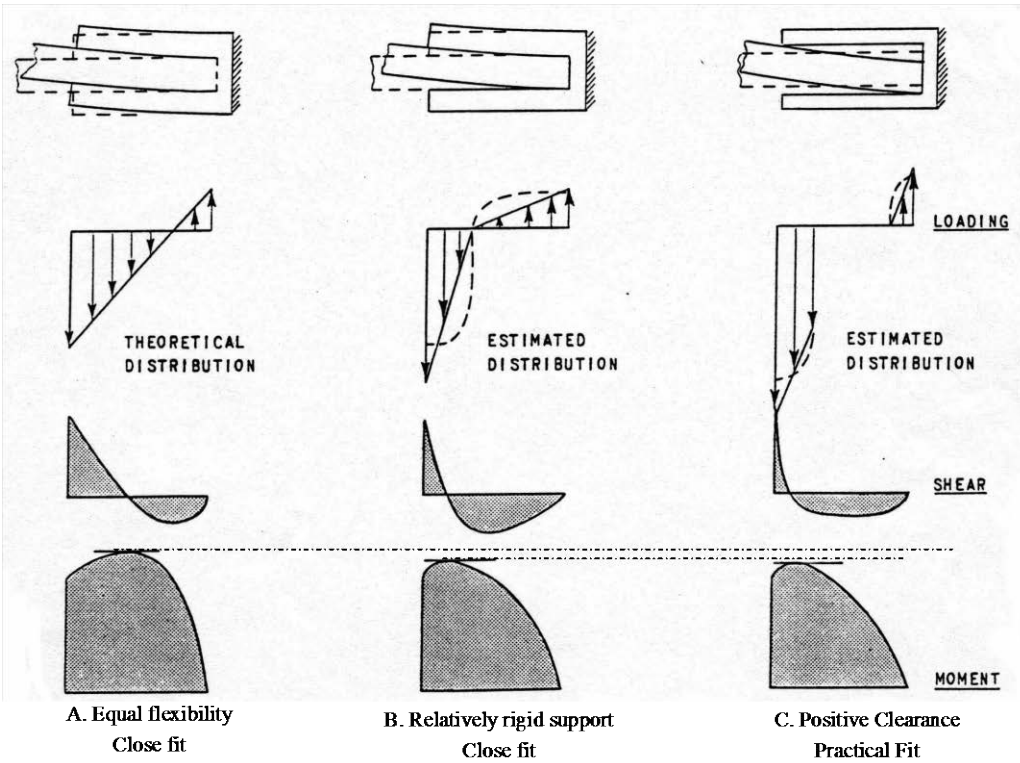

Figure 5.3.4-1Beam-In-A-Socket Shear and Moment Distributions

The maximum bearing load per inch corresponding to the load distribution of Figure 5.3.4-1A can be determined and then can conservatively be used for the more practical applications shown in Figure 5.3.4-1 B and C since under these conditions the loading peaks are rounded off, as indicated by the dotted lines, due to localized plastic deformations.

The maximum moment obtained by this method for the condition depicted in Figure 5.3.4-1A tends to be conservative for the load distributions of both B and C, however the maximum shear corresponding to Figure 5.3.4-1A tends to be conservative only for the distribution of C. Figure 5.3.4-3 depicts the bending moment, shear and running loads through the thickness of the joint.

While this method is often used for the analysis of a pin in a lug and clevis attachment, it can also be used for the design of a piston in a shock strut as shown in Figure 5.3.4-2. In this case, raised bearing surfaces on the piston should be used in preference to a uniform cylindrical section because of ease of assembly and the distribution of moment can be accurately determined since it is taken out as a couple on the bearing surfaces. It should not be used in the case of a torqued fastener in a joint as the fastener head and tail can react all or part of the bending moment. The exception would be if the total joint stack-up divided by diameter ratio, t_{total}/D, of the joint is above 4 when the fastener, even if torqued, behaves more as a pin-in-a-socket.

Copyright 2017 Lockheed Martin Corporation.
Note: The current version is always the version on the Lockheed Martin network.

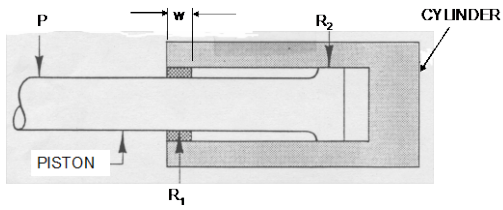

Figure 5.3.4-2 Shock Strut Illustration

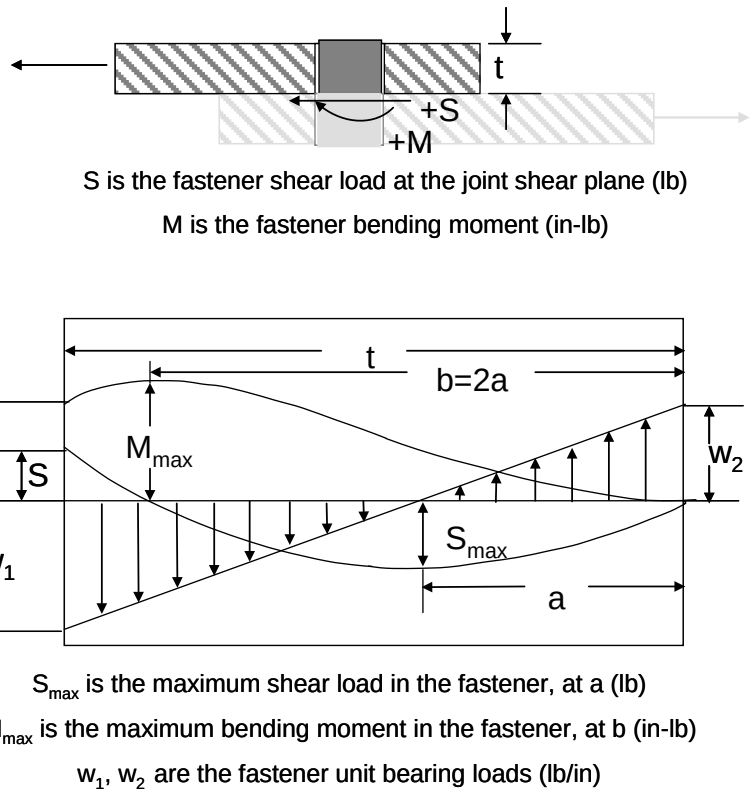

Figure 5.3.4-3 Assumed Beam-in-a-Socket Through the Thickness load Distributions

To cover the entire range of load/geometry possibilities, the method is formulated in terms of St/M and M/(St), each ranging between -1.0 and 1.0. Table 5.3.4-1 provides the equations for the calculation of maximum moment and shear in terms of St/M and is valid for St/M between -1.0 and 1.0.

Copyright 2017 Lockheed Martin Corporation.
Note: The current version is always the version on the Lockheed Martin network.

Table 5.3.4-1 Beam-in-a-Socket Parameters For -1.0 ≤ St/M ≤1.0

Calculate	Equation[16]	Units
St/M	(St)/M	--
K_1	K_2+2(St)/M	--
K_2	2[3+(St)/M]	--
K_a	(1/3)[3+(St)/M]/[2+(St)/M]	--
K_s	[3+(St)/M]K_a	--
K_m	(4/3)K_aK_s	--
w_1	K_1M/t^2	lb/in
w_2	K_2M/t^2	lb/in
a	K_at	in
S_{max}	$-K_sM/t$	lbs
M_{max}	K_mM	in-lbs

where
M is the external moment, or in the case of the joint depicted in Figure 5.3.4-3, the moment at the joint faying surface (in-lb)
S is the applied shear load (lbs)
t is the thickness of the joint layer being analyzed or the length of the socket over which the moment is being reacted (in)

Table 5.3.4-2 provides the equations for the calculation of maximum moment and shear in terms of M/(St) and is valid for M/(St) between -1.0 and 1.0, although some of the parameters calculated produce maximum moment and shear values which are less than the applied moment and shear values within this range. This is noted in the table.

Table 5.3.4-2 Beam-in-a-Socket Parameters for -1.0 ≤ M/St ≤1.0

Calculate	Equation	Units	Restrictions/Comments
M/(St)	M/(St)	--	
K_1	K_2+2	--	
K_2	2[3M/(St)+1]	--	
K_a	(1/3)[3M/(St)+1]/[2M/(St)+1]	--	Not valid: -0.3334 > M/(St) > -0.6667
K_s	[3M/(St)+1]K_a	--	Not valid: -0.3334 > M/(St) > -0.6667
K_m	(4/3)K_a K_s	--	Valid for M/(St) ≥ -0.3334
w_1	K_1(S/t)	lb/in	
w_2	K_2(S/t)	lb/in	
a	K_at	in	Location of maximum shear. If -0.3334 > M/(St) > -0.6667, resulting a is either negative or greater than t.
S_{max}	$-K_sS$	lbs	For 0.472 > M/(St) > -0.3334, $-K_sS < S$
M_{max}	K_mSt	in-lbs	Valid for M/(St) ≥ -0.3334; however, for -0.078 > M/(St) > -0.3334, $K_mSt < M$

where
M is the external moment, or in the case of the joint depicted in Figure 5.3.4-3, the moment at the joint faying surface (in-lb)
S is the applied shear load (lbs)
t is the thickness of the joint layer being analyzed or the length of the socket over which the moment is being reacted (in)

Figure 5.3.4-3 provides a graphical representation of K_a, K_s, and K_m as a function of both M/(St) and (St)/M.

[16] See Reference 5.2-7, SM41 for derivation of formulae.

Copyright 2017 Lockheed Martin Corporation.
Note: The current version is always the version on the Lockheed Martin network.

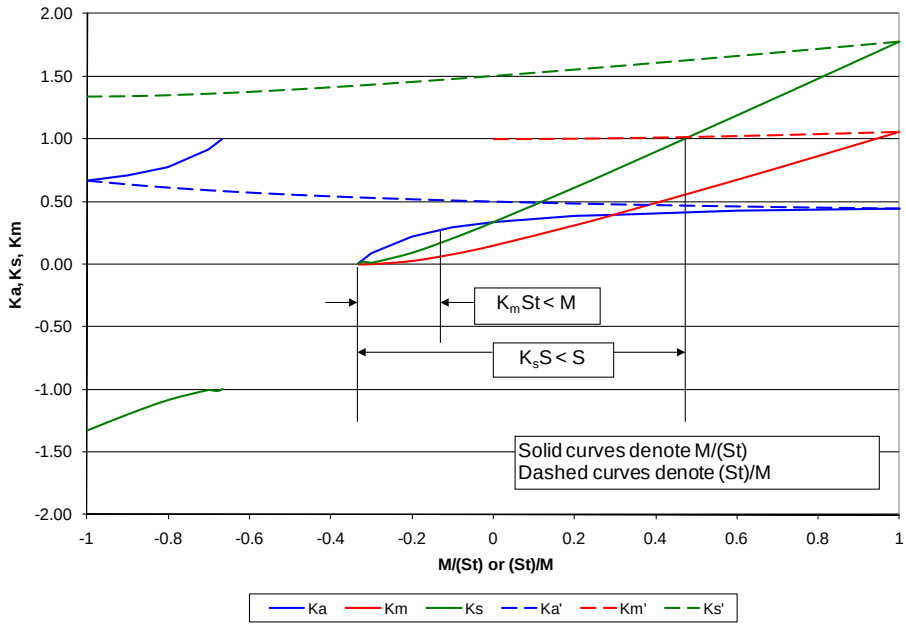

Figure 5.3.4-4 Beam-in-a-Socket Parameters K_a, K_s, and K_m for -1.0 < M/(St) < 1.0 (Solid) and -1.0 < (St)/M < 1.0 (Dashed)

The program, SS_JOINT, of the tool suite IDAT performs a beam-in-a-socket analysis although the formulation is slightly different. This tool is automatically used in support of IDAT/IBOLT and IDAT/SFBOLT fatigue analysis.

5.3.5 Flange Bending Strength

Pull-off loads in airframe structure are typically induced by pressure loading due to air, dry bay or fuel pressure on an adjacent web or skin or they may be a result of a concentrated discrete load applied to a tension clip. Depending on the source of the applied loading, the tension loads which must be reacted by the flange may be magnified due to a heel-toe effect which is a result of a prying load between a skin flange and its back-up structure, *i.e.*, the tension fitting. This tension-compression couple results from the geometry and load on the attaching structure. The derivation of loads due to heel-toe is shown in Section 5.3.6. For the purposes of discussion of the analysis of the tension fitting, it is assumed that the running load, N_y, in the web of the tension fitting is known.

There are two analysis methods commonly used for flange pull-off which are described in this section. These methods have relative degrees of conservatism and a number of limitations. Methods are presented here for several configurations. Additionally a FEA based analysis could be performed.

When a tension load is applied normal to the outstanding leg of long flange, care must be taken to properly size the fasteners to achieve the correct diameter, location and spacing to optimize the strength of the joint. It is recommended that the diameter be appropriate to achieve a t/D of 0.35 to 0.45 using the thickness of the flange only. The fastener spacing should be between 4D and 6D to ensure there is sufficient material at the juncture of the legs so that there isn't a peaking from overlapping stress fields and the fasteners should be as close to the radius as possible to shorten the moment arm and reduce the bending stresses.

Flange bending is often more critical under the repeated loads associated with fatigue cycling than for static loading. This is a result of the open-close action of the out-of-plane loading on the flange. Because of this and deflection and permanent set concerns, flange bending should never be used for the transfer of primary single load path loads.

Copyright 2017 Lockheed Martin Corporation.
Note: The current version is always the version on the Lockheed Martin network.

The following is a list of design guidelines which have proven to result in robust designs:

- Corner fillets of extruded or machined angles should be larger of the average thickness of the two flanges or 0.13 inch.
- Minimum bend radii should be used for formed sheet metal angles.
- For maximum strength the bolt head, nut or tension-rated washer outer diameter should be adjacent to the point of tangency of the fillet or bend radius. For formed tails, they may overlap the tangency slightly. As the bolt moves away from the point of tangency, the joint becomes more flexible.
- For fatigue considerations, angle joints should not be used in applications subject to frequent application of maximum design or near-limit loads.
- Backup structure for the angle should be of similar or greater strength and stiffness.
- If shear loads are present, there shall be at least 2 fasteners per flange. See Section 5.3.2 for further discussion.

5.3.5.1 Classical Flange Bending Analysis

The first method is a simple beam bending analysis. A typical flange is depicted in **Figure 5.3.5-1**. The free-body diagram is shown in Figure 5.3.5-2. It is assumed the pulloff loading is applied through the web and may be the result of a directly applied load either to the flange or to the web. This load in the fastener is reacted back to the supporting flange through a cantilever attachment.

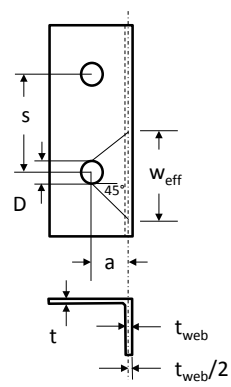

Figure 5.3.5-1 Geometry for Flange Bending Calculation

The effective length of the base of the beam is given by

$$w_{eff} = minimum(s, 2a+D)$$ **Equation 5.3.5-1**

where
s is the fastener spacing (in)
a is the distance from the fastener centerline to the flange mid-thickness ($t_2/2$)(in)
D is the diameter of the fastener hole (in)

Point A is typically the critical location. The moment is not checked at the centerline of the fastener hole since the fastener/washer/nut clamp-up at the hole stabilizes the edge of the hole. It is assumed the benefit from the clamp-up reduces the moment arm from dimension *a* to dimension d_A as shown in the free-body of Figure 5.3.5-2. A second possibly critical location for DADT is at Point B, just outside of the radius, where a K_t exists.

Copyright 2017 Lockheed Martin Corporation.
Note: The current version is always the version on the Lockheed Martin network.

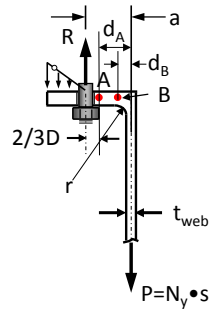

Figure 5.3.5-2 Free-Body of Angle Fitting

The moment arms d_A and d_B are calculated as

$$d_A=a-2/3D$$
$$d_B=t_{web}/2+r \qquad \textbf{Equation 5.3.5-2}$$

where
a is the distance from the centerline of the hole to the centerline of the web (in)
D is the fastener diameter (in)
t_{web} is the web thickness (in)
r is the fillet radius (in)

The pull-off load is the running load in the web times the fastener spacing

$$P=N_y s \qquad \textbf{Equation 5.3.5-3}$$

where N_y is the running load in the web (lb/in)

The bending moment, m, is the pull-off load, *P*, multiplied by the moment arm, *d*, is calculated as

$$d=maximum(d_A, d_B)$$
$$m=Pd \qquad \textbf{Equation 5.3.5-4}$$

where
P is the applied pull-off load (lb)
d_A is the distance from the mid-thickness of the flange to Point A from Equation 5.3.5-2 (in)
d_B is the distance from the mid-thickness of the flange to the outside edge of the radius from Equation 5.3.5-2 (in)

If an elastic analysis is desired, the allowable moment is calculated using the material ultimate strength as

$$M_{allow\text{-}ultimate} = F_{tu}(w_{eff}\, t^2)/6 \qquad \textbf{Equation 5.3.5-5}$$

where
F_{tu} is the material ultimate strength from Reference 5-4 (psi)
w_{eff} is the effective width from Equation 5.3.5-1 (in)
t is the thickness of the flange being analyzed (in)

Alternately, a plastic bending allowable moment may be calculated from the modulus of rupture per Section 6.3.2 for the symmetric, rectangular cross section represented by the flange of width, w_{eff}, and thickness, t_1,using a section factor, *k*, of 1.5.

The shear in the flange is calculated from

$$f_s = \frac{3}{2} \cdot \frac{P}{w_{eff}\, t} \qquad \textbf{Equation 5.3.5-6}$$

where
P is the pull-off load from Equation 5.3.5-3 (in)
w_{eff} is the effective flange width from Equation 5.3.5-1 (in)

Copyright 2017 Lockheed Martin Corporation.
Note: The current version is always the version on the Lockheed Martin network.

t is the flange thickness (in)

The stress ratios in bending and shear can then be calculated as

$$R_b = m/M_{allow\text{-}ultimate}$$
$$R_s = f_s/F_{su}$$

Equation 5.3.5-7

where
$M_{allow\text{-}ultimate}$ is the allowable bending moment (in-lb) from the modulus of rupture or from Equation 5.3.5-5
m is the applied bending moment per Equation 5.3.5-4 or Equation 5.3.5-9 (in-lbs)
f_s is the applied shear stress calculated from Equation 5.3.5-6 or Equation 5.3.5-10 (psi)
F_{su} is the temperature corrected shear ultimate material property (psi)

The margin of safety can be written by combining these ratios with any other stresses present in the flange per Section 6.3.6.

A tension fitting may also take on the shape of a tee-section and a similar approach is used. This is depicted in Figure 5.3.5-3

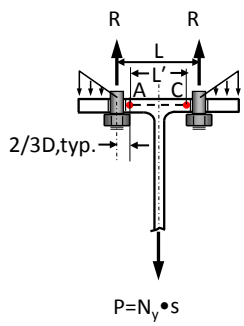

Figure 5.3.5-3 Free-body of Tension Tee Clip

The flange of the tee clip is analyzed as a fixed-fixed beam of length L', where the endpoints, A and C, are defined in a manner similar to Point A of the angle discussed above. Section 5.3.6 goes into more detail about the assumptions associated with this free-body selection. L' is calculated as follows

$$L' = L - 2 \cdot \frac{2}{3} D$$

Equation 5.3.5-8

where
L is the length of the flange between fastener centerlines (in)
D is the diameter of the fastener (in)

The end moments of a fixed-end beam can be obtained by free-body diagram or from Table 6.2.1-9 Case FF-1. For the case where the load is applied at the center of the flange, $a=b=L'/2$, Case FF-1 simplifies to

$$m = \frac{PL'}{8}$$

Equation 5.3.5-9

where
P is the applied load from Equation 5.3.5-3 (in)
L′ is the length of the flange defined in Equation 5.3.5-8 (in)

If the flanges are of equal thickness, each flange reacts half of the applied load, P/2, and the shear stress can be written as

$$f_s = \frac{3}{2} \cdot \frac{P}{2w_{eff}t} = \frac{3}{4} \cdot \frac{P}{w_{eff}t}$$

Equation 5.3.5-10

where
w_{eff} is the effective flange width from Equation 5.3.5-1 (in)
t is the flange thickness (in)

Copyright 2017 Lockheed Martin Corporation.
Note: The current version is always the version on the Lockheed Martin network.

Note that if the flanges are of difference thickness, the shear should be split in accordance with the ratio of the flange thickness to the sum of both flange thicknesses.

The applied moment, Equation 5.3.5-9 and shear stress, Equation 5.3.5-10 can be used along with the allowable moment of Equation 5.3.5-5 or based on the modulus of rupture to calculate the stress ratios of Equation 5.3.5-7. From those, the margin of safety per Section 6.3.6 can be calculated.

5.3.5.2 Empirical Flange Bending Analysis – Tension Clips

Another approach for calculating the flange bending allowable is one based on testing of various flange configurations by Lockheed and has been previously published in Reference 5-1, SM89 and Reference 5-2, pg 14.5.1. The Reference 5-13 section on SM89 provides a summary of test data and method development. This approach requires that the reaction side of the joint is at least as stiff as the side being analyzed to allow flange fixity to develop at the fastener line.

The ultimate allowable angle load for formed sheet metal angles was derived by testing a number of angles of varying length and fastener spacing. From the load-deflection plots, the load at 0.005-inch permanent set was obtained. The failure load was defined as 1.5 times the load which resulted in 0.005-inch permanent set. Failure load was plotted as a function of the thickness squared divided by the distance from the fastener hole centerline to the faying surface of the attach flange, c. A best fit line was drawn through this data. Through testing of different materials it was determined that this curve could be adjusted for other materials through the use of the relative transverse yield strength of the material tested and the material desired, so for this manual the equation has been reformulated in general terms for use with any materials except magnesium alloys. The geometry is shown in Figure 5.3.5-4A.

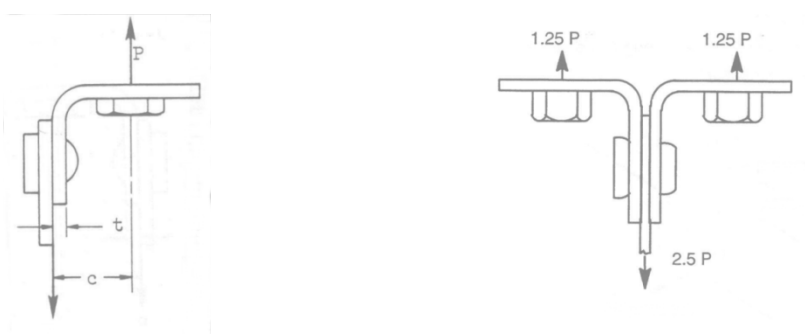

A B

Figure 5.3.5-4 Formed Angle Geometry for Flange Bending Calculation

The reformulated relationship is given by Equation 5.3.5-11.

$$P_{allow} = 0.67125\ F_{ty\text{-}T}\ (t^2/c)$$ **Equation 5.3.5-11**

where
$F_{ty\text{-}T}$ is the yield stress in the transverse direction (psi)
t is the thickness of the flange (in)
c is the distance from the center of the hole to the back face of the downstanding leg (in).
P_{allow} is allowable load per fastener for fastener spacing ≥ 1.0 in (lbs)
P_{allow} is allowable load per inch if fastener spacing is <1.0 in (lbs/in)

Testing was also performed with formed angles attached back to back as shown in Figure 5.3.5-4B. It was shown that there was a significant improvement over the load carrying capability of the single angle shown in Figure 5.3.5-4A if loaded symmetrically. Allowables developed from Equation 5.3.5-11 may be multiplied by 2.5 for back-to-back angles loaded symmetrically.

Copyright 2017 Lockheed Martin Corporation.
Note: The current version is always the version on the Lockheed Martin network.

An equation for extrusions was developed in a similar fashion using pull-off test data of extruded angles. The geometry is provided in Figure 5.3.5-5. Note that the angle or tee may be mechanically fastened as is shown in the top figures of Figure 5.3.5-5 or they may be integrally machined as is shown in the bottom figures of Figure 5.3.5-5. This results in a change of where P is applied on the down standing leg from the faying surface to the centerline of the part.

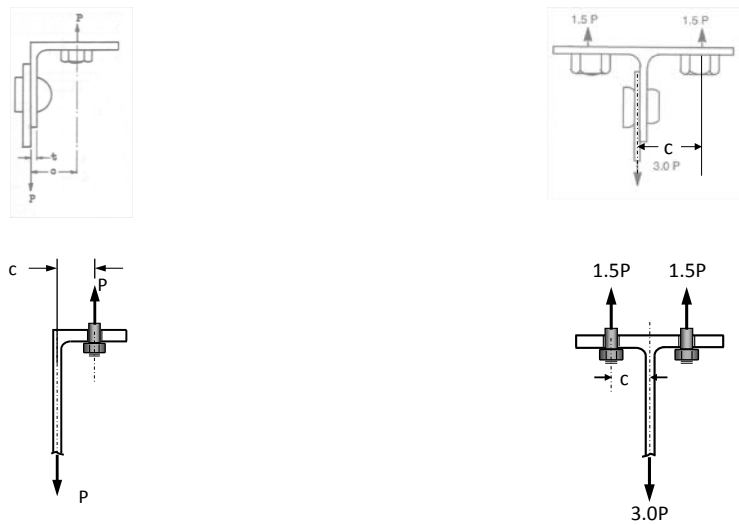

Figure 5.3.5-5 Extruded Angle Geometry for Flange Bending Calculation

The reformulated, material-independent form of the equation is given by Equation 5.3.5-12. Again this equation is not valid for magnesium alloys.

$$P_{allow} = 0.5929\, F_{ty\text{-}T}\, (t^2/c)$$ **Equation 5.3.5-12**

where
$F_{ty\text{-}T}$ is the yield stress in the transverse direction (psi)
t is the thickness of the flange (in)
c is the eccentricity distance shown in Figure 5.3.5-5 (in)
P_{allow} is allowable load per fastener for fastener spacing ≥ 1.0 in (lbs)
P_{allow} is allowable load per inch if fastener spacing is <1.0 in (lbs/in)

Testing was also performed of an extruded Tee as shown in Figure 5.3.5-5B (Top). It was shown that there was a significant improvement over the load carrying capability of the single extruded angle shown in Figure 5.3.5-5A (Top). Allowables developed from Equation 5.3.5-12 may be multiplied by 3.0 for an extruded tee loaded symmetrically.

5.3.6 Prying Loads Analysis – Development of Fastener Loads

For pressurized skins attached to substructure, prying loads can develop at the attachment points. This is often referred to as heel-toe behavior resulting in the tension loads in the fastener being greater than the applied load. There is also a load which is bearing down on the flange due to the draping effect of the skin. These loads are pictured in Figure 5.3.6-1 for an angle with a single row of fasteners.

Copyright 2017 Lockheed Martin Corporation.
Note: The current version is always the version on the Lockheed Martin network.

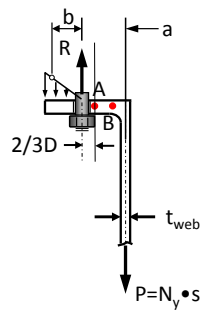

Figure 5.3.6-1 Prying Load Free-Body for Angle and Tee Sections

First examining the angle, if a summation of moments about the centroid of the load bearing on the flange is performed, the tension load in the fastener, R can be determined.

$$P(a+b)-Rb=0$$

$$R=P(a+b)/b \qquad \textbf{Equation 5.3.6-1}$$

where
P is the applied web load (lbs)
a is the distance from the centerline of the web to the centerline of the fastener (in)
b is the distance from the centroid of the triangular distribution of the bearing reaction (in)

From this, it can be seen that the tension load in the flange fastener is *(a+b)/b* times greater than the applied tension load. The fastener load given by Equation 5.3.6-1 can be combined with other loads for the fastener due to in-plane loading and a fastener analysis performed per Section 5.2.3.

Loads can also be developed for a tee section with a single row of fasteners in each flange. The free body is shown in Figure 5.3.6-2. The figures on the left shows the physical section and the idealized beam used in analysis. The problem is solved by superposition of the two beams shown on the right.

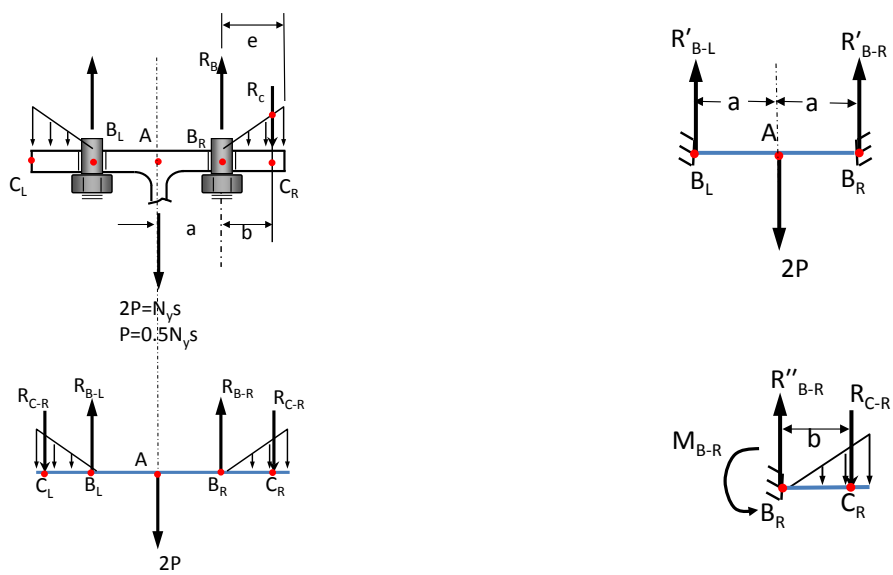

Figure 5.3.6-2 Free-Body of Prying Loads for Tee-Section with Single Row of Fasteners in Each Flange

Copyright 2017 Lockheed Martin Corporation.
Note: The current version is always the version on the Lockheed Martin network.

First, examine the beam from Point B_L to B_R, shown in the upper right picture of Figure 5.3.6-2. This beam is analyzed as a fixed-ended beam. Its length is 2b and the applied load at the center of the beam is 2P.

$$2P=N_y s$$
$$P=\tfrac{1}{2}N_y s \qquad \textbf{Equation 5.3.6-2}$$

where
N_y is the running load applied to the down-standing leg of the tee (lb/in)
s is the fastener spacing (in)

Because of the symmetry of the beam and the central loading, the fastener reactions R'_{B-L} and R'_{B-R} are equal and can be determined for this portion of the beam by summation of forces as

$$\Sigma F=0:\ R'_{B-L}+R'_{B-R}-2P = 0$$
$$R'_{B-L}=R'_{B-R}=2P \qquad \textbf{Equation 5.3.6-3}$$

where
R'_{BL}, R'_{BR} are the fastener loads due to the applied load (lb)
P is the load applied to the downstanding leg of the tee from Equation 5.3.6-2

The end moments of a fixed-end beam, at Points B_L and B_R, can be obtained by free-body diagram or from Table 6.2.1-9 Case FF-1. For the case where the load is applied at the center of the flange, $L=2a$, Case FF-1 simplifies to

$$m_{B-R} = -m_{B-L} = \frac{WL}{8} = \frac{2P \cdot 2a}{8} = \frac{Pa}{2} \qquad \textbf{Equation 5.3.6-4}$$

where
a is the distance from the centerline of the tee section's downstanding leg to the centerline of the fastener (in)

To determine the heel-toe reactions, the beams from Points B_R to C_R and B_L to C_L, will be analyzed as fixed-free beams. Due to symmetry, loads derived for one applies to the other. Focusing on the right end as illustrated in the lower right picture of Figure 5.3.6-2 R, the end moment at the fastener derived from beam B_L to B_R will be reacted as a couple between the fastener and a triangularly distributed load between the fastener and the end of the beam. This distributed load will peak at the end of the beam as shown. A point reaction, R_{C-R}, is shown at the centroid of the distributed reaction, replacing the triangular distribution for the calculations.

The moment at the fastener, calculated in Equation 5.3.6-4 can be used to determine the reaction R_{C-R}. A summation of moments at B is given as

$$\Sigma M_B=0:\ +m_{B-R}-R_{C-R}\bullet b=0$$
$$R_{C-R}=m_{B-R}/b=\tfrac{1}{2}Pa/b$$
$$\text{By symmetry, } R_{C-L}=R_{C-R}=\tfrac{1}{2}Pa/b \qquad \textbf{Equation 5.3.6-5}$$

where
m_{B-R} is the moment at the fastener calculated using Equation 5.3.6-4 (in-lb)
b is the distance from the centerline of the fastener to the centroid of the triangular distribution reaction (in)

A summation of forces can be used to determine the additional reaction at the fastener due to the prying load as

$$\Sigma F=0:\ -R_{C-R}+R''_{B-R}= 0$$
$$R''_{B-R}=R_{C-R}=\tfrac{1}{2}Pa/b$$
$$R_{B-R}=R'_{B-R}+R''_{B-R}=P+\tfrac{1}{2}Pa/b \qquad \textbf{Equation 5.3.6-6}$$

$$\text{By symmetry, } R_{B-L}=R_{B-R}= P+\tfrac{1}{2}Pa/b \qquad \textbf{Equation 5.3.6-7}$$

where
R'_{BR} is the fastener loads due to the applied load, from Equation 5.3.6-3 (lb)
R''_{BR} is the additional fastener load due to heel-toe reaction (lb)
P is the load applied to the down-standing leg of the tee from Equation 5.3.6-2

Copyright 2017 Lockheed Martin Corporation.
Note: The current version is always the version on the Lockheed Martin network.

The fastener load given by Equation 5.3.6-7 can be combined with other loads for the fastener due to in-plane loading and a fastener analysis performed per Section 5.2.3.

There are two heel-toe distributions illustrated in this section – an angle and a tee section; however, there are other combinations of geometry and fastener rows that can lead to other free-body balances of the joint. These can be derived in a similar fashion using a free-body analysis. Additionally, IDAT/FLANGE has a number of standardized sections built in including several with multiple rows of fasteners. FLANGE provides an FEA-based nonlinear flange bending solution for the specialized case of a pressure loaded substructure flange attached to a pressurized skin. The output includes internal forces and moments for each of the structural components as well as the fastener. It does not perform a margin of safety calculation. More information can be obtained on the solution approach and details of the analysis from the IDAT/FLANGE user's guide.

Copyright 2017 Lockheed Martin Corporation.
Note: The current version is always the version on the Lockheed Martin network.

5.4 Lug and Clevis Fittings

5.4.1 Introduction

Lug and clevis fittings are a specialized forms of fitting in which all load is transferred through a single fastener in shear. Because of the high concentration of load and potentially catastrophic results if failure occurs, there are recommended fitting factors for use in the design which are outlined in the various sources. These factors are recommended for fittings whose strengths are not proven in ultimate load tests. Program or customer specific guidelines, however, govern the use of these fitting factors. A fitting factor of 1.15 is often required for lug joints due to the many uncertainties which exist due to the stress distributions within the fitting. Manufacturing tolerances are generally such that the bolt within a pattern rarely fit the holes perfectly and small variations in the dimensions may affect the distributions.

Factor	Limit or Ultimate	Description	When recommended
1.15	Ultimate, or both, when required by program	Joint fitting factor	Recommended for joints not subject to static ultimate load testing of critical condition.
1.20	Both	Lug Service factor (LF)	Recommended for aircraft which are intended for long service lives to accommodate field repairs due to wear or corrosion which are not accounted for in fatigue or fracture analysis. This is particularly important on lugs which are an integral part of a larger structural item.
2.0	Both	Dynamic Factor (DF)	Applicable to situations where there is a rotational movement between the pin and bushing. All lugs which rotate on a pin should be bushed. The dynamic factor is applicable to both bushing analysis and pin analysis[1]. In the absence of a bushing, factor should be applied to the lug analysis.
K_{ftg}, $K_{ftg\text{-}limit}$ = Product of all applicable factors			

Program or customer specific guidelines govern the use of these or other fitting factors.

Other design and analysis considerations include

- A lug/clevis joint is generally sized to accommodate a repair bushing of minimum 0.063 wall thickness if there is no bushing installed in the baseline design. This is to prevent expensive and time consuming in-service repairs.
- There is no intentional slop designed into a lug fitting because this can result in dynamic loading on the fitting and pin.
- A bending check of the critical section of the clevis is performed using an out of plane load which is 10% of the in-plane load and any additional moments generated due to the clamp up forces for a gap between the clevis and the lug. For single shear lug/clevis designs, this side load would be applied to both the lug and the clevis.
- Lug/clevis joints should be symmetric in both geometry and loading.
- This methodology does not adequately analyze lug or clevis fittings which have a reduced width behind the pin, i.e. lollipop or necked lugs. This type of design has excessive deflection and can fail prematurely due to the lack of material. Section 5.3.3 provides an analysis of this geometry.
- Clevis clamp-up should be avoided, if possible, through the use of a shoulder bolt and cotter pin rather than a torqued bolt/nut combination.
- The lug and clevis should be at least as strong as the bolt or pin.

[1] When a bolted joint is subject to relative rotation the bolt tends to hammer back and forth in the hole. The hammering may enlarge the holes enough to cause early failure.

Copyright 2017 Lockheed Martin Corporation.
Note: The current version is always the version on the Lockheed Martin network.

In general the analysis performed on lug and clevis fittings consists of a series of basic net section and bearing checks at various potentially critical points around the fitting. The same types of analyses performed on the lug are also performed on the clevis. Finally to complete the lug/clevis system, pin strength should be checked per Section 5.4.4 and if a bushing is used, it should be analyzed per Section 5.2.5. Figure 5.4.1-1 shows what is meant by the various terms when discussing this type of analysis.

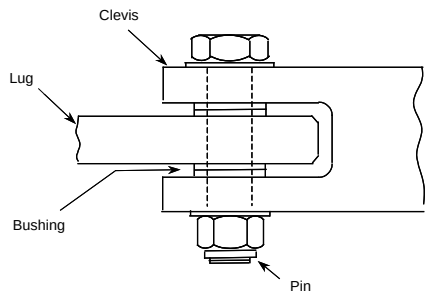

Figure 5.4.1-1 Lug Joint Terminology

Figure 5.4.1-2 shows the different types of lug/clevis geometries and failure modes. Note the assumptions of symmetry. If at all possible lug/clevis joints should be symmetric in both geometry and loading. The lug and clevis are only as strong as twice the weaker ligament. No benefit can be assumed if one side of the lug has excess edge distance or a taper angle, β, which results in more material on one side of the lug than the other.

The following table lists the range of applicability of this method.

Table 5.4.1-1 Range of Validity for Lug Analysis Method

Parameter	Range of Applicability
End distance / Hole Diameter	$0.75 \le c/D \le 5.5$
Width of Lug (at pin)/ Hole Diameter	$1.50 \le w/D \le 7.0$
Thickness: clevis / Hole Diameter	$0.18 \le t_{clevis}/D \le 1.0$ steel $0.25 \le t_{clevis}/D \le 1.0$ aluminum, titanium (Reference Section 5.2.3.2)
Thickness: lug / Hole Diameter	$0.30 \le t_{lug}/D \le 1.9$ recommended for new design

Note the difference between the t/D cutoff for the lug and the clevis. Reference 5-22 showed that rate of decrease in joint strength is greater for double shear joints than single shear joints, so lugs, which are generally in double shear, must maintain a higher ratio. Additionally, as the thickness decreases, when the thickness to diameter ratio drops below 0.18, testing indicates that the material no longer fails in bearing but in buckling at the edge of the hole. For lugs, because they are in double shear, this minimum thickness is approximately double so that the lug can support bearing loads for each clevis leg.

Copyright 2017 Lockheed Martin Corporation.
Note: The current version is always the version on the Lockheed Martin network.

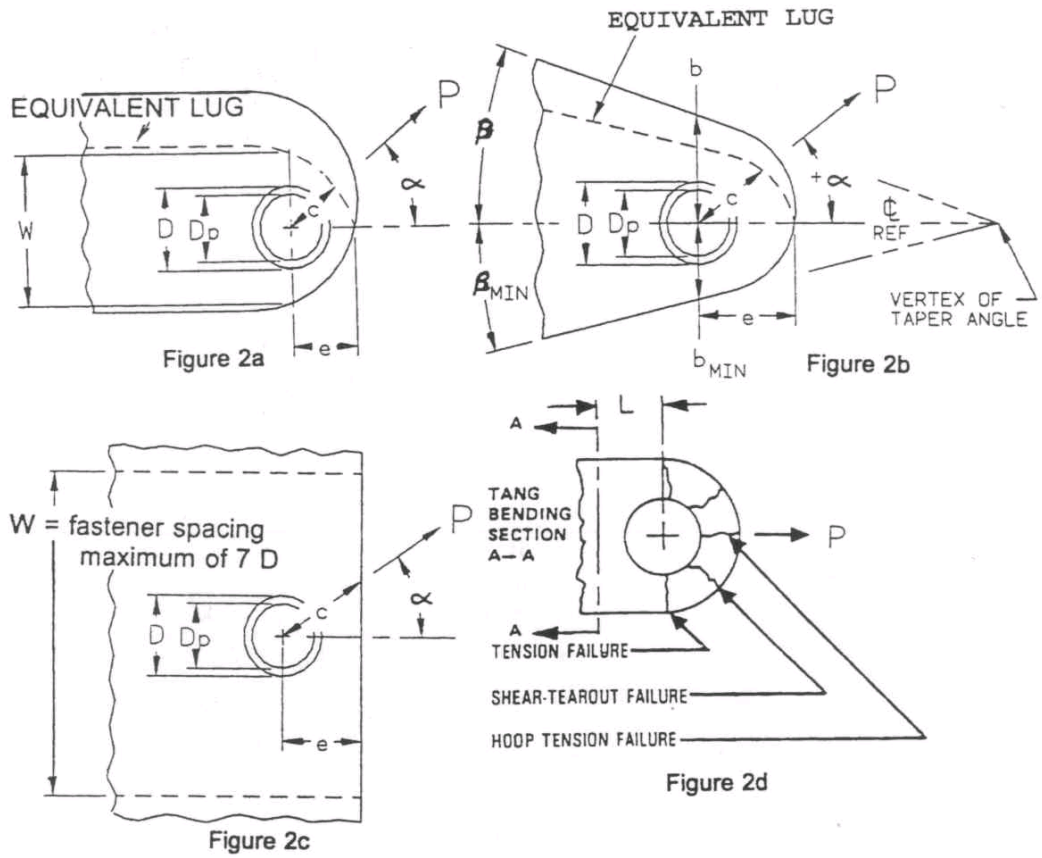

Figure 5.4.1-2 Different Types of Lug Geometries

5.4.2 Detailed Static Analysis of Lugs in Double Shear or Clevis Fittings

There are eight possible static checks performed on the lug or clevis: lug ultimate and yield bearing analysis, net section ultimate analysis at b_x, b_y, and c and net section yield analysis at b_x, b_y, and c,. Figure 5.4.2-1 illustrates b_x, b_y, and c. The dimensions b_x and b_y are always along the x and y axes, respectively; however the dimension c is always along the load line. If a lug or clevis is loaded along the x axis, c will be equal to (b_x+D/2); similarly if it is loaded along the y axis c will be equal to (b_y+D/2)

It is strongly recommended that the ratio of lug or clevis end distance along load line (c) to lug hole diameter (D) be equal to or greater than 1.0. There has been a history of corrosion and subsequent fatigue problems in Lockheed transport aircraft where this ratio has been allowed to go below 1.0. Investigations indicated the lug was very flexible and due to excessive deflection allowed moisture to be trapped between the bushing and the lug resulting in corrosion and premature failure. If it is necessary for c/D to be less than 1.0, component testing static and fatigue testing is advised.

Also shown in Figure 5.4.2-1 are the terms 'Lug x' and 'Lug y'. These are meant to define the material orientation in the lug or clevis directions. For instance, if the longitudinal material direction were parallel to the x axis of the lug then the Lug x direction would be longitudinal. Similarly if the longitudinal material direction were parallel to the x

Copyright 2017 Lockheed Martin Corporation.
Note: The current version is always the version on the Lockheed Martin network.

axis of the clevis, then the clevis x direction would be longitudinal. This is important when determining which material orientation to use for allowables selection.

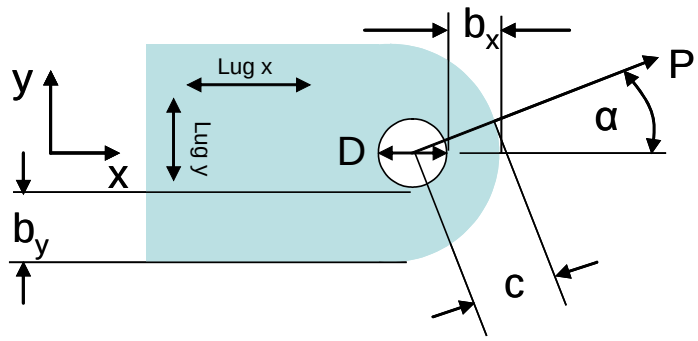

Figure 5.4.2-1 Lug or Clevis Geometry and Nomenclature

The strength of the lug or clevis is affected by its orientation relative to the grain direction of the part. If the part is machined from 2000 or 7000 series aluminum plate or aluminum forgings, careful consideration of grain orientation must be given. The use of thick plate, short transverse or edgewise grain direction orientation or the use of aluminum lithium alloys may require further reductions. Refer to Section 3.3 of this manual for further information.

Please note in the following sections, when the term "lug" is used it generically refers to the calculation for lug or clevis unless specifically noted.

5.4.2.1 Lug or Clevis – Bearing Strength

Lug or clevis ultimate bearing stresses are calculated in the conventional manner for bearing checks if the ratio of the lug thickness to hole diameter (t/D) is greater than 0.30 or the clevis thickness to hole diameter ratio is greater than 0.18 for steel or 0.25 for aluminum or titanium. The t/D ratio also has an upper bound which is the limit of bearing material testing and legacy lug testing. Table 5.4.1-1 provides a summary of these values.

Note that the bearing stress calculations use the total thickness of the lug. Bearing failure represents the failure of the material in the lug forward of the pin, in the direction of loading, and subsequent elongation of the hole. It is not a localized failure due to contact stress. The material lost due to a chamfer is not accounted for in the analysis if either of the following conditions is met:

- If a chamfer is required in the lug to clear the fillet on a shoulder bushing and its size is consistent with the Lockheed Design manual.
- If there is no bushing present but the total combined height of the chamfers is less than 25% of the lug thickness and the cross-section area removed by the chamfer is less than 2% of the area calculated by $(c-D/2)t_{lug}$ (Reference Figure 5.4.2-1).

If, for a specific design, these conditions cannot be met, then some accommodation for the chamfer must be made in the calculation of the bearing stress. For many situations, this can be done through the calculation of an effective thickness based on the equivalent remaining area; however geometries involving a large, shallow angle chamfer may require the use of an effective thickness based on the t_{lug}-$h_{chamfer}$. Engineering judgment should be used to determine the correct approach for a particular application.

A distribution factor is used to divide the total load between the two legs of the clevis. The legs should be of equal thickness, otherwise the eccentricity in the geometry will result in a moment developing which must then be accounted for. If the legs of the clevis are unequal the strength of the fitting should be assumed to be two times the strength of the weaker leg. A parameter, K_{dist} is used to distribute the load between the two legs of the clevis. The values recommended for K_{dist} are defined in Table 5.4.2-1. The value for the clevis uses an overlapping assumption to account for any unintentional eccentricities. Actual eccentricities will result in additional load peaking which can be developed from free body diagrams of the actual lug/clevis geometry. A K_{dist} value less than 0.5 shall not be used.

Copyright 2017 Lockheed Martin Corporation.
Note: The current version is always the version on the Lockheed Martin network.

Table 5.4.2-1 Recommended Values for K_{dist}

Structural Element	K_{dist}
Lug	1.0
Clevis with equal thickness legs and rigid pin	0.60, each leg

The bearing stress can be calculated as

$$f_{br\text{-}ult} = K_{dist}P/(Dt_{lug})$$ **Equation 5.4.2-1**

$$f_{br\text{-}limit} = K_{dist}P/(1.5Dt_{lug})$$ **Equation 5.4.2-2**

Where
P is the ultimate applied pin load (lbs)
t_{lug} is the thickness of the lug or a single leg of the clevis (in)
D is the diameter of the hole in the lug or clevis (in)
K_{dist} is the factor from Table 5.4.2-1 describing the distribution of load in the lug or between the two legs of the clevis
1.5 is the limit to ultimate safety factor[2]

The allowable bearing stress is calculated per Sections 3.3.3.6 and 3.3.3.7 of this manual. For e/D values between 1.5 and 2, a linear interpolation is used to obtain the allowable. For e/D values less than 1.5, the bearing allowable is assumed to be 0 at e/D=0.5 and a linear interpolation between e/D=1.5 and e/D=0.5 is performed. In addition, if the lug is oriented in the edgewise direction in thick aluminum plate, the bearing reduction factors per Table 3.3.3-2 apply. Caution must also be used in the orientation of lugs in aluminum forgings to ensure that the lug is not loaded across the parting plane of the material. Material properties in this region are lower due to the grain orientation and porosity. The margins of safety can then be calculated by

$$M.S.\ (ultimate{:}bearing) = (F_{bru\text{-}allow})/(K_{ftg}f_{br\text{-}ult}) - 1$$ **Equation 5.4.2-3**

$$M.S.\ (yield{:}bearing) = (F_{bry\text{-}allow})/(K_{ftg\text{-}limit}f_{br\text{-}limit}) - 1$$ **Equation 5.4.2-4**

Where
$F_{bru\text{-}allow}$ is the ultimate bearing allowable per PM4057, Sections 3.3.3.6 and 3.3.3.7. (psi)
K_{ftg}, $K_{ftg\text{-}limit}$ are the appropriate, program approved fitting factor. See Section 5.4.1.
f_{br} is the applied bearing stress at limit or ultimate (psi)
$F_{bry\text{-}allow}$ is the yield bearing allowable per PM4057, Sections 3.3.3.6 and 3.3.3.7. (psi)

5.4.2.2 Lug or Clevis – Net Section Tension Analysis at b_x

Net Section analysis at b_x is performed for both static ultimate and yield levels. As illustrated in Figure 5.4.2-1 this is a check across the ligament at the end of the lug. Figure 5.4.2-2 illustrates the failures modes being examined. The applied lug load is resolved into its x and y components. The x component would cause a shear tear out failure at the ligament while the y load would cause a tension failure. These two components are then used to calculate a combined margin of safety.

[2] This factor assumes an aircraft criterion of “no yield at limit load”. Some aircraft have other criteria such as “no yield at 115% limit load”. This factor should be adjusted appropriately.

Copyright 2017 Lockheed Martin Corporation.
Note: The current version is always the version on the Lockheed Martin network.

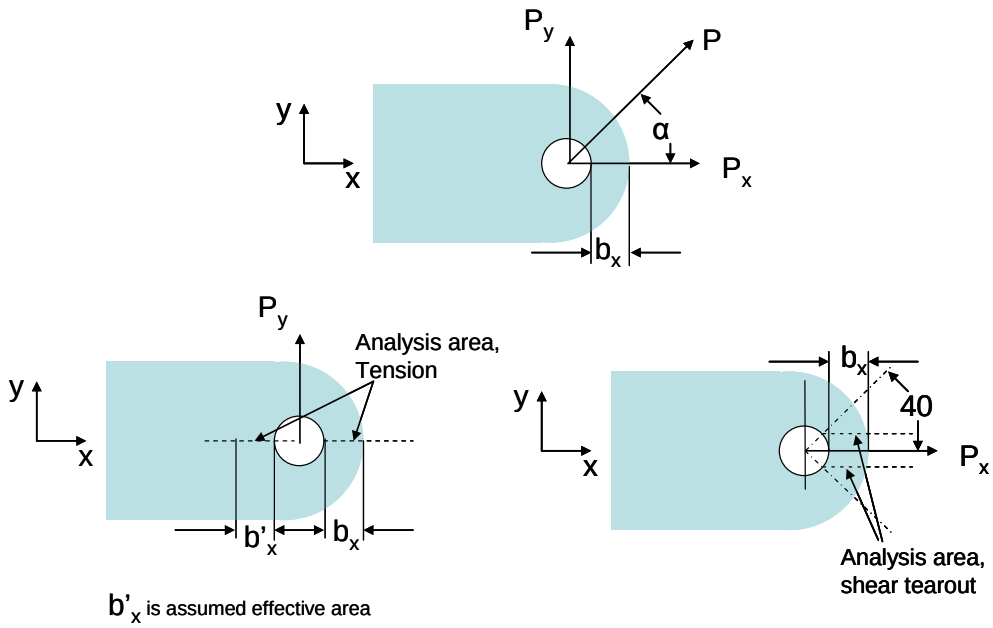

Figure 5.4.2-2 Area of Analysis for Net Section at b_x

The pin load P, should first be resolved into x and y components per

$$P_x = P\cos\alpha$$
$$P_y = P\sin\alpha$$

Equation 5.4.2-5

P is the ultimate applied pin load (lbs)
α is the angle between the x axis and the lug load (+ccw)

Calculating the tension stress in the b_x ligament area using P_y,

$$f_t = K_{dist}P_y/[2(1.1)b_x\, t_{lug}]$$

Equation 5.4.2-6

Where
P_y is the y component of the pin load (lbs) per Equation 5.4.2-5
b_x is the ligament width (in) from Figure 5.4.2-2, top

The 1.1 factor is an empirical factor derived for failure modes associated with the b_x ligament from comparison of the methodology with the test data contained in Reference 5-20. This factor is 1.0 for failure modes associated with b_y ligament and is assumed to vary linearly with the angle in between for calculation at the c ligament. It is applied to both tension and shear stresses.

Calculating the shear stress in the b_x ligament area using P_x,

$$f_s = \frac{K_{dist}P_x}{2 \cdot 1.1 \cdot t_{lug} \cdot \left(b_x + 0.234\frac{D}{2}\right)}$$

Equation 5.4.2-7

Where
P_x is the x component of the pin load (lbs) per Equation 5.4.2-5
D is the diameter of the bolt hole (in)
0.234 factor assumes the shear tear-out ligament is at 40 degrees from the horizontal per Figure 5.4.2-2 (Reference 5-20).

Copyright 2017 Lockheed Martin Corporation.
Note: The current version is always the version on the Lockheed Martin network.

Again, the 1.1 factor is derived empirically in Reference 5-20. The allowable stresses can be obtained from Reference 5-4 or other suitable sources. The analyst should remember to select the material direction appropriate to the lug loading and lug geometry as discussed in Section 5.4.1. To account for low elongation in the off-axis direction, an elongation reduction factor is empirically derived and presented in Reference 5-20. It is calculated as follows

$$R_e = 1.0 \text{ for } e_{lug} \geq 0.10$$

$$R_e = \sqrt{\left(0.38373 + 0.61728\frac{e_{lug}}{0.10}\right)} \qquad \textbf{Equation 5.4.2-8}$$

$$e_{lug} = \text{minimum}[(e_x + e_y)/2 \text{ or } (0.42e_x + 0.42e_y + 0.16e_z)] \qquad \textbf{Equation 5.4.2-9}$$

Where
e_{lug} is the lug or clevis elongation given by Equation 5.4.2-9. (in/in)
e_x is the elongation of the material in the lug x direction (in/in)
e_y is the elongation of the material in the lug y direction (in/in)
e_z is the elongation of the material in the lug z direction (in/in)

The margin of safety for ultimate static strength can be determined by developing stress ratios using the appropriate allowables and then combining per

$$R_t = K_{ftg}f_t/(R_eF_{tu\text{-}y}) \qquad \textbf{Equation 5.4.2-10}$$

$$R_s = K_{ftg}f_s/(R_eF_{su\text{-}x}) \qquad \textbf{Equation 5.4.2-11}$$

$$M.S.(net\ section) = \frac{1}{\sqrt[1.6]{R_t^{1.6} + R_s^{1.6}}} - 1 \qquad \textbf{Equation 5.4.2-12}$$

Where
$F_{tu\text{-}y}$ is the ultimate allowable tensile stress of the lug material in the lug y direction or the clevis material in the clevis y direction, from Reference 5-4 or other suitable reference (psi)
$F_{su\text{-}x}$ is the ultimate allowable shear stress of the lug material in the lug x direction or the clevis material in the clevis y direction, from Reference 5-4 or other suitable reference. (psi)
K_{ftg} is the appropriate, program approved fitting factor. See Section 5.4.1

The choice of the exponent of 1.6 for combined oblique loads was based on a review of test data and comes from Reference 5-21. The margin of safety for yield strength can be determined by developing stress ratios using the appropriate yield allowables and then combining per Equation 5.4.2-12

$$R_t = K_{ftg\text{-}limit}f_t/(1.5F_{ty\text{-}y}) \qquad \textbf{Equation 5.4.2-13}$$

$$R_s = K_{ftg\text{-}limit}f_s/(1.5F_{sy\text{-}xz}) \qquad \textbf{Equation 5.4.2-14}$$

Where
$F_{ty\text{-}y}$ is the yield tensile stress of the lug material in the lug y direction or the clevis material in the clevis y direction, from Reference 5-4or other suitable reference.(psi)
$F_{sy\text{-}xz}$ is the yield allowable shear stress of the lug material in the lug xz plane or the clevis material in the clevis xz plane from Equation 5.4.2-15. (psi)
1.5 is the Safety Factor or the ratio of ultimate to limit load.[3]

The yield shear allowable required for the calculation of yield margins of safety is given by the following for the lug or clevis xz and yz shear planes,

$$F_{sy\text{-}xz} = (F_{su\text{-}x} + F_{su\text{-}z})/(F_{tu\text{-}x} + F_{tu\text{-}z}) \bullet (F_{ty\text{-}x} + F_{cy\text{-}x} + F_{ty\text{-}z} + F_{cy\text{-}z})/4 \qquad \textbf{Equation 5.4.2-15}$$

$$F_{sy\text{-}yz} = (F_{su\text{-}y} + F_{su\text{-}z})/(F_{tu\text{-}y} + F_{tu\text{-}z}) \bullet (F_{ty\text{-}y} + F_{cy\text{-}y} + F_{ty\text{-}z} + F_{cy\text{-}z})/4 \qquad \textbf{Equation 5.4.2-16}$$

Where
$F_{su\text{-}x}$ is the ultimate shear stress of the material in the lug or clevis x direction from Reference 5-4 or other suitable reference. (psi)

[3] This factor assumes an aircraft criterion of "no yield at limit load". Some aircraft have other criteria such as "no yield at 115% limit load". This factor should be adjusted appropriately

Copyright 2017 Lockheed Martin Corporation.
Note: The current version is always the version on the Lockheed Martin network.

F_{su-y} is the ultimate shear stress of the material in the lug or clevis y direction from Reference 5-4 or other suitable reference. (psi)
F_{su-z} is the ultimate shear stress of the material in the lug or clevis z direction from Reference 5-4 or other suitable reference. (psi)
F_{ty-x} is the yield tensile stress of the material in the lug or clevis x direction from Reference 5-4 or other suitable reference. (psi)
F_{ty-y} is the yield tensile stress of the material in the lug or clevis y direction from Reference 5-4 or other suitable reference. (psi)
F_{ty-z} is the yield tensile stress of the material in the lug or clevis z direction from Reference 5-4 or other suitable reference. (psi)
F_{tu-x} is the ultimate tensile stress of the material in the lug or clevis x direction from Reference 5-4 or other suitable reference. (psi)
F_{tu-y} is the ultimate tensile stress of the material in the lug or clevis y direction from Reference 5-4 or other suitable reference. (psi)
F_{tu-z} is the ultimate tensile stress of the material in the lug or clevis z direction from Reference 5-4 or other suitable reference. (psi)

5.4.2.3 Lug or Clevis – Net Section Tension Analysis at b_y

Net Section analysis at b_y is performed for both static ultimate and yield levels. As illustrated in Figure 5.4.2-1 this is a check across the ligament at the side of the lug. Figure 5.4.2-3 illustrates the failures modes being examined. As in the analysis performed in Section 5.4.2.2, the applied lug load is resolved into its x and y components. For this analysis, however, the x component would cause a tension failure at the ligament while the y load would cause a shear tear out failure. These two components are then used to calculate a combined margin of safety.

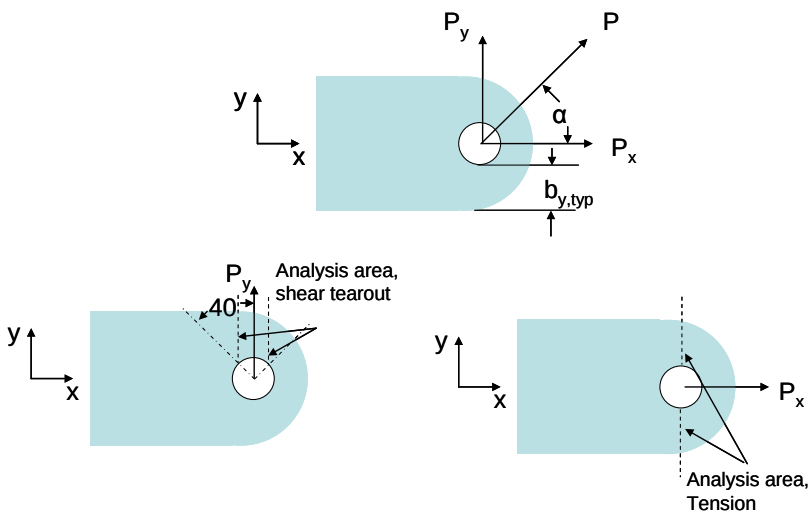

Figure 5.4.2-3 Area of Analysis for Net Section at b_y

The pin load P, should first be resolved into x and y components per **Equation 5.4.2-5**. Then, calculating the tension stress in the ligament, b_y, using P_x,

$$f_t = K_{dist} P_x / (2 b_y \, t_{lug}) \qquad \textbf{Equation 5.4.2-17}$$

Where
P_x is the x component of the pin load (lbs) per Equation 5.4.2-5
t_{lug} is the thickness of the lug or a single leg of the clevis (in)
K_{dist} is the factor from Table 5.4.2-1 describing the distribution of load in the lug or between the two legs of the clevis
b_y is the ligament width shown in Figure 5.4.2-3 (in)

Copyright 2017 Lockheed Martin Corporation.
Note: The current version is always the version on the Lockheed Martin network.

Calculating the shear stress in the ligament area using P_y,

$$f_s = \frac{K_{dist} P_y}{2 \cdot t_{lug} \cdot \left(b_y + 0.234 \frac{D}{2}\right)}$$ **Equation 5.4.2-18**

Where
P_y is the y component of the pin load (lbs) per Equation 5.4.2-5
D is the diameter of the bolt hole (in)
0.234 factor assumes the shear tear-out ligament is at 40 degrees from the vertical per Figure 5.4.2-3 (Reference 5-20).

The allowable stresses can be obtained from Reference 5-4 or other suitable sources. The analyst should remember to select the material direction appropriate to the lug loading and lug geometry as discussed in Section 5.4.1. The margin of safety for ultimate static strength can be determined by developing stress ratios using the appropriate allowables and then combining per Equation 5.4.2-12

$$R_t = K_{ftg} f_t / F_{tu\text{-}x}$$ **Equation 5.4.2-19**

$$R_s = K_{ftg} f_s / F_{su\text{-}y}$$ **Equation 5.4.2-20**

Where
f_t is the ligament tension stress as calculated by Equation 5.4.2-17(psi)
$F_{tu\text{-}x}$ is the ultimate allowable tensile stress of the material in the lug or clevis x direction, from Reference 5-4 or other suitable reference. (psi)
f_s the ligament shear tear out stress as calculated by Equation 5.4.2-18(psi)
$F_{su\text{-}y}$ is the ultimate allowable shear stress of the material in the lug or clevis y direction, from Reference 5-4 or other suitable reference. (psi)
K_{ftg} is the appropriate, program approved fitting factor. See Section 5.4.1.

The margin of safety for yield strength can be determined by developing stress ratios using the appropriate yield allowables and then combining per Equation 5.4.2-12.

$$R_t = K_{ftg\text{-}limit} f_t / (1.5 F_{ty\text{-}x})$$ **Equation 5.4.2-21**

$$R_s = K_{ftg\text{-}limit} f_s / (1.5 F_{sy\text{-}yz})$$ **Equation 5.4.2-22**

Where
f_t is the ligament tension stress as calculated by Equation 5.4.2-17(psi)
$F_{ty\text{-}x}$ is the yield tensile stress of the material in the lug or clevis x direction from Reference 5-4 or other suitable reference. (psi)
f_s the ligament shear tear out stress as calculated by Equation 5.4.2-18 (psi)
$F_{sy\text{-}yz}$ is the yield allowable shear stress of the material in the lug or clevis yz plane from Equation 5.4.2-16 (psi)
$K_{ftg\text{-}limit}$ is the appropriate, program approved limit fitting factor. See Section 5.4.1
1.5 is the Safety Factor or the ratio of ultimate to limit load.

5.4.2.4 Lug – Net Section Analysis at c

Net Section analysis at c is performed for both static ultimate and yield levels. As illustrated in Figure 5.4.2-1 this is a check across the ligament along the applied loading of the lug or clevis. It can be identical with the check performed at b_x or b_y if the lug is loaded along the x or y axis, respectively. Figure 5.4.2-4 illustrates the failures modes being examined. In this case, the applied pin load is not resolved into its components. The load is used directly along its line of action to check shear out of the ligament at c.

Copyright 2017 Lockheed Martin Corporation.
Note: The current version is always the version on the Lockheed Martin network.

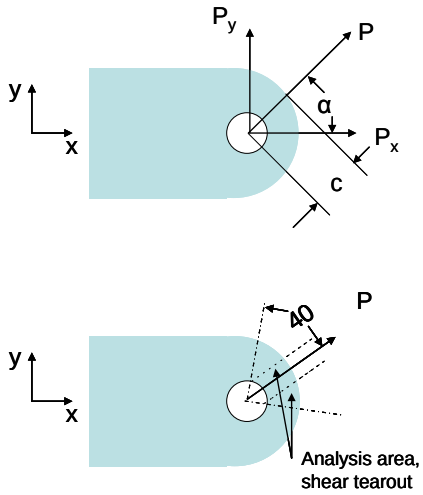

Figure 5.4.2-4 Area of Analysis for Net Section at c.

Calculating the stress in the ligament, at c, using P,

$$f_s = \frac{K_{dist}P}{2t_{lug}\left(c - \frac{D}{2} + 0.234\frac{D}{2}\right)\left(1.1 - 0.1 \cdot \frac{\alpha}{90}\right)}$$ **Equation 5.4.2-23**

Where
P is the ultimate applied pin load (lbs)
t_{lug} is the thickness of the lug or a single leg of the clevis (in)
K_{dist} is the factor from Table 5.4.2-1 describing the distribution of load in the lug or between the two legs of the clevis
c is the distance from the center of the hole to the edge of the plate along the load line(in)
D is the diameter of the bolt hole (in)
α is the angle the load makes with the x axis : +CCW (degrees)
0.234 factor assumes the shear tear-out ligament is at 40 degrees from the load line per **Figure 5.4.2-3**.

The 1.1 factor is an empirical factor derived for failure modes associated with the b_x ligament from comparison of the methodology with the test data contained in Reference 5-20. This factor is 1.0 for failure modes associated with b_y ligament and is assumed to vary linearly with the angle in between for calculation at the c ligament. It is applied to both tension and shear stresses. Reference 5-20 presents this relationship as (α/90(1.0-1.1) + 1.1) which has a value of 1.1 at α=0 and a value of 1.0 at α=90.

The allowable shear stress is calculated as shown below for off axis applications.

$$F_{su\text{-}allow} = R_e\,[F_{su\text{-}x} + (F_{su\text{-}y} - F_{su\text{-}x})(\alpha/90)]$$ **Equation 5.4.2-24**

Where
$F_{su\text{-}x}$ is the ultimate shear stress of the material in the lug or clevis x direction from Reference 5-4 or other suitable reference (psi)
$F_{su\text{-}y}$ is the ultimate shear stress of the material in the lug or clevis y direction from Reference 5-4 or other suitable reference (psi)
α is the angle the load makes with the x axis : +CCW (degrees)
R_e is a reduction factor to account for low elongation and is calculated per Equation 5.4.2-8.

Copyright 2017 Lockheed Martin Corporation.
Note: The current version is always the version on the Lockheed Martin network.

The margin of safety for ultimate static strength can be determined by using the allowable developed in Equation 5.4.2-24 and the stress from Equation 5.4.2-23.

$$M.S.(ultimate{:}net\ section) = F_{su\text{-}allow}/(K_{ftg}f_s)-1 \qquad \textbf{Equation 5.4.2-25}$$

Where
f_s the ligament shear tear out stress as calculated by Equation 5.4.2-23 (psi)
$F_{su\text{-}allow}$ is the ultimate allowable shear stress of the material along the axis of loading from Equation 5.4.2-24(psi)
K_{ftg} is the appropriate, program approved fitting factor. See Section 5.4.1

For the development of the off axis yield allowable, the yield allowables calculated in Equation 5.4.2-15 and Equation 5.4.2-16 are used

$$F_{sy\text{-}allow} = F_{sy\text{-}xz}+(F_{sy\text{-}yz} - F_{sy\text{-}xz})(\alpha/90) \qquad \textbf{Equation 5.4.2-26}$$

Where
$F_{sy\text{-}xz}$ is the yield shear stress of the material in the lug xz plane from Equation 5.4.2-15. (psi)
$F_{sy\text{-}yz}$ is the yield shear stress of the material in the lug yz plane from Equation 5.4.2-16. (psi)
α is the angle the load makes with the x axis : +CCW (degrees)

The margin of safety for yield strength can be determined by using the appropriate yield allowable from Equation 5.4.2-26 and the stress from Equation 5.4.2-23

$$M.S.\ (yield{:}net\ section) = 1.5F_{sy\text{-}allow}/(K_{ftg\text{-}limit}f_s) - 1 \qquad \textbf{Equation 5.4.2-27}$$

where
f_s is the ligament shear-tear-out stress from Equation 5.4.2-23 (psi)
$F_{sy\text{-}allow}$ is the yield allowable shear stress of the material along the load axis as calculated from Equation 5.4.2-26 (psi)
K_{ftg} is the appropriate, program approved fitting factor. See Section 5.4.1
1.5 is the safety factor or ratio of limit to ultimate

5.4.2.5 Lug or Clevis – Tang Bending

Out-of-plane bending of a single shear lug or clevis tang must be checked due to the tolerances involved in manufacturing and the potential for misalignment forces and or clamp up forces if an un-shimmed (unplanned) gap exists between the parts. Clamp-up, *i.e.*, deforming the clevis due to tightening a bolt/nut, should be avoided if possible, through the use of a shoulder bolt and cotter pin rather than a torqued bolt/nut combination. In any event, the tang should be checked for the bending stress at the critical section either resulting from a side load of 10% of the lug load acting at the center of the pin hole or in lieu of the standard 10% side load, an estimate of the worst case loading due to misalignment, friction effects, and/or rigging due to drawing/ manufacturing tolerances may be used. Additionally, any side load due to gap closure /contact resulting from thermally induced deformations needs to be accounted for. The load due to these combined effects is generally less than the 10% load but may be more if there are large tolerances on the assembly or clevis fitting or large temperature effects. Components that need to be accounted for are

- bending stress due to clamp up of the clevis on the lug which is generally calculated from any remaining un-shimmed gap
- bending stress due to an externally applied side load (note an applied side load is not recommended in lug applications)
- bending stress due to actuator misalignment and/or extreme rigging tolerances

Clamp-up will bend the tangs inward toward lug centerline. Misalignment side load will bend the tang away from centerline. These should be analyzed as separate conditions and not used to relieve one another. An externally applied side load may be in either direction and should be added where appropriate. Again, it should not be used to relieve either the clamp-up load or the side load.

Copyright 2017 Lockheed Martin Corporation.
Note: The current version is always the version on the Lockheed Martin network.

These analyses are performed at ultimate conditions only, unless program guidance requires otherwise. An exception to this is if the incidental side load is caused by angular misalignment or gap closure due to deformation. In that case the calculations for the side load shall be performed at limit and then multiplied by the appropriate factor to obtain the ultimate load. Note that some programs require that for critical structure where adverse deflection or manufacturing tolerance could result in catastrophic failure of the air vehicle, the analysis is performed for a total of 1.5 times structural deflections plus 1.25 to1.5 times thermal deflections plus 1.1 times worst manufacturing tolerance.

The fitting factors discussed in Section 5.4.1 should be included if they have been applied to the remainder of the lug and clevis analysis.

Typical tang bending geometry is shown in Figure 5.4.2-5. The load is typically applied at the center of the pin hole and in general, the critical section is where the tang joins the fitting; however, design specific geometric considerations may result in other locations which are more critical. The side load is only included into the structure back to where the lug fitting attaches to the main structure including the fitting attachment joint. In the case of integral fittings, this load shall be applied back to where the section becomes typical of the surrounding structure.

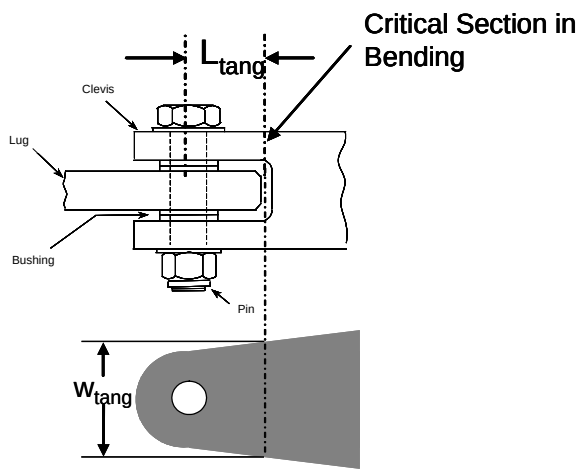

Figure 5.4.2-5 Tang Bending Geometry

Some other considerations that should be accounted for in tang bending:

- If the clevis is symmetric and the lug is in double shear, side-load on the lug need not be considered; however side load on the clevis tang should be analyzed.
- If spherical bearings are used, they are capable of inducing angular misalignment side load on the clevis; however, they cannot induce angular side load on the lug. Note if the clevis is not symmetric, other side loads may be induced on the lug. Refer to Figure 5.4.2-6
- Detrimental deformation requirements on many lug/clevis arrangements, *i.e.*, no binding or interference at 115% of design limit load, will prevent contact between many parts at limit load and will thereby prevent the occurrence of incidental side loads due to part contact.
- Many designs subject to significant thermal loading will have part clearances that allow for part expansion and contraction such that interfacing part contact, such as lug-to-clevis contact, is not possible under maximum thermal loading conditions.
- If clevis clamp-up is not eliminated through the use of shoulder bolt and cotter pin, the stress from clamp-up should be included in durability and damage tolerance analysis as a residual stress.

Copyright 2017 Lockheed Martin Corporation.
Note: The current version is always the version on the Lockheed Martin network.

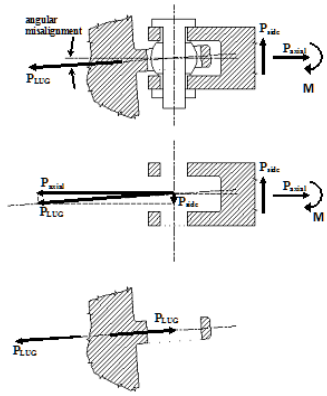

Figure 5.4.2-6 Lug/Clevis Assembly Misalignment Free-body with Spherical Bushing

In addition to the loads due to the items discussed above, if the load applied has an in-plane, y component a bending stress, $m_{b\text{-}y}$ about the strong axis of the tang also develops and must be included. If the misalignment load is estimated as 10% of the applied load, the ultimate bending stress and equivalent moment, $m_{b\text{-}x}$, are given by

$$f_{b\text{-}1} = f_{b\text{-}clampup} + f_{b\text{-}sideload}$$

$$f_{b\text{-}2} = f_{b\text{-}misalignment} + f_{b\text{-}sideload}$$

$$f_b = max(f_{b\text{-}1}, f_{b\text{-}2})$$

$$f_{b\text{-}clamp\text{-}up} = [0.5g_{max}(3.0t_{tang}E) / (2L_{tang}^2)]_{clampup}$$

$$f_{b\text{-}sideload} = [6P_{side}L_{tang}/(w_{tang}t_{tang}^2)]_{sideload}$$

$$f_{b\text{-}misalignment} = [(6(0.10)PL_{tang})/(w_{tang}t_{tang}^2)]_{misalignment}$$

$$m_{b\text{-}x} = f_b w_{tang} t_{tang}^2/6 \qquad \textbf{Equation 5.4.2-28}$$

$$m_{b\text{-}y} = K_{dist}P_yL_{tang} \qquad \textbf{Equation 5.4.2-29}$$

where
0.50 assumes the gap is divided equally on both sides of lug[4]
g_{max} is the un-shimmed gap between the clevis and the lug (in)
t_{tang} is the thickness of the tang at the critical section (in)
E is the Modulus of Elasticity (psi)
L_{tang} is the length of the tang from the pin to the critical section (in)
P is the ultimate applied pin load (lbs)
P_{side} is the out of plane, externally applied side load, if applicable(lb)
w_{tang} is the width of the critical section of the tang (in)
P_y is the y-component of the ultimate applied pin load (lb)
K_{dist} is the factor describing the distribution of loading between the two clevis legs. See Table 5.4.2-1

Note that if there is an externally applied side load in the above equation it should only be included in the calculation of clamp-up stress, $f_{b\text{-}1}$, or side-load stress, $f_{b\text{-}2}$, if additive (i.e. ***do not use if relieving****) and it should only be included once.*

The axial stress in the tang must also be calculated at the critical bending location for a combined bending check per PM4057, Section 6.3.6. Using the resolved components of load given by Equation 5.4.2-5, the axial stress can be calculated by

$$f_{axial} = K_{dist}P_x/(w_{tang}t_{tang}) \qquad \textbf{Equation 5.4.2-30}$$

where

[4] If the geometry or tolerance build-up can result in the total gap on one side of the lug, adjust the equation appropriately to remove this factor.

Copyright 2017 Lockheed Martin Corporation.
Note: The current version is always the version on the Lockheed Martin network.

K_{dist} is the factor describing the distribution of loading between the two clevis legs. See Table 5.4.2-1
t_{tang} is the thickness of the tang at the critical section. (in)
P_x is the x component of the lug load (lbs) per Equation 5.4.2-5
w_{tang} is the width of the critical section of the tang (in)

The allowable bending moment, based on plastic bending analysis, can be determined from Section 6.3.2 using k=1.5 (rectangular section). Once M_{allow} is determined, the stress ratios, can be calculated from

$$R_t = K_{ftg} f_{axial}/F_{tu} \qquad \textbf{Equation 5.4.2-31}$$
$$R_{b\text{-}x} = K_{ftg} m_{b\text{-}x}/M_{allow\text{-}x}$$
$$R_{b\text{-}y} = K_{ftg} m_{b\text{-}y}/M_{allow\text{-}y}$$

where
f_{axial} is the axial stress in the tang given by Equation 5.4.2-29. (psi)
F_{tu} is the ultimate tensile stress of the material, taken as the minimum of the lug x or lug y material direction from Reference 5-4 or other suitable reference (psi)
K_{ftg} is the appropriate, program approved fitting factor. See Section 5.4.1
$m_{b\text{-}x}$ is the equivalent bending moment about the x-axis from Equation 5.4.2-28. (in-lb)
$m_{b\text{-}y}$ is the equivalent bending moment about the y-axis from Equation 5.4.2-29. (in-lb)
$M_{allow\text{-}x}$, $M_{allow\text{-}y}$ are the allowable bending moments about the x and y axes, respectively, from Section 6.3.2, for k=1.5 (both directions). (in-lb)

The margins of safety for ultimate load can then be obtained per PM4057 “Combined Stresses in Plastic Bending”, Section 6.3.6.1.

5.4.3 Single Shear Lugs

The bending in a single shear lug can make the lug and pin more critical than in double shear lugs. Double shear lugs are preferred for this reason and the use of single shear lugs is discouraged. The bending moment distribution assumes there is no clamp up and the bending moment in the pin is resisted by socket action in the lug as shown in Figure 5.4.3-1.

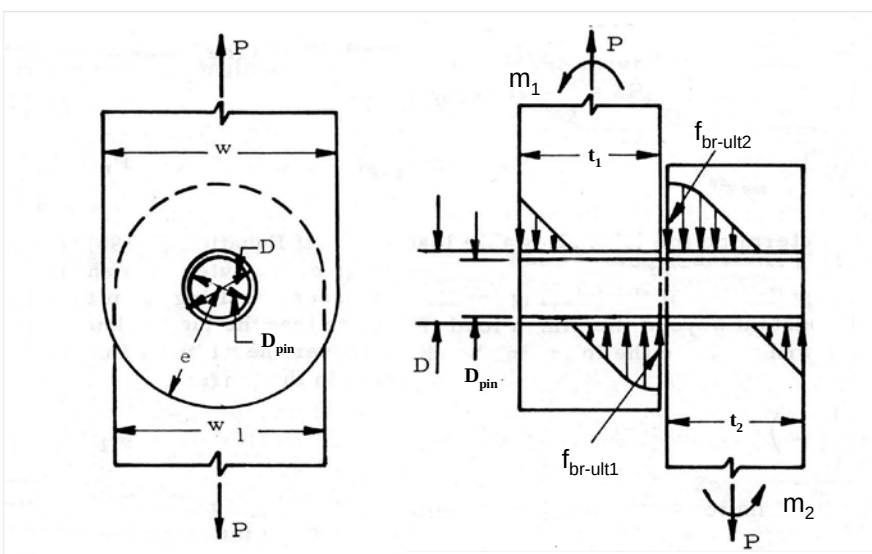

Figure 5.4.3-1 Single Shear Lug Moment Development

Copyright 2017 Lockheed Martin Corporation.
Note: The current version is always the version on the Lockheed Martin network.

The bending moments of the system are given by

$$m_1+m_2 = P(t_1/2 + g + t_2/2)$$ **Equation 5.4.3-1**

where
P is the ultimate applied lug load (in-lbs)
t_1, t_2 are the thicknesses of lugs 1 and 2, respectively (in)
m_1,m_2 are the resulting bending moments in lugs 1 and 2, respectively (in-lbs)
g is the gap between the two lugs (in) discussed below.

The moments are distributed between the two lugs based on their relative stiffness. If they are unsupported laterally to the load, then this distribution may be based on an EI relationship. If they are supported, then a more sophisticated approach may be necessary for the distribution of the moment.
The gap used in the above calculation would include any shim or gap between the two surfaces of the lug, which should be minimized to the greatest extent possible, plus any gap created by flanges on bushings. This is shown in Figure 5.4.3-2. Note this analysis handles chamfers on bushings differently than when calculating the bending moment on the pin.

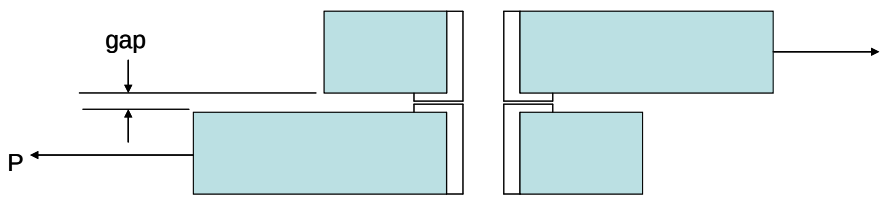

Shoulder Bushing with gap

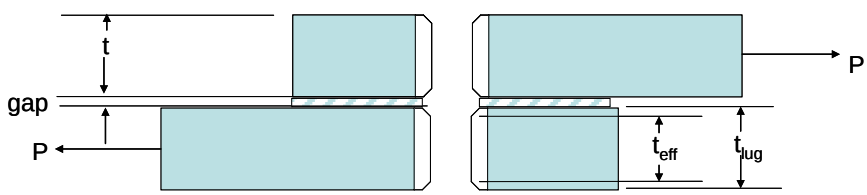

Chamfered Bushing – use t_{lug} for moment calculation, not t_{eff}. Add in gap between lugs, shimmed or un-shimmed.

Figure 5.4.3-2 Single Shear Lug Gap Examples

Once the moment has been obtained, the peaked bearing stress on the lug or clevis can be calculated from

$$f_{br\text{-}ult} = P/(Dt_{lug}) + 6m/(1.5Dt_{lug}^2)$$ **Equation 5.4.3-2**

where
P is the ultimate applied pin load (lbs)
D is the diameter of the hole in the lug (in)
t_{lug} is the lug thickness, t_1 or t_2 (in)
m is the moment m_1 or m_2 from Equation 5.4.3-1 (in-lbs)
1.5 is the section factor for a rectangular cross-section in plastic bending

In general, the lug thickness will be used for the bearing stress calculations. Refer to discussions under double shear lug and clevis bearing analysis for the rationale to this approach.

The margin of safety for bearing can then be calculated using Equation 5.4.2-3.

A single shear lug will result in bending not only at the base of the lug but also across the critical net section as shown in Figure 5.4.3-3. As a result, the net section stress must include contributions from the bending moment as

Copyright 2017 Lockheed Martin Corporation.
Note: The current version is always the version on the Lockheed Martin network.

well as the axial load. The net section tension stress can be calculated using Equation 5.4.2-18. The applied moment is m_1 or m_2 from Equation 5.4.3-1 and the allowable bending moment for the lug should be calculated using the modulus of rupture and the moment of inertia for the net section. If there is a y component to the lug, the shear stress would be calculated using Equation 5.4.2-19. Details on developing the modulus of rupture and the stress interactions can be found in Section 6.3. The appropriate program-approved fitting factor should be included in the margin calculations.

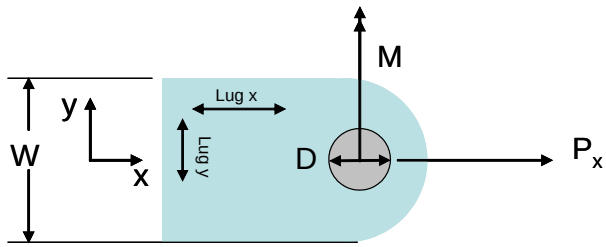

Figure 5.4.3-3 Single Shear Lug Geometry and Loading

If a torqued fastener is used, the fastener margins should follow the method of Section 5.2.3 except the bending moment used should be as calculated by Equation 5.4.3-1. If a pin or an un-torqued fastener is used in the single shear lug, the beam-in-a-socket method of Section 5.3.4 should be used to determine maximum pin shear and bending moment.

5.4.4 Analysis of Configurations with Multiple Lugs

Configurations involving multiple lug layers should be analyzed per the discussion below adapted from References 5-2 and 5-3. This type of lug fitting is classified by the total number of lug layers. As an example, Figure 5.4.4-1 shows a 7 lug multiple layer joint.

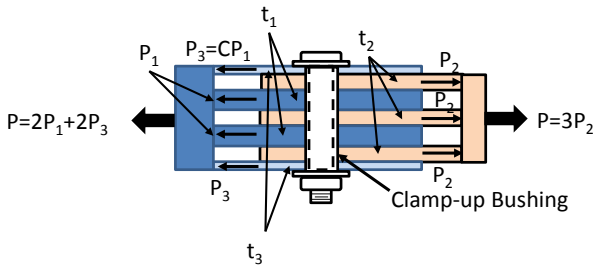

Figure 5.4.4-1 Seven Lug Multiple Layer Fitting

The load carried by each lug layer as well as the pin shear and bending moment is determined by the distribution shown in Table 5.4.4-1. This distribution is based on an assumption of plastic behavior at ultimate load for each of the layers and elastic bending of the pin. This distribution results in approximately zero bending deflection of the pin. It is also based on all of the layer thickness being consistent with Figure 5.4.4-1, *i.e.*, all legs shown on the right side in Figure 5.4.4-1of equal thickness, t_2, and the internal legs on the left side of equal thickness, t_1, and the two external legs of the left side equal to t_3.

From Table 5.4.4-1, it can be noted that as the number of lug layers increases, the distribution becomes more uniform.

Copyright 2017 Lockheed Martin Corporation.
Note: The current version is always the version on the Lockheed Martin network.

Table 5.4.4-1 Distribution of Loads for Multi-layer Lug Fitting

Total No. Lugs (N)	P_1	P_2	C	$P_3=CP_1$	Pin Shear P_{pin}	Pin Bending Moment, m_{pin}	t_1/t_2	t_3/t_2
5	0.588P	0.500P	0.35	0.206P	0.294P	$0.041P(t_1+t_2)$	1.176	0.412
7	0.357P	0.333P	0.40	0.143P	0.189P	$0.029P(t_1+t_2)$	1.072	0.429
9	0.259P	0.250P	0.43	0.137P	0.140P	$0.024P(t_1+t_2)$	1.036	0.445
11	0.204P	0.200P	0.44	0.090P	0.110P	$0.020P(t_1+t_2)$	1.02	0.449
∞	$\frac{2}{N-3+4C}P$	$\frac{2}{N-1}P$	0.50	CP_1	$0.50P_1$	$0.125 \cdot P_1(t_1+t_2)$	1.00	0.50

Depending on the application, multi-layer lug fittings can be prone to additional induced side load not adequately represented by an air vehicle level finite element model.

Also note angular misalignment for properly design multiple lug configuration will not induce a net side load. These loads are reacted as uneven finger loading within the multiple lug parts. Large deformation induced side loads should be accounted for as a part of the applied side load for multiple lug configurations. If this is done, they should not be duplicated in the incidental side load calculation.

Once the lug layer loads and pin loads are determined, the analysis can be performed in the same fashion as the lug or clevis analysis of Section 5.4.2.1 through 5.4.2.4.

5.4.5 Lug and Clevis Pin Analysis

Figure 5.4.3-5 provides a definition of how to define the gap in the presence of bushings when considering the analysis of the pin.

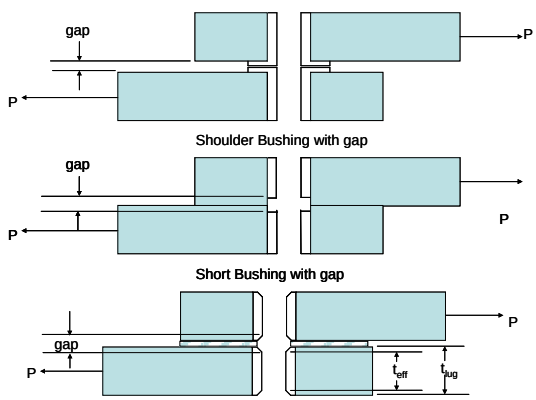

Figure 5.4.5-1 Gap Considerations for Pin Analysis

This definition of gaps can be used to analyze pins for bending.

Although actual pin bending failures are infrequent, excessive pin deflection can lead to bearing load peaking in the clevis and additional clevis tang bending, leading to premature failure of the joint due to failure of the clevis or bushing. Initial design of the lug pin should seek to keep the pin stiff relative to the lug so that the load can distribute in an approximately uniform manner across the lug and clevis bearing faces. The stress in the pin for a stiff pin design will be increased over that of a flexible pin design but the benefit is to eliminate the bearing stress peaking in

Copyright 2017 Lockheed Martin Corporation.
Note: The current version is always the version on the Lockheed Martin network.

the lug and clevis and minimize additional clevis bending due to a flexible pin design, which improve the overall durability life due to a lower number of bending cycles.

The approach used to determine whether this goal is met is to determine the allowable load of the pin based on its bending stiffness. The geometry of the lug joint is shown in Figure 5.4.5-2.

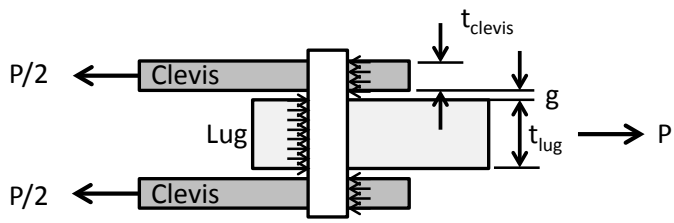

Figure 5.4.5-2 Lug Fitting Geometry for Pin Bending Analysis

The moment arm used in the pin bending strength determination is given as

$$L_{arm}=t_{clevis}/2+g+t_{lug}/4 \qquad \textbf{Equation 5.4.5-1}$$

where
t_{clevis} is the entire thickness of the clevis (in)
t_{lug} is the entire thickness of the lug (in)
g is the width of the gap (in)

The load that can be supported by the pin in bending for the geometry of the lug/clevis fitting is calculated as

$$P_{pinbending}=M_{allow}/L_{arm} \qquad \textbf{Equation 5.4.5-2}$$

where
M_{allow} is the allowable bending moment based on the modulus of rupture per Section 6.3 for solid or hollow pins (in-lb) or from IDAT/PLASBEND
L_{arm} is given by Equation 5.4.3-1 (in)

Table 5.4.5-1, derived from the equations of Section 5.4.2, provides a list of allowable lug/clevis load calculations necessary to determine a single value representing the strength of the lug for comparison to the pin bending strength. Symbols are as described in the reference equations. For each of the lug fitting components, *i.e.* the lug, clevis or bushing, the bearing, shear tear-out along the load line and the net section across the width of the lug or clevis are determined. Then the minimum value is selected for each allowable category. Finally the lug strength is the minimum of the three minimums. Note that the yield value is multiplied by 1.5, irrespective of whether a 1.15xDLL yield criteria is imposed by the program since the representative strength of the lug/clevis fitting for comparison to the pin bending strength is the desired outcome.

A margin for the lug/clevis fitting will not be written based on these calculations.

Copyright 2017 Lockheed Martin Corporation.
Note: The current version is always the version on the Lockheed Martin network.

Table 5.4.5-1 Equations for Determination of Lug/Clevis Strength, $P_{LugStrength}$

Allowable	Reference Equations	Equations Choose minimum of 1.5•yield or ultimate	
$P_{brg\text{-}allow}$ = Minimum of Lug, Clevis or Bushing	5.4.2-1 thru 5.4.2-4	Lug	$P_{brg\text{-}allow}=Minimum(F_{bru\text{-}allow}Dt_{lug},\ 1.5F_{bry\text{-}allow}Dt_{lug})$
		Clevis	$P_{brg\text{-}allow}=Minimum(F_{bru\text{-}allow}Dt_{clevis},\ 2\bullet1.5F_{bry\text{-}allow}Dt_{clevis})$
	Equation 5.2.5-10 or 5.2.5-11	Bushing	$P_{brg\text{-}allow}=1.5P_{br\text{-}yield\text{-}allow}$
$P_{tearout}$ = Minimum of Lug or Clevis	Equation 5.4.2-16, 5.4.2-23, 5.4.2-24	Lug	$P_{tearout} = F_{su-allow} \cdot 2t_{lug}\left(c - \frac{D}{2} + 0.234\frac{D}{2}\right) \cdot \left(1.1 - 0.1 \cdot \frac{\alpha}{90}\right)$
			$P_{tearout} = 1.5F_{sy-allow} \cdot 2t_{lug}\left(c - \frac{D}{2} + 0.234\frac{D}{2}\right) \cdot \left(1.1 - 0.1 \cdot \frac{\alpha}{90}\right)$
		Clevis	$P_{tearout} = 2F_{su-allow} \cdot 2t_{clevis}\left(c - \frac{D}{2} + 0.234\frac{D}{2}\right) \cdot \left(1.1 - 0.1 \cdot \frac{\alpha}{90}\right)$
			$P_{tearout} = 2 \cdot 1.5F_{sy-allow} \cdot 2t_{clevis}\left(c - \frac{D}{2} + 0.234\frac{D}{2}\right) \cdot \left(1.1 - 0.1 \cdot \frac{\alpha}{90}\right)$
$P_{net\text{-}tension}$ = Minimum of Lug or Clevis	Equation 5.4.2-17, 5.4..2-19	Lug	$P_{net\text{-}tension}=Minimum[F_{tux}\bullet(2b_yt_{lug}),\ 1.5\ F_{tyx}\bullet(2b_yt_{lug})]$
		Clevis	$P_{net\text{-}tension}=Minimum[2\bullet F_{tux}\bullet(2b_yt_{clevis}),\ 2\bullet1.5F_{tyx}\bullet(2b_yt_{clevis})]$
$P_{LugStrength}$		Lug, Clevis or Bushing	Minimum ($P_{brg\text{-}allow}$, $P_{shear\text{-}tearout}$, $P_{net\text{-}tension}$)

If the value obtained for $P_{pinbending}$ from Equation 5.4.5-2 exceeds the double shear pin shear strength, $P_{shear\text{-}allow}$ and $P_{LugStrength}$ from Table 5.4.5-1, the pin is stiff relative to the joint and no further analysis of pin bending is required. This is illustrated in Figure 5.4.5-3. Also illustrated are the effect of t/D and e/D on the lug/clevis strength and the effect of steel versus titanium pins on pin strength. This figure is only an example to show the relationship between the different parameters and should not be construed as an analysis curve.

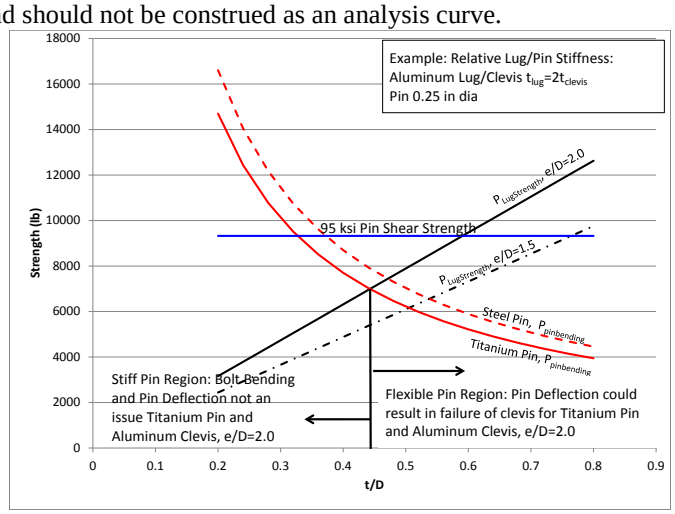

Figure 5.4.5-3 Relationship Between Pin Shear and Bending Stiffness and Lug/Clevis Stiffness

The diameter of the pin and the thickness of the lug and clevis are the parameters that most influence the relative strengths. The lug and clevis should be only as thick as necessary to maintain appropriate margins and minimum t/D requirements, should be symmetrical in thickness to prevent any secondary loads. If the lug and clevis get too thick, such that the pin falls into the flexible region, either the pin diameter is increased or a stronger pin material is selected or both.

Copyright 2017 Lockheed Martin Corporation.
Note: The current version is always the version on the Lockheed Martin network.

As discussed in the introduction to this section, the initial design of the lug/clevis and pin should result in a pin which is in the stiff pin region, preferably above the pin shear strength line. This results in the best design for strength and life.

If the design falls into the flexible pin region, a flexible pin analysis must be performed. This will somewhat relieve the load on the pin; however, it will peak the bearing load on the lug outer face and the clevis inner face and it will tend to induce additional bending moment in the clevis tang. This is typically done using Section 5.3.4 which examines the pin as a Beam-in-a-Socket.

5.4.6 Lug / Clevis Analysis Example Problems

In this section some examples of lug and clevis fittings will be given to illustrate the methodology described in Section 5.4. Note that the material is a generic aluminum (plate or extrusion, as specified) and properties have been changed for illustration purposes so it does not reflect a specific aluminum alloy.

Section	Example Type	Discussion
5.4.6.1	Typical Lug, Aluminum Extrusion, e/D=1.5, Off Axis Loading	This is a typical lug analysis and serves as a baseline for comparison of some of the knockdown effects.
5.4.6.2	Lug with e/D=1	Same as Section 5.4.6.1 with e/D reduced to 1.0
5.4.6.3	Lug with Lug x = ST material. Material is now aluminum plate material	Same as Section 5.4.6.1 lug but Lug x direction is material ST direction – this significantly reduces many of the material properties.
5.4.6.4	Lug with Lug x – Material L and Lug y – Material ST. Material is aluminum plate material.	Same as Section 5.4.6.1 lug but is now considered edgewise oriented, requiring bearing edgewise orientation reduction factor.

A summary of minimum margins from Examples 1-4 are shown below for discussion and comparison. The load level used for the examples was set by driving the critical margin for the baseline lug to 0. The geometry and material orientation for this lug was dictated by best practices and following all of the guidelines.

- The second lug, with e/D at 1.0 has similar margins, but note that it has an applied load half of the baseline lug. That is because the bearing allowable for e/D of 1.0 is half of the value for an e/D of 1.5.
- For the Lug with the same geometry as the baseline, but oriented in the ST direction, a significantly reduced margin for net section ultimate calculations results. Orienting lugs in the short transverse direction should be avoided if at all possible because of the reduced properties in the short transverse direction due to the application of load across the material grain boundaries. This can also result in poor durability and damage tolerance characteristics.
- Finally for the lug oriented in the edgewise direction, there is a significant reduction in the ultimate bearing margin of safety. This is due to the centerline porosity that is present in thick aluminum plate. While this would result in increased thickness to obtain positive margin, it is, in many cases unavoidable if a part is machined from thick aluminum plate.

Copyright 2017 Lockheed Martin Corporation.
Note: The current version is always the version on the Lockheed Martin network.

Table 5.4.6-1 Summary of Margins of Safety from Example Problems

Description	**Baseline 1.5 e/D; Lug x=L, Lug y = T**	**Same as 1, except e/D = 1.0**	**Same as 1, except Lug x=ST, Lug y = L**	**Same as 1, except Lug x=L, Lug y = ST**
P applied at α = 30	4300 lbs	**2150 lbs**	4300 lbs	4300 lbs
Bearing ultimate	0.01	0.01	-0.15	**-0.15**
Bearing limit	0.48	0.48	0.41	0.41
Net Section @ bx-ultimate	0.16	0.25	**-0.11**	0.14
Net Section @ bx-limit	0.76	0.91	0.76	0.88
Net Section @ by-ultimate	0.40	0.46	0.36	0.28
Net Section @ by-limit	0.99	1.08	0.97	0.99
Net Section @ c-ultimate	0.09	0.20	**-0.13**	0.02
Net Section @ c-limit	0.64	0.81	0.70	0.75

Copyright 2017 Lockheed Martin Corporation.
Note: The current version is always the version on the Lockheed Martin network.

5.4.6.1 Example 1, Typical Lug 1.5 e/D, Off –Axis Loading

Material - Lug
Aluminum Extrusion

Mat'l Properties	L = Lug _x_	T=Lug _y_	S=Lug _z_	
Ult. Stress (Ftu) =	71000	70000	67000	ksi
Yield Stress (Fty) =	61000	59000	55000	ksi
Fcy =	60000	62000	58000	ksi
Fsu =	41000	40000	33500	ksi
elongation (e) =	0.09	0.05	0.04	in/in
	e/d=1.5	**e/d=2.0**		
Fbru =	97000	129000		ksi
Fbry =	83000	98000		ksi

Factors: Ultimate = 1.5
Fitting = K_{ftg} = __1.15_ ***(1.15 recommended for lugs not tested to ultimate)***
Fitting = $K_{ftg\text{-}1imit}$ = __1.0
Lug Service = __1.00__ ***(1.20 recommended)***

Bearing Reductions for Dry Pin

Material	k_{wpb}, e/D ≤ 2.0	k_{wpb}, e/D = 2.5
All aluminums	**0.82**	**1.0**
All other materials	0.90	1.0

Bearing Reductions: Edgewise orientation, Thick Aluminum Plate Only

Bearing Property	k_{br}, e/D = 1.5	k_{br}, e/D = 2.0
F_{bru}	0.85	0.90
F_{bry}	0.95	0.95

Design Bearing Allowables (Lug dimension 'c' = bearing allowable edge distance e)

Bearing Property	c/D = 1.5	c/D = 2.0
$F_{bru\text{-}allow}$	$k_{br}k_{wpb}F_{bru\text{-}1.5}$ = 1.0(0.82)(97000) = 79540 psi	$k_{br}k_{wpb}F_{bru\text{-}2.0}$ = 1.0(0.82)(129000) = 105780 psi
$F_{bry\text{-}allow}$	$k_{br}k_{wpb}F_{bry\text{-}1.5}$ = 1.0(0.82)(83000) = 68060 psi	$k_{br}k_{wpb}F_{bry\text{-}2.0}$ = 1.0(0.82)(98000) = 80360 psi

Calculate lug elongation (e_{lug})
e_{lug} = Minimum [$(e_x + e_y)/2$ -OR- $(0.42e_x + 0.42e_y + 0.16e_z)$] =
(0.09+0.05)/2 = 0.07 or (0.42•0.09+0.42•0.05+0.16•0.04) = 0.0652
e_{lug} = 0.0652 in/in

Low Elongation Factor (req'd if e_{lug} < 0.10)
$R_e = (0.38373 + 0.61728(e_{lug}/0.10))^{0.5} = (0.38373+0.61728(0.0652/0.10))^{0.5}$
=0.8867

Calculate Yield Shear Allowables
$F_{sy\text{-}xz} = (F_{su\text{-}x}+ F_{su\text{-}z})/(F_{tu\text{-}x}+F_{tu\text{-}z})\bullet(F_{ty\text{-}x}+F_{cy\text{-}x}+F_{ty\text{-}z}+F_{cy\text{-}z})/4$ =
(41000+33500)/(71000+67000)•(61000+60000+55000+58000)/4 = 31582 psi
$F_{sy\text{-}yz} = (F_{su\text{-}y}+ F_{su\text{-}z})/(F_{tu\text{-}y}+F_{tu\text{-}z})\bullet(F_{ty\text{-}y}+F_{cy\text{-}y}+F_{ty\text{-}z}+F_{cy\text{-}z})/4$ =
(40000+33500)/(70000+67000)•(59000+62000+55000+58000)/4 = 31385 psi

Sketch

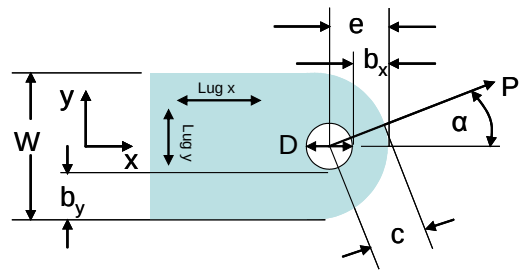

Geometry

c (along load)	0.375	in
e (along x axis)	0.375	
W	0.75	in
D	0.25	in
t	0.25	in

Loads

P	4300	lbs
angle (α)	30	degrees + CCW
P_x	Pcos(α) = 4300cos(30) = 3724	lbs
P_y	Psin(α) = 4300sin(30) = 2150	lbs

Calculate b_x, b_y:

b_x = e – D/2 = 0.375-0.25/2 = 0.25

b_y = (W-D) / 2 = (.75-.25) / 2 = 0.25

Copyright 2017 Lockheed Martin Corporation.
Note: The current version is always the version on the Lockheed Martin network.

Check Parameters for Applicability				
Actual				Allowed
c=	0.375	D= 0.25	c/D= 1.5	$0.75 \le c/D \le 5.5$
W=	0.75	D= 0.25	W/D= 3.0	$1.50 \le W/D \le 7.0$
t_{lug} =	0.25	D= 0.25	t/D= 1.0	$0.30 \le t_{lug}/D \le 1.9$

Solution Step	Calculation		Result
Bearing Analysis	$f_{br\text{-}ult} = P/(Dt_{lug})$ $f_{br\text{-}limit} = P/(1.5Dt_{lug})$	$f_{br\text{-}ult} = 4300/(0.25\bullet0.25)$ $f_{br\text{-}yield} = 4300/(1.5\bullet0.25\bullet0.25)$	$f_{br\text{-}ult}$ = 68800 psi $f_{br\text{-}limit}$ = 45867 psi
Calculate Bearing Margin of Safety	M.S. (ultimate) = $F_{bru\text{-}allow}$ / ($K_{ftg}f_{br\text{-}ult}$) -1 M.S. (yield) = ($F_{bry\text{-}allow}$) / ($K_{ftg\text{-}limit}f_{br\text{-}limit}$)-1	M.S. (ultimate)= (79540)/ [1.15(68800)] – 1 = 0.01 M.S. (yield)= (68060)/[1.0(45867)]-1 = 0.48	**M.S. (ult) = 0.01** **M.S. (yield) =0.48** **Bearing, Lug**
Lug Net Section at b_x analysis	$f_t = P_y / (2(1.1)b_xt_{lug})$ $f_s = P_x / [2(1.1)(b_x+0.234D/2)t_{lug}]$	$f_t = 2150/(2\bullet1.1\bullet0.25\bullet0.25)$ $f_s = 3724/ [2\bullet1.1\bullet(0.25+0.234\bullet0.25/2)\bullet0.25]$	f_t = 15636 psi f_s =24247 psi
Calculate Net Section Ultimate Margin of Safety at b_x	$R_t = K_{ftg}f_t / (R_e F_{tu\text{-}y})$ $R_s = K_{ftg}f_s / (R_e F_{su\text{-}x})$ M.S. (ultimate) = 1 / $(R_t^{1.6} + R_s^{1.6})^{0.625}$ -1	R_t =1.15(15636)/[0.8867(70000)] =0.290 R_s = 1.15(24247)/ [(0.8867(41000)] = 0.767 M.S. (ultimate)= 1 / $(0.290^{1.6} + 0.767^{1.6})^{0.625}$ -1	**M.S. (ult) = 0.16** **Net Section at b_x, Lug**
Calculate Net Section Yield Margin of Safety at b_x	$R_t = K_{ftg\text{-}limit}f_t / (1.5F_{ty\text{-}y})$ $R_s = K_{ftg\text{-}limit}f_s / (1.5F_{sy\text{-}xz})$ M.S. (yield) = 1 / $(R_t^{1.6} + R_s^{1.6})^{0.625}$ -1	R_t = 1.0(15636)/[1.5(59000)] =0.177 R_s = 1.0(24247)/[1.5(31582)] =0.512 M.S. (yield)= 1/ $(0.177^{1.6} + 0.512^{1.6})^{0.625}$ -1	**M.S. (yield) = 0.76** **Net Section at b_x, Lug**
Lug Net Section at b_y analysis	$f_t = P_x / (2b_yt_{lug})$ $f_s = P_y / [2(b_y+0.234D/2)t_{lug}]$	$f_t = 3724/(2\bullet0.25\bullet0.25)$ f_s = 2150/ [2{0.25+0.234(.25/2)}0.25]	f_t = 29792 psi f_s= 15398 psi
Calculate Net Section Ultimate Margin of Safety at b_y	$R_t = K_{ftg}f_t / (F_{tu\text{-}x})$ $R_s = K_{ftg}f_s / (F_{su\text{-}y})$ M.S. (ultimate) = 1 / $(R_t^{1.6} + R_s^{1.6})^{0.625}$ -1	R_t = 1.15(29792) / 71000 = 0.482 R_s = 1.15(15398) / 40000 = 0.443 M.S. (ultimate)= 1 / $(0.482^{1.6}+0.443^{1.6})^{0.625}$ -1	**M.S. (ult) = 0.40** **Net Section at b_y, Lug**
Calculate Net Section Yield Margin of Safety at b_y	$R_t = K_{ftg\text{-}limit}f_t / (1.5F_{ty\text{-}x})$ $R_s = K_{ftg\text{-}limit}f_s / (1.5F_{sy\text{-}yz})$ M.S. (yield) = 1 / $(R_t^{1.6} + R_s^{1.6})^{0.625}$ -1	R_t = 1.0(29792) / [1.5(61000)] = 0.326 R_s = 1.0(15398)/[1.5(31385)] = 0.327 M.S. (yield)= 1/ $(0.326^{1.6} + 0.327^{1.6})^{0.625}$-1	**M.S. (yield) = 0.99** **Net Section at b_y, Lug**
Lug Net Section at c analysis	$f_s = P / [2\ t_{lug}\ (c\text{-}D/2 +0.234D/2) \bullet \{1.1\text{-}0.1(\alpha/90)\}]$	$f_s = 4300 / [2(0.25)(0.375\text{-}0.25/2+0.234\bullet0.25/2)\ \{1.1\text{-}(0.1)(30/90)\}]$	f_s = 28872 psi
Calculate Net Section Ultimate Margin of Safety at c	$F_{su\text{-}allow} = R_e[F_{su\text{-}x} + (F_{su\text{-}y}\text{-}F_{su\text{-}x})(\alpha/90)]$ M.S. (ultimate) = $F_{su\text{-}allow}$ / ($K_{ftg}f_s$) - 1	$F_{su\text{-}allow}$ = 0.8867[41000 + (40000 – 41000)(30/90)]= 36059 M.S.(ultimate)=36059 / [1.15(28872)] -1	**M.S. (ult) = 0.09** **Net Section at c, Lug**
Calculate Net Section Yield Margin of Safety at c	$F_{sy\text{-}allow} = F_{sy\text{-}xz} + (F_{sy\text{-}yz}\text{-}F_{sy\text{-}xz})(\alpha/90)$= M.S. (yield) = $(1.5F_{sy\text{-}allow})/(K_{ftg\text{-}limit}f_s)$ - 1	$F_{sy\text{-}allow}$ = 31582 + (31385-31582) (30/90) = 31516 psi M.S. (yield)= 1.5(31516)/[1.0(28872)]-1	**M.S. (yield) = 0.64** **Net Section at c, Lug**

Copyright 2017 Lockheed Martin Corporation.
Note: The current version is always the version on the Lockheed Martin network.

5.4.6.2 Example 2, Lug with e/D = 1.0, Off –Axis Loading

This lug is the same as the previous example, except the edge distance has been lowered to 1.0 e/D

Material - Lug
Aluminum Extrusion

Mat'l Properties	L = Lug _x_	T=Lug _y_	S=Lug _z_	
Ult. Stress (Ftu) =	71000	70000	67000	ksi
Yield Stress (Fty) =	61000	59000	55000	ksi
Fcy =	60000	62000	58000	ksi
Fsu =	41000	40000	33500	ksi
elongation (e) =	0.09	0.05	0.04	in/in
	e/d=1.5	**e/d=2.0**		
Fbru =	97000	129000		ksi
Fbry =	83000	98000		ksi

Factors: Ultimate = 1.5
Fitting = K_{ftg} = __1.15_ ***(1.15 recommended for lugs not tested to ultimate)***
Fitting = $K_{ftg\text{-}1imit}$ = __1.0
Lug Service = __1.00__ ***(1.20 recommended)***

Bearing Reductions for Dry Pin

Material	k_{wpb}, e/D ≤ 2.0	k_{wpb}, e/D = 2.5
All aluminums	**0.82**	**1.0**
All other materials	0.90	1.0

Bearing Reductions: Edgewise orientation, Thick Aluminum Plate Only

Bearing Property	k_{br}, e/D = 1.5	k_{br}, e/D = 2.0
F_{bru}	0.85	0.90
F_{bry}	0.95	0.95

Design Bearing Allowables (Lug dimension 'c' = bearing allowable edge distance e)

Bearing Property	c/D = 1.5	c/D = 2.0	c/D_{actual} = 1.0
$F_{bru\text{-}allow}$	$k_{br}\, k_{wpb}\, F_{bru\text{-}1.5}$ = 1.0(0.82)(97000) = 79540 psi	$k_{br}\, k_{wpb}\, F_{bru\text{-}2.0}$ = 1.0(0.82)(129000) = 105780 psi	Interpolate 0 psi at c/D=0.5 39770 psi
$F_{bry\text{-}allow}$	$k_{br}\, k_{wpb}\, F_{bry\text{-}1.5}$ = 1.0(0.82)(83000) = 68060 psi	$k_{br}\, k_{wpb}\, F_{bry\text{-}2.0}$ = 1.0(0.82)(98000) = 80360 psi	Interpolate 0 psi at c/D=0.5 34030 psi

Calculate lug elongation (e_{lug})
e_{lug} = Minimum [$(e_x + e_y)/2$ -OR- $(0.42e_x + 0.42e_y + 0.16e_z)$] =
(0.09+0.05)/2 = 0.07 or (0.42•0.09+0.42•0.05+0.16•0.04) = 0.0652
e_{lug} = 0.0652 in/in

Low Elongation Factor (req'd if e_{lug} < 0.10)
$R_e = (0.38373 + 0.61728(e_{lug}/0.10))^{0.5} = (0.38373+0.61728(0.0652/0.10))^{0.5}$
=0.8867

Calculate Yield Shear Allowables
$F_{sy\text{-}xz} = (F_{su\text{-}x}+ F_{su\text{-}z})/(F_{tu\text{-}x}+F_{tu\text{-}z})\bullet(F_{ty\text{-}x}+F_{cy\text{-}x}+F_{ty\text{-}z}+F_{cy\text{-}z})/4$ =
(41000+33500)/(71000+67000)•(61000+60000+55000+58000)/4 = 31582 psi
$F_{sy\text{-}yz} = (F_{su\text{-}y}+ F_{su\text{-}z})/(F_{tu\text{-}y}+F_{tu\text{-}z})\bullet(F_{ty\text{-}y}+F_{cy\text{-}y}+F_{ty\text{-}z}+F_{cy\text{-}z})/4$ =
(40000+33500)/(70000+67000)•(59000+62000+55000+58000)/4 = 31385 psi

Sketch

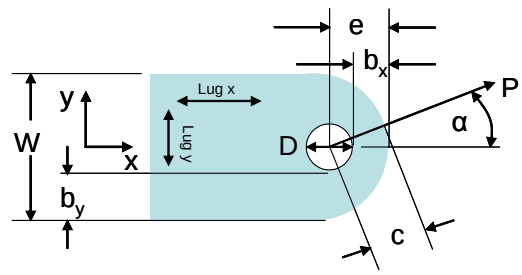

Geometry

c (along load)	0.25	in
e (along x axis)	0.25	
W	0.50	in
D	0.25	in
t	0.25	in

Loads

P	2150	lbs
angle (α)	30	degrees + CCW
P_x	Pcos(α) = 2150cos(30) = 1862	lbs
P_y	Psin(α) = 2150sin(30) = 1075	lbs

Calculate b_x, b_y:

b_x = e – D/2 = 0.250-0.25/2 = 0.125

b_y = (W-D) / 2 = (.50-.25) / 2 = 0.125

Copyright 2017 Lockheed Martin Corporation.
Note: The current version is always the version on the Lockheed Martin network.

Check Parameters for Applicability			
Actual			Allowed
c= 0.250	D= 0.25	c/D= 1.0	$0.75 \le c/D \le 5.5$
W= 0.50	D= 0.25	W/D= 2.0	$1.50 \le W/D \le 7.0$
t_{lug} = 0.25	D= 0.25	t/D= 1.0	$0.30 \le t_{lug}/D \le 1.9$

Solution Step	Calculation		Result
Bearing Analysis	$f_{br\text{-}ult} = P/(Dt_{lug})$ $f_{br\text{-}limit} = P/(1.5Dt_{lug})$	$f_{br\text{-}ult} = 2150/(0.25\bullet0.25)$ $f_{br\text{-}yield} = 2150/(1.5\bullet0.25\bullet0.25)$	$f_{br\text{-}ult}$ = 34400 psi $f_{br\text{-}limit}$ = 22933 psi
Calculate Bearing Margin of Safety	M.S. (ultimate) = $F_{bru\text{-}allow}$ / ($K_{ftg}f_{br\text{-}ult}$) -1 M.S. (yield) = $F_{bry\text{-}allow}$ / ($K_{ftg\text{-}limit}f_{br\text{-}limit}$)-1	M.S. (ultimate)= 39770/[1.15(34400)] – 1 = M.S. (yield)= 34030/[1.0(22933)]-1 = 0.48	**M.S. (ult) = 0.01** **M.S. (yield) =0.48** **Bearing, Lug**
Lug Net Section at b_x analysis	$f_t = P_y / [2(1.1)b_xt_{lug}]$ $f_s = P_x / [2(1.1)(b_x+0.234D/2)t_{lug}]$	$f_t = 1075/(2\bullet1.1\bullet0.125\bullet0.25)$ $f_s = 1862 /[2(1.1)(0.125+0.234\bullet0.25/2)\bullet0.25]$	f_t = 15636 psi f_s = 21948 psi
Calculate Net Section Ultimate Margin of Safety at b_x	$R_t = K_{ftg}f_t / (R_e F_{tu\text{-}y})$ $R_s = K_{ftg}f_s / (R_e F_{su\text{-}x})$ M.S. (ultimate) = 1 / $(R_t^{1.6} + R_s^{1.6})^{0.625}$ -1	R_t = 1.15(15636)/[0.8867(70000)] =0.290 R_s = 1.15(21948)/ [0.8867(41000)]= 0.694 M.S. (ultimate)= $(.290^{1.6} + .694^{1.6})^{0.625}$ -1	**M.S. (ult) = 0.25** **Net Section at b_x, Lug**
Calculate Net Section Yield Margin of Safety at b_x	$R_t = K_{ftg\text{-}limit} f_t / (1.5F_{ty\text{-}y})$ $R_s = K_{ftg\text{-}limit} f_s / (1.5F_{sy\text{-}xz})$ M.S. (yield) = 1 / $(R_t^{1.6} + R_s^{1.6})^{0.625}$ -1	R_t = 1.0(15636)/[1.5(59000)] =0.177 R_s = 1.0(21948)/[1.5(31582)] =0.463 M.S. (yield)= 1/ $(.177^{1.6} + .463^{1.6})^{0.625}$ -1	**M.S. (yield) =0.91** **Net Section at b_x, Lug**
Lug Net Section at b_y analysis	$f_t = P_x / (2b_yt_{lug})$ $f_s = P_y / [2(b_y+0.234D/2)t_{lug}]$	$f_t = 1862/(2\bullet0.125\bullet0.25)$ $f_s = 1075/ [2(0.125+0.234\bullet0.25/2)0.25]$	f_t = 29792 psi f_s= 13938 psi
Calculate Net Section Ultimate Margin of Safety at b_y	$R_t = K_{ftg}f_t / (F_{tu\text{-}x})$ = $R_s = K_{ftg}f_s / (F_{su\text{-}y})$ = M.S. (ultimate) = 1 / $(R_t^{1.6} + R_s^{1.6})^{0.625}$ -1	R_t =1.15(29792) / 71000 = 0.482 R_s =1.15(13938) / 40000 = 0.401 M.S. (ultimate)= 1 / $(0.482^{1.6}+0.401^{1.6})^{0.625}$ -1	**M.S. (ult) = 0.46** **Net Section at b_y, Lug**
Calculate Net Section Yield Margin of Safety at b_y	$R_t = K_{ftg\text{-}limit}f_t / (1.5F_{ty\text{-}x})$ = $R_s = K_{ftg\text{-}limit}f_s / (1.5F_{sy\text{-}yz})$ = M.S. (yield) = 1 / $(R_t^{1.6} + R_s^{1.6})^{0.625}$-1	R_t = 1.0(29792) / [1.5(61000)] = 0.326 R_s = 1.0(13938)/[1.5(31385)] = 0.296 M.S. (yield)= 1/ $(.326^{1.6} + .296^{1.6})^{0.625}$ -1	**M.S. (yield) =1.08** **Net Section at b_y, Lug**
Lug Net Section at c analysis	$f_s = P / [2\ t_{lug}\ (c\text{-}D/2 +0.234D/2) \bullet \{1.1\text{-}0.1(\alpha/90)\}]$	$f_s = 2150 / [2(0.25)(0.250\text{-}0.25/2+0.234\bullet0.25/2)\{1.1\text{-}0.1(30/90)\}]$	f_s = 26135 psi
Calculate Net Section Ultimate Margin of Safety at c	$F_{su\text{-}allow} = R_e[F_{su\text{-}x} + (F_{su\text{-}y}\text{-}F_{su\text{-}x})(\alpha/90)]$ M.S. (ultimate) = $F_{su\text{-}allow}$ / ($K_{ftg}f_s$) - 1	$F_{su\text{-}allow}$ = 0.8867[41000 + (40000 – 41000)(30/90)] = 36059 M.S.(ultimate)=36059 /[1.15(26135)]-1	**M.S. (ult) = 0.20** **Net Section at c, Lug**
Calculate Net Section Yield Margin of Safety at c	$F_{sy\text{-}allow} = F_{sy\text{-}xz} + (F_{sy\text{-}yz}\text{-}F_{sy\text{-}xz})(\alpha/90)$= M.S. (yield) = ($1.5F_{sy\text{-}allow}$) / ($K_{ftg\text{-}limit}f_s$)- 1	$F_{sy\text{-}allow}$ = [31582 + (31385-31582) (30/90)] = 31516 psi M.S. (yield)= 1.5(31516)/[1.0(26135)]-1	**M.S. (yield) =0.81** **Net Section at c, Lug**

Copyright 2017 Lockheed Martin Corporation.
Note: The current version is always the version on the Lockheed Martin network.

5.4.6.3 Example 3 Lug with Lug x – Material ST

This lug is the same as Example 1, except the x direction of the lug is the material ST in thick aluminum plate which puts the lug in an orientation requiring the edgewise bearing reductions and ST tension strength reductions.

Material – Lug Aluminum Plate

Mat'l Properties	L = Lug _z_	T=Lug _y_	S=Lug _x_	
Ult. Stress (Ftu) =	71000	70000	67000	ksi
Yield Stress (Fty) =	61000	59000	55000	ksi
Fcy =	60000	62000	58000	ksi
Fsu =	41000	40000	33500	ksi
elongation (e) =	0.09	0.05	0.04	in/in
	e/d=1.5	**e/d=2.0**		
Fbru =	97000	129000		ksi
Fbry =	83000	98000		ksi

Factors: Ultimate = 1.5

Fitting = K_{ftg} = __1.15_ ***(1.15 recommended for lugs not tested to ultimate)***

Lug Service = __1.00__ ***(1.20 recommended)***

Bearing Reductions for Dry Pin

Material	k_{wpb}, e/D ≤ 2.0	k_{wpb}, e/D = 2.5
All aluminums	**0.82**	**1.0**
All other materials	0.90	1.0

Bearing Reductions: Edgewise orientation, Thick Aluminum Plate Only

Bearing Property	k_{br}, e/D = 1.5	k_{br}, e/D = 2.0
F_{bru}	**0.85**	0.90
F_{bry}	**0.95**	0.95

Design Bearing Allowables (Lug dimension 'c' = bearing allowable edge distance e)

Bearing Property	c/D = 1.5	c/D = 2.0
$F_{bru\text{-}allow}$	$k_{br}\ k_{wpb}\ F_{bru\text{-}1.5}$ = 0.85(0.82)(97000) = 67609 psi	$k_{br}\ k_{wpb}\ F_{bru\text{-}2.0}$ = 0.90(0.82)(129000) = 95202 psi
$F_{bry\text{-}allow}$	$k_{br}\ k_{wpb}\ F_{bry\text{-}1.5}$ = 0.95(0.82)(83000) = 64657 psi	$k_{br}\ k_{wpb}\ F_{bry\text{-}2.0}$ = 0.95(0.82)(98000) = 76342 psi

Calculate lug elongation (e_{lug})

e_{lug} = Minimum [$(e_x + e_y)/2$ -OR- $(0.42e_x + 0.42e_y + 0.16e_z)$] =
(0.04+0.05)/2 = 0.045 or (0.42•0.04+0.42•0.05+0.16•0.09) = 0.0522
e_{lug} = 0.045 in/in

Low Elongation Factor (req'd if e_{lug} < 0.10)

$R_e = (0.38373 + 0.61728(e_{lug}/0.10))^{0.5} = (0.38373+0.61728(0.045/0.10))^{0.5}$
=0.8133

Calculate Yield Shear Allowables

$F_{sy\text{-}xz} = (F_{su\text{-}x}+ F_{su\text{-}z})/(F_{tu\text{-}x}+F_{tu\text{-}z})\bullet(F_{ty\text{-}x}+F_{cy\text{-}x}+F_{ty\text{-}z}+F_{cy\text{-}z})/4$ =
(33500+41000)/(67000+71000)•(55000+58000+61000+60000)/4 = 31582 psi

$F_{sy\text{-}yz} = (F_{su\text{-}y}+ F_{su\text{-}z})/(F_{tu\text{-}y}+F_{tu\text{-}z})\bullet(F_{ty\text{-}y}+F_{cy\text{-}y}+F_{ty\text{-}z}+F_{cy\text{-}z})/4$ =
(40000+41000)/(70000+71000)•(59000+62000+61000+60000)/4 = 34755 psi

Sketch

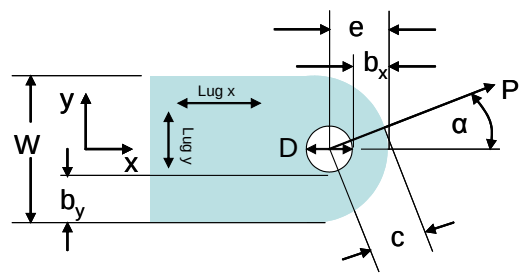

Geometry

c (along load)	0.375	in
e (along x axis)	0.375	
W	0.75	in
D	0.25	in
t	0.25	in

Loads

P	4300	lbs
angle (α)	30	degrees + CCW
P_x	Pcos(α) = 4300cos(30) = 3724	lbs
P_y	Psin(α) = 4300sin(30) = 2150	lbs

Calculate b_x, b_y:

b_x = e – D/2 = 0.375-0.25/2 = 0.25

b_y = (W-D) / 2 = (.75-.25) / 2 = 0.25

Copyright 2017 Lockheed Martin Corporation.
Note: The current version is always the version on the Lockheed Martin network.

Check Parameters for Applicability			
Actual			Allowed
c= 0.375	D= 0.25	c/D= 1.5	$0.75 \le c/D \le 5.5$
W= 0.75	D= 0.25	W/D= 3.0	$1.50 \le W/D \le 7.0$
t_{lug} = 0.25	D= 0.25	t/D= 1.0	$0.30 \le t_{lug}/D \le 1.9$

Solution Step	Calculation		Result
Bearing Analysis	$f_{br\text{-}ult} = P/(Dt_{lug})$ $f_{br\text{-}limit} = P/(1.5Dt_{lug})$	$f_{br\text{-}ult}$ = 4300/(0.25•0.25) $f_{br\text{-}yield}$ = 4300/(1.5•0.25•0.25)	$f_{br\text{-}ult}$ = 68800 psi $f_{br\text{-}limit}$ = 45867 psi
Calculate Bearing Margin of Safety	M.S. (ultimate) = $F_{bru\text{-}allow}$ / ($K_{ftg}f_{br\text{-}ult}$) -1 M.S. (yield) = $F_{bry\text{-}allow}$/ ($K_{ftg\text{-}limit}f_{br\text{-}limit}$)-1	M.S. (ultimate)= 67609/ [1.15(68800)] – 1 = -0.15 M.S. (yield)= 64657/[1.0(45867)]-1 = 0.0.41	**M.S. (ult) = -0.15** **M.S. (yield) =0.41** **Bearing, Lug**
Lug Net Section at b_x analysis	$f_t = P_y / [2(1.1)b_x t_{lug}]$ $f_s = P_x / [2(1.1)(b_x+0.234D/2)t_{lug}]$	f_t = 2150/[2(1.1)(0.25)(0.25)] f_s = 3724/[2(1.1)(0.25+0.234•0.25/2) 0.25]	f_t = 15636 psi f_s =24247 psi
Calculate Net Section Ultimate Margin of Safety at b_x	$R_t = K_{ftg}f_t / [R_e (F_{tu\text{-}y})]$ $R_s = K_{ftg}f_s / [R_e (F_{su\text{-}x})]$ M.S. (ultimate) = 1 / $(R_t^{1.6} + R_s^{1.6})^{0.625}$ -1	R_t = 1.15(15636)/[0.8133(70000)] =0.316 R_s = 1.15(24247)/ [0.8133(33500)]= 1.023 M.S. (ultimate)= 1 / $(0.316^{1.6} + 1.023^{1.6})^{0.625}$ -1	**M.S. (ult) = -0.11** **Net Section at b_x, Lug**
Calculate Net Section Yield Margin of Safety at b_x	$R_t = K_{ftg\text{-}limit}f_t / [1.5F_{ty\text{-}y}]$ $R_s = K_{ftg\text{-}limit}f_s / [(1.5F_{sy\text{-}xz}]$ M.S. (yield) = 1 / $(R_t^{1.6} + R_s^{1.6})^{0.625}$ -1	R_t = 1.0(15636)/[1.5(59000)] =0.177 R_s = 1.0(24247)/[1.5(31582)] =0.512 M.S. (yield)= 1/ $(.177^{1.6} + .512^{1.6})^{0.625}$ -1	**M.S. (yield) =0.76** **Net Section at b_x, Lug**
Lug Net Section at b_y analysis	$f_t = P_x / (2b_y t_{lug})$ $f_s = P_y / [2(b_y+0.234D/2)t_{lug}]$	f_t = 3724/(2•0.25•0.25) f_s = 2150/ [2(0.25+0.234•.25/2)0.25]	f_t = 29792 psi f_s= 15398 psi
Calculate Net Section Ultimate Margin of Safety at b_y	$R_t = K_{ftg}f_t / F_{tu\text{-}x}$ = $R_s = K_{ftg}f_s / F_{su\text{-}y}$ = M.S. (ultimate) = 1 / $(R_t^{1.6} + R_s^{1.6})^{0.625}$ -1	R_t = 1.15(29792) / 67000 = 0.512 R_s = 1.15(15398) / 40000 = 0.443 M.S. (ultimate)= 1 / $(0.512^{1.6}+0.443^{1.6})^{0.625}$ -1	**M.S. (ult) = 0.36** **Net Section at b_y, Lug**
Calculate Net Section Yield Margin of Safety at b_y	$R_t = K_{ftg\text{-}limit}f_t / (1.5F_{ty\text{-}x})$ $R_s = K_{ftg\text{-}limit}f_s / (1.5F_{sy\text{-}yz})$ M.S. (yield) = 1 / $(R_t^{1.6} + R_s^{1.6})^{0.625}$ -1	R_t = 1.0(29792) / [1.5(55000)] = 0.361 R_s = 1.0(15398)/[1.5(34755)]= 0.295 M.S. (yield)= 1/ $(.361^{1.6} + .295^{1.6})^{0.625}$ -1	**M.S. (yield) =0.97** **Net Section at b_y, Lug**
Lug Net Section at c analysis	$f_s = P / [2\, t_{lug}\, (c\text{-}D/2 +0.234•D/2)\{1.1\text{-}0.1(\alpha/90)\}]$	f_s = 4300 / [2(0.25)(0.375-0.25/2+0.234•0.25/2)• {1.1-0.1(30/90)}]	f_s = 28872 psi
Calculate Net Section Ultimate Margin of Safety at c	$F_{su\text{-}allow} = R_e[F_{su\text{-}x} + (F_{su\text{-}y}\text{-}F_{su\text{-}x})(\alpha/90)]$ M.S. (ultimate) = $F_{su\text{-}allow}$ / ($K_{ftg}f_s$) - 1	$F_{su\text{-}allow}$ = 0.8133[33500 + (40000 – 33500)(30/90)] = 29008 psi M.S.(ultimate)=29008 /[1.15(28872)]-1	**M.S. (ult) = -0.13** **Net Section at c, Lug**
Calculate Net Section Yield Margin of Safety at c	$F_{sy\text{-}allow} = F_{sy\text{-}xz} + (F_{sy\text{-}yz}\text{-}F_{sy\text{-}xz})(\alpha/90)$= M.S. (yield) = $1.5F_{sy\text{-}allow}$ / ($K_{ftg\text{-}limit}f_s$)- 1	$F_{sy\text{-}allow}$ = 31582 + (34755-31582)• (30/90) = 32639 psi M.S. (yield)= 1.5(32639)/[1.0(28872)] -1	**M.S. (yield) =0.70** **Net Section at c, Lug**

Copyright 2017 Lockheed Martin Corporation.
Note: The current version is always the version on the Lockheed Martin network.

5.4.6.4 Example 4 Lug with Lug Oriented Edgewise in Thick Aluminum Plate

This lug is the same as Example 1, except the x direction of the lug is the material L and the y lug direction is ST, which puts the lug in an orientation requiring the edgewise bearing reductions due to porosity of thick aluminum plate.

Material - Lug
Aluminum Extrusion

Mat'l Properties	L = Lug _x_	T=Lug _z_	S=Lug _y_	
Ult. Stress (Ftu) =	71000	70000	67000	ksi
Yield Stress (Fty) =	61000	59000	55000	ksi
Fcy =	60000	62000	58000	ksi
Fsu =	41000	40000	33500	ksi
elongation (e) =	0.09	0.05	0.04	in/in
	e/d=1.5	**e/d=2.0**		
Fbru =	97000	129000		ksi
Fbry =	83000	98000		ksi

Factors: Ultimate = 1.5
Fitting = K_{ftg} = __1.15_ ***(1.15 recommended for lugs not tested to ultimate)***
Fitting = $K_{ftg\text{-}1imit}$ = __1.0
Lug Service = __1.00__ ***(1.20 recommended)***

Bearing Reductions for Dry Pin

Material	k_{wpb}, e/D ≤ 2.0	k_{wpb}, e/D = 2.5
All aluminums	**0.82**	**1.0**
All other materials	0.90	1.0

Bearing Reductions: Edgewise orientation, Thick Aluminum Plate Only

Bearing Property	k_{br}, e/D = 1.5	k_{br}, e/D = 2.0
F_{bru}	**0.85**	0.90
F_{bry}	**0.95**	0.95

Design Bearing Allowables (Lug dimension 'c' = bearing allowable edge distance e)

Bearing Property	c/D = 1.5	c/D = 2.0
$F_{bru\text{-}allow}$	$k_{br}k_{wpb}F_{bru\text{-}1.5}$ = 0.85(0.82)(97000)= 67609 psi	$k_{br}k_{wpb}F_{bru\text{-}2.0}$ = 0.90(0.82)(129000)= 95202 psi
$F_{bry\text{-}allow}$	$k_{br}k_{wpb}F_{bry\text{-}1.5}$ = 0.95(0.82)(83000)= 64657 psi	$k_{br}k_{wpb}F_{bry\text{-}2.0}$ = 0.95(0.82)(98000) = 76342 psi

Calculate lug elongation (e_{lug})
e_{lug} = Minimum [$(e_x + e_y)/2$ -OR- $(0.42e_x + 0.42e_y + 0.16e_z)$] =
(0.09+0.04)/2 = 0.065 or (0.42•0.09+0.42•0.04+0.16•0.05) = 0.0626
e_{lug} = 0.0626 in/in

Low Elongation Factor (req'd if e_{lug} < 0.10)
$R_e = (0.38373 + 0.61728(e_{lug}/0.10))^{0.5} = (0.38373+0.61728(0.0626/0.10))^{0.5}$
=0.8776

Calculate Yield Shear Allowables
$F_{sy\text{-}xz} = (F_{su\text{-}x}+ F_{su\text{-}z})/(F_{tu\text{-}x}+F_{tu\text{-}z})•(F_{ty\text{-}x}+F_{cy\text{-}x}+F_{ty\text{-}z}+F_{cy\text{-}z})/4$ =
(41000+40000)/(71000+70000)•(61000+60000+59000+62000)/4 = 34755 psi
$F_{sy\text{-}yz} = (F_{su\text{-}y}+ F_{su\text{-}z})/(F_{tu\text{-}y}+F_{tu\text{-}z})•(F_{ty\text{-}y}+F_{cy\text{-}y}+F_{ty\text{-}z}+F_{cy\text{-}z})/4$ =
(33500+40000)/(67000+70000)•(55000+58000+59000+62000)/4 = 31385 psi

Sketch

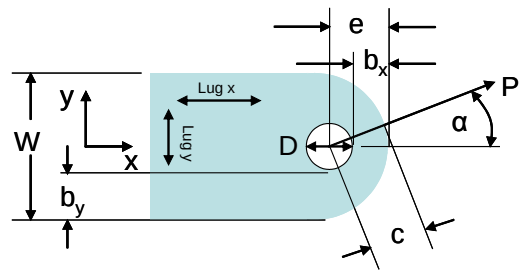

Geometry

c (along load)	0.375	in
e (along x axis)	0.375	
W	0.75	in
D	0.25	in
t	0.25	in

Loads

P	4300	lbs
angle (α)	30	degrees + CCW
P_x	Pcos(α) = 4300cos(30) = 3724	lbs
P_y	Psin(α) = 4300sin(30) = 2150	lbs

Calculate b_x, b_y:

b_x = e – D/2 = 0.375-0.25/2 = 0.25

b_y = (W-D) / 2 = (.75-.25) / 2 = 0.25

Copyright 2017 Lockheed Martin Corporation.
Note: The current version is always the version on the Lockheed Martin network.

Check Parameters for Applicability			
Actual			Allowed
c= 0.375	D= 0.25	c/D= 1.5	$0.75 \le c/D \le 5.5$
W= 0.75	D= 0.25	W/D= 3.0	$1.50 \le W/D \le 7.0$
t_{lug} = 0.25	D= 0.25	t/D= 1.0	$0.30 \le t_{lug}/D \le 1.9$

Solution Step	Calculation		Result
Bearing Analysis	$f_{br\text{-}ult} = P/(Dt_{lug})$ $f_{br\text{-}limit} = P/(1.5Dt_{lug})$	$f_{br\text{-}ult} = 4300/(0.25\bullet0.25)$ $f_{br\text{-}yield} = 4300/(1.5\bullet0.25\bullet0.25)$	$f_{br\text{-}ult}$ = 68800 psi $f_{br\text{-}limit}$ = 45867 psi
Calculate Bearing Margin of Safety	M.S. (ultimate) = $F_{bru\text{-}allow}$ / ($K_{ftg}f_{br\text{-}ult}$) -1 M.S. (yield) = $F_{bry\text{-}allow}$/ ($K_{ftg\text{-}limit}f_{br\text{-}limit}$)-1	M.S. (ultimate)= 67609/ [1.15(68800)] – 1 = -0.15 M.S. (yield)= 64657/[1.0(45867)]-1 = 0.41	**M.S. (ult) = -0.15** **M.S. (yield) =0.41** **Bearing, Lug**
Lug Net Section at b_x analysis	$f_t = P_y / [2(1.1)b_xt_{lug}]$ $f_s = P_x / [2(1.1)(b_x+0.234D/2)t_{lug}]$	$f_t = 2150/(2\bullet0.25\bullet0.25\bullet1.1)$ $f_s = 3724/[2(1.1)(0.25+0.234\bullet0.25/2)\bullet0.25]$	f_t = 15636 psi f_s =24247 psi
Calculate Net Section Ultimate Margin of Safety at b_x	$R_t = K_{ftg}f_t / (R_e F_{tu\text{-}y})$ $R_s = K_{ftg}f_s / (R_e F_{su\text{-}x})$ M.S. (ultimate) = 1 / ($R_t^{1.6} + R_s^{1.6}$)$^{0.625}$ -1	$R_t = 1.15(15636)/[0.8776(67000)]$ =0.306 $R_s = 1.15(24247)/ [0.8776(41000)]$ = 0.774 M.S. (ultimate)= 1 / ($0.306^{1.6} + 0.774^{1.6}$)$^{0.625}$ -1	**M.S. (ult) = 0.14** **Net Section at b_x, Lug**
Calculate Net Section Yield Margin of Safety at b_x	$R_t = K_{ftg\text{-}limit}f_t / (1.5F_{ty\text{-}y})$ $R_s = K_{ftg\text{-}limit}f_s / (1.5F_{sy\text{-}xz})$ M.S. (yield) = 1 / ($R_t^{1.6} + R_s^{1.6}$)$^{0.625}$ -1	$R_t = 1.0(15636)/[1.5(55000)]$ =0.190 $R_s = 1.0(24247)/[1.5(34755)]$ =0.465 M.S. (yield)= 1/ ($.190^{1.6} + .465^{1.6}$)$^{0.625}$ -1	**M.S. (yield) =0.88** **Net Section at b_x, Lug**
Lug Net Section at b_y analysis	$f_t = P_x / (2b_yt_{lug})$ $f_s = P_y / [2(b_y+0.234D/2)t_{lug}]$	$f_t = 3724/(2\bullet0.25\bullet0.25)$ $f_s = 2150/ [2(0.25+0.234\bullet0.25/2)0.25]$	f_t = 29792 psi f_s= 15398 psi
Calculate Net Section Ultimate Margin of Safety at b_y	$R_t = K_{ftg}f_t / F_{tu\text{-}x}$= $R_s = K_{ftg}f_s / F_{su\text{-}y}$= M.S. (ultimate) = 1 / ($R_t^{1.6} + R_s^{1.6}$)$^{0.625}$ -1	$R_t = 1.15(29792) / 71000 = 0.482$ $R_s = 1.15(15398)/ 33500 = 0.529$ M.S. (ultimate)= 1 / ($0.482^{1.6}+0.529^{1.6}$)$^{0.625}$ -1	**M.S. (ult) = 0.28** **Net Section at b_y, Lug**
Calculate Net Section Yield Margin of Safety at b_y	$R_t = K_{ftg\text{-}limit}f_t / (1.5F_{ty\text{-}x})$ $R_s = K_{ftg\text{-}limit}f_s / (1.5F_{sy\text{-}yz})$ M.S. (yield) = 1 / ($R_t^{1.6} + R_s^{1.6}$)$^{0.625}$ -1	$R_t = 1.0(29792) / [1.5(61000)]$ = 0.326 $R_s = 1.0(15398)/[1.5(31385)]$ = 0.327 M.S. (yield)= 1/ ($.326^{1.6} + .319^{1.6}$)$^{0.625}$ -1	**M.S. (yield) =0.99** **Net Section at b_y, Lug**
Lug Net Section at c analysis	$f_s = P / [2 t_{lug}(c-D/2 +0.234D/2)\bullet \{1.1-0.1(\alpha/90)\}]$	$f_s = 4300 / [2(0.25)(0.375-0.25/2+0.234\bullet0.25/2)\bullet \{1.1-0.1(30/90)\}]$	f_s = 28872 psi
Calculate Net Section Ultimate Margin of Safety at c	$F_{su\text{-}allow} = R_e[F_{su\text{-}x} + (F_{su\text{-}y}-F_{su\text{-}x})(\alpha/90)]$ M.S. (ultimate) = $F_{su\text{-}allow}$ / ($K_{ftg}f_s$) - 1	$F_{su\text{-}allow} = 0.8776[41000 + (33500 – 41000)(30/90)]$= 33788 psi M.S.(ultimate)=33788 /[1.15(28872)]-1	**M.S. (ult) = 0.02** **Net Section at c, Lug**
Calculate Net Section Yield Margin of Safety at c	$F_{sy\text{-}allow} = F_{sy\text{-}xz} + (F_{sy\text{-}yz}-F_{sy\text{-}xz}) (\alpha/90)$= M.S. (yield) = $1.5F_{sy\text{-}allow}$ / ($K_{ftg\text{-}limit}f_s$) - 1	$F_{sy\text{-}allow} = 34755 + (31385-34755) (30/90) = 33632$ psi M.S. (yield)= 1.5(33632)/[1.0(28872)] -1	**M.S. (yield) =0.75** **Net Section at c, Lug**

Copyright 2017 Lockheed Martin Corporation.
Note: The current version is always the version on the Lockheed Martin network.

5.5 Tension Joint Fastener Preload

As discussed in Section 5.2.3.1.3, proper torque and preload of a fastener can both improve its static load capability and improve its life. This section will discuss how to calculate the preload induced in a fastener by a given torque as well as how to calculate the total bolt tension load for use in analysis. It also includes a section on calculating the appropriate torque for a given fastener and external loading. The discussion here is limited to joints without gaskets. See References 5-25 and 5-26 for discussions on how these calculations differ if gaskets are present. Figure 5.5.0-1 provides an overview of the process for determining the preload from an applied torque, which is detailed in Section 5.5.1. Figure 5.5.0-2 reverses the process, starting with a desired preload and applied load and determines the required torque. This process is detailed in section 5.5.3.

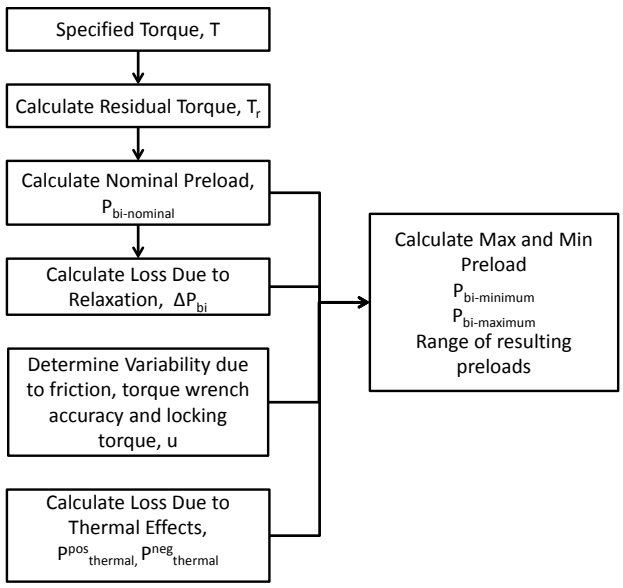

Figure 5.5.0-1 Overview of Process to Determine Preload when Applied Torque is Known

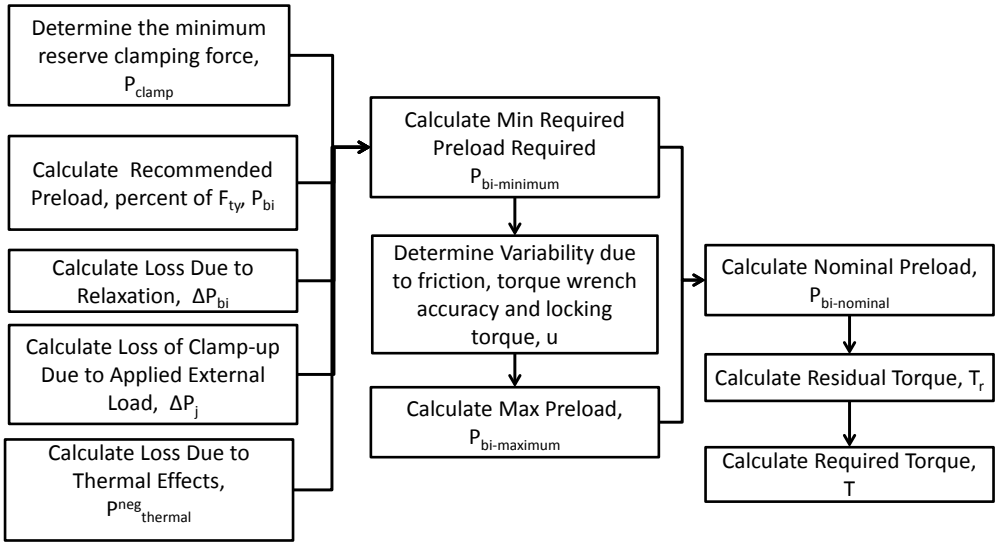

Figure 5.5.0-2 Overview of Process to Determine Required Torque

Copyright 2017 Lockheed Martin Corporation.
Note: The current version is always the version on the Lockheed Martin network.

5.5.1 The Relationship between Torque and Preload

The torque as called out in the fastener installation specification or on the drawing includes the torque to overcome the self-locking feature (if any) on the nut. The locking torque for the nut can be obtained from the nut specification. Many aerospace applications use Mil-N-25027G type self-locking nuts. This specification provides the minimum breakaway torque and maximum locking torque. The average of these values would be the nominal torque for non-lubricated nuts. Testing performed under Reference 5-28 indicates the nominal locking torque for lubricated nuts is about half of that for non-lubricated nuts, thus a relationship which defines the nominal locking torque with a variability of +/-80% for lubricated and non-lubricated nuts is given by **Equation 5.5.3-9**.The residual torque is the difference between the torque specified on the drawing and the nominal locking torque given by

$$T_r = T - T_{nom\text{-}lock} \qquad \textbf{Equation 5.5.1-1}$$

where
T is the drawing or specification torque (in-lbs)
$T_{nom\text{-}lock}$ is the nominal locking torque from the nut specification or **Equation 5.5.3-9**. (in-lbs)

The residual torque preloads the fastener in tension. The relationship between the residual torque and the resulting preload is a function of the slope of the threads, thread friction and washer friction which are taken into account in the equation below. It is also a function of the accuracy of the torque wrench and the variation in the coefficient of friction which are not accounted for. As a result *the preload predicted from this equation is within about ±26% for lubricated threads* and *±37% for non-lubricated threads.* For a derivation of this equation refer to Reference 5-25.

$$P_{bi\text{-}nominal} = T_r / [1/(2\pi N) + 0.5\mu_{nut}D_{pitch}/\cos(\alpha) + \mu_{surf}D_{eff}/2] \qquad \textbf{Equation 5.5.1-2}$$

where
T_r is the nominal residual torque (in-lbs)
$P_{bi\text{-}nominal}$ is the nominal bolt preload (lbs)
N is the number of threads per inch
D_{pitch} is the nominal pitch diameter from the fastener thread specification. For Mil-S-8879 fastener threads see Table 5.5.1-1.(in)
α is the fastener thread half angle[1] (deg)
μ_{nut},μ_{surf} are the appropriate coefficients of friction. Some typical values are given in Table 5.5.1-2.
D_{eff} is the effective diameter for nut to washer friction. It is assumed to be the average of the hole diameter and the washer diameter. [2](in)

Equation 5.5.1-2 is of the same form as Equation 5.2.3-1 where K_{nut} replaces the denominator. To calculate K_{nut} for different fastener types or coefficients of friction the denominator of Equation 5.5.1-2 may be used.

Most tension fasteners in aerospace applications have Mil-S-8879 rolled threads[3]. This can be determined from the fastener specification. The remainder of this discussion assumes the fastener system being used has this type of thread. If, for a particular application, this is not the case, the analyst needs to research the threads and use the values appropriate for that system. **Table 5.5.1-1** gives the pitch diameter and root area for standard Mil-S-8879 UNJF fasteners.

[1] For MIL-S-8879 threads, α = 30 degrees. For other fastener threads, see fastener thread specification.
[2] If no separate washer is used, then a good approximation is D_w=1.5D_{bolt}, thus D_{eff}=(D_{bolt}+1.5D_{bolt})/2
[3] For example, MS21250 180 ksi Steel tension Bolts, NASM14181Nickel Alloy 718 220 ksi tension bolts

Copyright 2017 Lockheed Martin Corporation.
Note: The current version is always the version on the Lockheed Martin network.

Table 5.5.1-1 Mil-S-8879 Fastener Thread Dimensions – External Threads, Fine Series

Fastener Callout	Number of Threads per inch	Nominal Pitch Diameter[4] (D_{pitch})	Root Area (A_{thd}) based on Max Root Diameter	Minor (Maximum Root) Diameter[5]
0.1640-32 UNJF-3A	32	0.1426	0.012848	0.127900
0.1900-32 UNJF-3A	32	0.1686	0.018602	0.153899
0.2500-28 UNJF-3A	28	0.2256	0.034241	0.208799
0.3125-24 UNJF-3A	24	0.2841	0.054905	0.264400
0.3750-24 UNJF-3A	24	0.3465	0.083879	0.326800
0.4375-20 UNJF-3A	20	0.4035	0.113232	0.379699
0.5000-20 UNJF-3A	20	0.4659	0.153577	0.442199
0.5625-18 UNJF-3A	18	0.5247	0.195017	0.498300
0.6250-18 UNJF-3A	18	0.5872	0.247005	0.560800
0.7500-16 UNJF-3A	16	0.7075	0.360822	0.677800
0.8750-14 UNJF-3A	14	0.8266	0.493274	0.792500
1.0000-12 UNJF-3A	12	0.9437	0.641556	0.903800
1.1250-12 UNJF-3A	12	1.0687	0.831289	1.028800
1.2500-12 UNJF-3A	12	1.1936	1.045565	1.153800
1.3750-12 UNJF-3A	12	1.3186	1.284385	1.278800
1.5000-12 UNJF-3A	12	1.4435	1.547748	1.403800

Table 5.5.1-2 presents some typical coefficients of friction for use in the above calculations.

Table 5.5.1-2 Typical Coefficients of Friction

Surface or Lubricant	Coefficient of Friction, μ
Mil-T-5544 or Mil-G-21164 Lubricant (Graphite in Petrolatum or Oil)	0.05-0.07
Dry film (Molybdenum)	0.06-0.11
Cleaned dry nut on steel plate	0.22
Cleaned dry nut on aluminum plate	0.17

From **Equation 5.5.1-2**, if the torque per the bolt installation specification or drawing callout is known, the nominal preload, P_{bi}, can be calculated. This nominal preload does not account for any of the uncertainties or relaxation of the fasteners during torquing or during use. To account for these, minimum and maximum preloads are established. The strength of the bolt is then checked using the maximum preload in conjunction with applied loading and the joint is checked for opening or gapping using the minimum values along with joint stiffness.

The loss in preload due to joint relaxation is calculated based on a historically derived factor of 8% for embedment and an additional 20% for stress relaxation for bolts in service up to 250 degrees. Bolts subject to long exposure beyond 250 degrees will lose more of their preload over time. Thus

$$\Delta P_{bi} = (0.08+0.20)P_{bi} \qquad \textbf{Equation 5.5.1-3}$$

where

P_{bi} is the nominal bolt preload (lbs)

[4] The pitch diameter is the average of the major and minor diameters where the major diameter is the diameter of an imaginary cylinder which bounds the crests of the threads.

[5] The minor (or root) diameter is the diameter of the cylinder of the fastener if all the threads were removed.

Copyright 2017 Lockheed Martin Corporation.
Note: The current version is always the version on the Lockheed Martin network.

The maximum preload can be calculated based on the minimum preload and the uncertainties caused by friction, assembly tools and processes and variations in locking torque. For a joint using lubricated threads installed with a calibrated torque wrench, the torque loss due to friction is on the order of +/-20 percent. For a similar joint with non-lubricated threads, the variation is +/-30%. The accuracy of a calibrated torque wrench is within +/-15%. If the nut has a self-locking feature, its locking torque can vary +/-80% from nominal which results in a 3-9% variation in bolt preload[6]for lubricated threads and 5-16% for non-lubricated threads. It would be conservative to assume that all uncertainties are adverse simultaneously, so a least squares approach will be taken. The variability factor can, thus, be defined as

$$u = (0.20^2+0.15^2+0.09^2)^{1/2} = 0.26 \text{ (lubricated)} \qquad \textbf{Equation 5.5.1-4}$$
$$u = (0.30^2+0.15^2+0.16^2)^{1/2} = 0.37 \text{ (non-lubricated)}$$

If a joint experiences thermal cycling, the amount of preload present in the bolt can vary with temperature. As the plates making up the layers of the joints heat up, they expand. The bolt also will expand, but depending on the relative coefficients of thermal expansion of the layers and the bolt, one might expand faster than the other. If the layers expand faster, they put additional tension on the bolt. If the bolt expands faster, the preload on the layers might be reduced. This phenomenon also occurs as a joint is cooled below the assembly temperature. The change in preload due to thermal effects is given by

$$P_{thermal} = (T_{op}-T_{instl})[(\alpha_{j1}t_{j1}+\alpha_{j2}t_{j2}+\alpha_{ji}t_{ji}) - \alpha_b L_{shank}](\varphi_n k_j) \qquad \textbf{Equation 5.5.1-5}$$

Where
T_{op} is the steady state operating temperature (degrees F)
T_{instl} is the ambient installation temperature (degrees F)
α_j, α_b are the coefficients of thermal expansion for the joint layers and the bolt, respectively (in/in/°F)
t_j is the layer thickness (in)
φ_n is the load factor ratio defined by **Equation 5.5.2-3**
k_j is the joint stiffness parameter given by **Equation 5.5.2-4**
L_{shank} is the shank length of the fastener (in)

Unlike the stress relaxation term in **Equation 5.5.1-3**, the change in preload due to thermal cycling will vary as the bolt heats and cools. It is important that the analyst use a steady state operating temperature, commensurate with the maximum loading rather than a transient temperature that the structure may not have time to respond to. Although the coefficients of thermal expansion will vary for many materials for different temperatures, it is of sufficient accuracy for the purposes of this calculation to use an average value over the temperature range typical of most aircraft applications (-65° to 250°F). Exceptions might occur for structure in or near the engines/engine exhaust or other cases where the aircraft might experience temperature extremes. The above equation is formulated such that a negative value, $P^{neg}_{thermal}$, indicates a loss in joint preload and a positive value, $P^{pos}_{thermal}$, indicates an increase in preload and, thus bolt load.

The minimum preload remaining in the joint can be calculated from

$$P_{bi\text{-}minimum} = (1-u)P_{bi\text{-}nominal} - \Delta P_{bi} + P^{neg}_{thermal} \qquad \textbf{Equation 5.5.1-6}$$

Where
u is the variability factor given by **Equation 5.5.1-4**
ΔP_{bi} is the change in preload due to embedment and stress relaxation (lbs)
$P^{neg}_{thermal}$ is the negative change in preload due to thermal cycling (lbs)

[6] Calculated based on a total bolt preload equivalent to 90% of F_{ty} for all diameters. See **Equation 5.5.3-9**.

Copyright 2017 Lockheed Martin Corporation.
Note: The current version is always the version on the Lockheed Martin network.

Similarly, the maximum preload the joint can experience can be calculated from

$$P_{bi\text{-}maximum} = (1+u)P_{bi\text{-}nominal} + P^{pos}_{thermal} \qquad \textbf{Equation 5.5.1-7}$$

where
u is the variability factor given by **Equation 5.5.1-4**
$P^{pos}_{thermal}$ is the positive change in preload due to thermal cycling (lbs).

5.5.2 Calculating Bolt Tension Load

Once the preload is determined, it is shared between the bolt and the joint layers. The preload that remains in the fastener offsets the cyclic excursions of the applied load and improves the bolt fatigue characteristics. The opening load or the load at which the joint separates is a function of the preload remaining in the joint layers. The overall process is illustrated in Figure 5.5.2-1 and the details described in this section.

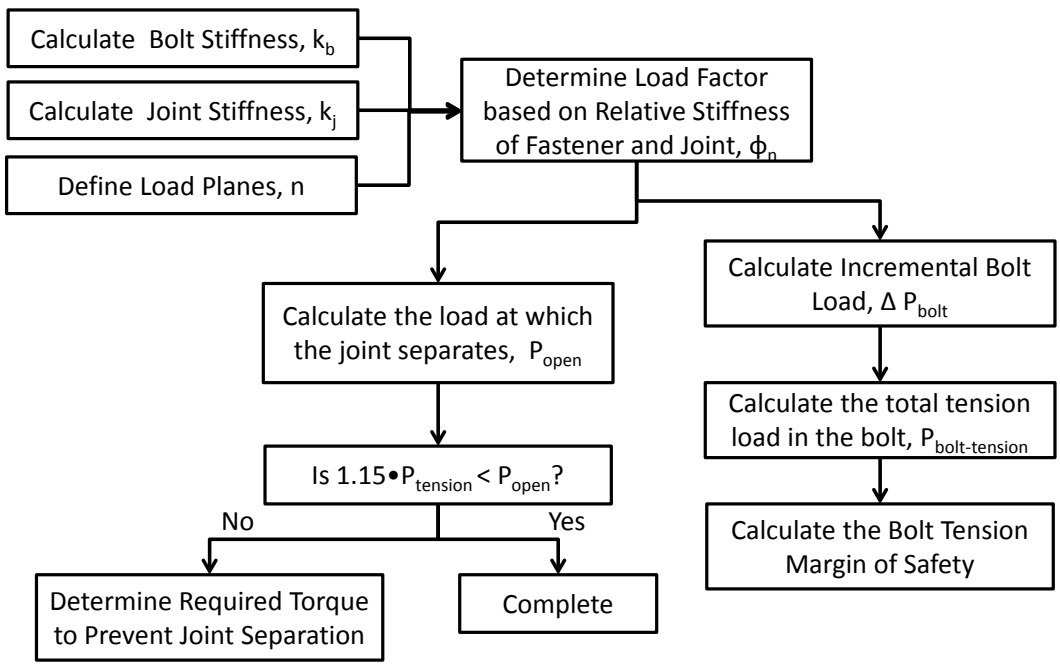

Figure 5.5.2-1 Overview of Process to Determine Fastener Tension Load and Joint Separation Load

The load in the bolt and the opening load is a function of the stiffness of the joint relative to the fastener stiffness. The load factor, φ, is the ratio between the increase in bolt tension and the external load on the bolt which caused the increase. It is given by

$$\varphi = k_b/(k_b+k_j) \qquad \textbf{Equation 5.5.2-1}$$

where
k_b is the stiffness of the bolt given by **Equation 5.5.2-4**.(lb/in)
k_j is the stiffness of the joint given by **Equation 5.5.2-5**. (lb/in)

Equation 5.5.2-1 describes the behavior of a joint where the tension load is applied at the head of the fastener and the base of the nut. In most applications, the load is actually applied somewhere within the layers of the joint. The exact location is generally not known, so a hypothetical loading plane has been defined, located somewhere between the outer and contact surfaces as shown in **Figure 5.5.2-2**.

Copyright 2017 Lockheed Martin Corporation.
Note: The current version is always the version on the Lockheed Martin network.

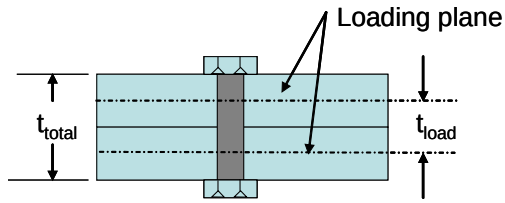

Figure 5.5.2-2 Loading Plane Illustration

The loading plane factor is given by

$$n = t_{load}/t_{total} \qquad \textbf{Equation 5.5.2-2}$$

where
t_{load} is the distance between the load planes of all layers (in)
t_{total} is the total stackup of the joint (in)

In most cases the assumed loading planes are located at the centerlines of the mating parts, thus n would be equal to 0.5. If the loading were to occur at the mating surfaces, n would be 0.0 and, as discussed before, if the bolt head and nut were loaded, n would be 1.0. In most aerospace applications, a value of 0.5 is reasonably assumed. The value should be adjusted, as necessary to fit the specific application being analyzed. The load factor is then modified to include the effects of the loading plane as follows

$$\varphi_n = n\varphi \qquad \textbf{Equation 5.5.2-3}$$

where
φ is given by **Equation 5.5.2-1**
n is given by **Equation 5.5.2-2**

To calculate the bolt stiffness, the bolt is treated as a set of springs in series where the spring rate of the first spring is based on the shank of the fastener and ½ of the head thickness and the spring rate of the second is based on the spring rate of the engaged part of the threaded portion which is assumed to be half the thickness of the nut and is given by

$$1/k_b = L_{se}/AE + (H_{nut}/2)/A_{thd}E$$
$$L_{se} = \Sigma t_i + H_{head}/2$$
$$k_b = 1/[\, L_{se}/AE + (H_{nut}/2)/A_{thd}E] \qquad \textbf{Equation 5.5.2-4}$$

where
A is the area of the shank of the bolt (in^2)
A_{thd} is the root area at the threads of the bolt (in^2)
t_i is the thickness of each layer in the stack-up. (in).
H_{head}, H_{nut} are the height of the head and nut of the fastener, respectively (in)
E is the modulus of elasticity of the fastener (psi).

The joint stiffness is a function of the plates being joined. These are also treated as series springs in compression. An all-aluminum joint will be more flexible than a steel joint of similar geometry. The joint stiffness is calculated from

$$1/k_j = t_1/E_1A_c + t_2/E_2A_c + \ldots + t_i/E_iA_c$$
$$k_j = 1 / [t_1/E_1A_{c1} + t_2/E_2A_{c2} + \ldots + t_i/E_iA_{ci}] \qquad \textbf{Equation 5.5.2-5}$$
$$A_{ci} = (\pi/4)[((D_{head}+D_{nut})/2)^2 - D^2]$$

where
E_1, E_2, E_i is the modulus of elasticity of each plate in the stack-up (psi)
t_1,t_2, t_i is the thickness of each layer in the joint (in)
D_{head}, D_{nut} are the diameter of the bolt head and nut, across the flats, respectively (in)
D is the diameter of the bolt hole (in)
A_c represents the equivalent cylindrical diameter of the plate being compressed by the fastener.

Copyright 2017 Lockheed Martin Corporation.
Note: The current version is always the version on the Lockheed Martin network.

This method for calculating the joint stiffness is recommended as it is conservative for the fastener however, in specific circumstances other formulations may yield better results. References 5-12 and 5-26 provide alternate formulations.

The incremental loading in the preloaded bolt, ΔP_{bolt}, shown in **Figure 5.5.2-3**, due to an externally applied load can be calculated from

$$\Delta P_{bolt} = \varphi_n(P_{tension} + P_{t\text{-}moment}) \qquad \textbf{Equation 5.5.2-6}$$

where
$P_{tension}$ is the external tension load on the bolt
$P_{t\text{-}moment}$ is the tension prying load due to fastener bending from Equation 5.2.3-41 (lbs)
φ_n is the load factor calculated in **Equation 5.5.2-3**

Prior to opening, the total load in the bolt is the total of the applied preload and the incremental applied load. From **Figure 5.5.2-3**, it can be seen that when P_{open} is equal to the sum of the externally applied tension load and the induced tension load due to bending, the joint is on the verge of opening. Beyond that point, the load in the bolt is directly equal to the externally applied tension load.

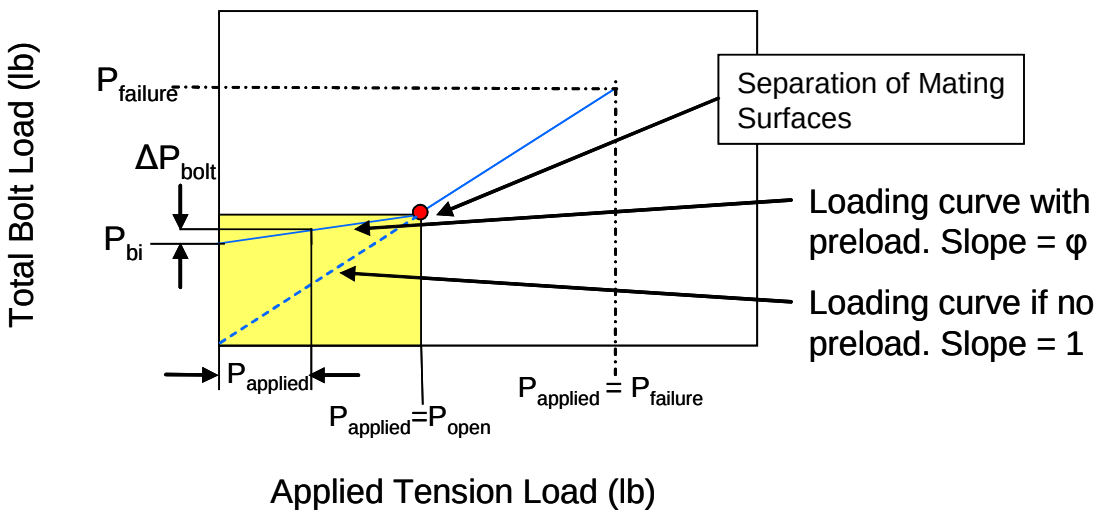

Figure 5.5.2-3 Bolt Loading Curve for Bolt with Preload

The total load the bolt must withstand, the bolt tension load, is based on the maximum preload and is expressed as

$$P_{bolt\text{-}tension} = P_{bi\text{-}maximum} + \Delta P_{bolt} \text{ for } [P_{tension}+P_{t\text{-}moment}] < P_{open} \qquad \textbf{Equation 5.5.2-7}$$

$$P_{bolt\text{-}tension} = [P_{tension}+P_{t\text{-}moment}] \text{ for } [P_{tension}+P_{t\text{-}moment}] \geq P_{open} \qquad \textbf{Equation 5.5.2-8}$$

Where
$P_{bi\text{-}maximum}$ is the maximum preload in the bolt calculated from **Equation 5.5.1-7**(lbs)
ΔP_{bolt} is the incremental bolt load due to externally applied tension load from **Equation 5.5.2-6**.
$P_{tension}$ is the externally applied tension load. (lbs)
$P_{t\text{-}moment}$ is the tension load in the bolt due to a bolt bending moment per Section 5.2.3.4. (lbs)
P_{open} is the joint opening load given by **Equation 5.5.2-9**.

Tension margins of safety for the bolt should be written against $P_{bolt\text{-}tension}$ of **Equation 5.5.2-7** or **Equation 5.5.2-8** as applicable.

If a limit yield check or fatigue analysis is performed, the analyst should keep in mind that the preload does not have a limit or ultimate component while the externally applied tension load does. Thus, ΔP_{bolt} would be divided by the safety factor but P_{bi} would not.

Copyright 2017 Lockheed Martin Corporation.
Note: The current version is always the version on the Lockheed Martin network.

It is desirable that the joint surfaces stay in contact, even under the minimum opening load, $P_{tension} < P_{open\text{-}min}$, where $P_{tension}$ is the externally applied tension load and the range of opening loads can be calculated from

$$P_{open\text{-}min} = P_{bi\text{-}minimum}/(1-\varphi_n) \qquad \textbf{Equation 5.5.2-9}$$
$$P_{open\text{-}max} = P_{bi\text{-}maximum}/(1-\varphi_n)$$

where
$P_{bi\text{-}minimum}$, $P_{bi\text{-}maximum}$ are the minimum and maximum preload in the bolt calculated from **Equation 5.5.1-6** and **Equation 5.5.1-7**, respectively. (lbs)
φ_n is the load factor calculated in **Equation 5.5.2-3**

It is recommended that, as a minimum, the separation of mating parts be checked at 115% of Design Limit load or 115% of maximum spectrum load whichever is larger using the minimum opening load. For critical single load path tension joints, where failure may cause loss of aircraft or life, a minimum opening load approaching design ultimate load might be warranted.

5.5.3 Calculating Required Torque

Assuming the bolt torque used above results in a maximum preload less than 90% of F_{ty} [7] and the torque specified does not prevent the joint from opening, the analyst has the option to increase the bolt torque. The necessary minimum bolt preload is based on a minimum reserve clamping force plus the loss in clamp-up due to joint relaxation plus the loss of clamp-up due to external loading plus the loss in clamp up due to thermal loading.

The minimum reserve clamping force, P_{clamp}, is the minimum preload to prevent joint slip, separation or leakage of a concentrically loaded joint. It can be thought of as the preload remaining in the bolt after the loss of preload due to joint relaxation and external loading.

If the joint is a shear joint then, as a minimum, this force should be equal to the shear force multiplied by the surface coefficient of friction. If the joint is a tension joint, this number should be as large as possible, but as a minimum, it should be 1% of the fastener yield load.

$$P_{clamp} \geq P_{bolt\text{-}ultimate} \times \mu_{surface} \text{ (Shear Joint)} \qquad \textbf{Equation 5.5.3-1}$$
$$P_{clamp} \geq 0.01 F_{ty} A_{thd} \text{ (Tension Joint)}$$

where
$\mu_{surface}$ is the surface coefficient of friction
$P_{bolt\text{-}ultimate}$ is the ultimate applied shear load (lbs)
F_{ty} is the allowable yield tensile stress obtained from Reference 5-4 (psi)
A_{thd} is the root area of the bolt, defined in Table 5.5.1-1 for Mil-S-8879 threads. (in^2)

The loss in preload due to joint relaxation was discussed in Section 5.5.1 and is given by **Equation 5.5.1-3**. Since the loss in preload is a function of how much preload is in the joint to start with, at this point an estimate should be made of P_{bi}. It can later be adjusted and everything recomputed, however a good starting point would be 50-80% of fastener F_{ty} for nominal preload. This is expressed as

$$P_{bi} = K_{pct} F_{ty} A_{thd} \qquad \textbf{Equation 5.5.3-2}$$

where
P_{bi} is the nominal bolt preload (lbs)
K_{pct} is the fraction of F_{ty} to which the bolt will be pre-stressed. Usually 0.50 – 0.80.
A_{thd} is the root area of the bolt, defined in **Table 5.5.1-1** for Mil-S-8879 threads. (in^2)

[7] Reference discussion in Section 5.2.3.1.3.

Copyright 2017 Lockheed Martin Corporation.
Note: The current version is always the version on the Lockheed Martin network.

The loss in clamp-up due to the applied external load is the amount of relaxation in compression on the surfaces of the joint as the bolt stretches under load. Similar to the tension load the bolt actually sees in a preloaded joint (**Equation 5.5.2-6**), it is a function of the load factor, φ. This is given by

$$\Delta P_j = (1-\varphi_n)(P_{tension} + P_{t\text{-}moment}) \qquad \textbf{Equation 5.5.3-3}$$

where
φ_n is the joint load factor given by **Equation 5.5.2-3**.
$P_{tension}$ is the externally applied bolt tension load (lbs)
$P_{t\text{-}moment}$ is the tension prying load due to fastener bending (lbs)

If the bolt is not subject to bending loads in the previous calculation, then $P_{t\text{-}moment}$ would be zero. The final loss to be included in the calculation of the minimum required preload is the loss due to thermal loading given by **Equation 5.5.1-5**. The required minimum preload for a fastener subjected to an externally applied tension load, can now be calculated from

$$P_{bi\text{-}minimum\text{-}required} = P_{clamp} + \Delta P_{bi} + \Delta P_j + |P^{neg}_{thermal}| \qquad \textbf{Equation 5.5.3-4}$$

where
P_{clamp} is the minimum reserve clamping force required to keep the joint closed under shear or direct axial tension loading (lbs)
ΔP_{bi} is the loss in preload due to joint relaxation from**Equation 5.5.1-3**.
ΔP_j is the loss in preload due to the externally applied tension load from **Equation 5.5.3-3**
$P^{neg}_{thermal}$ is the loss due to thermal loading given by **Equation 5.5.1-5**.

Since this effort defines the process for determining the appropriate preload for a fastener, the minimum required preload in this calculation includes the loss due to embedment and thermal loading and the external joint load. This is different than the minimum preload defined in **Equation 5.5.1-6** which represents the preload remaining after the loss has occurred which is used to determine whether or not the joint opens under loading.

The maximum preload can be calculated based on the minimum preload and the uncertainties caused by friction, assembly tools and processes, and variations in locking torque. The uncertainty factor, u, was developed in Section 5.5.1 and is given in **Equation 5.5.1-4**. The ratio of the maximum to minimum preload due to these variabilities is given by

$$\alpha_v = (1+u)/(1-u) \qquad \textbf{Equation 5.5.3-5}$$

$$\alpha_v = (1+0.26)/(1-0.26)=1.70 \text{ (lubricated)}$$

$$\alpha_v = (1+0.37)/(1-0.37)= 2.17 \text{ (non-lubricated)}$$

where
u is the uncertainty due to friction and assembly processes given by **Equation 5.5.1-4**.

The maximum resulting preload, due to the minimum required preload and the uncertainties described above can then be calculated from

$$P_{bi\text{-}maximum\text{-}required} = \alpha_v P_{bi\text{-}minimum} \qquad \textbf{Equation 5.5.3-6}$$

where
$P_{bi\text{-}minimum}$ is the minimum preload from **Equation 5.5.3-4**. (lbs)
α_v is the ratio of the maximum to minimum preload due to the uncertainties from **Equation 5.5.3-5**.

The analyst should recall the values given for uncertainties are typical. If, for a particular application, a better estimate of these uncertainties can be obtained, the improved values should be used. The nominal required preload can now be calculated from the average of the maximum and minimum required preloads.

$$P_{bi\text{-}nom} = (P_{bi\text{-}minimum\text{-}required} + P_{bi\text{-}maximum\text{-}required})/2 \qquad \textbf{Equation 5.5.3-7}$$

where
$P_{bi\text{-}minimum\text{-}required}$, $P_{bi\text{-}maximum\text{-}required}$ is the required minimum and maximum bolt preload from **Equation 5.5.3-4** and **Equation 5.5.3-6**, respectively.(lbs)
This value of nominal preload should be compared to the value calculated from **Equation 5.5.3-2**. If the value obtained from **Equation 5.5.3-7** exceeds the value obtained from **Equation 5.5.3-2**, then the assumed preload level,

Copyright 2017 Lockheed Martin Corporation.
Note: The current version is always the version on the Lockheed Martin network.

as a fraction of F_{ty}, is insufficient and should be increased; however do not exceed 90% of F_{ty}[8]. If the required preload, as a fraction of F_{ty} exceeds 90%, increase the bolt diameter or decrease the applied loading.

Conversely, if the value obtained from **Equation 5.5.3-7** is less than the value obtained from **Equation 5.5.3-2**, the assumed preload level, as a fraction of F_{ty}, is adequate and may be used.

Once the nominal preload is determined, the maximum and minimum preloads can be established from **Equation 5.5.1-6** and **Equation 5.5.1-7**. Then Section 5.5.2 may be used to calculate the bolt tension loads.

To calculate the torque required to achieve the appropriate preload, **Equation 5.5.1-2** can be rearranged to give

$$T_r = P_{bi\text{-}nominal}\,[1/(2\pi N) + 0.5\mu_{nut}D_{pitch}/\cos(\alpha) + \mu_{surf}D_{eff}/2] \qquad \textbf{Equation 5.5.3-8}$$

$$P_{bi\text{-}nominal} = (P_{bi\text{-}minimum} + P_{bi\text{-}maximum})/2$$

where

$P_{bi\text{-}minimum}$, $P_{bi\text{-}maximum}$ is the minimum and maximum bolt preload from **Equation 5.5.1-6** and **Equation 5.5.1-7**, respectively or Equations 5.5.3-4 and 5.5.3-6, respectively(lbs)

N is the number of threads per inch

D_{pitch} is the nominal pitch diameter from the fastener thread specification. For Mil-S-8879 fastener threads see Table 5.5.1-1.(in)

α is the fastener thread half angle[9] (deg)

μ_{nut},μ_{surf} is the coefficient of friction of the threads and the nut to plate, respectively, given in Table 5.5.1-2.

D_{eff} is the effective diameter for nut to washer friction. It is assume to be the average of the hole diameter and the washer diameter. [10](in)

Note that the portion of Equation 5.5.3-8 in brackets is called the wrench or nut factor, K_{nut}, and is provided in Table 5.2.3-3 for various nut/joint/lubricant combinations.

The torque as called out in the fastener installation specification or on the drawing includes the torque to overcome the self-locking feature (if any) on the nut. The locking torque for the nut can be obtained from the nut specification. Many aerospace applications use Mil-N-25027G type self-locking nuts. This specification provides the minimum breakaway torque and maximum locking torque. The average of these values would be the nominal torque for non-lubricated nuts.

Testing performed under Reference 5-28 indicates the nominal locking torque for lubricated nuts is about half of that for non-lubricated nuts, thus a relationship which defines the nominal locking torque with a variability of +/-80% for lubricated and non-lubricated nuts is given by

$$T_{nom\text{-}lock} = 450D_{bolt}^{2.33} \text{ non-lubricated} \qquad \textbf{Equation 5.5.3-9}$$

$$T_{nom\text{-}lock} = 225D_{bolt}^{2.33} \text{ lubricated}$$

where

D_{bolt} is the nominal bolt diameter (in)

---

[8] See Section 5.2.3.1.3 for discussion of this limit on preload.

[9] For MIL-S-8879 threads, α = 30 degrees. For other fastener threads, see fastener thread specification.

[10] If no separate washer is used, then a good approximation is D_w=1.5D_{bolt}, thus D_{eff}=(D_{bolt}+1.5D_{bolt})/2

Copyright 2017 Lockheed Martin Corporation.
Note: The current version is always the version on the Lockheed Martin network.

The total applied nominal torque can be calculated by combining the residual torque of **Equation 5.5.3-8** with the nominal breakaway torque given by **Equation 5.5.3-9**. This is expressed as

$$T = T_r + T_{lock}$$ **Equation 5.5.3-10**

where
T is the total applied torque (lbs)
T_r is the nominal residual torque which is necessary to preload the fastener. (lbs)
T_{lock} is the nominal locking torque for the nut. (lb)

All of the variabilities in friction, nut locking torques and torque wrench inaccuracies have been accounted for and this nominal torque could be specified on the face of the drawing with an allowable tolerance of +/-15%. The drawing should also specify if there is lubrication or no lubrication.

5.6 Bonded Joints

Please refer to Reference 5-5, PM4056, Section 12 for bonded joint analysis techniques.

5.7 Welded Joints

Refer to Program-specific and customer-generated guidance and/or the LM Stress Memo Manual SM129a , Reference 5-1and the GD Structural Analysis Manual, Section 14.8, Reference 5-2.

5.8 Brazed Joints

Refer to Program-specific and customer-generated guidance and/or the LM Stress Memo Manual SM72c , Reference 5-1.

5.9 Friction Joints

Friction joints are a special subcategory of joint which allow for the transfer of in-plane shear load through the intentional use of friction. There are definite disadvantages to the use of friction joints: e.g., tension fasteners are required, the shear strength of the joint is a function of the initial tension in the bolt (the control of which is mandatory), the durability and stress corrosion characteristics are a source of concern, and the joint, especially the serrated type, is expensive. Their use should be limited because the rigidity of such joints can be reduced due to relaxation of the tension fasteners.

The only legitimate reason for the use of such joints is to facilitate production by allowing oversize or slotted holes and still maintaining a close tolerance connection for the transfer of shear loads. These types of joints are sometimes used on structure which requires both adjustment and rigging such as canopy hinge fittings.

There are two types of friction joints: smooth and rough. Both will be discussed in this section.

5.9.1 Smooth Friction Joints

A smooth friction joint may be defined as any joint wherein loads are transferred from one component to another between smooth faying surfaces of the joint. Smooth friction joints are difficult to design because the response of the joint is a function of the coefficient of friction of the mating surfaces and the amount of clamping force resulting from the torque of the fasteners. Although theoretical values are available for the coefficient of friction they can vary widely and specific testing for a given geometry, bolt pattern and torque is required. Even then, there is significant scatter in the data.

There are two types of smooth joints: dry and wet. The guidelines for each type are delineated in the next few paragraphs.

Copyright 2017 Lockheed Martin Corporation.
Note: The current version is always the version on the Lockheed Martin network.

Dry smooth joints are joints where the surfaces being joined are bare or finished metal with no faying surface or other types of sealant present. This type joint is corrosion prone and fretting fatigue critical and is usually eliminated from consideration by the aircraft specifications. Smooth “dry” friction joints shall not be used in any applications.

The wet smooth type of joint has fuel tank sealant or rubber in the faying surfaces and can be used to attach secondary structure to primary structure. In this case, overlapping assumptions for load distribution are often assumed.

- Smooth wet friction joints shall not be used in Class IA structure. They also shall not be used in any Class IB structure where the joint requires disassembly in service.
- Smooth wet friction joints, where tank sealant or rubber is used in the faying surface, can be used to attach Class II structure to Class IB structure; a close tolerance hole should be maintained in the Class IB structure and a loose hole or slot is in the Class II structure. This type of joint is used primarily to transmit loads normal to the surface, e.g. pressure loads and to limit in-plane load transfer from Class IB structure to Class II structure.

The failure criterion for friction joints, i.e. M.S.=0, is generally related to the amount of slippage and they are usually designed for no slippage under load.

5.9.2 Rough Friction Joints

Rough friction joints employ surface features on the mating surfaces or the face of the washer to improve the clamping characteristics of the joint and to eliminate slippage. There are two types of rough friction joint: knurled[11] and serrated. Knurling is approved only as used in swaged control rods. Knurled joints, as shown in Figure 5.9.2-1, shall not be used.

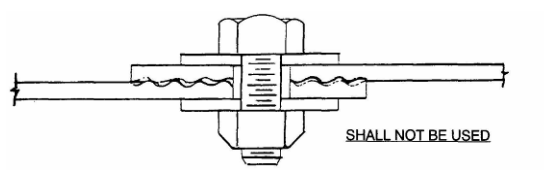

Figure 5.9.2-1 Joint with Knurled Mating Surfaces

Serrations come in two types: non–mating and mating. Non–mating serrations, as shown in Figure 5.9.2-2, where one surface is serrated and is mated with a smooth surface shall not be used.

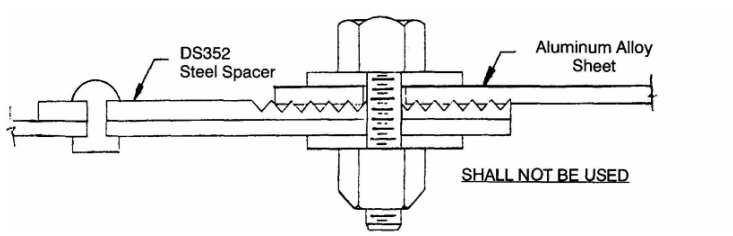

Figure 5.9.2-2 Joint with Non-Mating Serrations

[11] Knurling is a diamond shaped pattern that is cut or rolled into the surface of a metal part.

Copyright 2017 Lockheed Martin Corporation.
Note: The current version is always the version on the Lockheed Martin network.

Spiral grooved washers (LS1551 and LS8871) as shown in Figure 5.9.2-3, shall not be used. This type has been used in the past and, even when installed wet with sealant to prevent corrosion, preload could not be maintained due to creeping of the teeth into the base material.

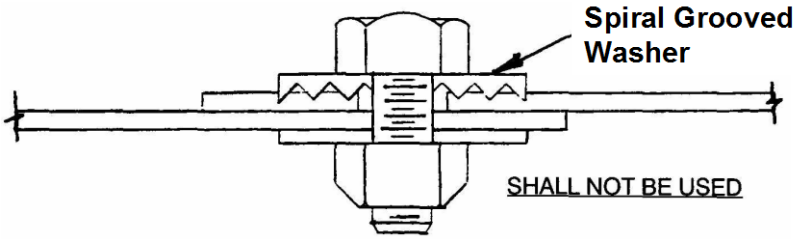

Figure 5.9.2-3 Joint with Spiral Grooved Washer

Assembled joints with non-mating serrations and spiral groove washers can result in durability and corrosion issues within the joint as the serrated side gouges the smooth side, removes protective finishes and causes damage to the materials surface.

Mating serrations, as shown in Figure 5.9.2-4, may be used in Class IB or Class II structure with the approval of the Program Stress Manager. Mating serrated joints as shown in Figure 5.9.2-4 shall not be used in Class IA structure.

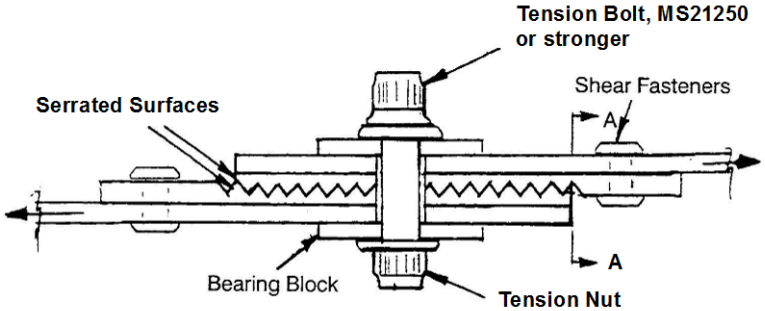

Figure 5.9.2-4 Joint with Mating Serrations

The following is a list of design considerations which have been developed based on testing at Lockheed. It is recommended that variations from this approach be subject to component level testing to ensure the joint performs as designed. Figure 5.9.2-5 shows serration geometry.

- The mating serrated blocks are recommended to be 17–4PH steel or an equivalent strength material.
- All faying surfaces shall be assembled “wet” with sealant; however no sealant is allowed in the serrations.
- The tension bolts, MS21250 bolts or stronger, shall be assembled wet with sealant. These bolts shall have a minimum tension preload of twice the shear load transferred but less than 90%$F_{ty\text{-}bolt}$. In the event that both requirements cannot be satisfied, a stronger bolt shall be used.
- In order to avoid disturbing the cured sealant, bolt torque shall not be checked or changed after installation without complete disassembly and cleaning.
- Bolts should be torque-striped.
- Bolt spacing should be no less than 4D and no greater than 6D. If the bolts are at more than 6D spacing, a 0.67 reduction factor shall be applied to the joint allowable load.
- A minimum of 2 bolts is required and 4 bolts are strongly recommended. If only 2 bolts are used, a 0.67 reduction factor shall be applied to the joint allowable load.
- Serrations shall be at an angle of ninety degrees with the principal axis of loading.

Copyright 2017 Lockheed Martin Corporation.
Note: The current version is always the version on the Lockheed Martin network.

- The hole in the sheet upon which the serration block bears may be drilled approximately 0.10 inch oversize, or slotted **normal** to the serrations.
- Elaborate designs featuring multiple sets of serrations at different angles shall be tested.

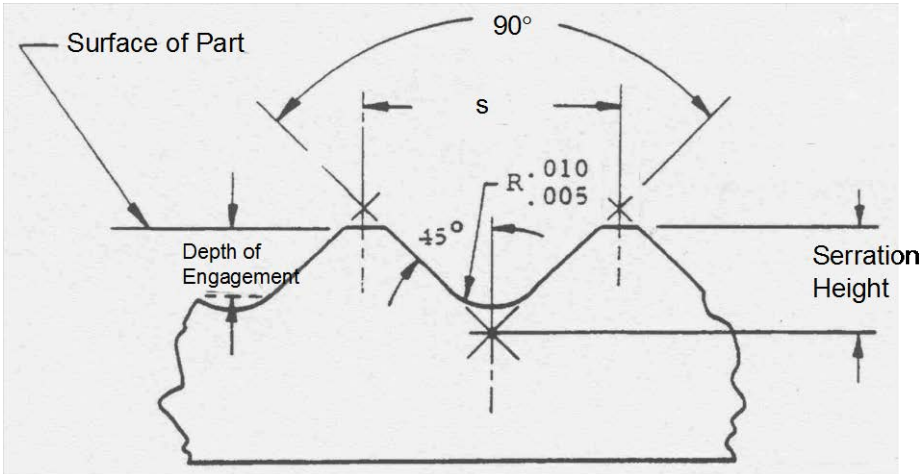

Figure 5.9.2-5 Serration Geometry

Because the amount of load transferred by the teeth is a function of the tooth geometry, close control of the tolerances of serrated joints is very important. The maximum and minimum serration height and the maximum and minimum radius at the bottom of the serration should be explicitly called out on the drawing. The depth of engagement is often denoted as a reference dimension. The tolerance on the serration height is typically 0.003 inch. The angular tolerance is typically ±0.5 degrees.

The number of teeth per inch, N, is the reciprocal of the spacing, s, and the tolerance buildup between serrations must be controlled to ensure correct load transfer. Table 5.9.2-1 provides some typical expected serration tolerances.

Table 5.9.2-1 Typical Serration Spacing Tolerances

Distance between any two teeth, L (inch)	Maximum Pitch Variation inch/inch
$1.0 \le L$	0.001
$1.0 < L \le 3.0$	0.002
$3.0 < L \le 5.0$	0.003
$5.0 \le L$	0.003 + 0.0002 in/in over 5 inches.

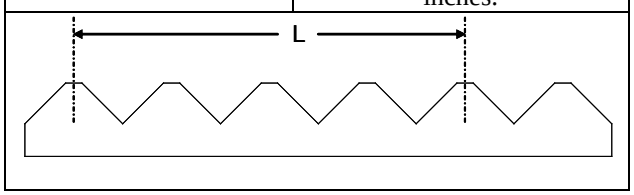

A serrated joint transfers the shear load across the mating structure via the teeth and then through the shear fasteners into the backup structure. Serrated joints can carry limited tension loads; the applied tension must be insufficient to overcome the preload, as a loss of preload will cause the joint to gap and render it unable to transmit the shear load. Table 5.9.3-1 has reduced tension allowables for friction joints.

Copyright 2017 Lockheed Martin Corporation.
Note: The current version is always the version on the Lockheed Martin network.

A fitting factor of 1.15 is applied to the analysis of the shear area of the teeth and to the net section of the last row of teeth (Section A-A, Figure 5.9.2-4). The shear fasteners attaching the serrated surfaces to the primary structure must be analyzed to carry the entire shear load in the joint. If the fasteners are shear critical, then per Section 5.2.3 it is recommended that a 0.15 minimum margin of safety on the fastener be maintained.

To determine the shear area of the serration teeth, the width of the serration at the mean height is calculated. The details of the recommended serrations are shown in Figure 5.9.2-6 and the equations developed below apply to this geometry. If the geometry of the application being analyzed varies from the recommended approach, then the analyst must derive the appropriate equations.

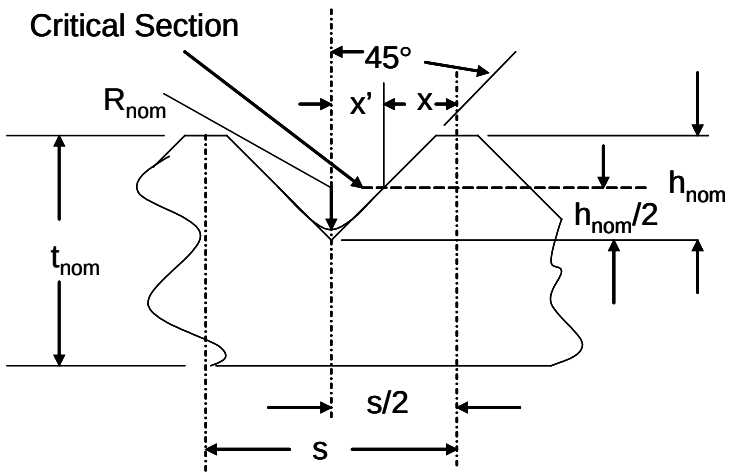

Figure 5.9.2-6 Detailed Serration Geometry

To calculate the length of the serration tooth at the critical location

$$x' = (h_{nom}/2)\tan(45°)$$

$$x = s/2 - x' \qquad \textbf{Equation 5.9.2-1}$$

where
h_{nom} is the mean serration height (in)
s is the spacing of the serration teeth (in)

To calculate the shear area of an individual serration

$$A_{tooth} = 2xw \qquad \textbf{Equation 5.9.2-2}$$

where
x is the half-width of the serration tooth calculated from Equation 5.9.2-1 (in)
w is the width of the serration across the plate (in)

To calculate the total shear area of a serrated plate

$$A = UA_{tooth} \qquad \textbf{Equation 5.9.2-3}$$

where
U is the number of full serrations
A_{tooth} is the tooth area calculated from Equation 5.9.2-2

Copyright 2017 Lockheed Martin Corporation.
Note: The current version is always the version on the Lockheed Martin network.

The allowable load due to shear can then be calculated as

$$P_{s\text{-}allow} = F_{su}A \qquad \textbf{Equation 5.9.2-4}$$

where
F_{su} is the ultimate material shear property from Reference 5-4 or other approved source (psi)
A is the total shear area of the serrated plate (in^2)

The margin of safety is then

$$M.S. = P_{s\text{-}allow}/(1.15P) - 1 \qquad \textbf{Equation 5.9.2-5}$$

where
$P_{s\text{-}allow}$ is the allowable load due to shear from Equation 5.9.2-4 (lbs)
P is the applied shear load (lbs)
1.15 is the recommended fitting factor for serrated plate shear

To calculate the net tension area of the last serration, the remaining thickness, t_r, must be determined from

$$t_r = t_{nom} - h_{nom} + 0.414R_{nom} \qquad \textbf{Equation 5.9.2-6}$$

where
t_{nom} is the total nominal thickness of the plate (in)
h_{nom} is the nominal height of the serration (in)
R_{nom} is the nominal radius of the serration (arithmetic mean) (in)

The allowable net section tension load can be calculated by

$$P_{t\text{-}allow} = F_{tu}wt_r \qquad \textbf{Equation 5.9.2-7}$$

where
F_{tu} is the ultimate material tensile strength from Reference 5-4 or other approved source (psi)
w is the width of the last serration (in)
t_r is the remaining thickness from Equation 5.9.2-6 (in)

The margin of safety can then be calculated from

$$M.S. = P_{t\text{-}allow}/(1.15P') - 1 \qquad \textbf{Equation 5.9.2-8}$$

where
F_{tu} is the ultimate material tensile strength from Reference 5-4 or other approved source (psi)
P′ is the portion of the axial load transferred through minimum section of the last serration (lbs)
1.15 is the recommended fitting factor for serrated plate net tension

Copyright 2017 Lockheed Martin Corporation.
Note: The current version is always the version on the Lockheed Martin network.

5.9.2.1 Example Problem

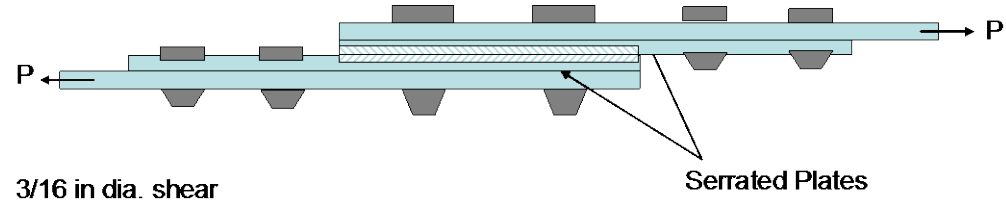

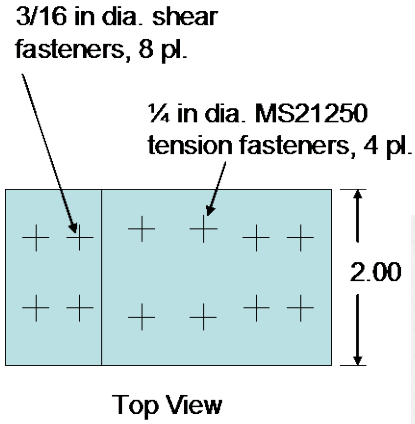

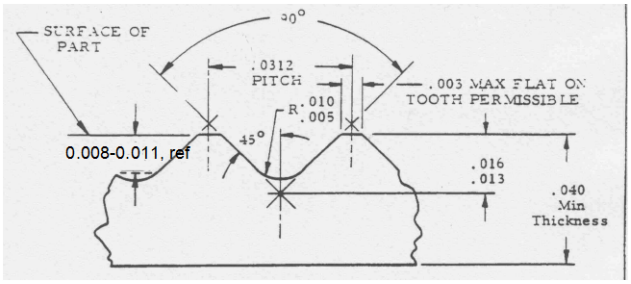

Serration Detail

Given the serrated joint shown in the figure above. The serrated plates are made from PH17-4 H1150 Stainless Steel Bar. Calculate the minimum margin of safety for the part if it has 4 complete serrations. P = 7500 lb.	From Reference5-4, F_{tu} = 134,000 psi, F_{ty} = 115000 psi, F_{su} = 79000 psi and F_{bru} (e/D=2) = 270000 psi $F_{bru\text{-}ALLOW} = F_{bru}$ (i.e. no wet pin reduction in steel bar) 3/16 in dia bolt $P_{allow\text{-}shear}$ = 2650 lbs
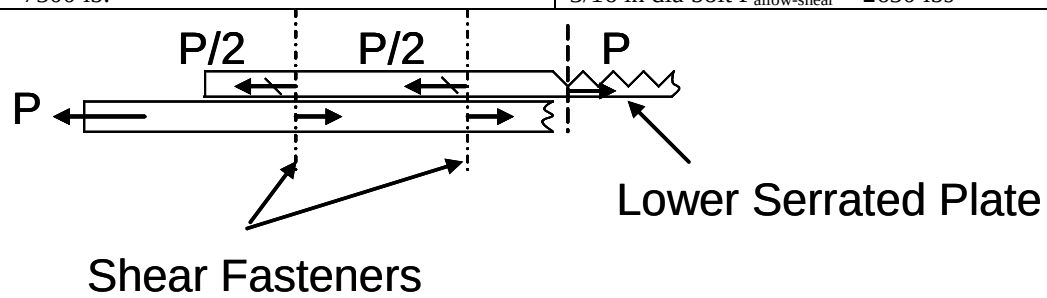 Freebody of Lower Serration. Each row of the shear fasteners carries P/2 of the total load. The minimum section at the last serration must carry the entire load, P′=P.	
Calculate the shear area of the serrations	h_{nom} = (0.013+0.016)/2 = 0.0145 $x' = (h_{nom}/2)\tan(45°)$ = (0.0145/2)1 = 0.00725 in x = s/2 - x′ = 0.0312/2 - 0.00725 = 0.00835 in A_{tooth}=2xw = 2(0.00835)(2.00)=0.0334 in^2 $A = UA_{tooth}$ = 4(0.0334) = 0.1336 in^2
Calculate the allowable load based on shear	$P_{s\text{-}allow} = F_{su}A$ = 79000(0.1336) = 10554 lbs
Calculate the margin of safety	M.S. = $P_{s\text{-}allow}$/(1.15P)-1 = 10554/(1.15•7500) -1 = 0.22

Copyright 2017 Lockheed Martin Corporation.
Note: The current version is always the version on the Lockheed Martin network.

Calculate the allowable net section load at the last serration	R_{nom} = (0.005+0.010)/2 = 0.0075 in. $t_r=t_{nom} - h_{nom} + 0.414R_{nom}$ = 0.040 - 0.0145 + 0.414(0.0075) = 0.0286 $P_{t\text{-}allow}= F_{tu}wt_r$= 134000(2)(0.0286) = 7665 lbs
Calculate the margin of safety	M.S. = $P_{t\text{-}allow}$/(1.15P)-1 = 7665/(1.15•7500) -1 = <u>-0.11</u>
Net section of the serrated plate results in a negative margin. The serrated plate needs to be redesigned for increased thickness	
Calculate the allowable load due to bearing (Equation 5.2.3-3)	$P_{br\text{-}ult} = F_{bru\text{-}allow}D_{bolt}t$ = 270000(0.190)(0.040) = 2052 lbs
Calculate the applied bolt load	P_{bolt} = 7500/4 = 1875 lbs/ 3/16 in dia fastener
Calculate the margin of safety, K_{ftg}=1.0	M.S. = $P_{br\text{-}ult}/(K_{ftg}P_{bolt})$ = 2052/1875 -1 = <u>0.094</u>
Calculate the fastener shear margin (if critical fastener margin, maintain 0.15 margin of safety)	M.S. = P_{ALLOW}/P_{bolt} – 1 = 2650/1875 -1 = <u>0.41</u>
Notes: o Only the analysis of the serrated plate is shown, analysis of the non-serrated portion of the plate would need to be done for a complete analysis. o The 0.25 in diameter tension fasteners do **not** transmit shear load. Their function is to keep the serrations in intimate contact so that load can be transferred. o The joint is not fastener shear critical – bearing is the lowest fastener margin so a minimum 0.15 margin for fastener shear is not required, although the criterion is satisfied by the current fastener shear margin. o The 1.15 factor is ONLY used on the serration shear and the serration net section tension calculations.	

5.9.3 Required Assembly Torque

To ensure that friction joints can transfer the load as required, the fasteners must be torqued to higher values than are typically specified in fastener installation specification. Experiments done in Reference 5-31 determined the minimum torque required and these are listed in in Table 5.9.3-1. The torque specified in Table 5.9.3-1 shall be specified on all drawings incorporating friction joints. When these joints are used, the following requirements shall be noted on the drawing:

- The torque shall be applied to the nut
- Re-torquing of fasteners after initial torque not allowed
- The fastener shank, both washers, all faying surfaces and the nut shall be coated/lubricated with SAE AMS-S-8802 Type II Polysulfide fuel tank sealant or equivalent. Serrations should not have sealant on any surface.

Note that the fasteners through the serrated portion of the joint shall be ¼ dia. or larger MS21250, 180 ksi tension fasteners or better with H49049 or better tension nuts.

Table 5.9.3-1 Minimum Assembly Torque – Rough Friction Joints

Thread Size	Required Torque (in-lb)	Reduced Tension Allowable (lbs)
0.25 - 28	70 - 100	4200
0.3125 - 24	160 - 225	6800
0.375 - 24	270 - 390	10400

Copyright 2017 Lockheed Martin Corporation.
Note: The current version is always the version on the Lockheed Martin network.

Also note in Table 5.9.3-1 there is a reduced tension allowable specified for the tension fasteners. Because it is imperative that the preload remain to keep the serrated surfaces in contact, this is the maximum externally applied tension load allowed.

Copyright 2017 Lockheed Martin Corporation.
Note: The current version is always the version on the Lockheed Martin network.