6 Beams and Bending

The purpose of this section is to provide guidance on the analysis of beams found in aerospace applications along with basic information on Beam Shear and Moment distributions (V-M diagrams).

Table of Contents

6		Beams and Bending	6-1
6.1		References and Nomenclature	6-2
6.2		Basic Beam Theory and Tabulated Shear-Moment Diagrams	6-12
	6.2.1	Introduction and Theory	6-12
	6.2.2	Stress Analysis of Beams	6-43
	6.2.3	Statically Indeterminate Continuous Beam Analysis	6-46
	6.2.4	Beams on an Elastic Foundation	6-47
	6.2.5	Curved Beam Analysis	6-51
6.3		Plastic Bending Analysis	6-69
	6.3.1	Introduction	6-69
	6.3.2	Simple Bending of Symmetric Sections	6-74
	6.3.3	Simple Bending of Unsymmetrical sections	6-84
	6.3.4	Local Crippling due to Bending of a Section	6-91
	6.3.5	Complex Bending	6-91
	6.3.6	Combined Stresses	6-95
	6.3.7	Unix/PC Based Analysis Tools/Guidance	6-103
	6.3.8	Analysis Examples of Plastic Bending	6-104
6.4		Lateral Stability of Beams in Elastic Bending	6-127
	6.4.1	Lateral Stability of Narrow Rectangular Beams	6-127
	6.4.2	Lateral Stability of Symmetric I-Section Beams	6-130
	6.4.3	Lateral Stability of C- and Z-Sections and Singly Unsymmetrical I-Section Beams	6-137
6.5		Beam Shear Stress	6-141
	6.5.1	Shear Stress Distribution – Symmetrical Sections	6-141
	6.5.2	Shear Stress Distributions – Unsymmetrical Sections	6-152
	6.5.3	Shear Flow Distribution – Thin Walled Open Sections	6-155
	6.5.4	Shear Flow Distribution – Thin Walled Closed Sections	6-157
	6.5.5	Shear Flow Distribution – Webs Ineffective in Bending	6-159
	6.5.6	Shear Flow Distribution – Tapered Beams	6-163
	6.5.7	Shear Flow Distribution – Thin Sheet Box Beams	6-171
6.6		Shear Beams	6-203
	6.6.1	Shear Resistant Beams	6-203
	6.6.2	Diagonal Tension Beams	6-259
	6.6.3	Intermediate Diagonal Tension Beams	6-267
	6.6.4	Intermediate Diagonal Tension Machined Beams	6-319
	6.6.5	Intermediate Diagonal Tension Beams – Analysis For Multiple Load Components	6-349
6.7		Web Penetrations	6-385
	6.7.1	Introduction and Nomenclature	6-385
	6.7.2	Determination of Initial Buckling Stress for Webs with Penetrations	6-385
	6.7.3	Holes in Shear Resistant Webs	6-387
	6.7.4	Holes in Diagonal Tension Webs	6-397
	6.7.5	Unix/PC Based Analysis Tools/Guidance	3-404
	6.7.6	Analysis Examples of Holes in Webs	3-404

Copyright 2016 Lockheed Martin Corporation.
Note: The current version is always the version on the Lockheed Martin network.

6.1 References and Nomenclature

6-1. anon., *Lockheed Martin Engineering Stress Memo Manual*, Lockheed Martin Aeronautical Systems, Marietta, GA (October 1998 Release; April 2002 Revision)

6-2. anon., *Structures Analysis Manual, Volume 1 and Volume 2*, General Dynamics Convair and Space Structures Divisions (1988)

6-3. anon., *Structures Manual, Volume 1 and 2*, LTV Aircraft Products Group, Grand Prairie, TX (June 1989)

6-4. anon., "Metallic Materials and Elements for Aerospace Vehicle Structures," *MIL-HDBK-5H*, Change Notice 1, Battelle Memorial Institute, Secretariat (1 October, 2001)

6-5. anon., "Metallic Material Properties Development and Standardization (MMPDS-xx)[1]", Battelle Memorial Institute, Secretariat (April 20xx)

6-6. Roark, R.J., *Formulas for Stress and Strain*, McGraw Hill Book Company, New York, NY (1943)

6-7. Griffel, W., *Handbook of Formulas for Stress and Strain*, Frederick Ungar Publishing Co, New York, NY, 1966

6-8. Singer, F.L., *Strength of Materials*, Harper and Row Publishing Co., New York, NY, 1962

6-9. Niles, A. and Newell, J., Airplane Structures, John Wiley and Sons, Inc., New York, NY, 1954

6-10. Seely, Fred B. and Smith, James O., Advanced Mechanics of Materials, John Wiley and Sons, Inc., New York, NY, Second Edition, 1952

6-11. Faupel, Joseph, Engineering Design, John Wiley Publishing, New York, NY, 1964

6-12. Wilson, B.J. and Quereau, J.F., " A Simple Method of Determining Stress in Flexural Curved Members," Circular 16, University of Illinois Engineering Experimental Station, Urbana-Champagne (1925)

6-13. Kindler, R.A. and Matheny, J.D., "Bending in the Plastic Range,"SRG-25, CONVAIR, Fort Worth Division (October 1956)

6-14. Cozzone, Frank, P., "Bending Strength in the Plastic Range," Journal of the Aeronautical Sciences, Volume 10, No. 5, (May 1943)

6-15. Roberts, D. and Woneis, J., "Plastic Bending of Arbitrary Cross sections Under Combined Loading," Lockheed California Company, Burbank, CA, LR23334 (March 1970)

6-16. McConnell, J.C., et.al., "Closed Form Approximation of the Plastic Bending Trapezoidal Intercept Stress," Lockheed Martin Aeronautics, Ft. Worth, TX, FZM8838, (February 2003)

6-17. Bonza, L. and Willett, N., "The Bending Modulus of Cast and Forged Sections," Lockheed Aircraft Corporation, Burbank, CA, LR2772, (August 1942)

6-18. Ludwig, B.E., "Bending Test of Shallow 75ST Extruded Beams , Lockheed Aircraft Corporation, Burbank, CA, LR9717, (February, 1954)

6-19. Beer, Ferdinand P. and Johnston Jr., E. Russell, "Mechanics of Materials,", McGraw Hill Book Co., New York, 1981

6-20. Osgood, William R. and Ramberg, W., "Description of Stress-strain Curve by Three Parameters," NACA TN 902, Washington D.C. 1942

6-21. Prince, R.K., "Bending Strength of Round Tubing," Lockheed Aircraft Corporation, Burbank, CA, LR8557, (January 1954)

6-22. Flansburg, L.K., Plastic Bending Computational Aid.xls

6-23. Hoblit, F. M. "Bending Strength in the Plastic Range", Lockheed Aircraft Corporation, Burbank, CA, LR 2072, SM 53b-1 Substantiation, (July 1947)

[1] MMPDS-xx is the successor to MIL-HDBK-5. The xx are updated with each release of the document, occurring on approximately a yearly basis.

Copyright 2016 Lockheed Martin Corporation.
Note: The current version is always the version on the Lockheed Martin network.

6-24. Timoshenko, S and Gere, James, Theory of Elastic Stability, McGraw-Hill Book Company, New York, Second Edition, 1961

6-25. Dumont, C and Hill, H.N, "The Lateral Instability of Deep Rectangular Beams," NACA TN 601, Washington D.C (May 1937)

6-26. Clark, J.W. and Hill, H. N., "Lateral Buckling of Beams," Journal of the Structural Division, ASCE, Volume 86, Issue 7, July 1960

6-27. Hill, H.N., "Lateral Buckling of Channels and Z-Beams,' Transactions of the American Society of Civil Engineers, Volume 119, 1954, p829-841

6-28. Peery, D.J., *Aircraft Structures*, McGraw Hill Book Company, New York, NY, 1950

6-29. Bruhn, E.F., *Analysis and Design of Flight Vehicle Structures*, Jacobs Publishing Inc., Carmel, IN, 1973

6-30. Niu, M., *Airframe Stress Analysis and Sizing*, Conmilit Press Ltd., Hong Kong, 1999

6-31. Shanley, F.R. and Cozzone, F.P., "Unit Method of Beam Analysis", Journal of the Aeronautical Sciences, Vol. 8, Number 6, June 1941

6-32. anon., *Machined Part Design and Manufacturing Standard* , LM specification 2GSA00003 Rev. E, October 2007

6-33. Kuhn, P., et al., "A Summary of Diagonal Tension, Part I - Methods of Analysis", NACA TN 2661, May 1952

6-34. Kuhn, P., "Strength and Stiffness of Shear Webs With and Without Lightening Holes," NACA ARR L402, Washington D.C. (June 1942)

6-35. Kuhn, P., "Strength and Stiffness of Shear Webs with Round Lightening Holes Having 45° Flanges," NACA ARR L323, Washington D.C. (December 1942)

6-36. Anevi, G., "Experimental Investigation of Shear Strength and Shear Deformation of Unstiffened Beams of 24-ST ALCLAD with and Without Flanged Lightening Holes,", SAAB TN 29, Linkoping, Sweden (1954)

6-37. Maddux, G.E., "Stress Analysis Manual,"AFFDL-TR-69-42,Technology Incorporated, Dayton, OH (1969)

6-38. Niu, M. C. Y., Airframe Structural Design, Technical Book Company, Los Angeles, CA (October 1990)

6-39. King, K.M., "Rings Used for Shear Web Hole Reinforcement," Aero Digest, Volume 71, Number 2 (August 1955)

6-40. Botman, M., "Shear Tests on 24ST Unstiffened and Stiffened Webs with Flanged Holes, Part 2," Report S.446, National Luchtvaartlaboratorium, Amsterdam, Holland (1954)

6-41. Flansburg, LK, et.al., "Derivation of Various Parameters for Design of Webs With Penetrations," FZM8865, Lockheed Martin Aeronautics (July 2003)

6-42. Flansburg, L.K., Web Penetration Computational Aid

6-43. Flansburg, L.K., Web Penetration Analysis Sheets

6.1.1 General Section 6 Nomenclature

Symbol	Definition	units
A	Area	in^2
c.g.	Centroid	--
C_w	Beam Warping Constant	in^6
CW	Clockwise	--
CCW	Counterclockwise	--
e	strain	in/in
E	Modulus of Elasticity (Young's Modulus)	--
f	Applied Stress	psi
F	Force	lbs
f_A	Axial Stress	psi

Copyright 2016 Lockheed Martin Corporation.
Note: The current version is always the version on the Lockheed Martin network.

Symbol	Definition	units
f_b	Bending Stress	psi
f_c	Compression Stress	psi
f_s	Shear Stress	psi
F_{cc}	Allowable Crippling Stress	psi
F_{col}	Allowable Column Buckling Stress	psi
F_{cy}	Material compression yield stress property	psi
F_{cu}	Material ultimate compression stress property	psi
FEA	Finite Element Analysis	--
F_{su}	Material ultimate shear stress property	psi
F_{tp}	Material proportional stress	psi
F_{ty}	Material tensile yield stress property	psi
F_{tu}	Material ultimate tensile stress property	psi
G	Material Shear Modulus	psi
I	Moment of Inertia	in^4
IDAT	Integrated Detail Analysis Tools	--
I_{max}, I_{min}	Moments of inertia about principal axes	in^4
I_p	Polar Moment of Inertia	in^4
I_x, I_y	Moment of Inertia about the x and y axes, respectively	in^4
I_{xy}	Product of Inertia	in^4
K	St Venant Torsion Constant	in^4
L	Beam or Column Length	in
L'	Column Effective Length	in
M, m, m_{appl}	Applied Moment	in-lb
M_{allow}	Allowable Moment	in-lb
M.S.	Margin of Safety	--
n	Traditional Ramberg-Osgood shape parameter (accurate near yield)	--
N.A.	Neutral Axis	--
n_t	Modified Ramberg-Osgood stress-strain curve shape parameter (accurate near ultimate)	--
P	Applied Axial load	lb
P_{cr}	Column Buckling Load	lb
Q	First Area Moment	in^3
q	Applied web shear running load	lb/in
V	Applied Shear load	lb
t	Thickness	in
x	Length Along Beam x axis	in
y	Distance Along y axis	in
x,y,z axes	Any defined centroid x and y axes	--
x',y',z' axes	Any defined centroid x and y principal axes	--

6.1.2 Supplemental Nomenclature for Section 6.2

Symbol	Definition	units
a,b,c and d	Beam Dimensions	in
$A_{\lambda x}$, $B_{\lambda x}$, $C_{\lambda x}$, $D_{\lambda x}$	Integration Constants for Beams on an Elastic Foundation	--
A’	Area Between Analysis Location and Extreme Fiber	in^2
b,c	Cross-sectional Dimensions	in
b’	Projecting Cap Width, Curved Beams	in
b_{eff}	Effective Curved Beam Cap Width	in

Copyright 2016 Lockheed Martin Corporation.
Note: The current version is always the version on the Lockheed Martin network.

Symbol	Definition	units
c	Distance from the Beam Neutral Axis to the Extreme Fiber	in
c_I, c_O	Distance from Curved Beam Centroidal Axis to Inner and Outer Extreme Fiber, respectively	in
dx	Incremental Beam Segment	in
F_{allow}	Allowable Stress	psi
$f_{b\text{-}tr}$	Transverse Bending Stress	psi
$f_{I\text{-}axial}$, $f_{O\text{-}axial}$	Axial Stress on Inner and Outer Curved Beam Caps, respectively	psi
f_r	Radial Stress	psi
h	Cross-sectional dimension – Beam Height of Solid Sections	in
h	Height between Cap Centroids For Thin Walled Sections	in
K_I, K_O	Curved Beam Peaking Factor	--
k_y	Foundational Stiffness for Elastic Foundations	lb/in
R	Radius of Curvature	in
R_A	Axial Stress Ratio (Applied Axial Load / Allowable Axial Load)	--
R_b	Bending Stress Ratio (Applied Bending Moment / Allowable Bending Moment)	--
$R_{b\text{-}tr}$	Transverse Bending Stress Ratio (Applied Transverse Bending Stress / Allowable Transverse Bending Stress)	
R_{bar}	Combination of Individual Stress Ratios per Interaction Rules	--
R_c	Radius of Curvature to Centroidal Axis	in
R_i	Force Reactions	lbs
R_{n1}, R_{n2}, R_{n3}	Stress Ratios for use in Combined Margin of Safety Interactions (reference Section 6.2.5.4)	--
R_r	Radial Stress Ratio (Applied Radial Bending Stress / Allowable Radial Bending Stress)	--
w	Applied Running Load	lb/in
W	Integration of *wdx* or Point Load	lb
w_I, w_O	Radial Running Load	lb/in
y	Deflection of Beam	in
Z	Curved Beam Section Factor	--
Z'	Reduced Curved Beam Section Factor for Thin Walled Sections	--
Subscripts		
-ALLOW	Allowable	--
-A, -B, -C, -D	Associated with Location A, B, C or D on Beam, Respectively	--
-AB, -BC…	Between A and B, B and C,… on Beam, Respectively	--
-b	Bending	--
-cap	Associated with the Cap	--
-flange	Associated with the Flange	--
-I or “,I”	Curved Beam Inner Cap	--
-max, -min	Maximum or Minimum, respectively	
-O or “,O”	Curved Beam Outer Cap	--
-r	Radial	--
-tr	Transverse	--
-w, -web	Associated with the web	--
-x,-y,-z	Associated with the x,y, or z axes, respectively	--
Greek Symbols		

Copyright 2016 Lockheed Martin Corporation.
Note: The current version is always the version on the Lockheed Martin network.

Symbol	Definition	units
α	Flange Width Effectivity Factor	--
β	Transverse Bending Stress Factor	--
Δ	Deflection	in
θ	Slope	radians
θ		radians
λ	Characteristic Wavelength	--
φ	Angle between Arbitrary Axis and Principal Axis	radians

6.1.3 Supplemental Nomenclature for Section 6.3

Symbol	Definition	units
A	Area	in^2
c	Distance from neutral axis to extreme fiber	in
c_{larger}	For unsymmetrical sections, distance from neutral axis to extreme fiber -larger distance	in
$c_{smaller}$	For unsymmetrical sections, distance from neutral axis to extreme fiber -smaller distance	in
C_{shear}	Shear Peaking factor used when section is undergoing plastic bending.	--
e	Strain	in/in
e_{cc}	Strain at F_{cc}	in/in
e_i	Strain at intermediate fiber	in/in
e_{fiber}	Strain at the extreme fiber	in/in
e_{max}	Strain at extreme fiber when cross section strain is limited by stain cutoff	in/in
e_o	Material elongation from Reference 6.0-4 or 6.0-5	in/in
e_p	Plastic strain	in/in
$e_{p_{tu}}$	Plastic strain at ultimate stress	in/in
e_u	Strain at ultimate stress	in/in
$f_{subsection}$	Stress in subsection of total cross section under analysis	psi
f_o	Trapezoidal intercept stress	psi
f_s	Shear stress	psi
I	Moment of inertia of the entire section about the neutral axis	in^4
k	Section factor	--
K_{geom}	In tension/bending interaction, geometric factor	--
k_{inv}	Geometric factor used in shear peaking calculations	--
k_{plas}	Degree of plasticity used in shear peaking calculations	--
k_{rdc}	Factor applied to applied loads to obtain zero margin	--
$k_{subsection}$	In unsymmetrical sections, section factor of each segment.	--
m_{appl}	Applied moment	in-lb
$(mc/I)_b$	Modulus of Bending	psi
$(mc/I)_{b,k=2}$	Modulus of Bending at a section factor of 2.0	psi
m_x, m_y	Moment about x and y axes	in-lb
$m_{x'}$, $m_{y'}$	Moment about principal x and y axes	in-lb
m_r	Moment of resistance – rectangular distribution	in-lb
m_t	Moment of resistance – triangular distribution	in-lb
n	Traditional Ramberg-Osgood shape parameter (accurate near yield)	--

Copyright 2016 Lockheed Martin Corporation.
Note: The current version is always the version on the Lockheed Martin network.

Symbol	Definition	units
n_t	Modified Ramberg-Osgood stress-strain curve shape parameter (accurate near ultimate)	--
PLASBEND	Computer routine for plastic bending in IDAT	--
r	Interaction exponent for axial tension and bending stresses	--
r_x, r_y	Interaction exponent for axial tension and bending stresses for x and y axes.	--
R_b	Ratio of applied moment to allowable moment	--
$R_{bx'}$, $R_{by'}$	Ratio of applied moments to allowable moment about the x and y principal axes.	--
R_c	Ratio of applied axial compression load to allowable column load	--
R_s	Ratio of applied shear stress to allowable shear stress	--
R_t	Ratio of applied axial tension load to allowable tension load	--
SM53	Stress Memo 53, Reference 6-1	in
U_{bt}	Bending – tension utilization factor	--
y_{cc}	Distance from neutral axis to crippling critical fiber (due to bending)	in
y_i	Distance from neutral axis to intermediate fiber	in
Subscripts		
-ALLOW	Allowable	--
-b	Bending	--
-calc	Calculated, in an iterative solution	--
-est	Estimated	--
-i	Intermediate fiber location	--
-increment	Incremental value used in iterative solution	--
-larger-c, -smaller-c	In an unsymmetrical section, referring to the subsection with the larger or smaller distance from the centroid or neutral axis to the outer fiber (c)	--
-subsection	The designator for one of two portions making up the entire cross section in an unsymmetrical section	--
-sub	Pertaining to a portion of the area of a total cross section	--
-tp	Pertaining to material proportional limit	--
-x, -y	About the x or y axes, respectively	--
-1,-2	Pertaining to subsection 1 or 2 in unsymmetrical section calculations.	--
Greek Symbols		
Δf	Difference in stress	psi
γ	Material Plasticity Factor	
θ	Angle from arbitrary centroid x axis to principal x axis (+CCW)	

6.1.4 Supplemental Nomenclature for Section 6.4

Symbol	Definition	units
A_{cap}	Cap Area	in^2
C_1, C_2, C_3	Constants	--
e	Distance from the Shear Center to the Centroid	in
k	$k = e + \frac{1}{2I_x}\int_A y(x^2+y^2)dA$	in
K_L, K'_L	Lateral Stability Constant	--

Copyright 2016 Lockheed Martin Corporation.
Note: The current version is always the version on the Lockheed Martin network.

Symbol	Definition	units
M_{cr}	Critical Allowable Moment	in-lb
n	Constant	--
s	Distance from the Shear Center to the Load Point	in
β	Parameter Relating Cross Section Torsional Stiffness to Warping Stiffness	--

6.1.5 Supplemental Nomenclature for Section 6.5

Symbol	Definition	units
A	Enclosed Area – Box or Web, as applicable	in^2
A	Area	in^2
b	Thickness	in
B	Width or Length	in
c	Distance from Centroid or Neutral Axis to Extreme Fiber	in
dA	Incremental Area	in^2
dx	Incremental Length in the x direction	in
D	Outer Diameter	in
d	Inner Diameter	in
d	distance	in
e	distance	in
h, H	height	in
H	Lateral Force	lbs
K	Geometric Factor	-
M	Moment	in-lbs
Q	Total Shear Force	lbs
q’	Skin Shear Flow for Open Box Section	lb/in
R	Mean Radius	in
R	Reaction Force	lbs
T	Traction Force	lbs
T	Torsion	in-lbs
x_{bar},y_{bar}, z_{bar}	Distance from axis to section centroid along x,y and z axes, respectively	in
Subscripts		
1,2,3,4,5,…	Signifying an element or section	--
a,b	Cell a or b	--
A,B,C,D,E	Subsections of a Cross Section	--
above	Above a Particular Axis or Location	--
av	Average	--
below	Below a Particular Axis or Location	--
f	Associated with a Flange	
-h, H	Horizontal	--
i	The ith element	
OS	Open Section	--
s	Associated with a Stiffener	
-v, V	Vertical	--
xz	Associated with the xz plane	--
x,y,z	Associated with the x, y, or z planes	--
Greek Letters		

Copyright 2016 Lockheed Martin Corporation.
Note: The current version is always the version on the Lockheed Martin network.

α	Geometric Shape Factor	--
ΔP	Changes in Stringer Axial Loads due to Bending	lbs
Δs	Web Length Between Stiffeners	in
Δy	Length of a Beam Segment	in
θ	Angle	^{o} or rad
φ	Angle from Load Line to Analysis Location	rad
φ	Box Angle of Twist	rad

6.1.6 Supplemental Nomenclature for Section 6.6

Symbol	Description	Units
A_{cap}	Beam cap cross-sectional area	in^2
A_u	Stiffener cross-sectional area (excluding web)	in^2
$A_{u,e}$	Effective stiffener area	in^2
b	Length of stiffener outstanding leg	in
B	Total width of flange or stiffener	in
C_1	Stress concentration factor for web shear stress	--
C_2	Stress concentration factor for web shear stress	--
C_3	Stress concentration factor for cap bending stress	--
d	Stiffener spacing	in
d_c	Clear stiffener spacing	in
d_h	Fastener head diameter	in
D_{fast}	Fastener diameter	in
e	Distance from web mid-plane to centroid of single-sided stiffener	in
E	Elastic modulus	psi
F_b	Web bending stress	psi
$f_{a,sec}$	Flange secondary axial compression stress	psi
f_s	Web shear stress	psi
$f_{s,max}$	Maximum web shear stress	psi
$F_{o,e}$	Elastic stiffener forced crippling stress	psi
$F_{cr,el}$	Elastic web buckling stress	psi
F_{cr}	Web buckling stress	psi
f_u	Stiffener stress due to diagonal tension effects	psi
$f_{u,max}$	Maximum stiffener stress due to diagonal tension effects	psi
$f_{u,r}$	Stiffener stress due to beam curvature	psi
F_{all}	Allowable web shear stress including fastener and material correction	psi
F^*_{all}	Basic allowable web shear stress	psi
FF	Fastener type correction to web allowable strength	--
G	Shear modulus	psi
h	Beam Outer Mold Line (OML) height	in
h_c	Clear web height	in
h_e	Beam effective height, measured between cap centroids	in
h_r	Beam height measured between web-to-flange fastener rows	in
h_u	Stiffener height measured between stiffener-to-flange fastener rows	in
h_w	True web height	in
I_C	Compression cap moment of inertia	in^4

Copyright 2016 Lockheed Martin Corporation.
Note: The current version is always the version on the Lockheed Martin network.

I_{cap}	Beam cap (flange) moment of inertia cap about its neutral axis	in^4
IDT	Intermediate Diagonal Tension	--
I_{PB}	Post-buckled beam moment of inertia	in^4
I_{SR}	Shear resistant beam moment of inertia	in^4
$I_{stiffener}$	Required moment of inertia for the stiffener	in^4
I_T	Tension cap moment of inertia	in^4
I_u	Stiffener moment of inertia	in^4
k	Diagonal tension factor	--
k_{all}	Maximum allowable diagonal tension factor	--
k_{ss}	Web buckling coefficient, simply supported edges	--
L_e	Stiffener effective column length	in
M	Beam bending moment	in-lb
M_{pr}	Beam primary bending moment	in-lb
M_{sec}	Beam flange secondary bending mome	in-lb
M^{fillet}	Flange bending moment at machined fillet	in-lb
MF	Material type correction to web allowable strength	--
N_u	Required web pull-off strength at stiffener attachments	lb/in
P_{sec}	Flange secondary axial compression load	lb
P_{pt}	Web pull-through strength	lb
P_u	Stiffener compression load due to diagonal tension effects	lb
PB	Post-Buckled	--
Q	Static moment of one stiffener about web mid-plane	in^3
q	Web shear flow	lb/in
q_{cr}	Web buckling shear flow	lb/in
q_r	Web-to-flange resultant shear flow	lb/in
R	Web buckling Ratio	--
R_d	Web restraint coefficient along cap edge	--
R_h	Web restraint coefficient along stiffener edge	--
RTR	Ratio-To-Requirement	--
s_u	Stiffener fastener spacing	in
SR	Shear Resistant	--
t	Web thickness	in
t_f	Cap thickness – attached flange	in
$t_{f,o}$	Cap thickness – outstanding flange	in
t_u	Stiffener thickness – attached flange	in
$t_{u,o}$	Stiffener thickness – outstanding flange	in
V	Beam applied shear load	lb
w	Beam compressive running load due to curvature	lb/in
W	Stiffener compressive load due to curvature	lb
α	Diagonal tension angle, degrees	degrees
α_{PDT}	Pure diagonal tension angle, degrees	degrees
ρ	Beam radius of curvature	in
ρ_u	Stiffener radius of gyration	in
ωd	Flange flexibility factor, Equation 6.6.3-8	--

6.1.7 Supplemental Nomenclature for Section 6.7

Symbol	Definition	units
a	Panel long dimension, used in determination of F_{scr}	in

Copyright 2016 Lockheed Martin Corporation.
Note: The current version is always the version on the Lockheed Martin network.

Symbol	Definition	units
A_{hole}	Area of hole in web	in^2
A_{ring}	Cross-sectional area of reinforcement ring doubler	in^2
A_{st}	Area of stiffener	in^2
$A_{u,e}$	Effective area of stiffener as defined in diagonal tension methodologies, Section 6.6	in^2
b	Distance between adjacent holes	in
b_s	Distance between stiffeners	in
D	Diameter of web penetration	in
F_{all}^*	Allowable web shear stress as defined in diagonal tension methodologies, Section 6.6	psi
$f_{o,e}$	Allowable forced crippling stress as defined in diagonal tension methodologies, Section 6.6	psi
$f_{o\text{-}hole}$	Modified forced crippling stress	psi
f_s	Applied gross shear stress	psi
$f_{s\text{-}net}$	Applied net shear stress	psi
$f_{s\text{-}net,\ horizontal}$	Applied net shear stress in horizontal web cut	psi
$f_{s\text{-}net,\ fastener}$	Applied net shear stress in vertical web cut fastener line	psi
$f_{s\text{-}net,\ vertical}$	Applied net shear stress along web to cap	psi
F_s	Allowable shear stress	psi
F_{scr}	Web initial buckling stress	psi
h	Height from (lower) beam cap centroid to (upper) beam cap centroid	in
I_{st}	Area moment of inertia of beam web stiffener	in^4
K_1	Hole correction factor – shear resistant, unstiffened beam	--
K_2	Hole correction factor – shear resistant, stiffened beam	--
K_3	t/t_{st} hole correction factor – diagonal tension, stiffened beam	--
K_4	D/h hole correction factor – diagonal tension, stiffened beam	--
$K_{collapse}$	Web Shear Collapse Parameter	--
K_{hole}	Hole correction factor – initial buckling calculation	--
l	Flange length	in
$P_{all,t}$	Allowable fastener tension load	lb
P_{allow}	Joint allowable	lb
P_{end}	Stiffener end load	lb
P_{fas}, P_r, P_{st}	Applied fastener shear load	lb
P_u	Applied fastener tension load	lb
q	Applied web shear running load	lb/in
q_{fas},q_r	Applied fastener shear running load	lb/in
q_t	Applied fastener tensile running load as defined in diagonal tension methodologies, Section 6.6	lb/in
$q_{t\text{-}hole}$	Modified applied fastener tensile running load	lb/in
t	Web thickness	in
t_{eq}	Equivalent web thickness, accounting for hole	in
t_{ring}	Reinforcement ring thickness	in
$t_{ring\text{-}shear}$	Required ring thickness due to shear loading	in
$t_{ring\text{-}tension}$	Required ring thickness due to tension loading	in
t_{stiff}	Attaching flange thickness of web stiffeners	in
v	$(F_{tu}/F_s)(A_{ring}/A_{hole})$	--
W	Width of reinforcement ring doubler	in

Copyright 2016 Lockheed Martin Corporation.
Note: The current version is always the version on the Lockheed Martin network.

6.2 Basic Beam Theory and Tabulated Shear-Moment Diagrams

Section 6.2.1 provides an introduction and overview of basic beam theory and the construction of free-body diagrams for beams. It also provides tables of common, standard beam solutions for simple support, cantilever, simple-fixed and fixed beams for applications which are useful in aircraft design. Section 6.2.2 discusses the calculation of beam stresses, allowable loads and margins of safety. Often when analyzing aircraft structure, beams are not of uniform cross section. Section 6.2.3 provides an overview of continuous beams while Section 6.2.4 provides a discussion of beams on an elastic foundation, both of which are most often solved using Finite Element (FEA) analysis or specific tools in the Integrated Detail Analysis Tool Suite, IDAT. Section 6.2.5 discusses curved beam analysis.

6.2.1 Introduction and Theory

Drawing a free-body diagram of the beam to determine the internal loads is a very important part of the analysis process and is valuable in understanding the behavior of the structure. Even when using a finite element model it is recommended that a free-body loading diagram be constructed for the stress analysis. This section also provides a summary of the most commonly used beam shear, moment and deflection solutions with various end constraints and load distributions. Section 6.2.1.1 discusses the construction of free-body diagrams to determine the beam shear and moment diagrams.

Beams are structural members which resist load by bending. The bending is introduced into the beam through externally applied transverse forces and the resulting constraint reactions along with its own weight. Bending can also result from axial loads which do not pass through the section centroid. Unlike two force members, the shear forces and bending moments can vary along the length of the beam.

Beams are statically determinate if the static equilibrium equations are sufficient for determining the internal forces and reactions on the beam. The reacting degrees of freedom are determined by the structural constraints. Conversely, beams are statically indeterminate if the static equilibrium equations are not sufficient to determine the internal forces and reactions. In this case other equations will be necessary to determine the internal forces and reactions. Statically indeterminate beams are said to be redundant, meaning they have more reactions than necessary to maintain static equilibrium.

The assumptions underlying the equations for the analysis of pure elastic bending of initially straight, homogeneous beams are listed in Table 6.2.1-1. The order of the assumptions is important and the analysis is valid only if, for a particular beam, all assumptions are valid. The table also provides remedies for the situation where the assumptions are violated which may involve alternate, perhaps more complex analyses.

Copyright 2016 Lockheed Martin Corporation.
Note: The current version is always the version on the Lockheed Martin network.

Table 6.2.1-1 Summary of Assumptions for Beam Analysis

Assumption	Valid for	Invalid for / Alternate Approach
Plane Cross sections remain plane, *i.e.*, the change in length between adjacent sections varies linearly over the cross sections	1. Cross sections away from points of local load introduction	1. Near points of local load introduction
	2. With gradual change in cross section along length	2. In regions of rapid cross-sectional changes a. Use theory of elasticity b. Apply stress concentration factors c. Test
	3. If end conditions are consistent with the assumption	
Strain is proportional to distance from axis of zero strain ($e = \frac{y}{R}$)	Initially straight beams, *i.e.*, Radius to Beam Height is greater than 10, (*R/h>10*)	Initially curved beams – See Section 6.2.5
Stress is proportional to distance from axis of zero stress ($f = \frac{Ey}{R}$)	Homogeneous beams within the elastic range, *i.e.*, stress is proportional to strain, (*f=Ee*)	Stress exceeds proportional limit – See Section 6.3
Axis of zero stress (N.A.) passes through centroid of cross-sectional area	For pure bending, *i.e.*, axial load is equal to zero, (P=0)	Axial load, P, is present Neutral axis is offset from centroid. See Section 6.3 and Section 8.3
Axis of zero stress (N.A.) coincides with axis of applied bending moment	Axis of applied bending moment is a principal axis	Unsymmetrical bending, *i.e.*, axis of bending is not a principal axis. Resolve bending into components about principal axes.
	Product of inertia is 0	
	An axis of symmetry is a principal axis	
Lateral contraction or expansion is not prevented	"Narrow beam", *i.e.*, width is approximately the same as depth	"Wide beam" or plate where width is >> depth. Include Poisson's effects.

The general equations for a beam in bending are given in Table 6.2.1-2. The positive sign convention is shown in Figure 6.2.1-1 which is typical for classical theory. Finite Element Analysis (FEA) programs and other computerized analysis methods may have other sign conventions. Understanding the relationship between the deflections, slope, bending moment, shear and loads aids the analyst in understanding the overall behavior of the structure. This understanding can be used as a reasonability check for FEA results, free-body diagrams, and test results.

If results from hand analysis are compared to the results from FEA analysis, differences may occur due to differences in governing theory; however, differences may also occur due to modeling errors and/or invalid or inconsistent constraints and the analyst is cautioned to perform a thorough check of the finite element model before use.

Copyright 2016 Lockheed Martin Corporation.
Note: The current version is always the version on the Lockheed Martin network.

Table 6.2.1-2 General Equations for a Beam in Bending

Description	In Terms of Deflection	In Terms of Bending Moment	In Terms of Applied Load
Deflection	Δ=y	$\Delta = \iint \frac{M}{EI} dx dx$	
Slope	$\theta = \frac{dy}{dx}$	$\theta = \int \frac{M}{EI} dx$	
Bending Moment	$M = EI \frac{d^2y}{dx^2}$	M	$M_x = M_o + V_o x - M_{Loads\ on\ Segment}$
Shear	$V = EI \frac{d^3y}{dx^3}$	$V = \frac{dM}{dx}$	$V_x = V_o + \sum F_{external-segment}$
Load	$w = EI \frac{d^4y}{dx^4}$	$w = \frac{dV}{dx} = \frac{d^2M}{dx^2}$	w

where
Δ, y are deflection (in)
θ is the slope of the beam (radians)
M is bending moment (in-lb)
E is Modulus of Elasticity or Young's Modulus (psi)
I is the moment of inertia (in^4)
V is the transverse shear (lb)
w is the applied load (lb/in)

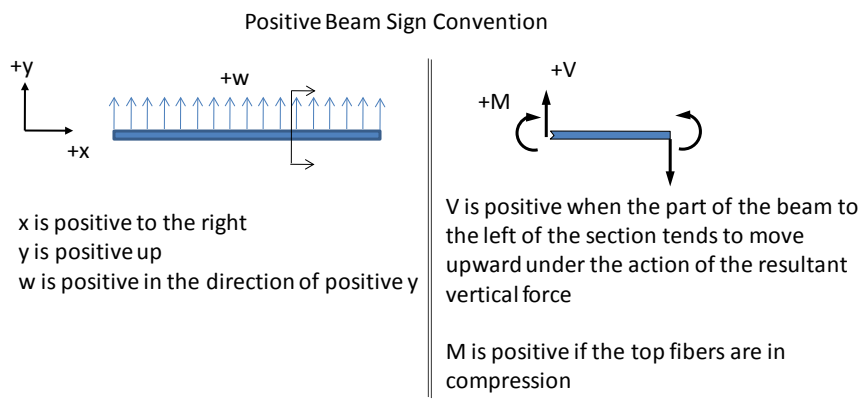

Figure 6.2.1-1 Positive Sign Convention for Beams

This section discusses straight beams of constant section properties throughout its length.

6.2.1.1 Statically Determinate Beams – Shear and Moment Equations

For a beam there are two sets of governing equilibrium equations.

$$\sum \vec{F} = 0$$

$$\sum \vec{M} = 0$$

Equation 6.2.1-1

where
F are vector forces (lb)
M are vector moments (in-lb)

Copyright 2016 Lockheed Martin Corporation.
Note: The current version is always the version on the Lockheed Martin network.

At any length along the beam, the shear and moment may be determined through the use of these equations of equilibrium. To start the process the member is drawn as a free body with all applied loads shown. Then by examining the specific structural application, *i.e.*, how the member is joined to adjacent structure and the stiffness the adjacent structure provides, assumptions concerning the degrees of freedom of the restraints are made and illustrated on the free-body diagram. The equilibrium equations can be formulated and solved for the reactions. Once the reactions have been determined, a plot of the internal shears and moments can be made. Table 6.2.1-3 provides a summary of the degrees of freedom for different end-constraints and some possible applications.

Table 6.2.1-3 Summary of Constraints

Constraint type	Symbol	Reaction Discussion	Possible Applications
Simple support or pinned		Force constraint only. No moment capability at this constraint. The beam is free to rotate.	-Shear Clips -Shallow Beams, even if tied in at web and flange -Skin splices with no stringer end attachment
Fixed		Force and moment capability at this constraint. *Note: In addition to the beam end having attachments capable of transferring load, adjacent structure must also be capable of reacting it, often in torsion.*	-Deep beams attached at both cap and web -Skin splices with stringer end attachment
Guided		Moment constraint only. No force restraint at this constraint. The beam is free to move up/down or left/right.	- Analysis of lug side load for bending - Analysis of a fastener in a thick stack-up, *e.g.*, a beam in a socket
Roller		Force constraint in one axis, free to move in the other axis.	
Free	--	No constraints. Beam is free to rotate and move up/down. (Opposite end of beam is usually fixed, *i.e.*, cantilever)	- Support brackets for electrical, fuel or hydraulic lines - Leading edges

In initial or preliminary design, it is often useful to use overlapping assumptions when sizing beams. That is, assume the beam is fixed when determining the end fitting /attachment scheme and assume it is simple support when sizing the beam. In this way, as the design evolves, there are options available to the design/analysis team. The steps to constructing a free-body diagram for a statically determinant beam are listed in Table 6.2.1-4 and illustrated in an example in Section 6.2.1.1.1.

Table 6.2.1-4 Summary of Steps in the Determination of Beam Internal Shears and Moments

Step	Description	Discussion
1.	Draw a free-body of the member and develop the Equilibrium Equations to determine reactions	There should be as many equilibrium equations as there are unknown reaction forces and moments
2.	Once the reactions have been determined check the results using an additional Equilibrium Equation.	Check that the sum of all forces and moments (applied and reactions) are, indeed, zero.
3.	Redraw the free-body diagram with all forces and moments (applied and reactions) shown.	

Copyright 2016 Lockheed Martin Corporation.
Note: The current version is always the version on the Lockheed Martin network.

Step	Description	Discussion
4.	Start at the left end and work toward the right end to develop the equations for internal shears and moments for each segment of the beam.	- A segment is a section of the beam between reactions or applied loads - The shear and moment summation for each subsequent segment starts with the shear and moment from the previous segment. - If there is no additional transverse load, the shear load will be constant within a segment.
5.	At the right end the internal shears and moments should sum to the reactions as a check.	
6.	Draw Shear and Bending Moment Diagrams	Close the shear and bending moment diagrams using the appropriate reactions.

6.2.1.1.1 Example of Beam Free-body Construction

Given: For the beam shown at the right, construct a free-body diagram.

Note the beam is simple support with an overhang on the left edge and has vertical reactions only at R_1 and R_2

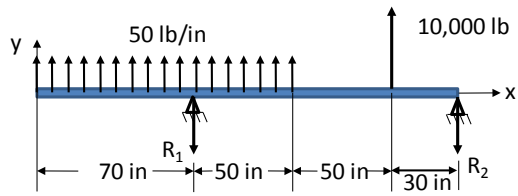

1. Develop the equilibrium equations: • There are two unknowns, R_1 and R_2. • Develop two equilibrium equations.	Sum Moments about R_1: + CW 50 lb/in(70 in)(70 in/2)-50 lb/in(50 in)(50 in/2)-10000lb(100 in)+R_2(130 in)=0	R_2=7231 lb (positive as shown)
	Sum Moments about R_2: +CW 50 lb/in(120 in)[(70+50)/2 in+50 in+30 in]-R_1(130 in)+10000lb(30 in)=0	R_1=8769 lb (positive as shown)
2. Sum forces in y to check results	ΣF_y=0: 50 lb/in(120 in)-R_1+10,000 lb-R_2=0 6000-8769+10000-7231=0	R_1 and R_2 check

3. Redraw free-body with reaction forces shown

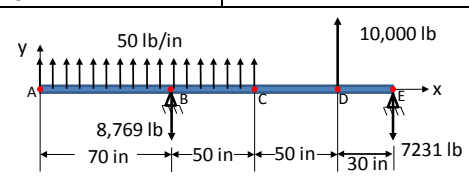

Discussion	Equations/ Calculations	Illustration
4. For each segment of the beam, develop the equations for shear and moment. - Divide beam where there is a change in load or a reaction. - Start at the left end. At any point in this segment the shear will be the summation of all loads to the left of the point being examined.	Segment A-B: At any point x where x<70 in; +CW V=50x M=50x(x/2)=25x^2 At x=0 in, V=0, M=0 At x=70 in (just to the left of B), V=50(70)=3500 lb	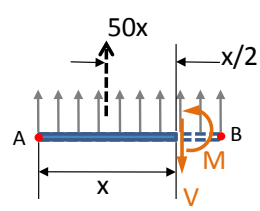

Copyright 2016 Lockheed Martin Corporation.
Note: The current version is always the version on the Lockheed Martin network.

- In the construction of a free-body, the load resulting from a distributed load is calculated as the distributed load times the applicable length of the beam. It is applied at the midpoint of the distribution. - The moment will be calculated using only the loads to the left of the point being examined.	$M=25(70)^2$ =122500 in-lb	
Continuing to work from left to right. - Note that the shear and moment summations start with the shear and moment from the previous segment and add any additional loads or moments.	Segment B-C: At any point 70 in <x<120 in V=50x-8769 $M=25x^2-8769(x-70)$ At x = 70 in (just to the right of B) V=50(70)-8769 = -5269 lb $M=25(70)^2-8769(70-70)$ =122500 in-lb At x = 120 in (just to the left of C) V=50(120)-8769 = -2769 lb $M=25(120)^2-8769(120-70)$ =-78450 in-lb	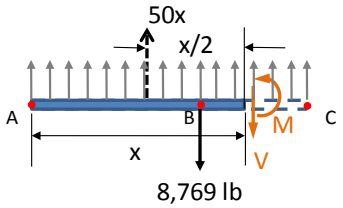
- In this segment the shear is a constant value since there are no transverse loads applied. Shear is also negative. - In this segment the moment ranges from -78,450 in-lbs for x=120" to -216,900 in-lb for x=170" and is also negative.	Segment C-D: At any point 120 in<x<170 in V=50(120)-8769=-2769 lbs M=50(120)(x-60)-8769(x-70)= 253,830-2769x At x = 120 in: (just to the right of C) V= -2769 lbs M=253,830-2769(120) = -78450 in-lb At x = 170 in (just to the left of D) V= -2769 lbs M=253,830-2769(170) = -216900 in-lb	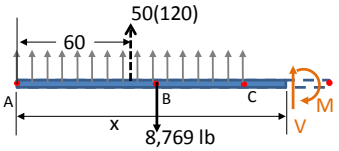
In this segment the shear is again a constant value since there are no transverse loads applied. Shear is positive and equal and opposite to the reaction force at right end of the beam.	Segment D-E: At any point 170 in< x V=50(120)-8769+10000 =7231 lbs M=50(120)(x-60)-8769(x-70)+10000(x-170) At x=170 in (just to the right of D) V=7231lbs M=50(120)(170-60)-8769(170-70)+10000(170-170)= -216900 in-lb At x<200 in (just to the left of E): V=7231 lbs	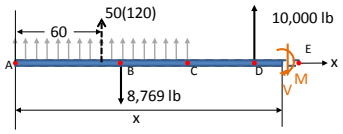
5. At end E	At x=200 in (at E):	

Copyright 2016 Lockheed Martin Corporation.
Note: The current version is always the version on the Lockheed Martin network.

	V=50(120)-8769+10000-7231= 0 lbs M=50(120)(200-60)-8769(200-70)+10000(200-170)=30 which is ~0 in-lbs. Difference is due to round-off.	

6. From the above equations, shear and bending moment diagrams can be constructed for the beam for use in the stress analysis. This is shown in the figure below. Note the magnitudes of shear and bending moment at locations A-E were developed in the above steps. Also note that R_2 is used to "close" the shear diagram at the right end.

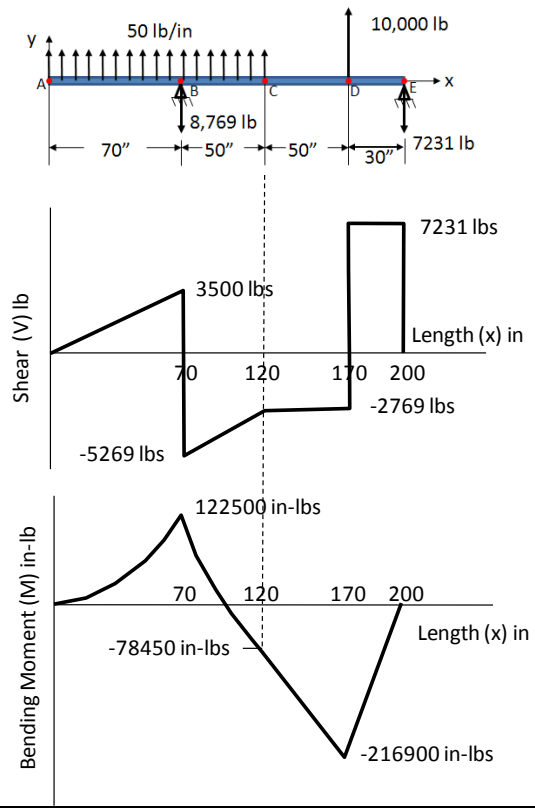

In the construction of the shear diagram, both the applied loads and the reactions are used. Examining the shear diagram shown in the example, note that for a distributed applied load, the shear load is linear with distance along the beam in the region of the applied load. Recall from the equations provided in Table 6.2.1-2, the running load is equal to the slope of the shear diagram or $w=dV/dx$. Rewritten, $dV=wdx$ or the incremental change in load is the running load times the incremental distance along the beam. From this it is seen that the incremental shear is the area under the load curve. If the applied load is a concentrated load then the shear changes at the point of application of that load but then remains constant until the next occurrence of load.

Examining the moment diagram, for a distributed applied load, the moment is a second order polynomial, as is the case in the example between $x=0$ in and $x=70$ in and between $x=70$ in and $x=120$ in. Recall from the equations provided in Table 6.2.1-2 the shear is the slope of the bending moment $V=dM/dx$. Thus, if the shear is a linear in x, the bending moment will be a second order polynomial. Also note that by rewriting the expression for shear as $dM=Vdx$, it can be seen that the incremental area under the shear curve is the incremental moment. For an applied point load, which results in a constant shear, the moment is a linear

Copyright 2016 Lockheed Martin Corporation.
Note: The current version is always the version on the Lockheed Martin network.

function of *x*. Also note that the points of maximum moment are where there are shear inflection points, *e.g.*, at *x=70* in and *x=170* in.

By understanding the interrelationship between load, shear and bending moment, it is possible to construct the free-body and the shear and bending moment diagrams without writing the equations for each segment of the beam. The first step is to determine the reactions and then the shear and moment diagrams can be constructed directly. Table 6.2.1-5 illustrates this process for the example given in Section 6.2.1.1.1.

Table 6.2.1-5 Shear and Bending Moment Diagram Construction

Step	Discussion	
	Construct Shear and Bending Moment Diagrams for Beam shown Note: Reactions at B and E have previously been determined.	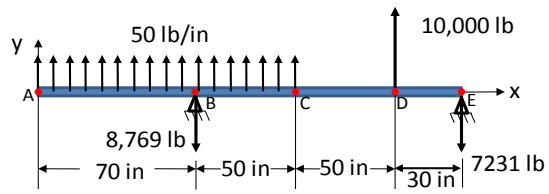
Refer to the Free-body Diagram for Construction of the Shear Diagram, Steps 1-3		
1	The slope of the shear diagram is the running load or *w=dV/dx*. A-B: The running load is 50 lb/in, thus the slope is *dV/dx=50*. The area under the load diagram is the incremental shear or *dV=wdx*. Integrating *V=wx*: A-B: At B: *dV=50(70)=3500* lbs At B, there is a point load in the negative y direction. This is added to the shear increment of 3500 lbs: *3500-8769=-5269* lbs.	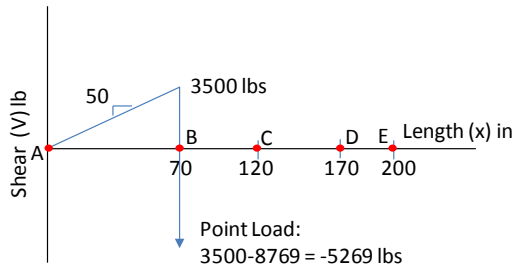
2	B-C: The running load is 50 lb/in, thus the slope *dV/dx=50*. B-C: At C: *dV=50(50)=2500* lbs The incremental load is added to the shear load at B *-5269+2500=-2769* lbs C-D: The running load is 0, thus the slope *dV/dx=0*. C-D: *dV=0* lbs	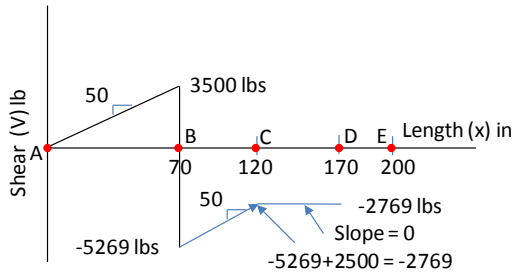
3	At D there is a point load of 10000 lbs. This is added to the shear load at D: *-2769+10000=7231* lbs D-E: The running load is 0, thus the slope *dV/dx=0*. D-E: *dV=0* lbs At E there is a reaction of -7231 lbs. This is added to the shear load at E: *7231-7231 = 0* lbs.	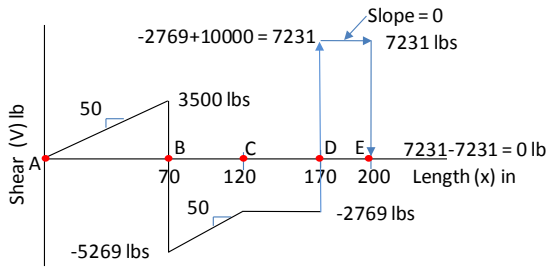
Refer to the Diagram in Step 3 for Construction of the Bending Moment Diagram, Steps 4-7		

Copyright 2016 Lockheed Martin Corporation.
Note: The current version is always the version on the Lockheed Martin network.

4	The slope of the moment diagram is the shear load or *V=dM/dx*. A-B: Because a distributed load is involved, *V=50x=dM/dx*, thus the curve for moment is a second order curve The area under the shear diagram is the incremental moment or *dM=Vdx* A-B: At B the moment is the area of the triangle 70 in long and 3500 in high or: *M=0.5(70)3500=122500* in- lbs	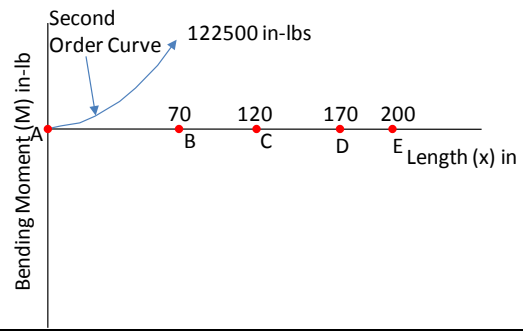
5	B-C: Because a distributed load is involved, *V=50x=dM/dx*, thus the curve for moment is a second order curve The area under the shear diagram is the sum of a rectangle and a triangle: *(120-70)(-2769)+0.5(120-70)[-5269-(-2769)]=-200950* in-lb. This is added to the moment at Point B: 122500 in-lb. So the Moment at C is *122500-200950 = -78450* in-lb.	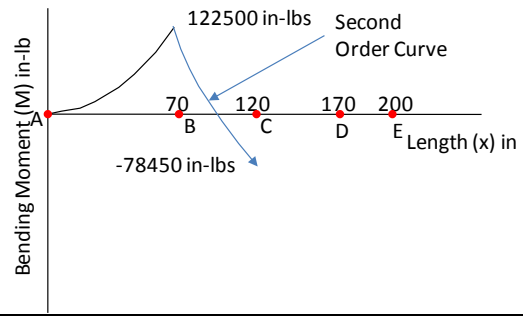
6	C-D: No distributed load is involved, *V=-2769=dM/dx*, thus the curve for moment is linear in x with a slope of -2769. The area under the shear diagram is a rectangle: *(170-120)(-2769) =-138450* in-lb. This is added to the moment at Point C: -78450 in-lb. So the Moment at D is *–78450+-138450 = -216900* in-lb.	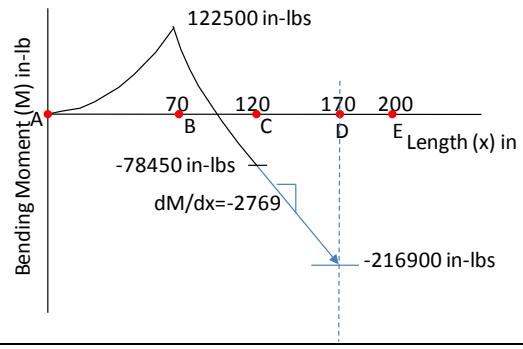
7	D-E: No distributed load is involved, *V=7231=dM/dx*, thus the curve for moment is linear in x with a slope of 7231. The area under the shear diagram is a rectangle: *(200-170)(7231) =216930* in-lb. This is added to the moment at Point D: -216900 in-lb. So the Moment at E is -*216900+216930= 30* in-lb. This should be 0, but round off results in it not being quite zero and the difference to the maximum moment is less than 0.1%.	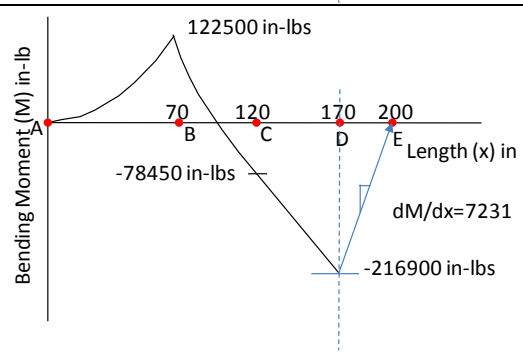

6.2.1.2 Tabulated Beam Diagrams

The tables in this section provide the solutions for some typical, commonly used beams with various end constraints. All diagrams were taken from References 6-2, 6-6 and 6-7 and cross-checked. The tables are provided as a convenience with many more solutions available in text books and literature such as References 6-2, 6-3, 6-6 and 6-7; however, the analyst should be cautious when drawing from these references as well as others as typographical errors do exist.

Copyright 2016 Lockheed Martin Corporation.
Note: The current version is always the version on the Lockheed Martin network.

For complex load conditions, it is acceptable to use multiple solutions and superimpose the results; however, this is applicable for shears and moments only and does NOT apply for maximum deflection and its location.

This summary of the provided tables is provided for reference

Table	Description
6.2.1-6	Beam Solutions: Simple-Simple
6.2.1-7	Beam Solutions: Fixed-Free (Cantilever)
6.2.1-8	Beam Solutions: Simple-Fixed
6.2.1-9	Beam Solutions: Fixed-Fixed
6.2.1-10	Beam Solutions: Guided

Copyright 2016 Lockheed Martin Corporation.
Note: The current version is always the version on the Lockheed Martin network.

Table 6.2.1-6 Beam Solutions: Simple -Simple

Table 6.2.1-6 Type of Loading	Case	Reactions	Slope and Deflections	Bending Moments and Shear
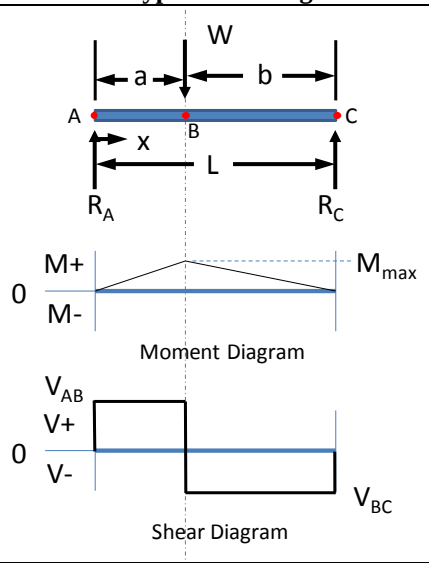	SS-1	$R_A = \frac{Wb}{L}$	$\theta_A = -\frac{1}{6}\frac{W}{EI}\left(bL - \frac{b^3}{L}\right)$ $y_{AB} = -\frac{Wbx}{6EIL}(L^2 - b^2 - x^2)$	$M_{AB} = \frac{Wbx}{L}$ $V_{AB} = W\frac{b}{L}$
		$R_C = \frac{Wa}{L}$	$\theta_C = +\frac{1}{6}\frac{W}{EI}\left(2bL + \frac{b^3}{L} - 3b^2\right)$ $y_{BC} = -\frac{Wa(L-x)}{6EIL}(2Lx - a^2 - x^2)$	$M_{BC} = \frac{Wa}{L}(L - x)$ $V_{BC} = -W\frac{a}{L}$
		E=Modulus of Elasticity (psi) I= Second Area Moment (in^4)	$y_{max} = -\frac{Wab}{27EIL}(a + 2b)\sqrt{3a(a + 2b)}$ at $x = \sqrt{\frac{1}{3}a(a + 2b)}$ when a>b	$M_{max} = W\frac{ab}{L}$

Copyright 2016 Lockheed Martin Corporation.
Note: The current version is always the version on the Lockheed Martin network.

Table 6.2.1-6 Type of Loading	Case	Reactions	Slope and Deflections	Bending Moments and Shear
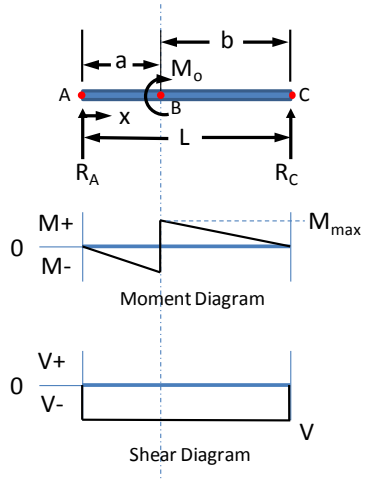 Note if a=0, this can be used for a simply supported overhanging beam	SS-2	$R_A = -\frac{M_o}{L}$ $R_C = \frac{M_o}{L}$	$y_{AB} = \frac{M_o x}{6EIL}(L^2 - 3b^2 - x^2)$ $\theta_A = -\frac{1}{6}\frac{M_o}{EI}\left(2L - 6a + \frac{3a^2}{L}\right)$	$M_{AB} = -\frac{M_o x}{L}$ $V_{AC} = \frac{M_o}{L}$
			$\theta_B = \frac{M_o}{EI}\left(a - \frac{a^2}{L} - \frac{L}{3}\right)$	
			$y_{BC} = \frac{M_o(L-x)}{6EIL}(x^2 + 3a^2 - 2Lx)$ $\theta_C = \frac{1}{6}\frac{M_o}{EI}\left(L - \frac{3a^2}{L}\right)$	$M_{BC} = M_o - \frac{M_o x}{L}$
		--	--	$M_{max+} = R_A a + M_o$ just right of B $M_{max-} = R_A a$ just left of B

Copyright 2016 Lockheed Martin Corporation.
Note: The current version is always the version on the Lockheed Martin network.

Table 6.2.1-6 Type of Loading	Case	Reactions	Slope and Deflections	Bending Moments and Shear
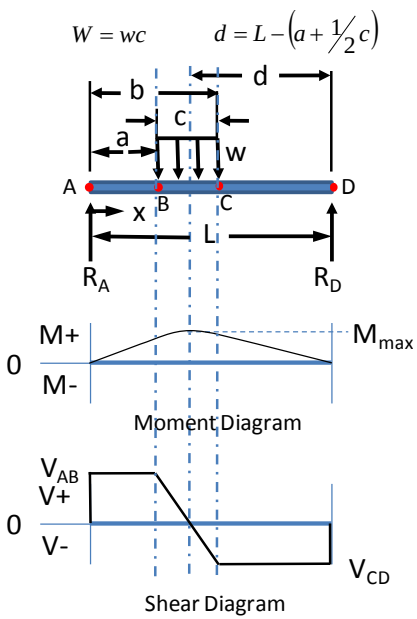	SS-3	$R_A = \frac{W}{L}d$	$\theta_A = -\frac{1}{48EI}\left[8WdL - W\left(\frac{8d^3}{L} - \frac{2bc^2}{L} + \frac{c^3}{L} + 2c^2\right)\right]$ $y_{AB} = \frac{1}{48EI}\left\{\frac{8W}{L}d(x^3 - L^2x) + Wx\left(\frac{8d^3}{L} - \frac{2bc^2}{L} + \frac{c^3}{L} + 2c^2\right)\right\}$	$M_{AB} = \frac{W}{L}dx$ $V_{AB} = \frac{W}{L}d$
			$y_{BC} = y_{AB} - \frac{1}{48EI}\left[\frac{2W(x-a)^4}{c}\right]$	$M_{BC} = \frac{W}{L}dx - \frac{W}{2c}(x-a)^2$ $V_{BC} = \frac{W}{L}d - W\left(\frac{x-a}{c}\right)$
		$R_D = \frac{W}{L}\left(a + \frac{1}{2}c\right)$	$\theta_D = \frac{1}{48EI}\left[16WdL - W\left(24d^2 - \frac{8d^3}{L} + \frac{2bc^2}{L} - \frac{c^3}{L}\right)\right]$ at D $y_{CD} = \frac{1}{48EI}\left\{\frac{8W}{L}d(x^3 - L^2x) + Wx\left(\frac{8d^3}{L} - \frac{2bc^2}{L} + \frac{c^3}{L}\right) - 8W\left[x - \left(a + \frac{1}{2}c\right)\right]^3 + W(2bc^2 - c^3)\right\}$	$M_{CD} = \frac{W}{L}dx - W\left[x - \left(a + \frac{1}{2}c\right)\right]$ $V_{CD} = \frac{W}{L}d - W$

Copyright 2016 Lockheed Martin Corporation.
Note: The current version is always the version on the Lockheed Martin network.

Table 6.2.1-6 Type of Loading	Case	Reactions	Slope and Deflections	Bending Moments and Shear
				$M_{max} = \frac{Wd}{L}\left(a + \frac{cd}{2L}\right)$ at $x = a + \frac{cd}{L}$
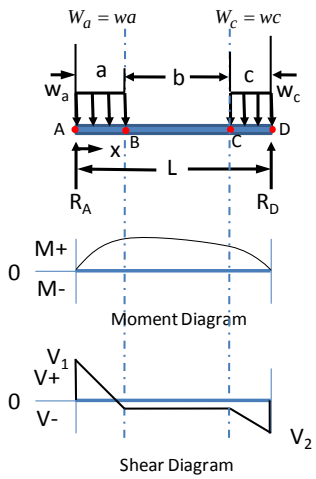	SS-4	$R_A = \frac{W_a(2L-a)+W_c c}{2L}$		$M_{AB} = R_A x - \frac{W_a x^2}{2a}$ $V_{AB} = R_A - \frac{W_a x}{a}$
				$M_{BC} = R_A x - W_a\left(x - \frac{a}{2}\right)$ $V_{BC} = R_A - W_a$
		$R_D = \frac{W_c(2L-c)+W_A a}{2L}$		$M_{CD} = R_A x - W_a\left(x - \frac{a}{2}\right) - \frac{W_c}{2c}(c - L + x)^2$ $V_{BC} = R_A - W_a - \frac{W_c}{c}(c - L + x)$
				For $R_A < W_a$ $M_{max} = \frac{aR_A^2}{2W_a}$ at $x = \frac{aR_a}{W}$

Copyright 2016 Lockheed Martin Corporation.
Note: The current version is always the version on the Lockheed Martin network.

Table 6.2.1-6 Type of Loading	Case	Reactions	Slope and Deflections	Bending Moments and Shear
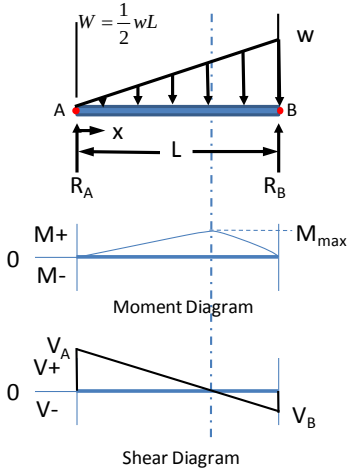	SS-5	$R_A = \frac{1}{3}W$ $R_B = \frac{2}{3}W$	$\theta_A = -\frac{7WL^2}{180EI}\ at\ A$ $\theta_B = \frac{8WL^2}{180EI}\ at\ B$ $y = -\frac{Wx}{180EIL^2}[3x^4 - 10L^2x^2 + 7L^4]$	$M_{AB} = \frac{Wx}{3}\left(1 - \frac{x^2}{L^2}\right)$ $V_{AB} = W\left(\frac{1}{3} - \frac{x^2}{L^2}\right)$
			$y_{max} = -0.01304\frac{WL^3}{EI}$ at x=0.519L	$M_{max} = 0.128WL$ at $x = L\left(\frac{\sqrt{3}}{3}\right)$
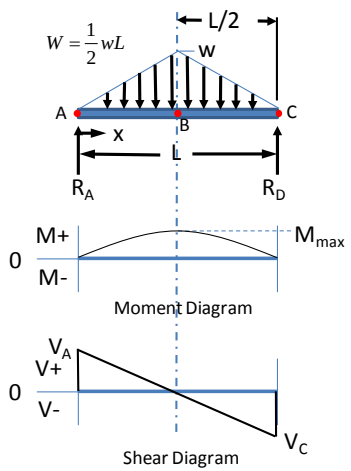	SS-6	$R_A = \frac{1}{2}W$ $R_C = \frac{1}{2}W$	$\theta_A = -\frac{5WL^2}{96EI}\ at\ A$ $\theta_B = \frac{5WL^2}{96EI}\ at\ C$ $y_{AB} = \frac{Wx}{6EIL^2}\left[\frac{L^2x^2}{2} - \frac{x^4}{5} - \frac{5L^4}{16}\right]$	$M_{AB} = Wx\left(\frac{1}{2} - \frac{2}{3}\frac{x^2}{L^2}\right)$ $V_{AB} = \frac{1}{2}W\left(1 - 4\frac{x^2}{L^2}\right)$ $V_{BC} = -\frac{1}{2}W\left(1 - 4\frac{(L-x)^2}{L^2}\right)$
			$y_{max} = -\frac{WL^3}{60EI}$ at B	$M_{max} = \frac{1}{6}WL$ at B

Copyright 2016 Lockheed Martin Corporation.
Note: The current version is always the version on the Lockheed Martin network.

Table 6.2.1-6 Type of Loading	Case	Reactions	Slope and Deflections	Bending Moments and Shear
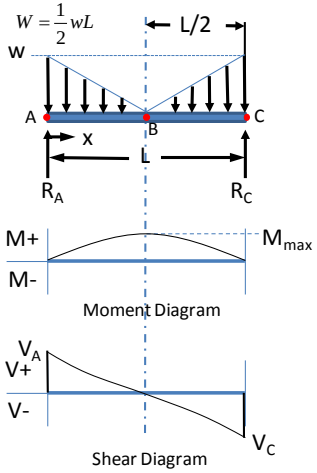	SS-7	$R_A = \frac{1}{2}W$ $R_C = \frac{1}{2}W$	$\theta_A = -\frac{WL^2}{32EI}$ at A $\theta_B = \frac{WL^2}{32EI}$ at C $y_{AB} = \frac{W}{12EI}\left[x^3 - \frac{x^4}{L} + \frac{2x^5}{5L^2} - \frac{3L^2x}{8}\right]$	$M_{AB} = Wx\left(\frac{1}{2} - \frac{x}{L} + \frac{2}{3}\frac{x^2}{L^2}\right)$ $V_{AB} = \frac{1}{2}W\left(\frac{L-2x}{L}\right)^2$ $V_{BC} = -\frac{1}{2}W\left(\frac{2x-L}{L}\right)^2$
			$y_{max} = -\frac{3WL^3}{320EI}$ at B	$M_{max} = \frac{1}{12}WL$ at B

Copyright 2016 Lockheed Martin Corporation.
Note: The current version is always the version on the Lockheed Martin network.

Table 6.2.1-7 Beam Solutions Free-Fixed (Cantilever)

Table 6.2.1-7 Type of Loading	Case	Reactions	Slope And Deflection	Bending Moments and Shears
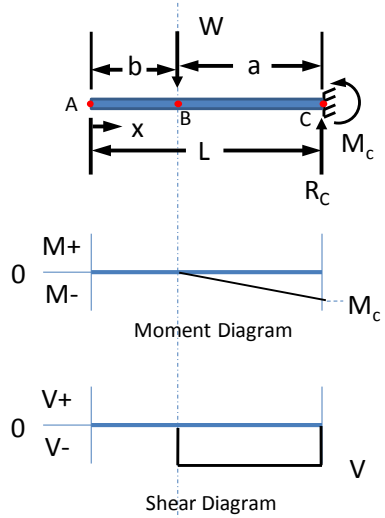	C-1		$\theta_A = \frac{1}{2}\frac{Wa^2}{EI}$ $A\ to\ B$ $y_{AB} = \frac{W}{6EI}(a^3 - 3a^2L + 3a^2x)$	$M_{AB} = 0$ $V_{AB} = 0$
		$R_C = W$ $M_c = -Wa$	$y_{BC} = -\frac{W}{6EI}[(x-b)^3 - 3a^2(x-b) + 2a^3]$	$M_{BC} = W(x-b)$ $V_{BC} = -W$
			$y_{max} = -\frac{1}{6}\frac{W}{EI}(3a^2L - a^3)$ at A	$M_{max} = -Wa$ at C
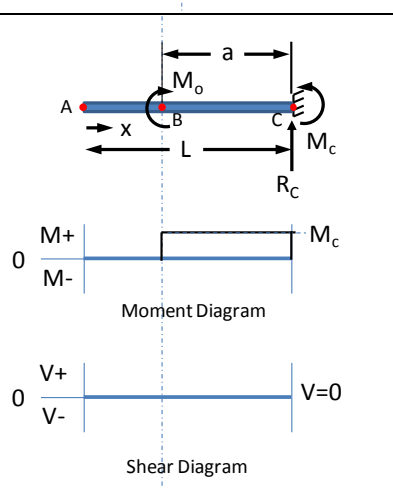	C-2	$R_C = 0$ $M_c = -M_o$	$\theta_A = -\frac{M_o a}{EI}$ $A\ to\ B$ $y_{AB} = \frac{M_o a}{EI}\left(L - \frac{a}{2} - x\right)$ $y_{BC} = \frac{1}{2}\frac{M_0}{EI}[(x-L+a)^2 - 2a(x-L+a) + a^2]$	$M_{AB} = 0$ $M_{BC} = M_o$ $V = 0$
			$y_{max} = \frac{M_o a}{EI}\left(L - \frac{1}{2}a\right)$ at A	$M_{max} = M_o$ B to C

Copyright 2016 Lockheed Martin Corporation.
Note: The current version is always the version on the Lockheed Martin network.

Table 6.2.1-7 Type of Loading	Case	Reactions	Slope And Deflection	Bending Moments and Shears
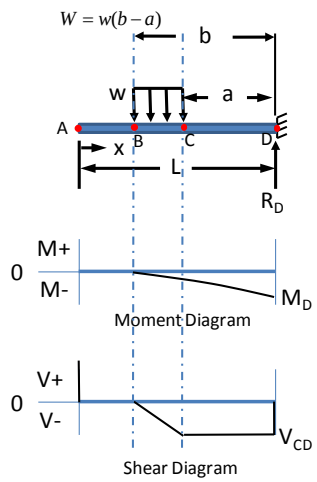	C-3	$R_D = W$ $M_D = \frac{1}{2}W(b+a)$	$\theta_{AB} = \frac{1}{6}\frac{W}{EI}(a^2+ab+b^2)$ $y_{AB} = -\frac{1}{24}\frac{W}{EI}[4(a^2+ab+b^2)(L-x)-a^3-ab^2-a^2b-b^3]$	$M_{AB} = 0$ $V_{AB} = 0$
			$y_{BC} = -\frac{1}{24}\frac{W}{EI}\left[6(a+b)(L-x)^2-4(L-x)^3+\frac{(L-x-a)^4}{(b-a)}\right]$	$M_{BC} = -\frac{1}{2}\frac{W}{(b-a)}(x-L+b)^2$ $V_{BC} = -\frac{W}{(b-a)}(x-L+b)$
			$y_{CD} = -\frac{1}{12}\frac{W}{EI}[3(a+b)(L-x)^2-2(L-x)^3]$	$M_{CD} = -\frac{1}{2}W(2x-2L+a+b)$ $V_{CD} = -W$
			$y_{max} = -\frac{1}{24}\frac{W}{EI}[4(a^2+ab+b^2)L-a^3-ab^2-a^2b-b^3]$ at A	$M_{max} = -\frac{1}{2}W(a+b)$ at D

Copyright 2016 Lockheed Martin Corporation.
Note: The current version is always the version on the Lockheed Martin network.

Table 6.2.1-7 Type of Loading	Case	Reactions	Slope And Deflection	Bending Moments and Shears
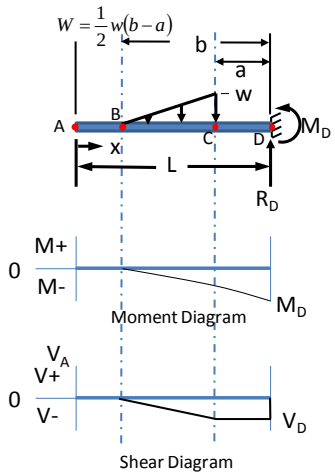	C-4	$R_D = W$ $M_D = \frac{1}{3}W(b+2a)$	$\theta_{AB} = \frac{1}{12}\frac{W}{EI}(3a^2+2ab+b^2)$ $y_{AB} = -\frac{1}{60}\frac{W}{EI}[(5b^2+10ab+15a^2)(L-x) - 4a^3-2ab^2-3a^2b-b^3]$	$M_{AB} = 0$ $V_{AB} = 0$
			$y_{BC} = -\frac{1}{60}\frac{W}{EI}\left[(20a+10b)(L-x)^2 - 10(L-x)^3 + \frac{5(L-x-a)^4}{(b-a)} - \frac{(L-x-a)^5}{(b-a)}\right]$	$M_{BC} = -\frac{1}{3}\frac{W}{(b-a)^2}(x-L+b)^3$ $V_{BC} = -\frac{W}{(b-a)^2}(x-L+b)^2$
			$y_{CD} = -\frac{1}{6}\frac{W}{EI}[(2a+b)(L-x)^2-(L-x)^3]$	$M_{CD} = -\frac{1}{3}W(3x-3L+2a+b)$ $V_{CD} = -W$
			$y_{max} = -\frac{1}{60}\frac{W}{EI}[(5b^2+10ab+15a^2)L - 4a^3 - 2ab^2-3a^2b-b^3]$ at A	$M_{max} = -\frac{1}{3}W(b+2a)$ at D

Copyright 2016 Lockheed Martin Corporation.
Note: The current version is always the version on the Lockheed Martin network.

Table 6.2.1-7 Type of Loading	Case	Reactions	Slope And Deflection	Bending Moments and Shears
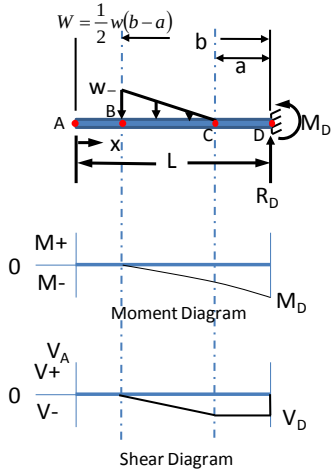	C-5	$R_D = W$ $M_D = -\frac{1}{3}W(2b + a)$	$\theta_{AB} = \frac{1}{12}\frac{W}{EI}(a^2 + 2ab + 3b^2)$ $y_{AB} = -\frac{1}{60}\frac{W}{EI}[(5a^2 + 10ab + 15b^2)(L - x) - a^3 - 3ab^2 - 2a^2b - 4b^3]$	$M_{AB} = 0$ $V_{AB} = 0$
			$y_{BC} = -\frac{1}{60}\frac{W}{EI}\left[\frac{(L - x - a)^5}{(b - a)^2} - 10(L - x)^3 + (10a + 20b)(L - x)^2\right]$	$M_{BC} = -\frac{1}{3}W\left[\frac{3(x - L + b)^2}{(b - a)} - \frac{(x - L + b)^3}{(b - a)^2}\right]$ $V_{BC} = -W\left[1 - \frac{(L - a - x)^2}{(b - a)^2}\right]$
			$y_{CD} = -\frac{1}{6}\frac{W}{EI}[(a + 2b)(L - x)^2 - (L - x)^3]$	$M_{CD} = -\frac{1}{3}W(3x - 3L + 2b + a)$ $V_{CD} = -W$
			$y_{max} = -\frac{1}{60}\frac{W}{EI}[(5a^2 + 10ab + 15b^2)L - a^3 - 2a^2b - 3ab^2 - 4b^3]$ at A	$M_{max} = -\frac{1}{3}W(2b + a)$ at D

Copyright 2016 Lockheed Martin Corporation.
Note: The current version is always the version on the Lockheed Martin network.

Table 6.2.1-8 Beam Solutions: Simple-Fixed

Table 6.2.1-8 Type of Loading	Case	Reactions	Slope And Deflection	Bending Moments and Shears
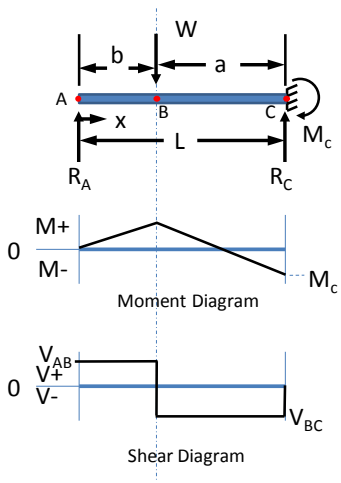	SF-1	$R_A = \frac{W}{2}\left(\frac{3a^2L - a^3}{L^3}\right)$ $R_C = W - R_A$ $M_C = \frac{W}{2}\left(\frac{a^3 + 2aL^2 - 3a^2L}{L^2}\right)$	$\theta_A = \frac{1}{4}\frac{W}{EI}\left(\frac{a^3}{L} - a^2\right)$ For x<b: $y_{AB} = \frac{1}{6EI}[R_A(x^3 - 3L^2x) + 3Wa^2x]$ For x≥b: $y_{BC} = \frac{1}{6EI}[R_A(x^3 - 3L^2x) + W(3a^2x - \{x-b\}^3)]$	$M_{AB} = R_A x$ $V_{AB} = R_A$ $M_{BC} = R_A x - W(x - L + a)$ $V_{BC} = R_A - W$
			If a<0.586L, y_{max} at $x_1 = L\sqrt{1 - \frac{2L}{3L - a}}$ If a>0.586L, y_{max} at $x_2 = \frac{L(L^2 + b^2)}{3L^2 - b^2}$ If a=0.586L, x_1=x_2= location of maximum deflection: $y_{max} = -\frac{1}{102}\frac{PL^3}{EI}$ at B	$M_{max+} = R_A(L - a)$ at B $M_{max-} = -M_c$ at C

Copyright 2016 Lockheed Martin Corporation.
Note: The current version is always the version on the Lockheed Martin network.

Table 6.2.1-8 Type of Loading	Case	Reactions	Slope And Deflection	Bending Moments and Shears
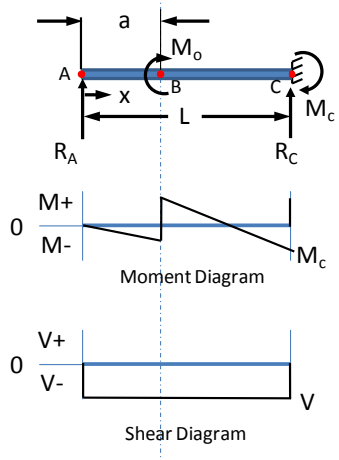	SF-2	$R_A = -\frac{3}{2}\frac{M_o}{L}\left(\frac{L^2-a^2}{L^2}\right)$ $R_C = \frac{3}{2}\frac{M_o}{L}\left(\frac{L^2-a^2}{L^2}\right)$ $M_C = \frac{1}{2}M_o\left(1-3\frac{a^2}{L^2}\right)$	$\theta_A = \frac{M_o}{EI}\left(a-\frac{1}{4}L-\frac{3}{4}\frac{a^2}{L}\right)$ $y_{AB} = \frac{M_o}{EI}\left[\frac{L^2-a^2}{4L^3}(3L^2x-x^3)-(L-a)x\right]$ $y_{BC} = \frac{M_o}{EI}\left[\frac{L^2-a^2}{4L^3}(3L^2x-x^3)-Lx+\frac{1}{2}(x^2+a^2)\right]$	$M_{AB} = R_A x$ $V_{AB} = R_A$ $M_{BC} = R_A x + M_o$ $V_{BC} = R_A$
			$M_{max+} = M_o\left[1-\frac{3a(L^2-a^2)}{2L^3}\right]$ Right of B $M_{max-} = -M_c$ at C when a<0.275L $M_{max-} = R_A a$ to left of B when a>0.275L	

Copyright 2016 Lockheed Martin Corporation.
Note: The current version is always the version on the Lockheed Martin network.

Table 6.2.1-8 Type of Loading	Case	Reactions	Slope And Deflection	Bending Moments and Shears
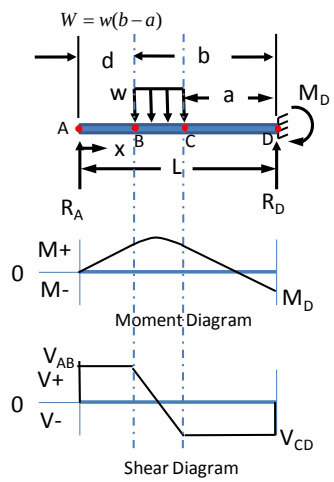	SF-3	$R_A = \frac{1}{8}\frac{W}{L^3}[4L(a^2+ab+b^2)-a^3-ab^2-a^2b-b^3]$	$\theta_A = -\frac{1}{EI}\left[\frac{1}{2}R_AL^2 - W\left(\frac{1}{2}a^2+\frac{1}{2}ac+\frac{1}{6}c^2\right)\right]$ $y_{AB} = \frac{1}{EI}\left[R_A\left(\frac{1}{6}x^3-\frac{1}{2}L^2x\right) + Wx\left(\frac{1}{2}a^2+\frac{1}{2}ac+\frac{1}{6}c^2\right)\right]$	$M_{AB} = R_Ax$ $V_{AB} = R_A$
			$y_{BC} = \frac{1}{EI}\left[R_A\left(\frac{1}{6}x^3-\frac{1}{2}L^2x\right) + Wx\left(\frac{1}{2}a^2+\frac{1}{2}ac+\frac{1}{6}c^2\right) - \frac{W}{24c}(x-d)^4\right]$	$M_{BC} = R_Ax - W\frac{(x-d)^2}{2c}$ $V_{BC} = R_A - W\left(\frac{x-d}{c}\right)$
		$R_D = W - R_A$ $M_D = -R_AL + \frac{1}{2}W(a+b)$	$y_{CD} = \frac{1}{EI}\left[R_A\left(\frac{1}{6}x^3-\frac{1}{2}L^2x+\frac{1}{3}L^3\right) + W\left\{\frac{1}{6}\left(a+\frac{1}{2}c\right)^3 - \frac{1}{2}L\left(a+\frac{1}{2}c\right)^2 - \frac{1}{6}\left(x-d-\frac{1}{2}c\right)^3 + \frac{1}{2}x\left(a+\frac{1}{2}c\right)^2\right\}\right]$	$M_{CD} = R_Ax - W\left(x-d-\frac{c}{2}\right)$ $V_{CD} = R_A - W$

Copyright 2016 Lockheed Martin Corporation.
Note: The current version is always the version on the Lockheed Martin network.

Table 6.2.1-8 Type of Loading	Case	Reactions	Slope And Deflection	Bending Moments and Shears
			$M_{max+} = R_1\left(d + \frac{1}{2}\frac{R_A}{W}c\right)$ at $x = d + \frac{R_A}{W}c$ $M_{max-} = -M_D$	
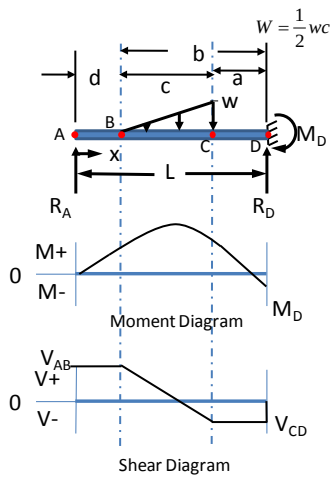	SF-4	$R_A = \frac{1}{20}\frac{W}{L^3}[(15a^2 + 10ab + 5b^2)L - 4a^3 - 2ab^2 - 3a^2b - b^3]$	$\theta_A = -\frac{1}{EI}\left[\frac{1}{2}R_A L^2 - W\left(\frac{1}{2}a^2 + \frac{1}{3}ac + \frac{1}{12}c^2\right)\right]$ $y_{AB} = \frac{1}{EI}\left[R_A\left(\frac{1}{6}x^3 - \frac{1}{2}L^2x\right) + Wx\left(\frac{1}{2}a^2 + \frac{1}{3}ac + \frac{1}{12}c^2\right)\right]$	$M_{AB} = R_A x$ $V_{AB} = R_A$
			$y_{BC} = \frac{1}{EI}\left[R_A\left(\frac{1}{6}x^3 - \frac{1}{2}L^2x\right) + Wx\left(\frac{1}{2}a^2 + \frac{1}{3}ac + \frac{1}{12}c^2\right) - \frac{W}{60c^2}(x-d)^5\right]$	$M_{BC} = R_A x - W\frac{(x-d)^3}{3c^2}$ $V_{BC} = R_A - W\frac{(x-d)^2}{c^2}$

Copyright 2016 Lockheed Martin Corporation.
Note: The current version is always the version on the Lockheed Martin network.

Table 6.2.1-8 Type of Loading	Case	Reactions	Slope And Deflection	Bending Moments and Shears
		$R_D = W - R_A$ $M_D = -R_A L + \frac{1}{3}W(2a+b)$	$y_{CD} = \frac{1}{EI}\left[R_A\left(\frac{1}{6}x^3 - \frac{1}{2}L^2x + \frac{1}{3}L^3\right) + W\left\{\frac{1}{6}\left(a+\frac{1}{3}c\right)^3 - \frac{1}{2}L\left(a+\frac{1}{3}c\right)^2 - \frac{1}{6}\left(x-d-\frac{2}{3}c\right)^3 + \frac{1}{2}x\left(a+\frac{1}{3}c\right)^2\right\}\right]$	$M_{CD} = R_A x - W\left(x - d - \frac{2}{3}c\right)$ $V_{CD} = R_A - W$
			$M_{max+} = R_A\left(d + \frac{2}{3}c\sqrt{\frac{R_A}{W}}\right)$ at $x = d + c\sqrt{\frac{R_A}{W}}$ $M_{max-} = -M_D$	
	SF-5	$R_A = \frac{1}{20}\frac{W}{L^3}[(5a^2 + 10ab + 15b^2)L - a^3 - 3ab^2 - 2a^2b - 4b^3]$	$\theta_A = -\frac{1}{EI}\left[\frac{1}{2}R_A L^2 - W\left(\frac{1}{2}a^2 + \frac{2}{3}ac + \frac{1}{4}c^2\right)\right]$ $y_{AB} = \frac{1}{EI}\left[R_A\left(\frac{1}{6}x^3 - \frac{1}{2}L^2x\right) + Wx\left(\frac{1}{2}a^2 + \frac{2}{3}ac + \frac{1}{4}c^2\right)\right]$	$M_{AB} = R_A x$ $V_{AB} = R_A$

Copyright 2016 Lockheed Martin Corporation.
Note: The current version is always the version on the Lockheed Martin network.

Table 6.2.1-8 Type of Loading	Case	Reactions	Slope And Deflection	Bending Moments and Shears
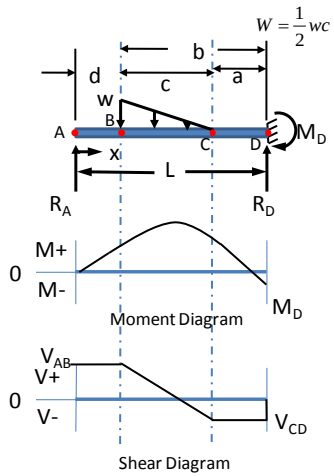			$y_{BC} = \frac{1}{EI}\left[R_A\left(\frac{1}{6}x^3 - \frac{1}{2}L^2x\right) + W\left\{\frac{1}{60}\frac{(x-d)^5}{c^2} - \frac{1}{12}\frac{(x-d)^4}{c} + \left(\frac{1}{2}a^2 + \frac{2}{3}ac + \frac{1}{4}c^2\right)x\right\}\right]$	$M_{BC} = R_Ax - W\frac{(x-d)^2}{c} + W\frac{(x-d)^3}{3c^2}$ $V_{BC} = R_A - W\frac{2(x-d)}{c} + W\frac{(x-d)^2}{c^2}$
		$R_D = W - R_A$ $M_D = -R_AL + \frac{1}{3}W(a+2b)$	$y_{CD} = \frac{1}{EI}\left[R_A\left(\frac{1}{6}x^3 - \frac{1}{2}L^2x + \frac{1}{3}L^3\right) - \frac{1}{2}W(L-x)^2\left\{\left(a + \frac{2}{3}c\right) - \frac{(L-x)}{3}\right\}\right]$	$M_{CD} = R_Ax - W\left(x - d - \frac{1}{3}c\right)$ $V_{CD} = R_A - W$
		$M_{max+} = R_A\left(d + c - c\sqrt{1 - \frac{R_A}{W}}\right) - \frac{1}{3}Wc\left(1 - \sqrt{1 - \frac{R_A}{W}}\right)^2\left(2 + \sqrt{1 - \frac{R_A}{W}}\right)$ at $x = d + c\left(1 - \sqrt{\frac{R_A}{W}}\right)$ $M_{max-} = -M_D$		

Table 6.2.1-9 Beam Solutions: Fixed-Fixed

Copyright 2016 Lockheed Martin Corporation.
Note: The current version is always the version on the Lockheed Martin network.

Table 6.2.1-9 Type of Loading	Case	Reactions	Deflection	Bending Moments and Shears
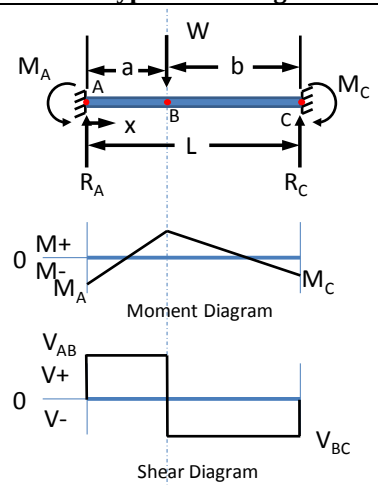	FF-1	$R_A = \frac{Pb^2}{L^3}(3a+b)$ $M_A = P\frac{ab^2}{L^2}$ $R_B = \frac{Pa^2}{L^3}(3b+a)$ $M_B = P\frac{a^2b}{L^2}$	$y_{AB} = \frac{1}{6}\frac{Pb^2x^2}{EIL^3}(3ax+bx-3aL)$ $y_{BC} = \frac{1}{6}\frac{Pa^2(L-x)^2}{EIL^3}[(3b+a)(L-x)-3bL]$	$M_{AB} = -P\frac{ab^2}{L^2} + R_A x$ $V_{AB} = R_A$ $M_{BC} = -P\frac{ab^2}{L^2} + R_A x - P(x-a)$ $V_{BC} = R_A - P$
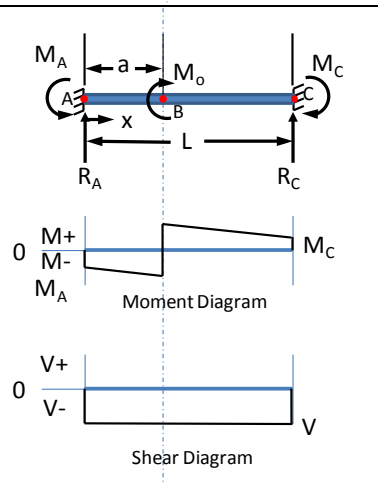	FF-2	$R_A = -6\frac{M_o}{L^3}(aL-a^2)$ $M_A = -\frac{M_o}{L^2}(4La-3a^2-L^2)$	$y_{AB} = -\frac{1}{6EI}(3M_Ax^2 - R_Ax^3)$	$M_{AB} = -M_A + R_A x$ $V_{AC} = R_A$
		$R_C = 6\frac{M_o}{L^3}(aL-a^2)$ $M_C = \frac{M_o}{L^2}(2La-3a^2)$	$y_{BC} = \frac{1}{6EI}[(M_o-M_A)(3x^2-6Lx+3L^2) - R_A(3L^2x-x^3-2L^3)]$	$M_{BC} = -M_A + R_A x + M_o$

Copyright 2016 Lockheed Martin Corporation.
Note: The current version is always the version on the Lockheed Martin network.

Table 6.2.1-9 Type of Loading	Case	Reactions	Deflection	Bending Moments and Shears
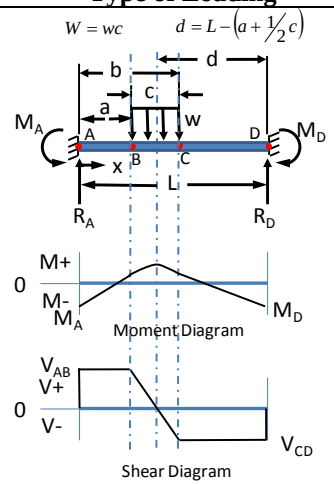	FF-3	$R_A = \frac{1}{4}\frac{W}{L^2}\left(12d^2 - 8\frac{d^3}{L} + 2\frac{bc^2}{L} - \frac{c^3}{L} - c^2\right)$ $M_A = -\frac{1}{24}\frac{W}{L}\left(24\frac{d^3}{L} - 6\frac{bc^2}{L} + 3\frac{c^3}{L} + 4c^2 - 24d^2\right)$	$y_{AB} = \frac{1}{6EI}(R_A x^3 - 3M_A x^2)$	$M_{AB} = -M_A + R_A x$ $V_{AB} = R_A$
			$y_{BC} = \frac{1}{6EI}\left[R_A x^3 - 3M_A x^2 - \frac{1}{4}W\frac{(x-a)^4}{c}\right]$	$M_{BC} = -M_A + R_A x - \frac{1}{2}W\frac{(x-a)^2}{c}$ $V_{BC} = R_A - W\frac{(x-a)}{c}$
		$R_D = W - R_A$ $M_D = \frac{1}{24}\frac{W}{L}\left(24\frac{d^3}{L} - 6\frac{bc^2}{L} + 3\frac{c^3}{L} + 2c^2 - 48d^2 + 24dL\right)$	$y_{CD} = \frac{1}{6EI}[R_D(L-x)^3 - 3M_D(L-x)^2]$	$M_{CD} = -M_A + R_A x - W(x - L + d)$ $V_{CD} = R_A - W$

Copyright 2016 Lockheed Martin Corporation.
Note: The current version is always the version on the Lockheed Martin network.

Table 6.2.1-9 Type of Loading	Case	Reactions	Deflection	Bending Moments and Shears
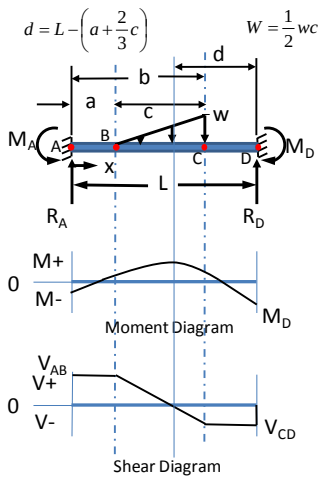	FF-4	$R_A = \frac{W}{L^2}\left(3d^2 - \frac{1}{6}c^2 + \frac{1}{3}\frac{bc^2}{L} - \frac{17}{135}\frac{c^3}{L} - 2\frac{d^3}{L}\right)$ $M_A = -\frac{W}{L}\left(\frac{d^3}{L} - \frac{1}{6}\frac{bc^2}{L} + \frac{51}{810}\frac{c^3}{L} + \frac{1}{9}c^2 - d^2\right)$	$y_{AB} = \frac{1}{6EI}(R_A x^3 - 3M_A x^2)$	$M_{AB} = -M_A + R_A x$ $V_{AB} = R_A$
			$y_{BC} = \frac{1}{6EI}\left[R_A x^3 - 3M_A x^2 - \frac{1}{10}W\frac{(x-a)^5}{c^2}\right]$	$M_{BC} = -M_A + R_A x - \frac{1}{3}W\frac{(x-a)^3}{c^2}$ $V_{BC} = R_A - W\frac{(x-a)^2}{c^2}$
		$R_D = W - R_A$ $M_D = \frac{W}{L}\left(\frac{d^3}{L} - \frac{1}{6}\frac{bc^2}{L} + \frac{51}{810}\frac{c^3}{L} + \frac{1}{18}c^2 - 2d^2 + dL\right)$	$y_{CD} = \frac{1}{6EI}[R_A(x^3 - 3L^2x + 2L^3) - 3M_A(L-x)^2 + W\{3d^2x + d^3 - 3d^2L - (x-L+d)^3\}]$	$M_{CD} = -M_A + R_A x - W(x - L + d)$ $V_{CD} = R_A - W$

Copyright 2016 Lockheed Martin Corporation.
Note: The current version is always the version on the Lockheed Martin network.

Table 6.2.1-10 Beam Solutions: Guided

Table 6.2-10 Type of Loading	Case	Reactions	Deflections	Bending Moments and Shears
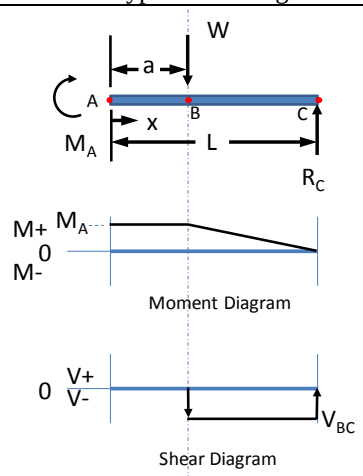	G-1	$R_c=W$ $M_A=W(L-a)$ $M_C=0$	$\theta_A=0$ $\theta_C=\frac{W}{2EI}(L^2-a^2)$ $y_A=-\frac{W(L-a)}{6EI}(2L^2+2La-a^2)$ $y_C=0$	Maximum moment occurs for 0<a<x: $M_{max}=M_A$ If a=0, maximum possible value: $M_{max}=WL$ $V_{AB}=0$ $V_{BC}=-W$
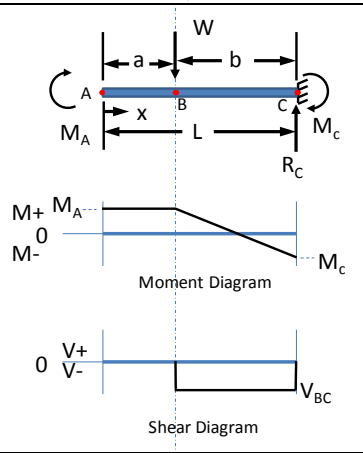	G-2	$R_A=0$ $M_A=\frac{W(L-a)^2}{2L}$ $R_c=W$ $M_C=-\frac{W(L^2-a^2)}{2L}$	$\theta_A=0$ $\theta_C=0$ $y_A=-\frac{W}{12EI}(L-a)^2(L+2a)$ $y_C=0$	$M_{max+}=M_A$ $M_{max-}=M_C$ Maximum Possible value, a=0: $M_{max+}=\frac{WL}{2}$ $M_{max-}=-\frac{WL}{2}$

Copyright 2016 Lockheed Martin Corporation.
Note: The current version is always the version on the Lockheed Martin network.

Table 6.2-10 Type of Loading	Case	Reactions	Deflections	Bending Moments and Shears
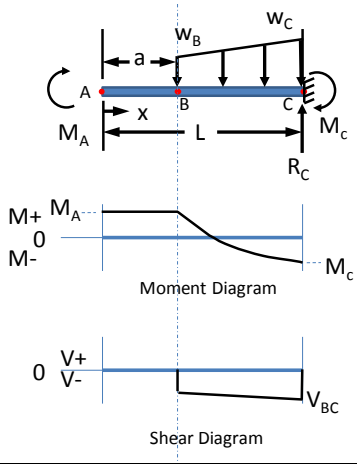	G-3	$R_A=0$ $M_A = \frac{W_a}{6L}(L-a)^3 + \frac{w_C - w_a}{24L}(L-a)^3$ $R_C = \frac{w_a + w_c}{2}(L-a)$ $M_C = -\frac{W_a}{6L}(L-a)^2(2L+a) - \frac{w_C - w_a}{24L}(L-a)^2(3L+a)$	$\theta_A=0$ $\theta_C=0$ $y_A = \frac{w_a}{24EI}(L-a)^3(L+a) - \frac{w_c - w_a}{240EI}(L-a)^3(3L+2a)$ $y_C=0$	For a=0, $w_c=w_a$: Uniform Loading $M_{max+} = M_A = \frac{w_a L^2}{6}$ $M_{max-} = M_C = -\frac{w_a L^2}{3}$

Copyright 2016 Lockheed Martin Corporation.
Note: The current version is always the version on the Lockheed Martin network.

6.2.2 Stress Analysis of Beams

This section addresses the stress analysis of compact homogenous beams undergoing pure elastic bending. There are various assumptions which underlie the bending of beams which are shown in Table 6.2.1-1.

6.2.2.1 Simple Bending

Simple bending is the bending of a beam in a plane of symmetry. Once the bending moments internal to the beam have been determined through the use of a free-body diagram, the bending stress in a beam can be calculated as

$$f_b = \frac{my}{I} \qquad \textbf{Equation 6.2.2-1}$$

where
m is the applied bending moment (in-lb)
y is the distance from the bending neutral axis to the fiber being analyzed (in)
I is the moment of inertia of the cross-section about the bending neutral axis (in^4)

The maximum bending stress occurs at the fiber located the furthest distance from the bending neutral axis and is given by

$$f_b = \frac{mc}{I} \qquad \textbf{Equation 6.2.2-2}$$

where
m is the applied bending moment (in-lb)
c is the distance from the bending neutral axis to the extreme fiber (in)
I is the moment of inertia of the cross-section about the bending neutral axis (in^4)

Reiterating, from Table 6.2.1-1 the above equations are applicable when plane sections remain plane, the material remains linear-elastic and stress is proportional to strain.

In general, calculation of margins of safety associated with bending are written by determining an allowable bending moment based on the cross-section, the extreme fiber location and the modulus of rupture rather than by use of applied and allowable stresses. The use of moments rather than stresses is because bending of sections above the proportional limit exhibits nonlinear behavior. Section 6.3 discusses the calculation and correct use of the modulus of rupture.

Some customers or programs prefer to limit the use of plasticity; in that case, the allowable moment can be calculated using the ultimate tensile strength of the material from the following equation

$$M_{all} = \frac{F_{tu} I}{y} \qquad \textbf{Equation 6.2.2-3}$$

where
F_{tu} is the ultimate tensile strength of the material (psi)
I is the moment of inertia (in^4)
y is the distance from the bending neutral axis to the fiber being analyzed (in).

When the location being examined is the extreme fiber, then $y=c$. Note that it is important to determine the bending neutral axis. If the bending is below the proportional limit this is the same as the centroid of the part.

Copyright 2016 Lockheed Martin Corporation.
Note: The current version is always the version on the Lockheed Martin network.

The margin of safety can be determined from

$$M.S. = \frac{M_{allow}}{m} - 1 \qquad \textbf{Equation 6.2.2-4}$$

where
M_{allow} is the allowable bending moment (in-lb)
m is the applied moment (in-lb)

It has been found through testing that beams fail at a moment higher than what would be predicted using Equation 6.2.2-3. The stresses in the cross-section are no longer proportional to strain and there is a redistribution of stress through plastic deformation. This capability is discussed in detail in Section 6.3.

6.2.2.2 Complex Bending

Complex bending occurs when the bending moment acts about an axis inclined with respect to the principal axes. In such cases, the bending stresses must be calculated about each axis separately and superimposed. This behavior can occur in symmetric sections if the loading is applied about an axis rotated relative to the principal axes which are also the axes of symmetry. However, it most often occurs in unsymmetrical sections where the principal axes are often rotated relative to the orientation of the beam in the aircraft. In either case, the neutral axis does not generally coincide with the axis of bending; however, if only bending loads are present, the neutral axis will pass through the centroid.

The first case, a symmetrical section where the loading is applied about an axis rotated relative to the axes of symmetry, is illustrated in Figure 6.2.2-1. The applied load at angle θ to the principal axes results in a moment about an axis which is also at an angle, θ, relative to the principal axes. The forces and moments about the principal axes can be determined through a rotation of forces and moments through the angle θ.

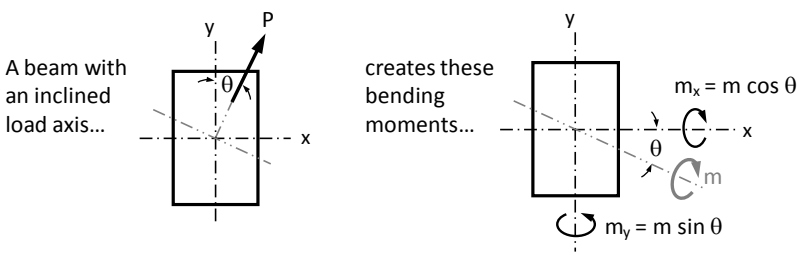

Figure 6.2.2-1 Bending Moments for a Symmetric Section with an Inclined Load Axis

The bending stresses resulting from this type of loading are given by

$$f_{b-x} = -\frac{m_x y}{I_x}$$

$$f_{b-y} = -\frac{m_y x}{I_y}$$

where
m_x and m_y are the bending moment about the x and y axes, respectively (in-lbs)
x, y are the distances from the neutral axis to the fiber at the point of analysis (in)
I_x, I_y are the moments of inertia for the section about the x and y axes, respectively (in^4)

Note that for a symmetric section, the *x* and *y* axes are the principal axes. By the sign convention used in this manual and shown in Figure 6.2.1-1, a positive moment results in a compression stress on the upper fibers (+*y*) of the beam. The stresses are illustrated in Figure 6.2.2-2.

Copyright 2016 Lockheed Martin Corporation.
Note: The current version is always the version on the Lockheed Martin network.

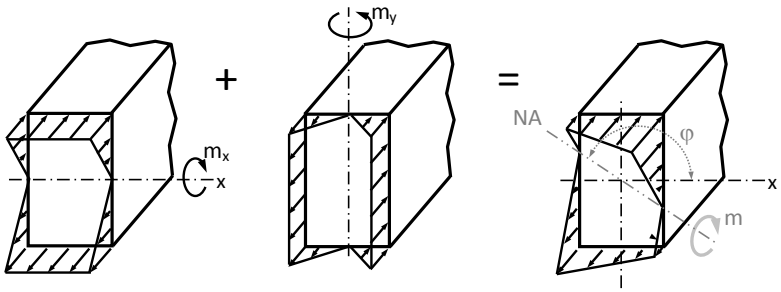

Figure 6.2.2-2 Resultant Bending Stresses for a Symmetric Section with an Inclined Load Axis

The stresses may be combined by linear superposition in the elastic range at each fiber. The total stress is given as

$$f_b = -\frac{m_x y}{I_x} - \frac{m_y x}{I_y} \qquad \textbf{Equation 6.2.2-5}$$

For bending in the plastic range, refer to Section 6.3. The angle between the principal axes and the neutral axis is given by

$$\tan\varphi = -\frac{m_y/I_y}{m_x/I_x} \qquad \textbf{Equation 6.2.2-6}$$

Note that the angle the neutral axis makes with the principal axis is not equal to the bending axis angle, θ, unless $I_x = I_y$.

For the more general case where there is no axis of symmetry, the bending stress equation includes a product of inertia term which may be positive, negative or zero. The general form of the elastic bending stress equation is given by

$$f = \frac{m_x I_{xy} - m_y I_x}{I_x I_y - I_{xy}^2} x + \frac{m_y I_{xy} - m_x I_y}{I_x I_y - I_{xy}^2} y \qquad \textbf{Equation 6.2.2-7}$$

where
I_{xy} is the product of inertia (in^4), reference Equation 4.2.1-10, Section 4
x, y are the distances from the analysis point to the x and y axes of the cross section (in)

The sign convention is such that m_x and m_y are positive when they produce compression stress in the upper right hand quadrant, *i.e.*, the first quadrant of the section area where x and y are positive. The product of inertia, I_{xy}, is equal to zero if there is an axis of symmetry and it can be seen how Equation 6.2.2-5 results from Equation 6.2.2-7 for symmetric sections. Figure 6.2.2-3 shows the general case.

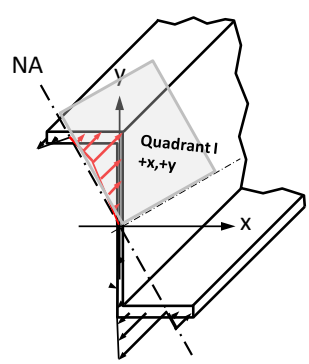

Figure 6.2.2-3 General Bending Case

Copyright 2016 Lockheed Martin Corporation.
Note: The current version is always the version on the Lockheed Martin network.

Section 6.3.5 provides the approach for calculation of the margin of safety in complex bending using applied and allowable moments. As with the simple bending discussion of Section 6.2.2.1, the allowable moments are generally calculated using the modulus of rupture of the material and the moment of inertia and fiber distance about the appropriate axis. If program or customer guidance dictates a limitation on the amount of allowed plasticity, F_{tu} may be used instead of the modulus of rupture; however, testing of beams has shown that the beam will fail at a higher moment than would be predicted using F_{tu}.

6.2.2.3 Unsymmetrical Beams Restrained in Bending

The beam sections discussed in Section 6.2.2.2 were free to deflect in any plane under the applied loads. Often, in aircraft structure, unsymmetrical beams are attached to webs or skins such that the deflection is restrained along one axis. This is illustrated in Figure 6.2.2-4 and has the effect of forcing the bending to be about an axis parallel to the web or skin. The bending stress then can be calculated using the methods outlined in Section 6.2.2.1.

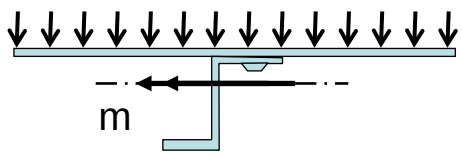

Figure 6.2.2-4 Unsymmetrical Beam Restrained in Bending

6.2.2.4 Combined Stresses

As shown in the previous section, bending stresses at a particular location in the cross section can be combined directly if the stresses are in the elastic range. From a practical engineering standpoint, this is considered to be at or below the yield point of the material although plastic strains do start developing above the proportional limit of the material. If tension or compression stresses due to axial load are also present, they may be combined directly with the bending stresses using the appropriate sign. If other stresses, such as shear stresses are also present then they can be combined with the bending and axial stress using the interaction equations described in Section 2.5.

If the bending stresses exceed the yield strength of the material, then Section 6.3 on inelastic bending should be consulted and the interaction equations of Sections 6.3.6 used for any combined margins of safety.

6.2.3 Continuous Beam Analysis

Continuous beams are beams that have more than one span, with three or more supports. This results in a beam for which the equilibrium equations have more unknowns than independent variables, requiring the analyst to supplement the equilibrium equations with a deflection condition or to use some other means of analyzing the beam. With the ease of access to finite element solvers, that is generally the analysis approach of choice.

The two most widely used approaches for the hand solution of the continuous beam problem are the method of moment distribution, also known as the Hardy Cross method and the three-moment method. Reference 6-9, Chapter IV provides an excellent discussion of both of these methods with example problems. Reference 6-2 Section 4.2 also provides an abbreviated discussion of these methods.

Copyright 2016 Lockheed Martin Corporation.
Note: The current version is always the version on the Lockheed Martin network.

6.2.4 Beams on an Elastic Foundation

Sometimes in aerospace design, it is necessary or desirable to treat the supporting structure for a member as an elastic support to more accurately reflect boundary stiffness. This might be true for the bending of frames supported by wing skins or for reinforcing rings around openings. This approach can also be used for analyzing sandwich panel face sheets when supported by core material. The stiffness of the beam should be significantly larger than that of the foundation so that contact stresses do not affect the analysis. The elastic foundation is effective in both tension and compression as though discrete springs were attached to the beam. Also the theory is no longer applicable if either the foundation or the beam is operating in the plastic region. The general case for a beam on an elastic foundation is shown in Figure 6.2.4-1.

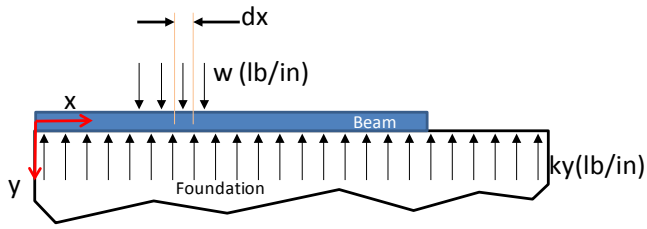

Figure 6.2.4-1 Beam on an Elastic Foundation

The magnitude of the reaction offered by the foundation is a variable proportional to the deflection. The reaction per unit length is given as ky_m where k is the modulus representing the foundation stiffness and y is the deformation. The usual equilibrium equations, summation of forces equal zero and summation of moments equal zero, apply, but they are not sufficient to determine the distribution of the reaction making the problem statically indeterminate. Since the deformation, y, is proportional to the load, superposition is possible.

Structural analysis often uses the parameter k in lb/in to represent stiffness of discrete supports. This parameter is defined as the applied force divided by the resulting structural displacement. If discrete supports comprise the "continuous elastic foundation" then the foundation modulus can be obtained by determining the spring stiffness of each support and dividing by their spacing. However, there is a limit to how widely spaced the supports can be and still behave in a manner consistent with the theory. It has been observed that if there are 4 concentrated reaction forces in every half wavelength, λ, of the deflected beam, then the solution provided by the equations of Table 6.2.4-1, below, are adequate. Reference 6-10 indicates that if the support spacing is $\pi/(4\lambda)$ or less, the error in the computed bending moments, shears and deflections is negligible. The equation for λ is given below as Equation 6.2.4-3.

The general equation for the deflection of a beam in bending as a function of external forces is taken from Table 6.2.1-2 and is given as

$$w = EI\frac{d^4y}{dx^4}$$

Where
E is the young's modulus of the beam under analysis (psi)
I is the moment of inertia of the beam cross-section about the axis of bending (in^4)
w is the external forces (lb)
y is the deformation (in)
x is the location along the beam (in)

Referring to Figure 6.2.4-1 in the area where w is 0 (the unloaded portion), the external force on the beam is $-ky$ while in the area where $w \neq 0$, the external force is the sum of the applied running load and the foundation restoring force and is given as $w-ky$ (the loaded portion). Thus, equations for the deflection of the beam as a function of external forces are given by

Copyright 2016 Lockheed Martin Corporation.
Note: The current version is always the version on the Lockheed Martin network.

$$EI\frac{d^4y}{dx^4} = -ky$$ Unloaded Portion **Equation 6.2.4-1**

$$EI\frac{d^4y}{dx^4} = w - ky$$ Loaded Portion **Equation 6.2.4-2**

Where
k is the foundation modulus (psi)
w is the applied running load on the beam (lb/in)

The dimensionless parameter λL represents the magnitude of the beam's elastic curvature and defines the rate at which the effect of the loading force dies out in the form of a damped wave along the length of the beam, L. It is a function of the stiffness of the beam as well as the stiffness of the foundation.

The parameter λ is called the characteristic wavelength of the system, its units are 1/in and it is given by

$$\lambda = \sqrt[4]{\frac{k}{4EI}}$$ **Equation 6.2.4-3**

Where
k is the foundation modulus (psi)
E is the beam modulus (psi)
I is the beam moment of inertia (in^4)

Based on the value of λL the beam solutions can be categorized into 3 groups.

- If $\lambda L<\pi/4$, for most analysis situations the bending deformation of the beam can be neglected since it will be negligible and the beam can be treated as rigid and the problem becomes statically determinate. A straight line distribution of reaction forces from the elastic supports is assumed and the equations of equilibrium can be applied to calculate the rigid beam deflection.
- If $\pi/4\leq\lambda L\leq\pi$, the solutions involve a complex combination of trigonometric and hyperbolic functions. These are the ones where a finite element solution can prove the least time consuming approach.
- If $\lambda L> \pi$, the beams are very long in comparison to their width and depth. The ends are so remote from the loading that the assumption can be made that the deflection, slope, shear and moments at the ends are zero. Semi-infinite beams also fall into this category, except that the unlimited extension applies only in one direction with one finite end.

For the last category, where $\lambda L> \pi$, the solution to Equations 6.2.4.1 and 6.2.4.2 is given by

$$y = e^{\lambda x}(A\cos\lambda x + B\sin\lambda x) + e^{-\lambda x}(C\cos\lambda x + D\sin\lambda x)$$ **Equation 6.2.4-4**

Where
A, B, C, and D are constants of integration determined by the boundary conditions of the problem
λ is given by Equation 6.2.4-3

Closed form solutions are provided for various geometries in Table 6.2.4-1, taken from References 6-7 and 6-10. The principal of superposition applies for combining load cases.

The equations of Table 6.2.4-1 require positive x, so when solving for values x to the left of the coordinate system origin y, θ, V and M must be obtained using the symmetry and anti-symmetry conditions, thus

- $y(-x) = y(x)$
- $M(-x)=M(x)$
- $\theta(-x) = -\theta(x)$
- $V(-x) = -V(x)$.

This will be illustrated in an example problem, Section 6.2.4.1.

Copyright 2016 Lockheed Martin Corporation.
Note: The current version is always the version on the Lockheed Martin network.

Table 6.2.4-1 Infinite and Semi-infinite Beams on an Elastic Foundation

Case	Geometry	Deflection and Slope	Moment and Shear
EF-1 Infinite	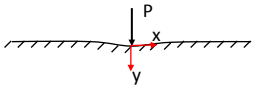 Single Concentrated Load	$y = \frac{P\lambda}{2k} A_{\lambda x}$	$M = \frac{P}{4\lambda} C_{\lambda x}$
		$\theta = -\frac{P\lambda^2}{k} B_{\lambda x}$	$V = -\frac{P}{2} D_{\lambda x}$
EF-2 Infinite	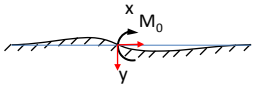 Concentrated Moment	$y = \frac{M_o\lambda^2}{k} B_{\lambda x}$	$M = \frac{M_o}{2} D_{\lambda x}$
		$\theta = \frac{M_o\lambda^2}{k} C_{\lambda x}$	$V = -\frac{M_o\lambda}{2} A_{\lambda x}$
EF-3 Infinite	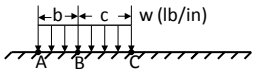 Distributed Load	$y_B = \frac{w}{2k}(2 - D_{\lambda b} - D_{\lambda c})$	$M_B = \frac{w}{4\lambda^2}(B_{\lambda b} + B_{\lambda c})$
		$\theta_B = \frac{w\lambda}{2k}(A_{\lambda b} - A_{\lambda c})$	$V_B = \frac{w}{4\lambda}(C_{\lambda b} - C_{\lambda c})$
EF-4 Semi-infinite	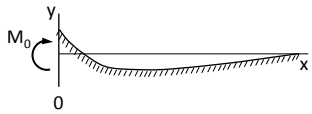 Applied Moment	$y = -\frac{2M_0\lambda^2}{k} C_{\lambda x}$	$M = M_0 A_{\lambda x}$
		$\theta = \frac{4M_0\lambda^3}{k} D_{\lambda x}$	$V = -2M_0\lambda B_{\lambda x}$
EF-5 Semi-infinite	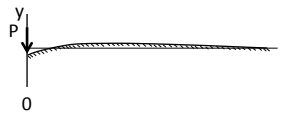	$y = \frac{2P\lambda}{k} D_{\lambda x}$	$M = -\frac{P}{\lambda} B_{\lambda x}$
		$\theta = \frac{-2P\lambda^2}{k} A_{\lambda x}$	$V = -PC_{\lambda x}$

Where
λ is given by Equation 6.2.4-3
$A_{\lambda x} = e^{-\lambda x}(\cos \lambda x + \sin \lambda x)$ (radians)
$B_{\lambda x} = e^{-\lambda x}(\sin \lambda x)$ (radians)
$C_{\lambda x} = e^{-\lambda x}(\cos \lambda x - \sin \lambda x)$ (radians)
$D_{\lambda x} = e^{-\lambda x}(\cos \lambda x)$ (radians)
Note in Case EF-3, lengths b and c are used for x and deflection, Moment and Shear are at Point B.

6.2.4.1 Beam on an Elastic Foundation Example

Given: A 96 in long 7075-T6511 extruded tee (I = 0.0375 in^4) is mounted on the floor of a fuselage to provide attachments and support to equipment consoles. The floor is supported at 8 in. intervals by under floor frames. It is estimated that the under floor frames have a spring stiffness of 1150 lb/in. The console support is located at 45 in from the left end of the extruded tee and applies a 200 lb load.
Tee Material: 7075-T6511 E = 10.4x10^6 psi

Idealize the beam as a beam on an elastic foundation and determine the deflection, shear and bending moment diagrams.

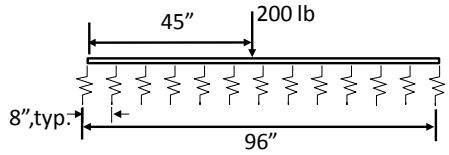

Calculate foundation modulus	k=K/L_{stiff}=1150/8=143.75 psi	k=143.75 psi
Calculate λ	$\lambda = \sqrt[4]{\frac{k}{4EI}} = \sqrt[4]{\frac{143.75}{4(10.4x10^6)(0.0375)}} = 0.098$	λ=0.098 1/in

Copyright 2016 Lockheed Martin Corporation.
Note: The current version is always the version on the Lockheed Martin network.

Verify "infinite beam" applies	λL=(0.098)(96) = 9.408 > π	Infinite Beam
Calculate Beam Inflection Points: π/λ, π/(2λ), π/(4λ) and 3π/(4λ)	π/λ= π/0.098=32.06 (Theta goes to zero) π/(2λ)= π/(2•0.098)=16.03 (Shear goes to zero) π/(4λ)= π/(2•0.098)=8.02 (Maximum support spacing, moment goes to zero) 3π/(4λ)=3π/(4•0.098)=24.05 (Deflection goes to zero)	π/λ=32.06 π/(2λ)= 16.03 π/(4λ)= 8.02 3π/(4λ)= 24.05
Check continuous elastic foundation assumption	Is support spacing ≤ π/(4λ) 8.00≤8.02	Individual supports will behave as a "continuous elastic foundation"

Set up table to solve for beam deflections, rotations, shears and moments
x is the distance from the left end.
x' is the distance from the point of applied load.

From Table 6.2.4-1, Case EF-1 (x is always positive)

$A_{\lambda x} = e^{-\lambda x}(\cos\lambda x + \sin\lambda x)$ $B_{\lambda x} = e^{-\lambda x}(\sin\lambda x)$ $C_{\lambda x} = e^{-\lambda x}(\cos\lambda x - \sin\lambda x)$ $D_{\lambda x} = e^{-\lambda x}(\cos\lambda x)$	$y = \frac{P\lambda}{2k} A_{\lambda x}$	$M = \frac{P}{4\lambda} C_{\lambda x}$
	For x at and to right of load $\theta = -\frac{P\lambda^2}{k} B_{\lambda x}$	For x at and to right of load $V = -\frac{P}{2} D_{\lambda x}$
	For x to left of load: $\theta = \frac{P\lambda^2}{k} B_{\lambda x}$	For x to left of load: $V = \frac{P}{2} D_{\lambda x}$

x	x'	$e^{-\lambda x'}$	cos(λx')	sin(λx')	$A_{\lambda x'}$	y	$B_{\lambda x'}$	θ	$C_{\lambda x'}$	M	$D_{\lambda x'}$	V
(in)	(in)					in		rad		in-lb		lb
0	45	0.0122	-0.2978	-0.9546	-0.0153	-0.0010	-0.0116	-0.0002	0.0080	4	-0.0036	0
4.93	40.07	0.0197	-0.7071	-0.7071	-0.0279	-0.0019	-0.0139	-0.0002	0.0000	0	-0.0139	-1
10.00	35	0.0324	-0.9587	-0.2844	-0.0403	-0.0027	-0.0092	-0.0001	-0.0218	-11	-0.0311	-3
20.96	24.04	0.0948	-0.7069	0.7073	0.0000	0.0000	0.0671	0.0009	-0.1341	-68	-0.0670	-7
28.97	16.03	0.2078	-0.0001	1.0000	0.2078	0.0142	0.2078	0.0028	-0.2078	-106	0	0
36.99	8.01	0.4561	0.7074	0.7068	0.6450	0.0440	0.3224	0.0043	0.0003	0	0.3226	32
45-	0	1.0000	1.0000	0.0000	1.0000	0.0682	0.0000	0.0000	1.0000	510	1.0000	100
45+	0	1.0000	1.0000	0.0000	1.0000	0.0682	0.0000	0.0000	1.0000	510	1.0000	-100
53.01	8.01	0.4561	0.7074	0.7068	0.6450	0.0440	0.3224	-0.0043	0.0003	0	0.3244	-32
61.03	16.03	0.2078	-0.0001	1.0000	0.2078	0.0142	0.2078	-0.0028	-0.2078	-106	0.0000	0
69.04	24.04	0.0948	-0.7069	0.7073	0.0000	0.0000	0.0671	-0.0009	-0.1341	-68	-0.0670	7
77.06	32.06	0.0432	-1.0000	-0.0003	-0.0432	-0.0029	0.0000	-0.0000	-0.0432	-22	-0.0432	4
85.07	40.07	0.0197	-0.7072	-0.7070	-0.0279	-0.0019	-0.0139	0.0002	0	0	-0.0139	1
90	45	0.0122	-0.2978	-0.9546	-0.0153	-0.0010	-0.0116	0.0002	0.0080	4	-0.0036	0
96	51	0.0068	0.2817	-0.9595	-0.0046	-0.0003	-0.0065	0.0001	0.0084	4	0.0019	0

Deflection and Slope, Shear and Moment are plotted in the following figures

Copyright 2016 Lockheed Martin Corporation.
Note: The current version is always the version on the Lockheed Martin network.

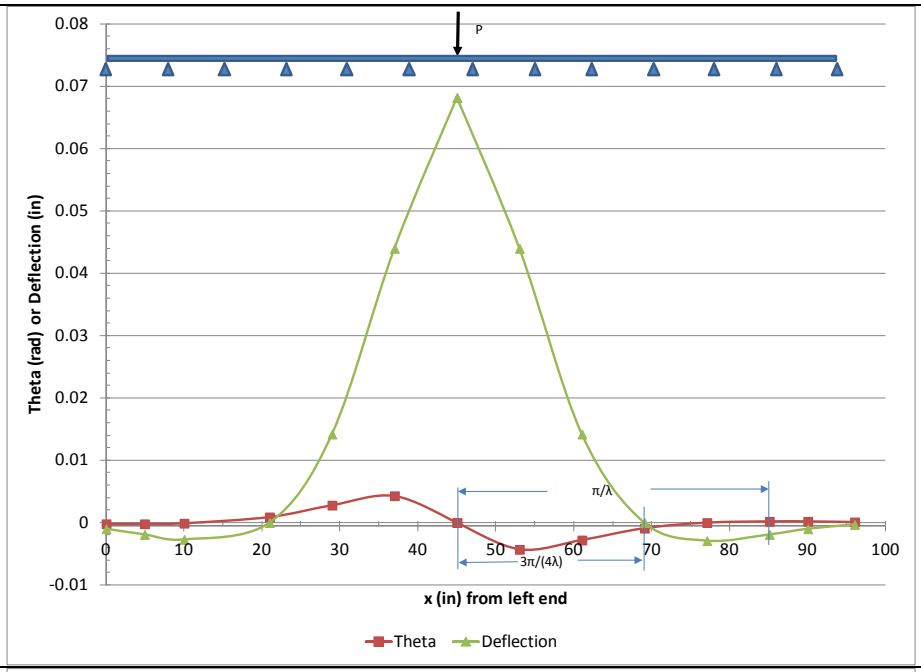

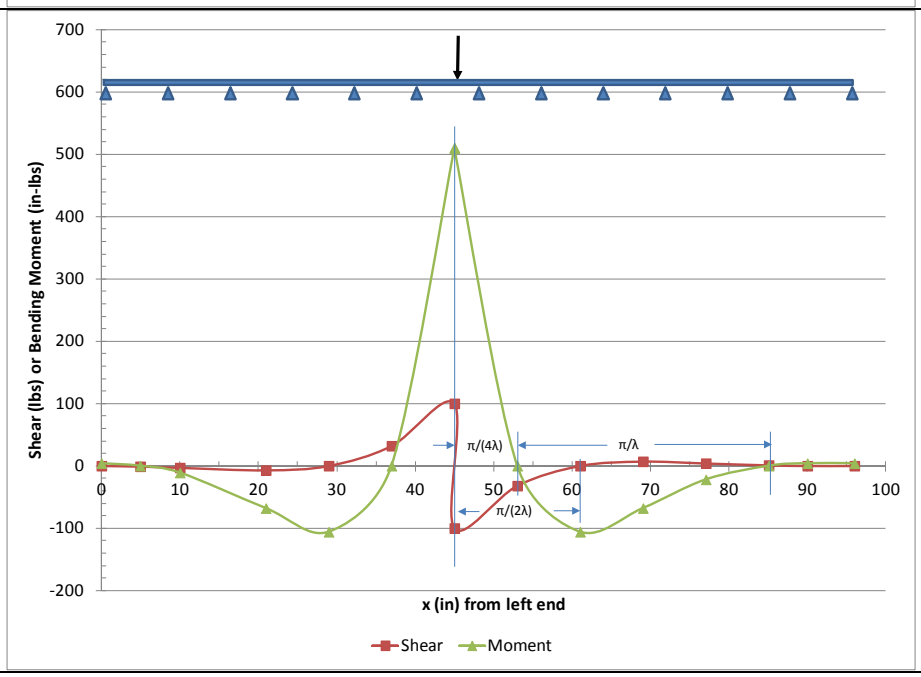

6.2.5 Curved Beam Analysis

This section discusses the analysis of flexural members with relatively sharp curvature which are loaded in the plane of curvature. Typical applications for this type of analysis would be hooks, chains, C-clamps, and otherwise straight beams that may have a local kick or change in direction to accommodate aircraft design features.

Copyright 2016 Lockheed Martin Corporation.
Note: The current version is always the version on the Lockheed Martin network.

Figure 6.2.5-1 shows the positive sign convention for curved beams. Positive moment decreases the radius of curvature (closing moment). Negative moment increases radius of curvature (opening moment). The coordinate *y* is positive away from the origin of the radius of curvature. In this section, for equations where c_I is specified, the sign has been accounted for in the equation so entries for c_I should always be positive; however, where *y* is used, the analyst must take care to ensure the appropriate sign per the sign convention and the geometry of the given problem.

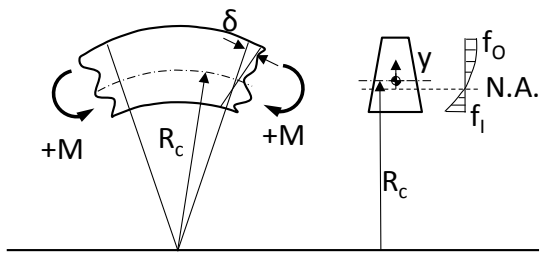

Figure 6.2.5-1 Curved Beam Geometry, Sign Convention and Stresses

Curved beam analysis still assumes that plane sections remain planar and the total deformation is proportional to the distance of the fiber from the neutral axis of the cross section; however, the deformation per unit length (strain) is not proportional to the distance of the fiber from the neutral axis because, due to the curvature, the fibers are not all the same length. Instead the strain distribution is hyperbolic as is shown in Figure 6.2.5-1. In addition, the neutral axis shifts from the centroid and toward the center of curvature increasing the stress on the inner face. This is illustrated in Figure 6.2.5-2. Also shown in the figure are possible cross sections for the curved beam. All sections are drawn to the same scale to represent the same cross-sectional area. The most efficient is the T-section on the left. Because of the shape of the section, the tensile stresses on the inner cap would be almost the same as the compression stresses on the outer flange. The least efficient section will be the circular section because it is not as deep as the remaining sections and also because the inner and outer surfaces have little surface area.

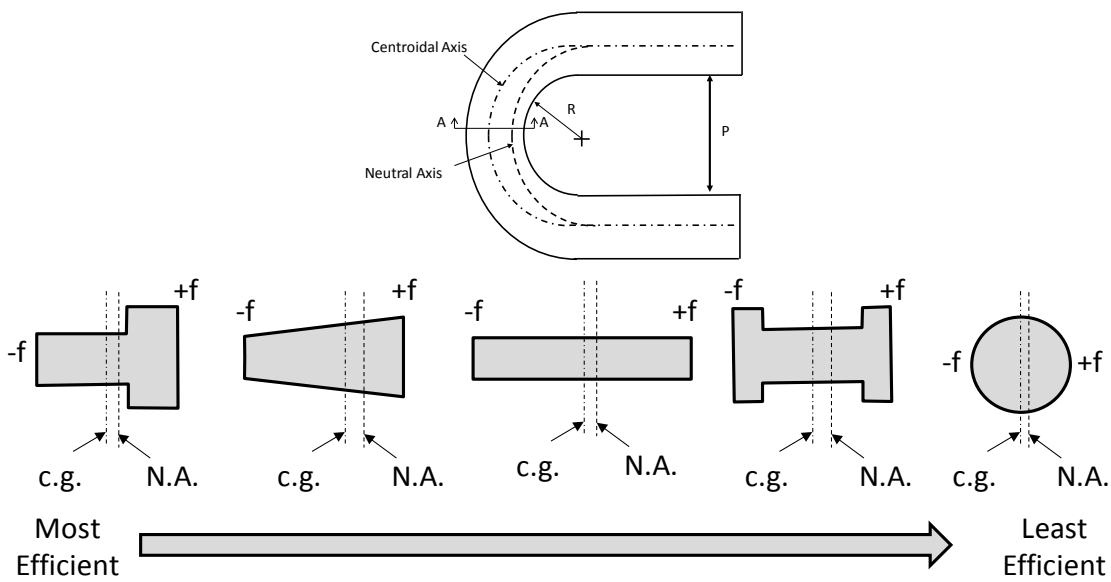

Section A

Figure 6.2.5-2 Illustration of Location of Centroidal and Neutral Axes in Curved Beams

Copyright 2016 Lockheed Martin Corporation.
Note: The current version is always the version on the Lockheed Martin network.

6.2.5.1 Circumferential Stresses in Curved Beams

In the elastic range where stress is proportional to strain, because of the hyperbolic strain distribution described above, the stress is also not proportional to the distance from the neutral axis. When the stress on the inner, concave surface exceeds the elastic limit, local yielding occurs and results in a redistribution of stress. The ultimate stress distribution for a curved beam made of a ductile material approaches the same distribution that is found in the plastic bending of a straight beam. Analysis checks should always be made using the curved beam peak stress at yield for the aircraft-specific yield criteria as well as at ultimate. Deflections, which are typically small, are determined through the use of energy solutions and are beyond the scope of this manual. If the radius-of-curvature to depth-of-beam is greater than 10 peaking of stresses for curved beam effects in the analysis are not necessary as the effect is insignificant.

The stress peaks on the inner, concave surface and is lowest on the outer, convex surface. The approach used in the analysis is to define a new non-dimensional property of area, *Z*, which is similar to the moment of inertia for straight beam bending stress calculations. Thus, the bending stress is given by

$$f_b = \frac{m}{AR_c}\left(1 + \frac{1}{Z}\cdot\frac{y}{R_c + y}\right) \qquad \textbf{Equation 6.2.5-1}$$

where
m is the applied bending moment (in-lb)
A is the cross-sectional area of the beam (in^2)
y is the distance from the centroid to the fiber under analysis (in). It is negative when measured toward the center of curvature, *i.e.*, to the concave side of the beam.
R_c is the distance from the center of curvature to the centroid of the unstressed beam (in)
Z is the curved beam section factor given by Equation 6.2.5-2

The nondimensional curved beam section factor, *Z*, is given by

$$Z = -\frac{1}{A}\int \frac{y}{R_c + y}\,dA \qquad \textbf{Equation 6.2.5-2}$$

Solutions for this integral for typical aircraft sections are given in Table 6.2.5-1. Note that many of the shapes such as the trapezoid and triangular cross sections have the wider side toward the center of curvature which biases the neutral axis shift and results in the peak stresses on the inner and outer surfaces being closer in magnitude.

Table 6.2.5-1 Curved Beam Factors for Various Cross-Sectional Areas[1]

Case	Section	**Z** (note c, c_i are always positive)
1	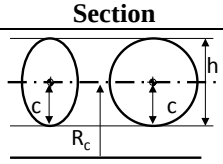 Circle and Ellipse	$Z = -1 + 2\left(\frac{R_c}{c}\right)^2 - 2\left(\frac{R_c}{c}\right)\sqrt{\left(\frac{R_c}{c}\right)^2 - 1}$
2	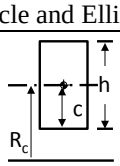	$Z = -1 + \left(\frac{R_c}{h}\right)\left[\ln\left(\frac{R_c + c}{R_c - c}\right)\right]$
3		$c_2 = \frac{h}{3}$

[1] Reference 6-10 (Seely and Smith)

Copyright 2016 Lockheed Martin Corporation.
Note: The current version is always the version on the Lockheed Martin network.

Case	Section	**Z** (note c, c_i are always positive)
	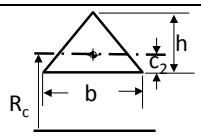 $c_1=h-c_2$	$Z=-1+2\left(\frac{R_c}{h^2}\right)\left[(R_c+c_1)\ln\left(\frac{R_c+c_1}{R_c-c_2}\right)-h\right]$
4	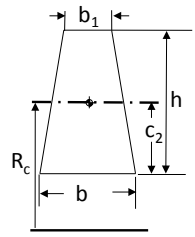 $c_1=h-c_2$	$c_2=\frac{h}{3}\cdot\frac{b+2b_1}{b+b_1}$ $Z=-1+\frac{2R_c}{(b+b_1)h}\left\{\left[b_1+\frac{b-b_1}{h}(R_c+c_1)\right]\ln\left(\frac{R_c+c_1}{R_c-c_2}\right)-(b-b_1)\right\}$
5	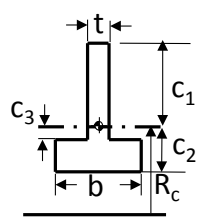	$Z=-1+\frac{R_c}{A}\cdot[t\ln(R_c+c_1)+(b-t)\ln(R_c-c_3)-b\ln(R_c-c_2)]$ $A=tc_1-(b-t)c_3+bc_2$
6	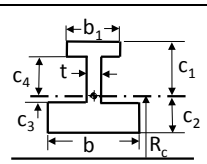	$Z=-1+\frac{R_c}{A}\cdot$ $[b_1\ln(R_c+c_1)+(t-b_1)\ln(R_c+c_4)+(b-t)\ln(R_c-c_3)-b\ln(R_c-c_2)]$
7	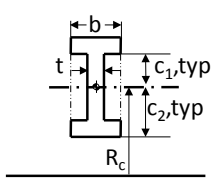	$Z=-1+\frac{R_c}{A}\cdot\left[b\ln\frac{(R_c+c_2)}{(R_c-c_2)}+(t-b)\ln\frac{(R_c+c_1)}{(R_c-c_1)}\right]$ $A=2[(t-b)c_1+bc_2]$ Beam is doubly symmetric. Flanges are the same thickness, but not necessarily t. Flange thickness is defined by c_2-c_1
8	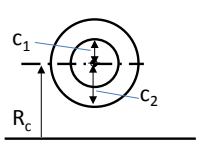	$Z=-1+\frac{2R_c}{c_2^2-c_1^2}\left[\sqrt{R_c^2-c_1^2}-\sqrt{R_c^2-c_2^2}\right]$

Note: Caution must be used for cases 5, 6 and 7. Section 6.2.5.2 will discuss reduction factors which must be used with I- and T-section beams and Section 6.2.5.3 discusses the radial stresses that develop in curved beams which can be critical in I- and T-section beams.

Copyright 2016 Lockheed Martin Corporation.
Note: The current version is always the version on the Lockheed Martin network.

A complementary approach to the one discussed above is to define is curved beam peaking factor,[1] K_I, for the inner most critical cap which represent the ratio of the maximum stress for the curved beam at the extreme fiber divided by the maximum stress for a straight beam. The curved beam peaking factor is then used in conjunction with the straight beam bending formula to calculate the extreme fiber stresses. Since the stresses for any fiber in the curved beam can be obtained directly from Equation 6.2.5-1, the real usefulness of the curved beam peaking factor, K_I, is in the calculation of margins when the curved beam bending is combined with axial loads.

The curved beam peaking factors were developed by calculating curved beam extreme fiber stresses using Equations 6.2.5-1 and 6.2.5-2 and dividing by the straight beam extreme fiber stress for the same cross section. This can be done for any fiber but is derived here specifically for the extreme fiber of the inner cap where the margins of safety are likely to be the lowest. The resulting equation for K_I is given by

$$K_I = -\frac{I}{AR_c c_I}\left(1 + \frac{1}{Z}\cdot\frac{-c_I}{R_c - c_I}\right) \qquad \textbf{Equation 6.2.5-3}$$

where
I is the moment of inertia of the whole section about the centroid (in^4)
A is the cross-sectional area of the beam (in^2)
c_I is the distance from the centroid to the extreme fibers on the inner surface (in) (always positive)
R_c is the distance from the center of curvature to the centroid of the unstressed beam (in)
Z is the curved beam section factor given by Equation 6.2.5-2

If the bending is combined with axial loads applied at the centroid of the cross section, then the curved beam peaking factor, K_I, is used for the axial stress on the inner, concave surface of the curved beam to peak the axial stress. No peaking is required for the axial stress on the outer, convex surface. This approach compares favorably to results of tests conducted using photoelasticity and is given as

$$f_{I-axial} = K_I\left(\frac{P}{A}\right) \qquad \textbf{Equation 6.2.5-4}$$

$$f_{O-axial} = \frac{P}{A} \qquad \textbf{Equation 6.2.5-5}$$

where P is the applied axial load at the cross-sectional centroid, positive for tension(lb)

As a general rule, the margin of safety should be written as a function of load or moment rather than stress because the loads are linear and stresses are not above the proportional limit. This is particularly true in bending; however, in this case the theory has been developed around calculating the point stress at critical locations in the cap based on the local curvature and geometry. Calculation of an allowable load for the section is not possible so an exception is made and the margins of safety will use stresses rather than loads or moments.

The margin of safety is developed for the extreme fiber of the cap closest to the radius of curvature which is the critical area. If other areas need to be considered, the bending stress can be calculated for any location from equation 6.2.5-1 and the curved beam bending factor can be developed for use with axial loads for any location in the beam cross section.

The material yield and ultimate tensile strengths will be used for bending instead of the modulus of bending/rupture

- For tension stress, use F_{ty} for yield calculations and F_{tu} for ultimate calculations

[1] Some textbooks and legacy manuals provide tables of *K* factors for different geometries based on work done by Wilson and Quereau, Reference 6-12. Please note some of the cross sections in these text books have been found to have errors.

Copyright 2016 Lockheed Martin Corporation.
Note: The current version is always the version on the Lockheed Martin network.

- For compression stress, use F_{cy} for yield calculations and F_{cu} calculated per Section 3, Equation 3.3.3-3 for ultimate calculations

The stress ratio for bending is calculated as

$$R_b = \frac{f_b}{F_{allow}} \qquad \textbf{Equation 6.2.5-6}$$

where
f_b is the applied stress, at limit or ultimate, as appropriate for the location in question (psi)
F_{allow} is the ultimate strength, F_{tu} or F_{cu} as appropriate, of the material for ultimate analysis and the yield strength (tension or compression), F_{ty} or F_{cy} as appropriate, of the material for yield analysis (psi)

The stress ratio for axial load is calculated from

$$R_A = \frac{f_{I-axial}}{F_{allow}} \qquad \textbf{Equation 6.2.5-7}$$

where
$f_{I\text{-}axial}$ is the stress due to axial load at limit or ultimate, as appropriate (lb) from Equation 6.2.5-4.

The margin of safety can be calculated for circumferential bending and axial stress as

$$M.S. = \frac{1}{(R_b + R_A)} - 1 \qquad \textbf{Equation 6.2.5-8}$$

Note that per the sign convention, if the moment is a result of an applied axial load, the sign of the stresses will both be positive or both negative.

For I- and T-section beams see Section 6.2.5.4 for additional failure modes which must be considered. An example of the analysis of a solid section is given in Section 6.2.5.5.1.

6.2.5.2 Circumferential and Transverse Bending Stresses– Special Case: I- and T-Section Beams

For I- and T-Section beams the theory provided in the previous section is valid for calculation of circumferential stresses; however, because of the flange behavior, other stresses are present as a result of the distortion which occurs in the cross section as a curved beam undergoes bending. To avoid unconservative predictions, these must be considered.

As the curved beam bends, when the concave side of the beam is in compression, *i.e.*, positive moment per the sign convention, the outer portion of the concave-side flanges will tend to radially deflect toward the neutral axis and the bending stress is not uniformly distributed along the horizontal flange. This results in a loss of effectivity in the flanges. This is illustrated in Figure 6.2.5-3. Note that on the extreme surface of the inner cap, the stress is negative due to the circumferential bending and positive due to the transverse flange bending. These two components are always of opposite sign.

Copyright 2016 Lockheed Martin Corporation.
Note: The current version is always the version on the Lockheed Martin network.

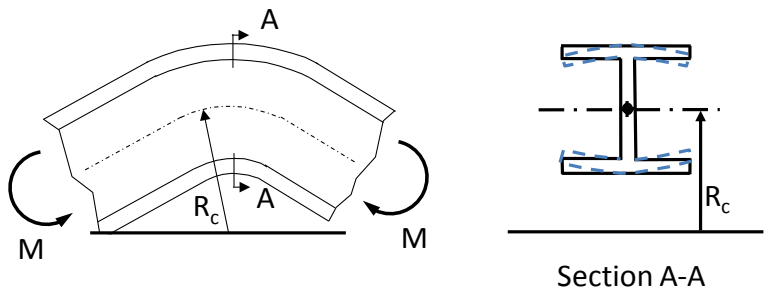

Figure 6.2.5-3 Deflection of I-Section Flanges Due to Positive Curved Beam Circumferential Bending

A flange width effectivity factor, α, has been developed which is used to modify the projecting flange width on either side of the web prior to calculating *Z*. Note that the method is empirically developed ignoring the fillet radii so the projecting cap width, *b'*, is measured from the free edge to the web face. Thus the effective width is calculated as

$$b_{eff}=\alpha b' \qquad \textbf{Equation 6.2.5-9}$$

where
b' is the projecting cap width of the actual section (in)
α is the flange width reduction factor from Table 6.2.5-2

The total flange width, after the effectivity modification, for use in Table 6.2.5-1 is the sum of the web thickness plus two times the effective width, b_{eff}.

Important Note: The flange width reduction factor is also applied when doing stress analysis using linear FEA results. This is true even if the caps are modeled separately as shell elements and curved beam effects are included in the resulting model loads.

Accompanying the flange distortion are transverse bending stresses in the flange which must be included in the analysis. This is accomplished via a transverse bending stress factor. The flange on each side of the web acts akin to a cantilever beam so maximum transverse bending stress will be in the flange at the junction of the flange and web, shown as points A and B of Figure 6.2.5-4. The transverse stress is calculated from

$$f_{b\text{-}tr}=\beta f_{b\text{-}cap} \qquad \textbf{Equation 6.2.5-10}$$

where
β is the transverse bending stress factor from Table 6.2.5-2
$f_{b\text{-}cap}$ is the circumferential curved beam bending stress at the centroid of the inner cap of the effective section calculated from Equation 6.2.5-1 (psi)

For a positive moment, the stress at A will be a tensile stress and the stress at B will be compressive. The flange width effectivity and the transverse bending stress factors are illustrated in Figure 6.2.5-4, along with the geometry. The parameters α and β are tabulated in Table 6.2.5-2.

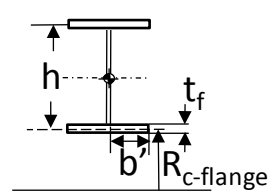

$R_{c\text{-}flange}$ is from center of curvature to centerline of cap

Copyright 2016 Lockheed Martin Corporation.
Note: The current version is always the version on the Lockheed Martin network.

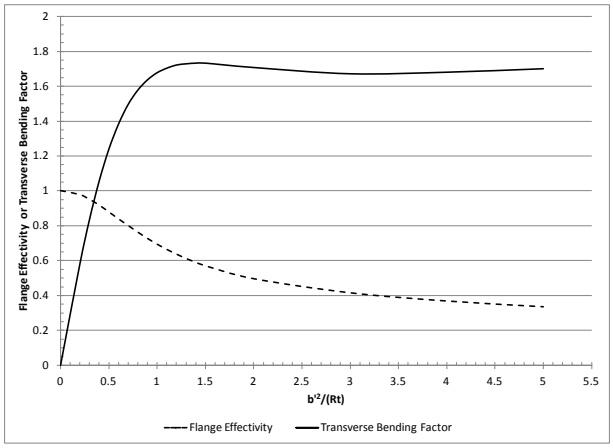

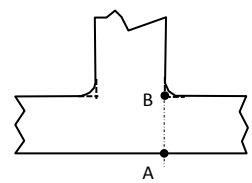

Figure 6.2.5-4 Curved Beam Factors and Geometry as Applicable to I- and T-Sections

The section does not have to be symmetric nor do both caps have to be of the same thickness. A flange effectivity factor is calculated for each flange based on its unique geometry. Once the effective flange width has been calculated, the new effective section can be used to calculate the curved beam section factor and stresses per Section 6.2.5.1 and the transverse bending stresses per Equation 6.2.5-10. This will be illustrated in the Example Problem in Section 6.2.5.5.2. Note the effective flange widths are not used for the radial stress calculation in Section 6.2.5.3 as they are not affected by the distortion of the cross section.

Table 6.2.5-2 Flange Effectivity and Transverse Bending Stress Factors

$\frac{b'^2}{R_{c-flange}t_f}$	Flange Effectivity Factor, α	Transverse Bending Stress Factor, β
0.0	1.000	0.000
0.2	0.977	0.580
0.3	0.950	0.836
0.4	0.917	1.056
0.5	0.878	1.238
0.6	0.838	1.382
0.7	0.800	1.495
0.8	0.762	1.577
0.9	0.726	1.636
1.0	0.693	1.677
1.1	0.663	1.703
1.2	0.636	1.721
1.3	0.611	1.728
1.4	0.589	1.732
1.5	0.569	1.732
2.0	0.495	1.707
3.0	0.414	1.671
4.0	0.367	1.680
≥5.0	0.334	1.700

where, as shown in Figure 6.2.5-4:
$R_{c\text{-flange}}$ is the distance from the center of curvature to the centerline of the flange under consideration (in)
b' is the projecting actual cap width of the flange under consideration (no web included) (in)
t_f is the thickness of the flange under consideration(in)

Copyright 2016 Lockheed Martin Corporation.
Note: The current version is always the version on the Lockheed Martin network.

6.2.5.3 Radial Stresses in Curved Beams

For curved beams in bending in addition to the normal stresses acting on the cross-sectional areas passing through the center of curvature, stresses develop on planes at right angles to the center of curvature. These stresses are called radial stresses since the direction is along the radius of curvature. These stresses are generally zero at the convex (inner) and concave (outer) surfaces of the beam since there are no loads on the beams at these locations. The radial stress is also small for solid sections like rectangles, circular or trapezoidal solid sections, but for I- and T-section beams where there is a rapid change in section, *e.g.*, cap to web, these stresses can be significant.

6.2.5.3.1 General Solution for Radial Stresses

The general solution for determining the radial stresses in an I- or T-section curved beam is discussed in this section. It applies to both symmetrical and unsymmetrical sections with regions of local curvature. This is depicted in Figure 6.2.5-5.

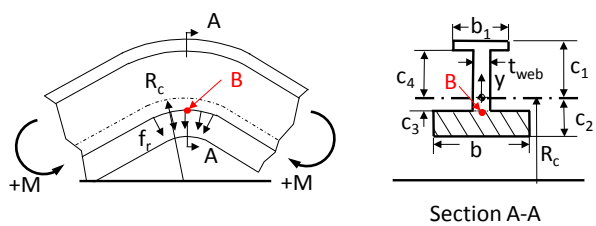

Figure 6.2.5-5 Geometry of Beam with Web Effective in Bending

The radial stress at a location a distance *y* from the centroid of the section can be determined from

$$f_r = \frac{mA'}{t_w A R_c (R_c + y)}\left(1 - \frac{Z'}{Z}\right) \qquad \textbf{Equation 6.2.5-11}$$

where
A' is the area between the fiber under analysis and the extreme fiber of the section toward the center of curvature (in^2)
Z' is analogous to the curved beam section property of Equation 6.2.5-2 but for the same region of the cross section as defined by A' (nondimensional)
t_w is the web thickness (in)
y is the distance from the centroid to the point of interest (negative toward the center of curvature) (in)

For positive bending moment the radial stresses at the inner cap and adjacent web will be compressive, the same as for the circumferential stresses.

The effective section reduction factors of Section 6.2.5.2 do not apply to the radial stress calculation.

The reduced curved beam section factor is given for the general case by

$$Z' = -\frac{1}{A'}\int_{-c_2}^{y} \frac{y}{R_c + y}\, dA' \qquad \textbf{Equation 6.2.5-12}$$

However, in most cases, the critical location for an I- or T-section beam cap will be the web-to-cap interface at Point B in Figure 6.2.5-5 where, again, the fillet radii are being ignored. While Equation 6.2.5-12 can be solved for any location in the cross-section, a solution specifically for Point B of Figure 6.2.5-5, Section A-A is given as

$$Z' = -\frac{b}{A'}\left[(c_2 - c_3) + R_c \ln\frac{R_c - c_2}{R_c - c_3}\right] \qquad \textbf{Equation 6.2.5-13}$$

Copyright 2016 Lockheed Martin Corporation.
Note: The current version is always the version on the Lockheed Martin network.

where
b is the width of the inner cap closest to the center of curvature (in)
A' is the area between the fiber under analysis and the extreme fiber of the section toward the center of curvature, in this case, A' is the area of the cap closest to the center of curvature shown cross-hatched in Section A-A of Figure 6.2.5-5 (in^2)
c_2 is the distance from the centroid to the outer fiber of the cap closest to the center of curvature (in)
c_3 is the distance from the centroid to the inner fiber of the cap closest to the center of curvature (in)
R_c is the distance from the section centroid to the center of curvature (in)

Note, as with all of the curved beam calculations, the centroid is the geometric centroid of the cross section of the equivalent straight beam.

6.2.5.3.2 Radial Stresses in Thin Sheet Curved Beams

Section 6.5 discusses shear flow distributions in thin sheet aircraft structure where it is assumed the webs are ineffective in bending. In curved beams, the web reacts the radial forces that result from the curvature to restrain the flange in equilibrium. This load must be considered in addition to the web shear flows developed in Section 6.5. This results in a compression running loads in the web for positive bending moment. This is illustrated in Figure 6.2.5-6.

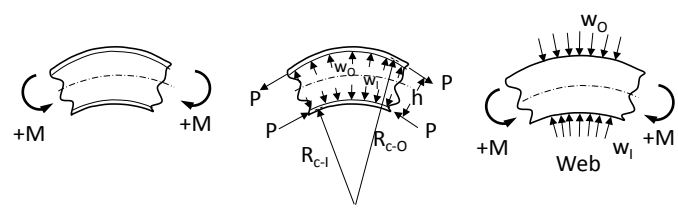

Figure 6.2.5-6 Web Reactions Resulting from Beam Curvature

Section 6.2.5.3.1 may be used to solve for these loads but this section provides a simple but satisfactory approximation for the radial stress that is developed which is valid for deep beams and also symmetric sections. The axial load in the cap due to the bending moment is given as

$$P = \frac{m}{h}$$ **Equation 6.2.5-14**

Where
m is the applied moment (in-lb)
h is the distance between cap centroids (in)

The resulting radial running load in the web is negative for positive bending moment and is given by

$$w_I = \frac{P}{R_{c-I}}$$ **Equation 6.2.5-15**

$$w_O = \frac{P}{R_{c-O}}$$ **Equation 6.2.5-16**

Where
P is the calculated cap axial load from Equation 6.2.5-14 (lb)
R_{c-I}, R_{c-O} are the inner and outer radii of the beam to the inner and outer flange centroids (in)

A compressive radial web load may cause the web to buckle and must be accounted for in the web analysis. This is often referred to as a “crushing load” due to curvature and its presence is the reason for the best practices guidance that all kicks in beams should be minimized and backed up with a stiffener which

Copyright 2016 Lockheed Martin Corporation.
Note: The current version is always the version on the Lockheed Martin network.

supports the flanges against the deflection while reducing web bay size and reacting the resulting compressive radial loads in the webs.

The stresses in the web adjacent to the inner cap can be calculated from Equation 6.2.5-17 by dividing by the web thickness.

$$f_{r,I} = \frac{w_I}{t_w} \qquad \textbf{Equation 6.2.5-17}$$

where
t_w is the web thickness (in)

Crushing loads can also develop in an initially straight beam structure as it takes on the shape of a curved beam under applied bending loads or bending induced by applied shear loads. In this case, crushing loads in beam webs can be calculated from the radius of curvature that results from the beam deflection. Where applicable, these crushing loads must be combined with FEM-generated internal loads as linear static finite element models will not capture this effect since they are the result of nonlinearities due to large displacements. Section 6.6 has some examples illustrating the calculation of crushing loads in shear resistant and intermediate diagonal tension beams.

If the radius of curvature of the beam is assumed to be the same for upper and lower surfaces, then using the equation for slope and moment from Table 6.2.1-2, the radius of curvature of the deformed beam, ρ, can be described as

$$\frac{1}{\rho} = \frac{\partial\theta}{\partial x} = \frac{M}{EI} \qquad \textbf{Equation 6.2.5-18}$$

where
ρ is the radius of curvature of the deformed beam under load
E is the elastic modulus of the beam (psi)
I is the moment of inertia for the beam assembly (in^4)
M is the bending moment of the beam (in-lb)

The stress at the compression surface is a function of the overall beam bending moment, the distance from the beam neutral axis and the moment of inertia of the beam allowing an equation for the stress at the compression surface

$$f_c = \frac{M y_{NA}}{I} \qquad \textbf{Equation 6.2.5-19}$$

where
y_{NA} is the distance from the neutral axis of the beam to the centroid of the effective compression cap (cap + effective skin) (in)

Further, the stress at the compression surface of the beam can be used to determine equivalent axial cap load

$$P = f_c A \qquad \textbf{Equation 6.2.5-20}$$

where
f_c is is the stress in the compression beam cap (psi)
A is the area of the cap plus any effective skin area (in^2)

Using Equation 6.2.5-14, 6.2.5-18 through 6.2.5-20, an expression for the crushing load per inch of span of the beam can be determined as

$$w_I = \frac{P}{R_{c-I}} = \frac{f_c A M}{EI} = \frac{f_c^2 A}{E y_{NA}} \qquad \textbf{Equation 6.2.5-21}$$

Copyright 2016 Lockheed Martin Corporation.
Note: The current version is always the version on the Lockheed Martin network.

Equation 6.2.5-21 derives the crushing forces that are developed from beam curvature into easily attainable components. It the beam is made up of structural elements of different materials, the elastic modulus of the beam can be derived as the area weighted modulus of the components making up the cross section. The remaining terms in the equation are the stresses and area of the compression cap and effective skin along with the distance from the bending neutral axis of the beam section to the effective cap centroid. This running load must be reacted by the beam webs in addition to any loads present in the finite element model.

This approach is applicable to all types of beam structures including keel beams, spar webs, bulkheads, longerons and so forth.Care must be taken to account for any twist if the beam is part of a composite structure but not loaded at the structural shear center, *e.g.*, the front or rear spar of a wing.

6.2.5.4 Margin of Safety Calculations for I- and T-Section Beams in Curved Beam Bending

Once the circumferential and transverse bending stresses and the radial stress have been calculated, a margin of safety can be written. With curved beam analysis, yield margins should always be checked. Additionally, plastic bending should not be used since there is no test data available for correlation with this method.

For circumferential bending plus axial load the margin of safety calculation is shown in Section 6.2.5.1. For solid sections such as trapezoid, rectangle, circle, etc., this is the only margin necessary. But for curved I- or T-beams additional areas must be examined.

The stress ratio for the transverse bending stress can be calculated as

$$R_{b-tr} = \frac{f_{b-tr}}{F_{allow}} \qquad \textbf{Equation 6.2.5-22}$$

where
f_{b-tr} is the transverse bending stress per Equation 6.2.5-10, at limit or ultimate, as appropriate for the analysis location (psi)
F_{allow} is the ultimate strength, F_{tu} or F_{cu} as appropriate[1], of the material for ultimate analysis and the yield strength, F_{ty} or F_{cy} as appropriate, of the material for yield analysis (psi)

The stress ratio for the radial stress can be calculated as

$$R_r = \frac{f_r}{F_{allow}} \qquad \textbf{Equation 6.2.5-23}$$

where
f_r is the radial stress from Equation 6.2.5-11 or 6.2.5-17, at limit or ultimate, as appropriate for the location in question (psi)
F_{allow} is the ultimate strength, F_{tu} or F_{cu} as appropriate[2], of the material for ultimate analysis and the yield strength, F_{ty} or F_{cy} as appropriate, of the material for yield analysis (psi)

There are two potentially critical locations for curved I- or T-section beams, shown in Figure 6.2.5-7

1. At the extreme fiber of the cap closest to the center of curvature (inner cap) which will have the peak circumferential bending stress and stress due to axial loading combined with the transverse bending stress. These stresses are perpendicular to one another and always opposite in sign.
2. On the same cap at the base of the intersecting web a triaxial compression or tension stress state occurs which stresses due to axial loading combined with circumferential bending stresses, transverse bending and radial stress.

[1] Reference Section 3, Equation 3.3.3-3
[2] Reference Section 3, Equation 3.3.3-3

Copyright 2016 Lockheed Martin Corporation.
Note: The current version is always the version on the Lockheed Martin network.

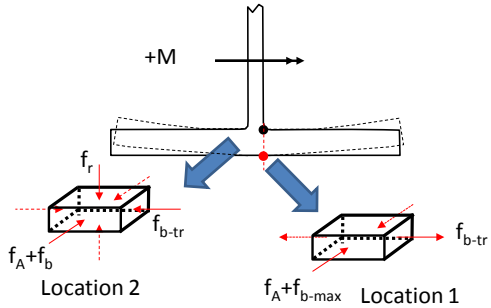

Figure 6.2.5-7 Critical Locations for Curved I- and Tee-Section Bending

For Location 1, the approach defined in Section 2.5.4.1 and expressed as Equation 2.5.4-1 will be used to calculate both the yield and ultimate margins of safety, as follows:

- The material yield and ultimate tensile strengths, as discussed in conjunction with Equations 6.2.5-6 and 6.2.5-7, will be used for bending instead of the modulus of bending/rupture.
- R_{n1} is the result of circumferential bending and axial stress at the extreme fiber of the inner cap
- R_{n2} is the transverse bending at the extreme fiber of the inner cap
- Set R positive for tension loads and negative for compression loads

The margin of safety is calculated from

$R_{n1} = R_b + R_A$ — Circumferential Bending plus Axial Ratios per Equations 6.2.5-6 and 6.2.5-7

$R_{n2} = R_{b-tr}$ — Transverse Bending Ratio per Equation 6.2.5-18

Equation 6.2.5-24

$$R_{bar} = (R_{n1}^2 + R_{n2}^2 - R_{n1}R_{n2} + R_s^2)^{1/2}$$

$$M.S. = \frac{1}{R_{bar}} - 1$$

where
R_b is the bending stress ratio where f_b is the circumferential bending stress at the extreme fiber (psi)
$R_{b\text{-}tr}$ is the transverse bending stress ratio where $f_{b\text{-}tr}$ is the stress per Equation 6.2.5-10 at the extreme fiber (psi)

For Location 2, the maximum distortion failure theory is used for the triaxial tension or compression stress state. It is given as

$R_{n1} = R_b + R_A$ — Circumferential Bending plus Axial Ratio per Equations 6.2.5-6 and 6.2.5-7

$R_{n2} = R_{b-tr}$ — Transverse Bending Ratio per Equation 6.2.5-22

$R_{n3} = R_r$ — Radial Stress Ratio per Equation 6.2.5-23

Equation 6.2.5-25

$$R_{bar} = [(R_{n1} - R_{n2})^2 + (R_{n2} - R_{n3})^2 + (R_{n1} - R_{n3})^2]^{1/2}$$

$$M.S. = \frac{\sqrt{2}}{R_{bar}} - 1$$

where
R_b is the bending stress ratio where f_b is the stress at the midplane of the cap (psi)
$R_{b\text{-}tr}$ is the transverse bending stress ratio where $f_{b\text{-}tr}$ is the stress per Equation 6.2.5-10 at the intersection with the web (psi)
R_r is the radial bending stress ratio where f_r is the stress per Equation 6.2.5-11 or 6.2.5-17 at the intersection with the web (psi)

Copyright 2016 Lockheed Martin Corporation.
Note: The current version is always the version on the Lockheed Martin network.

6.2.5.5 Curved Beam Analysis – Example Problems

Section 6.2.5.5.1 provides an example of curved beam bending of a solid trapezoidal shape.

Section 6.2.5.5.2 provides an example of curved beam bending of an I-beam.

6.2.5.5.1 Example Problem – Curved Beam Analysis of a Hook

Given a tie-down hook with a trapezoidal cross section shown. Calculate the yield and ultimate and margins of safety for PH13-8 H1000 Steel, F_{ty} = 190,000 psi F_{tu} = 205,000 psi at Section A-A for For the yield criteria assume "no yield at 1.15 x limit load"	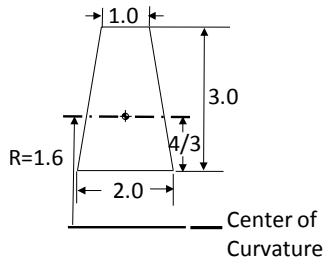 A= 4.5 in^2 I=3.25 in^2 R = 1.60 in	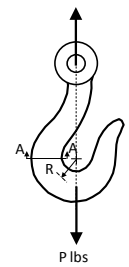 P=60000 lbs (limit)
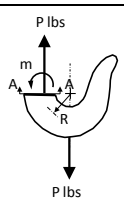 Determine the limit Moment at Section A-A.	Axial load and moment will act through at centroid of the cross section at Section A-A: *Limit* *m=RP = 1.6(60000)=96000 in-lbs* *Ultimate* *m=1.5(96000)=144000 in-lbs* **Note: Moment is calculated about centroidal axis to be consistent with analysis approach.**	Moment is increasing radius, *i.e.*, opening the hook, so it is negative, resulting in a tension on the inner surface and compression on the outer surface. m= -96000 in-lbs (limit) m= -144000 on-lbs (ultimate)

Calculate the allowable bending moment and axial load using Equation 6.2.5-6. Calculate Z, Table 6.2.5-1, Case 4		
Determine the location of the centroid	$c_2 = \frac{h}{3}\cdot\frac{b+2b_1}{b+b_1} = \frac{3}{3}\cdot\frac{2+2(1)}{2+1} = 1.333$	c_2=1.333 in c_1=3-1.333=1.667 in
Calculate Z		
$Z = -1 + \frac{2R_c}{(b+b_1)h}\left\{\left[b_1 + \frac{b-b_1}{h}(R_c+c_1)\right]\ln\left(\frac{R_c+c_1}{R_c-c_2}\right) - (b-b_1)\right\}$		
$Z = -1 + \frac{2\cdot 1.6}{(2+1)3}\left\{\left[1 + \frac{2-1}{3}(1.6+1.667)\right]\ln\left(\frac{1.6+1.667}{1.6-1.333}\right) - (2-1)\right\} = 0.505$		
Calculate the curved beam bending factor for the inner cap, K_I where y = $-c_I$; Equation 6.2.5-3		
$K_I = -\frac{I}{AR_c c_I}\left(1 + \frac{1}{Z}\cdot\frac{-c_I}{R_c - c_I}\right) = -\frac{3.25}{(4.5)(1.6)(1.333)}\left(1 + \frac{1}{0.505}\cdot\frac{-1.333}{1.6-1.333}\right) = 3.01$		
Calculate the bending and axial stresses at limit load for the inner cap extreme fiber		
$f_b = \frac{m}{AR_c}\left(1 + \frac{1}{Z}\cdot\frac{y}{R_c+y}\right) = \frac{-96000}{4.5(1.6)}\left(1 + \frac{1}{0.505}\cdot\frac{-1.333}{1.6-1.333}\right) = 118482psi\ (limit)$		
$f_{I-axial} = K_I\frac{P}{A} = 3.01\frac{60000}{4.5} = 40133\ (limit)$		
Calculate the bending and axial stresses at ultimate load for the inner cap extreme fiber		
$f_b = \frac{m}{AR_c}\left(1 + \frac{1}{Z}\cdot\frac{y}{R_c+y}\right) = \frac{-144000}{4.5(1.6)}\left(1 + \frac{1}{0.505}\cdot\frac{-1.333}{1.6-1.333}\right) = 177723psi\ (ultimate)$		

Copyright 2016 Lockheed Martin Corporation.
Note: The current version is always the version on the Lockheed Martin network.

$f_{I-axial} = K_I \frac{P}{A} = 3.01 \frac{90000}{4.5} = 60200\ (ultimate)$		
Calculate the Limit Load Ratios	$R_b = \frac{f_b}{F_{allow}} = \frac{118482}{190000} = 0.62$	R_b=0.62 (limit)
	$R_A = \frac{f_{I-axial}}{F_{allow}} = \frac{40133}{190000} = 0.21$	R_A=0.21 (limit)
Calculate the Yield margin of safety per "no yield at 1.15xLimit Load" criteria	$M.S. = \frac{1}{1.15(R_b + R_A)} - 1 = \frac{1}{1.15(0.62 + 0.21)} - 1 = 0.05$	M.S. =0.05 (Yield)
Calculate the Ultimate Load Ratios	$R_b = \frac{f_b}{F_{allow}} = \frac{177723}{205000} = 0.87$	R_b=0.87 (Ultimate)
	$R_t = \frac{f_A}{F_{allow}} = \frac{60200}{205000} = 0.29$	R_t=0.29 (Ultimate)
Calculate the Ultimate Margin of Safety (Ultimate Safety Factor = 1.5)	$M.S. = \frac{1}{(R_b + R_t)} - 1 = \frac{1}{(0.87 + 0.29)} - 1 = -0.14$	M.S. = -0.14 (Ultimate)

6.2.5.5.2 Example Problem – Curved Beam Analysis of an I-Beam

Given a curved I-Beam shown.

Calculate the yield and ultimate margins of safety for 7050-T74511 Aluminum Extrusion

Property	L (psi)	T (psi)	S (psi)
F_{tu}	73000	71000	63900
F_{ty}	63000	60000	54000
F_{cy}	63000	63000	59200

For the yield criteria assume "no yield at limit load"

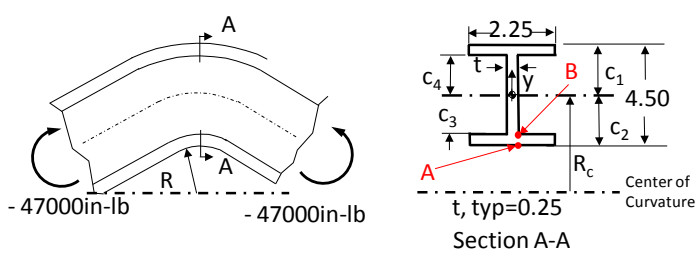

A= 2.125 in^2
R = 2.000
m=-47000 in-lb ultimate

Calculate $R_{c\text{-flange}}$ for inner and outer caps: $R_{c\text{-I}}$, $R_{c\text{-O}}$	$R_c=R+c_2=2.00+4.50/2 = 4.25$ in $R_{c\text{-I}}=R+t_{flange}/2=2.00+0.25/2=2.125$ in $R_{c\text{-O}}=R+h-t_{flange}/2=2.00+4.50-0.25/2 = 6.375$in	$R_c=4.25$in $R_{c\text{-I}}=2.125$in $R_{c\text{-O}}=6.375$ in
Calculate flange overhang	$b'=(b-t_{web})/2=(2.25-0.25)/2=1.0$in	$b'=1.0$
Section is I-Beam - Determine the Effective Cross Section	$[b'^2/(R_{c\text{-I}}t)]_I=[1.0^2/(2.125\bullet 0.25)]=1.882$ $[b'^2/(R_{c\text{-O}}t)]_O=[1.0^2/(6.375\bullet 0.25)]=0.627$	
From Table 6.2.5-2, determine α,β (Interpolation required)	*Inner Cap:* $\alpha=0.505$ $\beta=1.711$ *Outer Cap:* $\alpha=0.828$ $\beta=1.413$	
Calculate Effective flange widths: $b_{eff}=\alpha b'$	*Inner Cap:* $b_{eff}=\alpha b'=0.505(1.0)=0.505$in $b=2(0.505)+0.25=1.26$in *Outer Cap:* $b_{eff}=\alpha b'=0.828(1.0)=0.828$in $b_1=2(0.828)+0.25=1.91$in	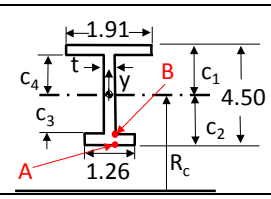
Section Properties for Effective Section	*From IDAT/Section:* $A=1.793$in^2;$c_2=2.442$ in *Then* $c_3=2.442-0.25=2.192$ in	Effective Section: A=1.793 in^2 c_1=2.058 in

Copyright 2016 Lockheed Martin Corporation.
Note: The current version is always the version on the Lockheed Martin network.

	c_1=4.50-2.442=2.058in *c_4=2.058-0.25=1.808 in* *R_c=R+c_2=2.00+2.442=4.442 in*	c_2=2.442 in c_3=2.192 in c_4=1.808 in R_c=4.442 in
Calculate the Circumferential Bending Stress and Margin of Safety at Point A Calculate Z, Table 6.2.5-1, Case 6		
$Z = -1 + \frac{R_c}{A} \cdot [b_1 \ln(R_c + c_1) + (t - b_1)\ln(R_c + c_4) + (b - t)\ln(R_c - c_3) - b\ln(R_c - c_2)]$		
$Z = -1 + \frac{4.442}{1.793} \cdot [1.91\ln(4.442 + 2.058) + (0.25 - 1.91)\ln(4.442 + 1.808) + (1.26 - 0.25)\ln(4.442 - 2.192) - 1.26\ln(4.442 - 2.442)] = 0.186$		
Calculate the Circumferential Bending Stress at Limit for Point A m=-47000/1.5=-31333in-lb limit		
$f_b = \frac{m}{AR_c}\left(1 + \frac{1}{Z} \cdot \frac{y}{R_c + y}\right) = \frac{-31333}{1.793(4.442)}\left(1 + \frac{1}{0.186} \cdot \frac{-2.442}{4.442 - 2.442}\right) = 21891psi$		
Calculate the Circumferential Bending Stress at Ultimate for Point A The applied moment is negative, resulting in a tension stress at the inner cap m=-47000 in-lb		
$f_b = \frac{m}{AR_c}\left(1 + \frac{1}{Z} \cdot \frac{y}{R_c + y}\right) = \frac{-47000}{1.793(4.442)}\left(1 + \frac{1}{0.186} \cdot \frac{-2.442}{4.442 - 2.442}\right) = 32837psi$		
Calculate the Limit Load Ratios	$R_b = \frac{f_b}{F_{ty-L}} = \frac{21891}{63000} = 0.35$	R_b=0.35 (limit)
Calculate the Yield margin of safety per "no yield at Limit" criteria…Circumferential Bending, Point A	$M.S. = \frac{1}{R_b} - 1 = \frac{1}{0.35} - 1 = 1.85$	M.S. =1.85 (Yield)
Calculate the Ultimate Load Ratios	$R_b = \frac{f_b}{F_{tu-L}} = \frac{32837}{73000} = 0.45$	R_b=0.45 (Ultimate)
Calculate the Ultimate Margin of Safety…Circumferential Bending, Point A	$M.S. = \frac{1}{R_b} - 1 = \frac{1}{0.45} - 1 = 1.22$	M.S. = 1.22 (Ultimate)
Calculate the Transverse Bending Stress and Margin of Safety at Point A Recall that the transverse bending stress is opposite in sign to the circumferential stress at Point A due to the direction of cap flange deformation. (At point B they will be the same sign)		
Calculate the circumferential bending at the centroid of the inner cap at limit y=-(c_2-t/$_2$)=-(2.442-0.25/2)=-2.317		
$f_{b-cap} = \frac{m}{AR_c}\left(1 + \frac{1}{Z} \cdot \frac{y}{R_c + y}\right) = \frac{-31333}{1.793(4.442)}\left(1 + \frac{1}{0.186} \cdot \frac{-2.317}{4.442 - 2.317}\right) = 19128psi$		
Calculate the circumferential bending at the centroid of the inner cap at ultimate		
$f_{b-cap} = \frac{m}{AR_c}\left(1 + \frac{1}{Z} \cdot \frac{y}{R_c + y}\right) = \frac{-47000}{1.793(4.442)}\left(1 + \frac{1}{0.186} \cdot \frac{-2.317}{4.442 - 2.317}\right) = 28692psi$		
Calculate the transverse bending stress, *β=1.711*, previously determined (Limit)	$f_{b-tr} = \beta f_{b-cap} = 1.711(19128) = 32728\ psi$	f_{b-tr}=32728 psi (limit)
Calculate the transverse bending stress, *β=1.711*, previously determined (Ultimate)	$f_{b-tr} = \beta f_{b-cap} = 1.711(28692) = -49092\ psi$	f_{b-tr}=49092 psi (ultimate)
Calculate the Yield Load Ratios Compression, use F_{cy}	$R_{b-tr} = \frac{f_{b-tr}}{F_{cy-T}} = \frac{32728}{63000} = 0.52$	R_{b-tr}=0.52 (Yield)

Copyright 2016 Lockheed Martin Corporation.
Note: The current version is always the version on the Lockheed Martin network.

Calculate the Ultimate Load Ratios		$R_{b-tr} = \frac{f_{b-tr}}{F_{tu-T}} = \frac{49092}{71000} = 0.69$	R_b=0.69(Ultimate)
Calculate the transverse-circumferential stress interaction: Yield, Pt A At Limit	Circumferential + Axial	$R_{n1} = R_b + R_A = R_b + 0 = 0.35$	R_{n1}=0.35
	Transverse per Section 6.2.5.4, compression is negative	$R_{n2} = R_{b-tr} = -0.52$	R_{n2}=-0.52
	Interaction Equation	$R_{bar} = (R_{n1}^2 + R_{n2}^2 - R_{n1}R_{n2} + R_s^2)^{1/2} = [0.35^2 + (-0.52)^2 - (0.35)(-0.52) + 0^2]^{1/2} = 0.76$	R_{bar}=0.76
Transverse-Circumferential Margin of Safety at Limit		$M.S. = \frac{1}{R_{bar}} - 1 = \frac{1}{0.76} - 1 = 0.32$	M.S.=0.32 Yield
Calculate the transverse-circumferential stress interaction: Ultimate, Pt A	Circumferential + Axial	$R_{n1} = R_b + R_A = R_b + 0 = 0.45$	R_{n1}=0.45
	Transverse	$R_{n2} = R_{b-tr} = -0.69$	R_{n2}=-0.69
	Interaction Equation	$R_{bar} = (R_{n1}^2 + R_{n2}^2 - R_{n1}R_{n2} + R_s^2)^{1/2} = [0.45^2 + (-0.69)^2 - (0.45)(-0.69) + 0^2]^{1/2} = 0.99$	R_{bar}=0.99
Transverse-Circumferential Margin of Safety at Ultimate		$M.S. = \frac{1}{R_{bar}} - 1 = \frac{1}{0.99} - 1 = 0.01$	M.S.=0.01 Ultimate

Calculate the Radial Stress and Margin of Safety at Point B Use full section (not effective section) per Section 6.2.5.3.1. For negative moment, radial stresses are in tension in the inner cap. Point B

Calculate A' (area of inner cap)	A'=bt=2.25(0.25)=0.5625 in^2	

Calculate Z'

$$Z' = -\frac{b}{A'}\left[(c_2 - c_3) + R_c \ln\frac{R_c - c_2}{R_c - c_3}\right] = -\frac{2.25}{0.5625}\left[(2.25 - 2.00) + 4.25 \ln\frac{4.25 - 2.25}{4.25 - 2.00}\right] = 1.002$$

Calculate Z for the original section

$$Z = -1 + \frac{R_c}{A} \cdot [b_1 \ln(R_c + c_1) + (t - b_1)\ln(R_c + c_4) + (b - t)\ln(R_c - c_3) - b\ln(R_c - c_2)]$$

$$Z = -1 + \frac{4.25}{2.125} \cdot [2.25\ln(4.25 + 2.25) + (0.25 - 2.25)\ln(4.25 + 2.00) + (2.25 - 0.25)\ln(4.25 - 2.00) - 2.25\ln(4.25 - 2.25)] = 0.217$$

Calculate radial stress at limit load. Use actual cross section (not effective cross section). t_{web}=0.25 in y=distance from centroid of section to inner surface of the inner cap = 2.25-0.25=-2.00. Negative because toward center of curvature.

$$f_r = \frac{mA'}{t_w A R_c (R_c + y)}\left(1 - \frac{Z'}{Z}\right) = \frac{-31333(0.5625)}{0.25(2.125)(4.25)(4.25 - 2.00)}\left(1 - \frac{1.002}{0.217}\right) = 12551psi$$

Calculate radial stress at ultimate load. Use actual cross section (not effective cross section) and Equation 6.2.5-11

$$f_r = \frac{mA'}{t_w A R_c (R_c + y)}\left(1 - \frac{Z'}{Z}\right) = \frac{-47000(0.5625)}{0.25(2.125)(4.25)(4.25 - 2.00)}\left(1 - \frac{1.002}{0.217}\right) = 18826psi$$

Calculate the Limit Load Ratios	$R_r = \frac{f_r}{F_{ty-S}} = \frac{12551}{54000} = 0.23$	R_r=0.23 (limit)
Calculate the Yield margin of safety per "no yield at Limit" criteria…Radial Stress	$M.S. = \frac{1}{R_r} - 1 = \frac{1}{0.232} - 1 = 3.31$	M.S. =3.31 (Yield)

Copyright 2016 Lockheed Martin Corporation.
Note: The current version is always the version on the Lockheed Martin network.

Calculate the Ultimate Load Ratios		$R_r = \frac{f_r}{F_{tu-S}} = \frac{18826}{63900} = 0.29$	R_r=0.29 (Ultimate)
Calculate the Ultimate Margin of Safety…Radial Stress		$M.S. = \frac{1}{R_r} - 1 = \frac{1}{0.29} - 1 = 2.45$	M.S. = 2.45(Ultimate)
Calculate the transverse-circumferential-radial stress interaction: Yield, Pt B	Circumferential + Axial (Axial Load is 0)	$R_{b-cap} = \frac{f_{b-cap}}{F_{ty-L}} = \frac{19128}{63000} = 0.30$ $R_{n1} = R_b + R_A = R_{b-cap} = 0.30$	R_{n1}=0.30
	Transverse	$R_{n2} = R_{b-tr} = 0.52$	R_{n2}=0.52
	Radial	$R_{n3} = R_r = 0.23$	R_{n3}=0.23
	Interaction Equation (Triaxial Tension) Equation 6.2.5-25	$R_{bar} = [(R_{n1} - R_{n2})^2 + (R_{n2} - R_{n3})^2 + (R_{n1} - R_{n3})^2]^{1/2} = [(0.30 - 0.52)^2 + (0.52 - 0.23)^2 + (0.30 - 0.23)^2]^{1/2} = 0.37$	R_{bar}=0.37
Transverse-Circumferential-Radial Margin of Safety		$M.S. = \frac{\sqrt{2}}{R_{bar}} - 1 = \frac{\sqrt{2}}{0.37} - 1 = 2.82$	M.S.=2.82 Yield
Calculate the transverse-circumferential-radial stress interaction: Ultimate, Pt B	Circumferential + Axial (Axial Load is 0)	$R_{b-cap} = \frac{f_{b-cap}}{F_{tu-L}} = \frac{28692}{73000} = 0.39$ $R_{n1} = R_b + R_A = R_{b-cap} = 0.39$	R_{n1}=0.39
	Transverse	$R_{n2} = R_{b-tr} = 0.69$	R_{n2}=0.69
	Radial	$R_{n3} = R_r = 0.30$	R_{n3}=0.30
	Interaction Equation Triaxial Tension Equation 6.2.5-25	$R_{bar} = [(R_{n1} - R_{n2})^2 + (R_{n2} - R_{n3})^2 + (R_{n1} - R_{n3})^2]^{1/2} = [(0.39 - 0.69)^2 + (0.69 - 0.29)^2 + (0.39 - 0.29)^2]^{1/2} = 0.51$	R_{bar}=0.51
Transverse-Circumferential-Radial Margin of Safety		$M.S. = \frac{\sqrt{2}}{R_{bar}} - 1 = \frac{\sqrt{2}}{0.51} - 1 = 1.77$	M.S.=1.77 Ultimate

Margins of Safety Summary

Failure Mode	Location	Yield	Ultimate
Circumferential Bending	Point A	1.85	1.22
Transverse and Circumferential Bending(with Axial) Interaction	Point A	0.32	0.01
Radial Stress	Point B	3.31	2.45
Transverse and Circumferential Bending(with Axial) and Radial Stress Interaction	Point B	2.82	1.77

The most critical margin is the extreme fiber on the inner cap with a 0.01 margin of safety due to the interaction of the tension circumferential stress and the compression transverse bending stress of the flange.

In this case, neither the radial stress nor the interaction between the radial stress and the other cap stresses is critical, however if the radial stresses were opposite in direction, then the web would be in compression due to the radial stresses and could be critical for buckling.

As a comparison calculate the web radial stresses per Section 6.2.5.3.2

Calculate P Equation 6.2.5-14	$P = \frac{m}{h} = \frac{47000}{4.5 - 2\left(\frac{0.25}{2}\right)} = 11059\ lbs$	P=11059 lbs

Copyright 2016 Lockheed Martin Corporation.
Note: The current version is always the version on the Lockheed Martin network.

Calculate w_I per Equation 6.2.5-15	$w_I = \frac{P}{R_{c-I}} = \frac{11059}{2.125} = 5204 lb/in$	w_I=5204 lb/in
Calculate $f_{r,I}$ per Equation 6.2.5-17	$f_{r,I} = \frac{w_I}{t_w} = \frac{5204}{0.25} = 20816 psi$	$f_{r,I}$=20816 psi
Compare to result calculated from Equation 6.2.5-11: f_r=18826 psi	Percent Difference: $Pct = \frac{(20816 - 18826)}{8826} \cdot 100 = 10.6$	Approximate solution in this case is about 11% conservative.

6.3 Plastic Bending Analysis

6.3.1 Introduction

Plastic bending analysis takes advantage of the nonlinear structural behavior peculiar to beams manufactured of ductile materials. These members generally achieve much greater bending strength than predicted from linear beam bending analysis using tensile ultimate strength, F_{tu}. Under conventional beam bending theory in which plane sections before a bending load is applied remain planar after the load is applied, a linear distribution of stress and strain in the elastic range results. Beyond the proportional limit of the material, however, the strain distribution is assumed to remain linear, but the stress distribution corresponds with the stress-strain relationship for the material. An approximation of this distribution allows the analyst to predict the effects of shape and material properties on the bending capability of the part. It should be noted that while a fictional stress, called the bending modulus of rupture, is calculated and exceeds F_{tu}, it is merely a mathematical convenience. The actual stress in the part never exceeds F_{tu}.

- Plastic bending analysis theory has been validated by testing (References 6-17 and 6-18) and, as detailed in this methodology, yields slightly conservative results except where noted; however, some military and civilian customers prefer that it not be used.
- The analyst should also be cautioned that when this type of analysis is performed, one is using the full strength of the section and if loads should increase at a later date or boundary conditions or criteria change, there is nothing to fall back on to achieve further capability in the structure. **Thus, use in initial design should be carefully contemplated.**
- Many aircraft criteria documents have a proviso against detrimental deformation at limit load or yielding at some percentage of limit load. When plastic bending theory is used, checks should also be made at limit to ensure that the applicable criteria are still being satisfied.
- Generally, plastic bending is limited to the analysis of those load conditions which do not influence the fatigue life of the structure.

6.3.1.1 Theoretical Overview

A brief overview of the theory behind plastic bending is given in this section to introduce some of the terms used in the analysis. For the full derivation of this theory, see Reference 6-14, *Bending Strength in the Plastic Range*, by Frank Cozzone.

The approach taken for plastic bending analysis is to assume a trapezoidal bending stress distribution, which approximates the actual stress-strain distribution for the particular cross section and material being analyzed. This is illustrated in the shaded area of Figure 6.3.1-1 (b). The equivalent trapezoidal stress distribution is shown at Section A-A Figure 6.3.1-1 (a).

Copyright 2016 Lockheed Martin Corporation.
Note: The current version is always the version on the Lockheed Martin network.

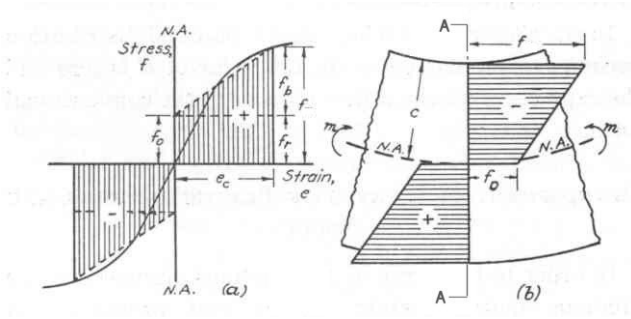

Figure 6.3.1-1 Trapezoidal Stress Distribution

The total moment of resistance *m* of the section can be expressed as

$$m = m_t + m_r$$ **Equation 6.3.1-1**

Where
m_r= moment of resistance produced by the rectangular distribution : $m_r = 2 f_o Q$
m_t= moment of resistance produced by the triangular distribution : $m_t = (f - f_o)I/c$
I is the moment of inertia about the bending neutral axis (in^4)
c is the distance from the neutral axis to the extreme fiber (in)
Q is the static (first) moment about the neutral axis of the total area above or below the neutral axis (in^3)

By substituting for m_r and m_t in Equation 6.3.1-1 and regrouping terms, the following equation can be obtained

$$(mc/I)_b = f + f_o(k-1)$$ **Equation 6.3.1-2**

Where
$(mc/I)_b$ is the measure of the moment of resistance of the section (psi)
f is the maximum bending stress at the extreme fiber. It can never exceed F_{tu}. (psi)
f_o is the trapezoidal intercept stress. It also represents the maximum stress of the assumed rectangular stress distribution (psi)
k is the section factor = 2Q/(I/c)

The term $(mc/I)_b$ is also referred to as the bending modulus of rupture when computed at the ultimate strength of the material and as the bending modulus when calculated at stress levels below F_{tu}. The section factor, *k*, is dependent only on the shape of the cross section and will be discussed in Section 6.3.1.2.

6.3.1.2 Analysis Limitations, Scope, Guidelines and Geometry Definitions

The method outlined in this section, along with the legacy Lockheed SM53 method, Reference 6-1, and the GD/Convair SRG-25 method, Reference 6-13, are all based on the Cozzone paper, Reference 6-14, and the results have been found to be equivalent. Plastic bending analysis, as presented below, does have technical limitations. Specifically:

- It assumes symmetrically identical tension and compression stress-strain response. For most ductile metallic materials typically used in aircraft construction, this is a reasonable assumption.
- Beam sections must remain stable under axial compression load (i.e., no crippling or flange buckling); separate checks must be made to ensure stability using methods from Section 8.
- Solutions for unsymmetrical sections, and/or complex loading (combined moments, and/or axial and shear forces) can be approximated, however unless the hand methods account for the shift in the neutral axis that usually occur in unsymmetrical sections, results are un-conservative. Section

Copyright 2016 Lockheed Martin Corporation.
Note: The current version is always the version on the Lockheed Martin network.

6.3.3.1 addresses a technique for determining the shift in the neutral axis for an unsymmetrical section. IDAT/PLASBEND incorporates the neutral axis shift.

- Methods for the determination of the modulus of rupture using detailed, geometric and material nonlinear finite element analysis have not been validated for general use. However, results from detailed FEM can be used as applied moments for calculating margins of safety. Caution should be exercised when using nonlinear models for this and any analysis, since FE-based nonlinear models are sensitive to boundary conditions and modeling techniques and tend to be poorly validated. When coupled with plastic bending analysis they should be substantiated by component testing of the same configuration.
- The method outlined is also applicable to beams with holes present as long as the net section properties are used.

For plastic bending solutions for anything other than simple bending of symmetric sections, the analyst will need to decide the level of fidelity required for the solution. There are fairly simple, hand approximations available for unsymmetrical sections; however, more exact solutions can be achieved through the use of computer algorithms. This solution technique will be discussed in more detail in Section 6.3.6.3; however, it is an iterative solution that does not lend itself to hand or spreadsheet adaptation. The methods in this Section have been implemented in IDAT/PLASBEND and the analyst is encouraged to use it.

Figure 6.3.1-2 provides a flow diagram for the plastic bending analysis process. Please note that utilization of the plastic bending allowable is valid only if the cross section is stable (buckling, crippling, etc.) for any axial compression loads present. This should be checked using methods contained in Section 8. Also the analyst should take care to include all stresses present (*i.e.*, shear and axial loads) when calculating a combined margin of safety. Refer to Section 6.3.6 for combined stress margin calculations

Copyright 2016 Lockheed Martin Corporation.
Note: The current version is always the version on the Lockheed Martin network.

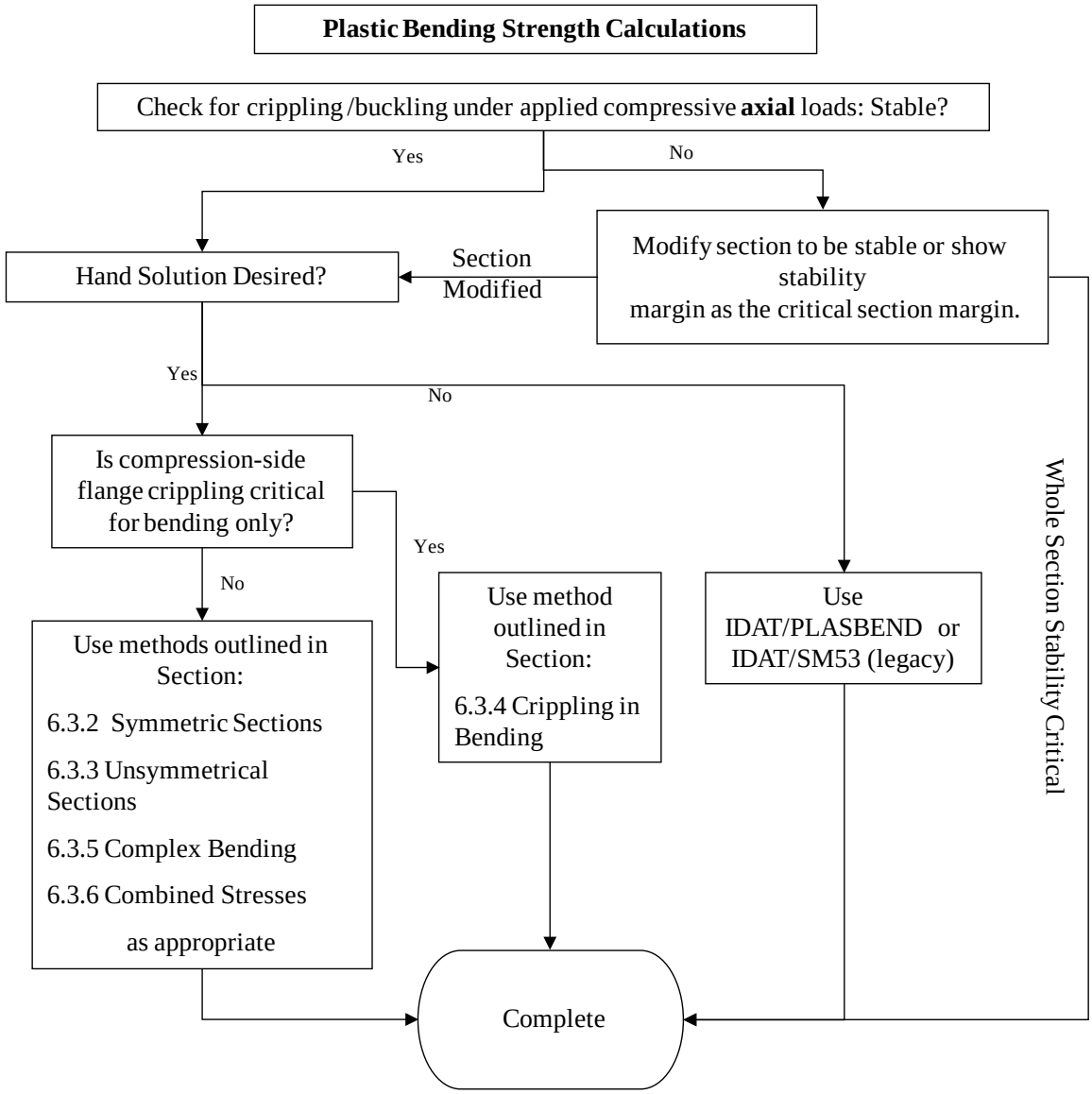

Figure 6.3.1-2 Flow Diagram - Plastic Bending Analysis

Irrespective of the complexity of the loading for a particular application, all plastic bending analyses start with the determination of the section factor, *k*. This factor indicates where the concentration of material is in the cross section under consideration and it is also an indicator of the degree of plasticity achievable. The further away the load carrying material is from the neutral axis, the smaller the value of *k* and the less the benefit from plastic bending. Table 6.3.1-1 tabulates the section factor for various standard shapes. It can be seen that at one extreme, for an I-beam with thick caps and a very thin web (i.e. all material is concentrated remotely to the neutral axis), $k=1.0$, and while this section is efficient for carrying bending loads elastically, no benefit can be achieved from a plastic bending analysis. At the other extreme is a diamond shape, where the material is concentrated at the neutral axis, which performs poorly when undergoing elastic bending but performs well when plastic bending is considered. For this section $k=2.0$.

Copyright 2016 Lockheed Martin Corporation.
Note: The current version is always the version on the Lockheed Martin network.

Table 6.3.1-1 Typical Values of Section Factor, k, for Standard Shapes

Section	Flanges only	I-, C- or box-Section	Hour-glass	Rect-angle	Thin Tube	Thick Tube	Solid Round	Diamond
k	1.0	1 to 1.5	1.333	1.5	1.273	Equation 6.3.1-4	1.698	2.0
Example		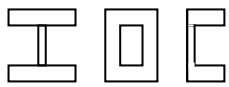			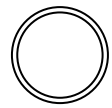	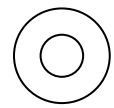	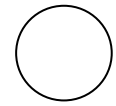	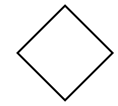
I				$bh^3/12$			$\pi D^4/64$	
c				h/2			D/2	
Q				$bh^2/8$			$D^3/12$	

If the geometry of a particular problem does not fit one of the standard shapes, it may be calculated, for symmetric shapes, from

$$k=2Q/(I/c) \qquad \textbf{Equation 6.3.1-3}$$

Where:
k is the section factor
Q is the first or static moment about the neutral axis of the area between the neutral axis and the extreme fiber. (in^3)
I is the moment of inertia of the entire section about the neutral axis (in^4)
c is the distance from the neutral axis to the extreme fiber. (in)

As an example of how the section factors are calculated, for a rectangle, from Table 6.3.1-1, the values for I, Q and c can be obtained. Substituting them into Equation 6.3.1-3

$$k=2Q/(I/c) = 2(bh^2/8) / [(bh^3/12)/(h/2)]$$
$$k = 2(bh^2/8)\,(h/2) / (bh^3/12)$$

Simplifying

$$k = (bh^3/8) / (bh^3/12)$$

Noting that the variables b and h divide to 1,

$$k = 12/8 = 1.5$$

The section factor should never exceed 2.0. If the value from the above equation is greater than 2.0, it could indicate the areas away from the neutral axis are thin and could be prone to crippling or buckling. If, after examining the section, it is a valid, reasonable section whose calculated *k* is greater than 2.0, *k* should be set to 2.0 for the remaining calculations.

The section factors for cylinders is given by[1]

$$k = \frac{4}{3\pi}\left[\frac{3\left(\frac{D}{t}\right)^3 - 6\left(\frac{D}{t}\right)^2 + 4\left(\frac{D}{t}\right)}{\left(\frac{D}{t}\right)^3 - 3\left(\frac{D}{t}\right)^2 + 4\left(\frac{D}{t}\right) - 2}\right] \qquad \textbf{Equation 6.3.1-4}$$

where
D is the outer diameter (in)
t is the thickness (in)

[1] Reference 6.3.9, Appendix D

Copyright 2016 Lockheed Martin Corporation.
Note: The current version is always the version on the Lockheed Martin network.

For a solid cylinder, *D/t=2* and *k=1.698*. For a thin walled, large diameter cylinder, *D/t > 5000*, the value for *k* is 1.273 as shown in Table 6.3.1-1.

To clarify the discussion contained in the following sections the following definitions of neutral and principal axes are now presented.

Definition	
Neutral Axes	The neutral axis is the intersection of the plane of zero bending stress and the cross section cut.
Principal Axes	A mutually perpendicular centroid axes, about which the moments of inertia are maximum and minimum and about which the product of inertia is zero.

In the discussions of symmetric sections, the neutral axis is also the principal axis. In unsymmetrical sections, the neutral axis in one or both planes may or may not be coincident with the principal axis.

6.3.2 Simple Bending of Symmetric Sections

The following section is applicable when the only load is an applied moment, which is parallel to a principal axis that also forms an axis of symmetry. This is the simplest application of plastic bending theory and provides a margin that correlates very closely to test results. To determine the margin of safety, first determine the Section Factor from Table 6.3.1-1 or Equation 6.3.1-3

Next the allowable moment M_{allow} should be calculated. Note that stress can no longer be used in the calculation of margin of safety since this analysis is not based on a linear stress distribution. The allowable resisting moment can be calculated, using the bending modulus, $(mc/I)_b$, from the following:

$$M_{allow} = (mc/I)_b \bullet (I/c)$$ **Equation 6.3.2-1**

Where
$(mc/I)_b$ is the bending modulus (psi)
I is the moment of inertia of the entire section about the neutral axis (in^4)
c is the distance from the neutral axis to the extreme fiber (in)

The bending modulus can be calculated from Equation 6.3.1-2, repeated here for convenience:

$$(mc/I)_b = f + f_o(k-1)$$ **Equation 6.3.2-2**

Where
f is the bending stress at the extreme fiber (maximum of F_{tu}) (psi)
f_o is the trapezoidal intercept stress from Equation 6.3.2-9
k is the section factor from Table 6.3.1-1 or Equation 6.3.1-3.

The analyst should note that the bending modulus is a fictitious stress used as a mathematical convenience to obtain the allowable bending moment. The actual fiber stress of the cross section never exceeds F_{tu}.

Copyright 2016 Lockheed Martin Corporation.
Note: The current version is always the version on the Lockheed Martin network.

Once the allowable bending stress, M_{allow}, has been calculated, the margin of safety may be obtained by:

$$M.S. = \frac{M_{allow}}{m_{appl}} - 1$$ **Equation 6.3.2-3**

Where
M_{allow} is the allowable moment (in-lb)
m_{appl} is the applied moment (in-lb)

A closed form solution for determining trapezoidal intercept stress, f_o, is developed in Reference 6-16. The equations below come from this derivation. It requires the material strain at ultimate, e_u, and the modified Ramberg-Osgood stress-strain curve shape parameter, n_t, described in Section 3.3.1.3, which are then used to calculate the plastic strain e_p. After calculating the plastic strain, the trapezoidal intercept stress, f_o, can be calculated. The equations below develop the more general case of plastic strain at a given stress and strain level, and the corresponding f_o for that stress level. If the analyst is interested in the ultimate f_o and Modulus of Rupture, then $f = F_{tu}$ and $e = e_u$, the resulting plastic strain $e_{p_{tu}}$ is at F_{tu}. At any level other than ultimate, if stress is known, the solution is a straightforward solution of the equations given below. If, however, only strain is known, an iterative solution will be required. This is outlined in Section 6.3.2.2 and 6.3.2.3 and illutstrated in several of the example problems in Section 6.3.8.

The plastic strain, e_p, at a given stress level f, is given as

$$e_p = e - f / E$$ **Equation 6.3.2-4**

Where
f is the bending stress at the extreme fiber (psi) (maximum of F_{tu}).
E is the modulus of elasticity (psi)
e is the strain at the location of the maximum stress, from Equation 6.3.2-7, (maximum value of the strain at ultimate stress of the material, e_u).

If, in the above equation, the plastic strain at ultimate stress is desired this equation becomes

$$e_{p_{tu}} = e_u - F_{tu} / E$$ **Equation 6.3.2-5**

At this point, determination of e_u, the strain at ultimate stress should be addressed. For some materials, this strain will be the same as the rupture strain of the material. For a few materials, which exhibit strain softening, this value must be obtained from the full range stress-strain curve at the point of maximum stress. Figure 6.3.2-1 shows an example of a material, PH13-8 Mo Stainless Steel, which exhibits significant strain softening. It is assumed that all materials which exhibit significant strain softening have full range stress-strain curves in Reference 6-4 or 6-5. If a full range stress-strain curve is available, e_u should be determined from this curve. For all other materials, it can be calculated from the following

$$e_u = e_o + (F_{tu} / E) \quad \text{for } e_o \le 0.05$$
$$e_u = 0.05 + (F_{tu} / E) \quad \text{for } e_o > 0.05$$ **Equation 6.3.2-6**

Where
e_u is the strain of the material at ultimate stress (in/in)
e_o is the material elongation (in/in) from Reference 6-4 or 6-5. If $e_o > 0.05$, it is limited to 0.05 for the calculation of e_u.
F_{tu} is the ultimate tensile stress of the material (psi).
E is the modulus of elasticity (psi)

Copyright 2016 Lockheed Martin Corporation.
Note: The current version is always the version on the Lockheed Martin network.

If the desired stress level is not at failure, the corresponding strain, *e*, may be calculated as

$$e = f / E + e_{p_{tu}} (f / F_{tu})^{n_t}$$ **Equation 6.3.2-7**

Where
f is the bending stress at the extreme fiber up to a maximum of F_{tu} (psi)
E is the modulus of elasticity (psi)
$e_{p_{tu}}$ is the plastic strain of the material at e_u calculated from Equation 6.3.2-5
n_t is the modified Ramberg-Osgood stress-strain shape parameter, from Equation 3.3.1-10

Section 3.3.1.3 develops the modified Ramberg-Osgood parameter for use in predicting the stress-strain curve to ultimate stress. Equation 3.3.1-10 is repeated here, for convenience.

$$n_t = log(e_{p_{tu}} / 0.002) / log(F_{tu} / F_{ty})$$ **reference Equation 3.3.1-10**

Where
F_{tu} is the ultimate bending stress (psi)
F_{ty} is the yield bending stress (psi)
$e_{p_{tu}}$ is the plastic strain at e_u calculated from Equation 6.3.2-5.

Note that the calculation of n_t occurs only once for a given material and always uses F_{tu}, F_{ty}, and $e_{p_{tu}}$.

Finally, given all of the intermediate values shown in Equations 6.3.2-4 through Equations 6.3.2-7, f_o can be calculated from the following equation for any given stress or strain level:

$$f_o = \frac{6f}{e^2}\left[\frac{f^2}{3E^2} + \left(\frac{e_p f}{E}\right)\frac{(n_t+1)}{(n_t+2)} + \frac{n_t e_p^2}{(2n_t+1)}\right] - 2f$$ **Equation 6.3.2-8**

Where
f is the stress at the extreme fiber being analyzed. Maximum value is F_{tu} (psi).
e is the strain at the fiber being analyzed, calculated from Equation 6.3.2-7, with a maximum value of e_u.
E is the modulus of elasticity (psi).
n_t is the modified Ramberg-Osgood stress-strain shape parameter from Equation 3.3.1-10.
e_p is the plastic strain at f, calculated from Equation 6.3.2-4.

If, in Equations 6.3.2-4, 6.3.2-6 through 6.3.2-8 the values for *f*, *e* and e_p are at yield levels for the material, then the bending modulus at yield may be calculated. If the values are at any other arbitrary stress level above the proportional limit of the material, the bending modulus for that stress level may be calculated.

If, similarly, $f = F_{tu}$, $e = e_u$, and $e_p = e_{ptu}$, then the resulting trapezoidal intercept stress, f_o at ultimate can be calculated as shown in Equation 6.3.2-9 and may be used in Equation 6.3.2-2 to calculate the bending modulus of rupture.

$$f_o = \frac{6F_{tu}}{e_u^2}\left[\frac{F_{tu}^2}{3E^2} + \left(\frac{e_{p_{tu}} F_{tu}}{E}\right)\frac{(n_t+1)}{(n_t+2)} + \frac{n_t e_{p_{tu}}^2}{(2n_t+1)}\right] - 2F_{tu}$$ **Equation 6.3.2-9**

Where, for a given material,
F_{tu} is the ultimate tensile strength of the material (psi).
e_u is the strain of the material at ultimate stress from the full range stress-strain curve or Equation 6.3.2-6
E is the modulus of elasticity (psi).
n_t is the modified Ramberg-Osgood stress-strain shape parameter from reference Equation 3.3.1-10.
$e_{p_{tu}}$ is the plastic strain at e_u, calculated from Equation 6.3.2-5.

Copyright 2016 Lockheed Martin Corporation.
Note: The current version is always the version on the Lockheed Martin network.

In many analyses, the analyst will likely calculate f_o and e_p only at ultimate to obtain the bending modulus of rupture. The usefulness of the ability to calculate these values at other stress levels will become apparent in the section on un-symmectric sections. An example of the simple bending analysis of a symmetric section is provided in Section 6.3.8.1.

Figure 6.3.2-1 contains some sample stress-strain curves to illustrate some of the issues related to plastic bending calculations, the definition of e_u and the stress-strain curve. In each of the figures, there are at least three curves: the Mil-Hdbk-5[1] data from a full range stress-strain curve, a curve calculated using the strain at maximum stress for e_u, and a curve calculated using $e_u = e_o + F_{tu}/E$ where e_o is limited to a maximum of 0.05. In addition, where appropriate, there is also a curve calculated using the rupture strain for e_u.

Curve Set A is for 2024-T3 Aluminum Extrusion. This material's stress-strain curve continues to increase until the material ruptures. It shows no signs of strain softening and when a full range stress-strain curve is not supplied in Mil-Hdbk-5[1], this is the shape that is assumed. For this particular material, with a full range stress-strain curve supplied, the modulus of rupture would use strain at maximum stress, which in this case is also the rupture strain. The other value is shown for discussion purposes. Note that while using the cutoff elongation of 0.05 to calculate strain doesn't quite match the shape of the stress-strain curve, it yields a conservative modulus of rupture. Use of this cutoff is done for materials without a full range stress-strain curve to ensure there is no hidden strain softening which might unconservatively affect the modulus of rupture. Finally, this curve emphasizes the match of the modified Ramberg-Osgood formulation in matching the curve at yield and around and at ultimate, which is the regime of most interest in plastic bending calculations.

Curve Set B is for Titanium 6AL-4V. This material exhibits some minor strain softening at high stress levels. Note what happens to the calculated stress-strain curve if it is calculated using the rupture strain rather than the strain at maximum stress. For this material, again with a full range stress-strain curve, the modulus of rupture would be calculated using the strain at maximum stress. Note that in this case, making the calculation using $e_u = e_o + F_{tu}/E$ where e_o is limited to a maximum of 0.05 also results in a curve which matches the original Mil-Hdbk-5 curve quite well and an allowable only slightly less than the calculation based on strain at maximum stress. Thus, if a material, with some strain softening, did not have a full range stress-strain curve a reasonable value for the modulus of rupture would still be obtained by using the elongation.

Curve Set C is for PH13-8 Mo, H1000 Steel. This material exhibits a high degree of strain softening. Fortunately, this type of stress-strain behavior tends to be limited to certain steels, but does warrant special treatment. For a material with these characteristics, a full range stress-strain curve must be used for the calculation of the modulus of rupture. This curve shows similar, but significantly more pronounced trends than Curve Set B. Using the rupture strain for e_u results in an obviously unconservative representation of the stress-strain curve. Because of the high degree of strain softening, using the elongation formulation is also unconservative. Note the moduli of rupture for both of these approaches are similar in magnitude, but significantly higher than the value calculated using strain at maximum stress for e_u. In addition to these differences in analytic approach, *i.e.*, using strain at ultimate stress in lieu of elongation for the determination of the modulus of rupture, it is recommended that for these types of high strength materials, component testing be included as part of the verification process. A table of these materials is shown in Section 3 of PM4057.

[1] Reference 6-5 or MMPDS, Reference 6-4

Copyright 2016 Lockheed Martin Corporation.
Note: The current version is always the version on the Lockheed Martin network.

Curve Set A

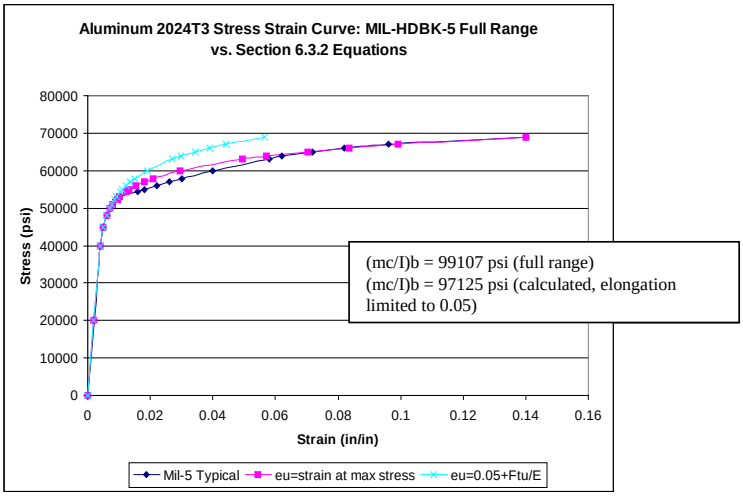

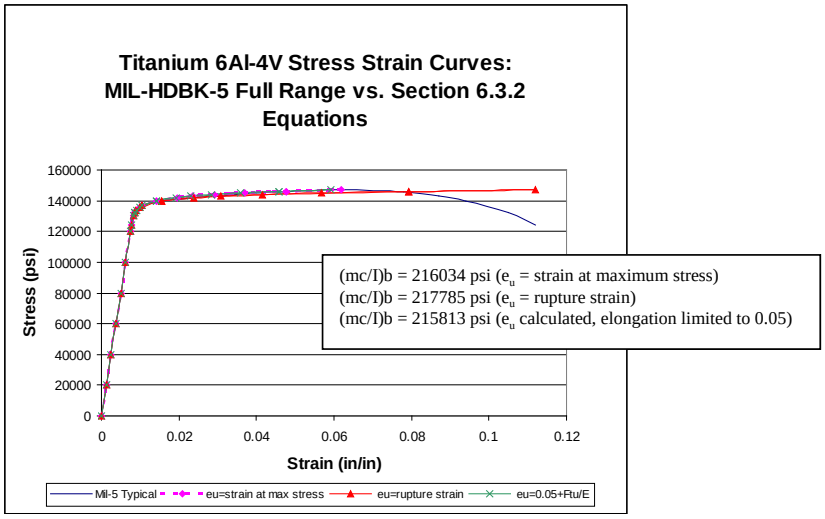

Curve Set B

Curve Set C

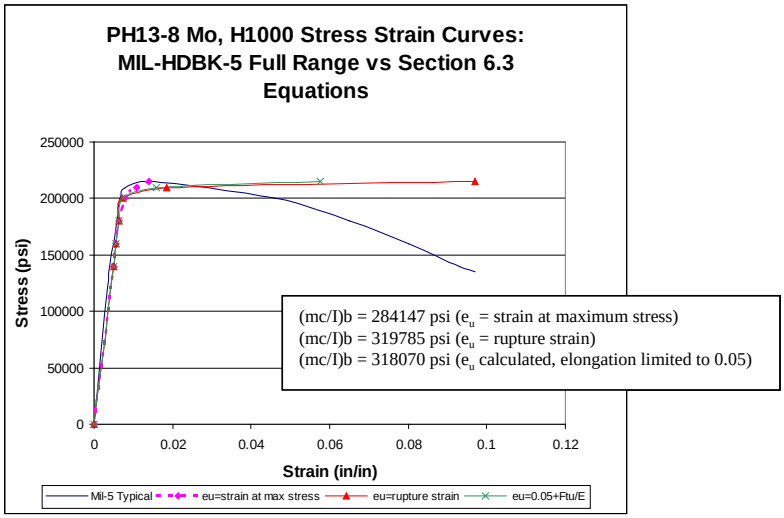

Figure 6.3.2-1 Stress-strain Curve Comparisons

Copyright 2016 Lockheed Martin Corporation.
Note: The current version is always the version on the Lockheed Martin network.

Table 6.3.2-1 provides the bending modulus of rupture for typical aerospace materials for a symmetrical section with a section factor of 1.5. It also provides the trapezoidal intercept stress, f_o, for these materials. It is a representative collection of materials to give the analyst some typical values. The analyst should always calculate the modulus of rupture for the particular application. To aid in this IDAT/PLASBEND reports the value of the trapezoidal intercept stress. Note that for any of these materials for which the elongation, e_o, exceeds 0.05, it is limited to 0.05 for the purpose of calculating the modulus of rupture. See Equation 6.3.2-6 for explanation.

Table 6.3.2-1 Bending Modulus of Rupture for Selected Materials at k=1.5 at F_{tu}

Material	Alloy	Temper	Form	Thick/ Area	Grain	Basis	F_{tu} (ksi)	F_{ty} (ksi)	E (ksi)	e_o	γ	f_o (psi)	$(mc/I)_b$: k=1.5 (psi)
Aluminum	2024	T351	Bare Plate	1.001-1.5	L,T	B	64	44	10700	0.07	0.803	51385	89693
Aluminum-Lithium	2090	T8E50	Plate	0.500-1.00	L,T	G	68	61	11200	0.03	0.900	61178	98589
Aluminum	2024	T851	Bare Plate	1.0-1.5	L,T	S	66	57	10400	0.05	0.910	60039	96020
Aluminum	7150	T77511	Bare Plate	1.5-3.0	L,T	S	82	75	10200	0.06	0.932	76419	120210
Aluminum	7075	T6	Die Forging	2.0-3.0	L	B	76	65	10000	0.07	0.899	68291	110146
Titanium	6AL-4V	STA	Plate	1.0-2.0	L,T	S	145	135	16000	0.06	0.936	135762	212881
Titanium	6AL-4V	STA	Extrusion	<0.500	L	B	163	147	16000	0.06	0.913	149311	237656
Steel	15-5PH	H1150	Bar and Frg	<=12D	L,T	S	135	105	28500	0.11	0.866	116968	193484
Steel	PH13-8MO	1000	Bar	<=8D	L,T	B	208	200	28300	0.10	0.842	175214	295607[1]
Steel	300M	280 ksi	Type A		L,T	S	280	230	29000	0.06	0.867	242759	401379
Steel	Alloy	180 ksi	Wrought		L,T	S	180	163	29000	0.10	0.935	168240	264120

From this survey of materials, it should be noted by the analyst, that the common shortcut way of estimating the allowable modulus of rupture of multiplying F_{tu} by the section factor, k, is ALWAYS unconservative and should not be used.

6.3.2.1 Stresses at an Intermediate Fiber – Simple Bending of Symmetric Section

Sometimes it is desirable to calculate the stress at an intermediate fiber of a cross section. Since stresses are not linear, this cannot be achieved by a simple ratio of the stresses.

Determine the stress of the extreme fiber and calculate the strain at that fiber using Equation 6.3.2-7. If the modulus of rupture is being used, for example, then the extreme fiber stress is F_{tu}. The strain at any other fiber may be determined by a linear ratio of the strain by the relative distances from the neutral axis.

$$e_i = (y_i/c)e_{fiber} \qquad \textbf{Equation 6.3.2-10}$$

Where
e_i is the strain at an intermediate fiber located at y_i (in/in)
y_i is the distance from the neutral axis to the fiber being analyzed (in)
e_{fiber} is the strain at the extreme fiber of the section being analyzed (in/in)
c is the distance from the neutral axis to the extreme fiber (in)

Because the stress is nonlinear due to the plasticity, the determination of the stress at this fiber location and strain, an iterative solution is required. Table 6.3.2-2 provides an outline of this iterative process. The method uses equations which have been introduced and described in detail in Section 6.3.1 and 6.3.2 of this manual. An example of this procedure is provided in Section 6.3.8.2.

[1] e_u = 0.014 from full range stress-strain curve, Figure 3.2.1-2

Copyright 2016 Lockheed Martin Corporation.
Note: The current version is always the version on the Lockheed Martin network.

Table 6.3.2-2 Iterative Process for Determination of Intermediate Fiber Stress

Process	Reference or Equation
Determine F_{tu}, F_{ty}, e_o, and E for material	Reference 6-4 or Reference 6-5 or material data sheets
Calculate the Proportional Limit, F_{tp}, of the material and the strain at that stress	Reference Section 3.3.1.4 : $F_{tp} = F_{ty}(0.05)^{(1/n)}$ and $e_{tp}=F_{tp}/E$
Calculate the intermediate fiber strain, e_i	Equation 6.3.2-10 $e_i = (y_i/c)e_{fiber}$
Is $e_i > e_{tp}$? If yes, proceed with calculation of material plasticity factors shown below If no, calculate the elastic stress at this location from $f = Ee_i$.	
Calculate e_{ptu} and n_t for material	Equation 6.3.2-6: $e_u= min[e_o,0.05] + (F_{tu}/E)$ Equation 6.2.2-5: $e_{p_{tu}}= e_u - F_{tu}/E$ Equation 3.3.1-10: $n_t=log(e_{p_{tu}}/0.002)/log(F_{tu}/F_{ty})$
Guess an intermediate fiber stress, f (maximum of F_{tu})	
Calculate strain, e	Equation 6.3.2-7: $e=f/E + e_{p_{tu}}(f/F_{tu})^{n_t}$
If $e = e_i$, then the intermediate fiber stresses is f If not, adjust guess for f and recalculate e.	

6.3.2.2 Determination of Fiber Stress for an Applied Moment on a Symmetric Section

It is often necessary to determine the actual extreme fiber stress for a given applied moment in a section undergoing plastic bending. This, again, requires an iterative solution since strains in this regime are linear while stresses are not. The method described in Table 6.3.2-3 can be used if the section is symmetric and the stress-strain curves for compression and tension are approximately the same. If either of these conditions is not met then the problem must be treated as an unsymmetrical section per Section 6.3.3.2.

Table 6.3.2-3 describes the process for determining the extreme fiber stress for a given applied moment. The method uses equations which have been introduced and described in detail in Section 6.3.1 and 6.3.2 of this manual. This method can also be used to construct a total section moment and extreme fiber stress versus strain curve as shown in Figure 6.3.3-2. To construct such a curve, choose stress levels at uniform increments between the proportional limit and ultimate strength of the material and determine the strain and moment for each of these stress levels.

Table 6.3.2-3 Iterative Process for Determination of Extreme Fiber Stress for Symmetric Section

Process	Reference or Equation
Given the total section moment of inertia, I, and the distance, c, to the outer fibers from the centroid.	
Calculate plastic bending section factor, k	Equation 6.3.1-3
Determine F_{tu}, F_{ty}, E, and e_o, for material	Reference 6-4 or Reference 6-5 or material data sheets
Calculate e_{ptu} and n_t for material	Equation 6.3.2-6: $e_u= min[e_o,0.05] + (F_{tu}/E)$ Equation 6.3.2-5: $e_{ptu}= e_u - F_{tu}/E$ Equation 3.3.1-10: $n_t=log(e_{ptu}/0.002)/log(F_{tu}/F_{ty})$
Assume an extreme fiber stress, f and calculate strain, e	Equation 6.3.2-7: $e=f/E + e_{p_{tu}}(f/F_{tu})^{n_t}$
Calculate plastic strain, e_p for assumed stress	Equation 6.3.2-4: $e_p=e - f/E$
Calculate the trapezoidal intercept stress, f_o, for assumed stress	Equation 6.3.2-8: $f_o = \frac{6f}{e^2}\left[\frac{f^2}{3E^2} + \left(\frac{e_p f}{E}\right)\frac{(n_t+1)}{(n_t+2)} + \frac{n_t e_p^2}{(2n_t+1)}\right] - 2f$
Calculate the section bending modulus, $(mc/I)_b$	Equation 6.3.2-2: $(mc/I)_b= f+f_o(k-1)$
Calculate the moment	Equation 6.3.2-1: $m_{appl\text{-}calc}=(mc/I)_b \bullet (I/c)$

Copyright 2016 Lockheed Martin Corporation.
Note: The current version is always the version on the Lockheed Martin network.

If the actual applied moment is equal to the calculated moment then the assumed fiber stress is the applied fiber stress or if $m_{appl} = m_{appl\text{-}calc}$, then the extreme fiber stresses is f
If not, adjust assumed value for f and recalculate $m_{appl\text{-}calc}$.

6.3.2.3 Simple Bending of a Symmetric Section with Shear

The shear stress distribution corresponding to a trapezoidal bending distribution will be somewhat different than the classical $f_s=VQ/It$ formulation. Reference 6-23 derives a modified expression for shear stress which may be written as

$$f_s = C_{shear}\left(\frac{VQ}{It_1}\right) \qquad \textbf{Equation 6.3.2-11}$$

where
C_{shear} is the shear peaking factor given by Equation 6.3.2-14.
V is the applied transverse shear load (lbs)
Q is the first or static moment about the whole section neutral axis of the area between the analysis point and the extreme fiber (in^3)
I is the moment of inertia of the entire section about the neutral axis (in^4)
t_1 is the thickness of the subsection at the point of analysis (in)

The shear peaking factor, C_{shear}, is calculated from a geometric factor and a factor which represents the degree of plasticity exhibited by the applied loading. The geometric factor, k_{inv}, is given by

$$k_{inv} = (I / y_1)/(2Q) = c/(y_1 k) \qquad \textbf{Equation 6.3.2-12}$$

where
k is the section factor derived in Equation 6.3.1-3
Q is the first or static moment about the neutral axis of the area between the analysis point and the extreme fiber (in^3)
I is the moment of inertia of the entire section about the neutral axis (in^4)
c is the distance from the neutral axis to the extreme fiber (in)
y_1 is the distance from the neutral axis to the centroid of the subsection for which the shear stress is calculated

Figure 6.3.2-2 illustrates the difference in shear distribution theories in a rectangular section which is fully plastic. The shear flow is analyzed as the maximum of $[VA / \{(y_1+y_2)A_{1\ or\ 2}\}$ –OR- $VQ/I]$.

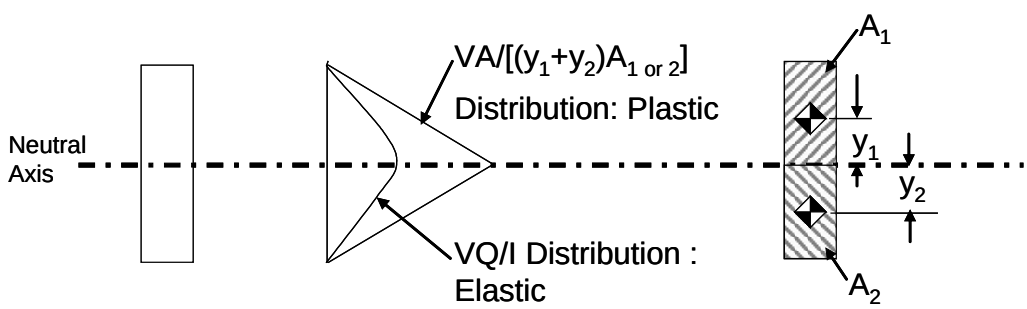

Figure 6.3.2-2 Shear Distribution in a Typical Rectangular Section

Copyright 2016 Lockheed Martin Corporation.
Note: The current version is always the version on the Lockheed Martin network.

The degree of plasticity is a measure of how far into the plastic regime the cross section is. It utilizes the triangular elastic stress distribution, even though its magnitude may exceed F_{tu}, and it does not represent the real stress at the outer fiber. It is comparable to the modulus of rupture. The degree of plasticity is given by

$$k_{plas} = (f-F_{tp})/[(mc/I)_{b\text{-}ult} - F_{tp}] \geq 0.0 \qquad \textbf{Equation 6.3.2-13}$$

$$\text{If } k_{plas} < 0.0, \text{ then } k_{plas} = 0.0$$

$$\text{If } f > (mc/I)_{b\text{-}ult}, \text{ then } k_{plas} = 1.0$$

where

f is the applied bending stress at the extreme fiber calculated from f=mc/I. This value may exceed F_{tu} but not the modulus of rupture (psi).

F_{tp} is the proportional limit stress of the material and calculated per Section 3.3.1.4 (psi).

$(mc/I)_{b\text{-}ult}$ is the modulus of rupture, *i.e.*, modulus of bending at F_{tu} (psi).

The shear peaking factor is then given by

$$C_{shear} = 1+k_{plas}(k_{inv}-1)$$
$$1.0 \leq C_{shear} \leq k_{inv} \qquad \textbf{Equation 6.3.2-14}$$

where

k_{plas} is the degree of plasticity of the cross section given by Equation 6.3.2-13, 6.3.3-7, 6.3.6-22 or 6.3.6-26

k_{inv} is the section geometric factor given by Equation 6.3.2-12

If k_{plas} of Equation 6.3.2-13 is less than zero, it is set to zero, resulting in $C_{shear} = 1.0$ and effectively reducing the shear stress calculation to f_s=VQ/(It) with no shear peaking required. This occurs below the proportional limit of the material. For a fully plastic section, where $k_{plas} = 1.0$, $C_{shear} = k_{inv}$.

Once the shear and bending stresses have been calculated, the margin can be obtained from interaction equations. Section 6.3.6 provides methods for interactions of various types of loading.

6.3.2.4 Special Case – Bending Strength of Round Tubing

Bending tests on tubes shows that failure occurs in one of 4 failure modes depending on the ratio of the diameter-to-wall-thickness.

- Solid circular sections and thick wall tubes, in the range of *D/t =2.0* (solid sections) to approximately *D/t= 10.0* fail in bending as described in Section 6.3.2.1, that is, without any instability in the wall.
- For *D/t* ranges of approximately 10 to 20, the failure occurs due to plastic bending with a local instability in the wall in the form of a single transverse fold.
- For tubes in the *D/t* range of approximately 20 to 2000 the failure is a plastic instability in the form of one or more inward diamond shaped buckles. At the lower end of the range the failure is in the plastic range while at the higher end the plasticity is localized.
- In aerospace applications, *D/t* ranges greater than 2000 are not practically used and is not addressed in this section; however, the failure is in elastic instability in the form of one or more inward buckles.

The exact boundaries of the failure regions are a function of the material properties and, for some geometries, the initial imperfections or irregularities in the surface. The effects of irregularities are negligible in the failures in Regions 1 and 2 but are important and accounted for in Region 3.

The modulus of rupture for Region 1 is as calculated in Section 6.3.1.1. In Regions 2 and 3 the modulus of rupture is calculated in the same manner as described in Section 6.3.1.1, Equation 6.3.1-2, using Equation 6.3.2-8 for f_o, the trapezoidal intercept and Equation 6.3.1-4 for *k* for the cylinder; however, the maximum stress is limited to the critical plastic buckling stress, f_{cr}, not F_{tu}.

Copyright 2016 Lockheed Martin Corporation.
Note: The current version is always the version on the Lockheed Martin network.

The critical buckling stress is given as

$$f_{cr} = k_o \eta \frac{E}{\left(\frac{D}{t} - 1\right)} \sqrt{\frac{1}{3(1-\nu^2)}} \qquad \textbf{Equation 6.3.2-15}$$

where
k_o is a correlation parameter given in Equation 6.3.2-17
η is the plasticity correction factor given in Equations 6.3.2-18 or 6.3.2-19, depending on region
E is the elastic modulus (psi)
D is the outer diameter of the cylinder (in)
t is the thickness of the cylinder (in)
ν is the plastic Poisson's ratio, taken as 0.5 for all metals

The correlation parameter, k_o, is loosely related to the initial diametrical imperfections in the thin walled cylinder including tolerances and allowable dents. It does not affect the bucking strength in Regions 1 or 2 but can reduce the critical strength in Region 3. The diametrical imperfections, ξ_o, as allowed by tube specifications are a function of diameter and thickness as well as the ratio of diameter to thickness. To correlate to tube modulus of rupture test results, the imperfections are modeled as a linear relationship[1] given as

$$\xi_o = C\left(\frac{D}{t} - 1\right) \qquad \textbf{Equation 6.3.2-16}$$

where
C is a coefficient which may vary with manufacturing technique and material
D is the outer diameter (in)
t is the thickness (in)

The coefficient, *C*, was varied from 0.0025 to 0.0075 to provide best correlation to test results for tubes in bending and provides reasonable predictions of failure when *C=0.005* for aluminum, titanium and steel tubes typically used on aircraft. The IDAT/SM101 program to predict the modulus of rupture in round tubes uses *C=0.005* for all materials.

This results in a correlation parameter given as

Region 1:	*not applicable*
Region 2:	$k_o=1.0$
Region 3:	$k_{o-3} = Maximum\left[0.405, \frac{0.348}{\xi_o^{(1/3)}}\right]$
	k_o=Minimum [k_{o-3}, 1.0]

Equation 6.3.2-17

The buckling plasticity correction factor is given by

Region 1: *Not applicable*

Region 2: $$\eta_2 = \frac{E_{sec}}{E}\left[0.352 + 0.648\sqrt{\left(0.25 + 0.75\frac{E_{tan}}{E_{sec}}\right)}\right] \qquad \textbf{Equation 6.3.2-18}$$

Region 3: $$\eta_3 = \frac{E_{sec}}{E}\left[0.143 + 0.857\sqrt{\left(0.25 + 0.75\frac{E_{tan}}{E_{sec}}\right)}\right] \qquad \textbf{Equation 6.3.2-19}$$

where
η_2 is derived from reduced modulus given in Section 3, Equation 3.2.2-4
η_3 is from Reference 6-21 for diamond shaped buckles
E_{sec} is the secant modulus given by Equation 3.3.1-4 or 3.3.1-9
E_{tan} is the tangent modulus given by Equation 3.3.1-3 or 3.3.1-8

[1] Reference 6-21

Copyright 2016 Lockheed Martin Corporation.
Note: The current version is always the version on the Lockheed Martin network.

The plasticity correction is a function of stress and the critical buckling stress is a function of the plasticity correction and the D/t ratio so the determination of the critical buckling stress requires an iterative solution. Once the critical buckling stress is determined, the trapezoidal intercept stress can be calculated using the critical buckling stress in Equation 6.3.2-8 and Equation 6.3.1-2 can be used to calculate the allowable modulus of rupture.

IDAT/SM101 performs the solution by assuming a stress level between 0 to F_{tu}, evaluating the tangent and secant moduli, calculating the D/t resulting from this stress level, then calculating the section factor, trapezoidal intercept and modulus of rupture. It repeats this calculation for each critical stress level for each failure region. The program then constructs the final curve by taking the lowest resulting composite curve and provides a single curve of Bending Modulus of Rupture versus D/t by material. Figure 6.3.2-3, left figure, shows an example of the solution for each of the regions with the IDAT/SM101 points shown as asterisks while Figure 6.3.2-3, right figure, shows the comparable IDAT/SM101 allowables curve

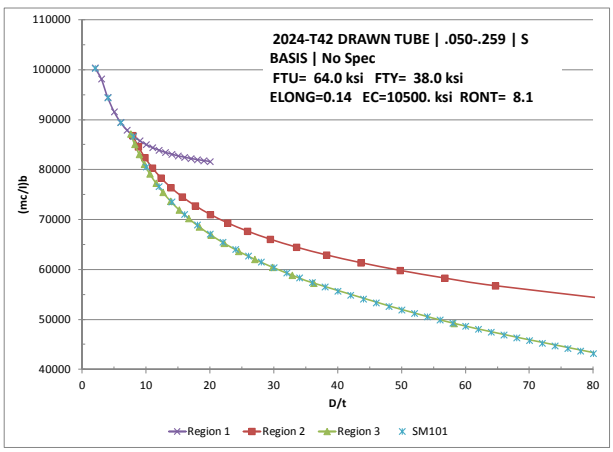

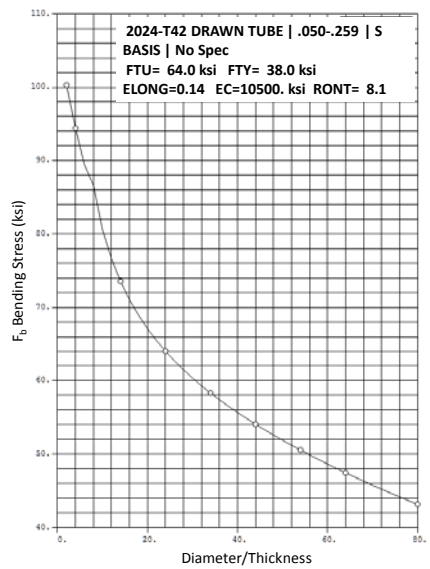

Figure 6.3.2-3 Sample of Region 1, 2, and 3 Curves for 2024-T42 Drawn Tube with Corresponding IDAT/SM101Allowable Curve

6.3.3 Simple Bending of Unsymmetrical Sections

This method is applicable when the only load is a resultant applied moment vector, which is parallel to a neutral axis that is not an axis of symmetry. It is important, with non-symmetric sections, to use the plastic neutral axis rather than the principal axis. If the principal axes are used, the results may be unconservative. Section 6.3.3.1 will discuss how to calculate the required shift from the principal to the plastic neutral axis.

To determine the allowable moment in an unsymmetrical section, the section is split into two parts about the neutral axis for the calculation of the allowable. The allowable is determined for each subsection and then the two allowables are summed for a total section allowable. This is illustrated in Figure 6.3.3-1.

Copyright 2016 Lockheed Martin Corporation.
Note: The current version is always the version on the Lockheed Martin network.

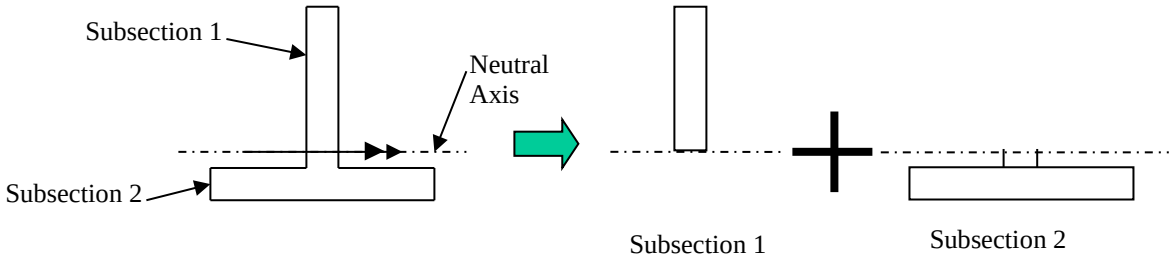

Figure 6.3.3-1 Unsymmetrical Section Example

For each subsection, compute *Q*, *I*, and *I/c* about the neutral axis of the original section. Remember *c* will be from the neutral axis of the original section to the extreme fiber of each subsection. If the subsections contain holes, use the net section in the above calculation.

Then determine $k_{subsection}$ for each of the 2 subsections using Table 6.3.1-1 or the equation below. Equation 6.3.1-3 is modified because *Q* is being calculated for each subsection at ½ *I*,

$$k_{subsection}=Q/(I_1/c)$$ **Equation 6.3.3-1**

Where:
$k_{subsection}$ is the section factor of the subsection
Q is the first or static moment about the whole section neutral axis of the area between the neutral axis and the extreme fiber (in^3)
I_1 is the moment of inertia of the subsection about the whole section neutral axis (in^4)
c is the distance from the whole section neutral axis to the extreme fiber of the subsection (in)

Once the two section factors, $k_{subsection}$, have been determined, the method outlined in Section 6.3.2 is modified to determine M_{allow} for each subsection. For the subsection with the larger *c*, Equations 6.3.2-1 through 6.3.2-8 are used in the same manner to obtain $M_{allow\text{-}larger}$ as for the symmetric section calculations using *I*, *Q*, and $k_{subsection}$ calculated in the preceding paragraph, *i.e.*, the subsection geometric properties about the total section neutral axis.

For the subsection with the smaller *c*, a method similar to that of finding the stress at an intermediate fiber, discussed in Section 6.3.2.1, is used. Factor the extreme fiber strain of the subsection having the larger *c*, c_{larger}, by the ratio of $c_{smaller}$ / c_{larger}. Strains are ratioed because they remain linear while stresses do not.

$$e_{smaller_c} = (c_{smaller}/c_{larger})e_{larger_c}$$ **Equation 6.3.3-2**

Where
e is the strain at the outer fiber of the cross section (in/in)
c is the distance from the neutral axis to the outer fiber of the section (in)

If an allowable is being determined, then e_{larger_c} is the strain at F_{tu}, however these equations would be equally valid for calculating the strain due to the applied load. In that case, e_{larger_c} would be the strain due to an applied moment.

To facilitate the determination of the stress at this fiber location, the analyst must construct a stress-strain curve or perform an iterative solution. Table 6.3.3-1 provides an outline of this iterative process. The method uses equations which have been introduced and described in detail in Section 6.3.1 and 6.3.2 of this manual. An example of this procedure is provided in Section 6.3.8.2.

Copyright 2016 Lockheed Martin Corporation.
Note: The current version is always the version on the Lockheed Martin network.

Table 6.3.3-1 Iterative Process for Determination of Extreme Fiber Stress for Side with Smaller c for an Unsymmetrical Section.

Process	Reference or Equation
Determine F_{tu}, F_{ty}, e_o, and E for material	Reference 6-4, Reference 6-5, or material data sheets
Calculate e_{ptu} and n_t for material	Equation 6.3.2-6: $e_u = min[e_o, 0.05] + (F_{tu}/E)$ Equation 6.3.2-5: $e_{p_{tu}} = e_u - F_{tu}/E$ Equation 3.3.1-10: $n_t = log(e_{p_{tu}}/0.002)/log(F_{tu}/F_{ty})$
Calculate the extreme fiber strain of side with smaller c, $e_{smaller\text{-}c}$	Equation 6.3.3-2 $e_{smaller\text{-}c} = (c_{smaller}/c_{larger})e_{larger\text{-}c}$
Guess an extreme fiber stress, f (maximum of F_{tu}) for side with smaller c. $f \leq f_{larger_c}$ and Calculate strain, e	Equation 6.3.2-7: $e = f/E + e_{p_{tu}}(f/F_{tu})^{nt}$
If $e = e_{smaller\text{-}c}$ within acceptable error limits, then the extreme fiber stresses for the side with the smaller *c* is *f* If not, adjust guess for *f* and recalculate *e*.	

After determining the stress corresponding to $e_{smaller_c}$, *i.e.*, the stress at the extreme fiber of the subsection corresponding to the smaller *c*, the allowable moment for this subsection may be calculated using the stress and Equations 6.3.2-1 through 6.3.2-8.

The allowable moments are then combined by addition:

$$M_{allow} = M_{allow\text{-}larger_c} + M_{allow\text{-}smaller_c} \qquad \textbf{Equation 6.3.3-3}$$

Where
$M_{allow\text{-}larger_c}$ is the allowable resisting moment for the subsection with the larger c
$M_{allow\text{-}smaller_c}$ is the allowable resisting moment for the subsection with the smaller c

The margin of safety can then be calculated using Equation 6.3.2-3. Example problems using this technique are worked in Sections 6.3.8.3 and 6.3.8.4. The same problem is worked twice, once calculating the allowable moment about the principal axis and the second time calculating the allowable moment about the neutral axis to demonstrate the change in allowable due to the shift in the neutral axis. As the section analyzed gets more unsymmetrical, the change in the allowable is more pronounced and the analyst should be wary of using the principal axes for the determination of the allowable.

6.3.3.1 Determination of the Plastic Neutral Axis in an Unsymmetrical Section

The plastic neutral axis divides the cross section into two parts which have equal forces resulting from the plastic bending trapezoidal stress distributions. This is shown in Figure 6.3.3-2 where $P_{larger\text{-}c} = P_{smaller\text{-}c}$ within some acceptable error limit when the plastic neutral axis has been located. To determine the location of the neutral axis an iterative solution must be used.

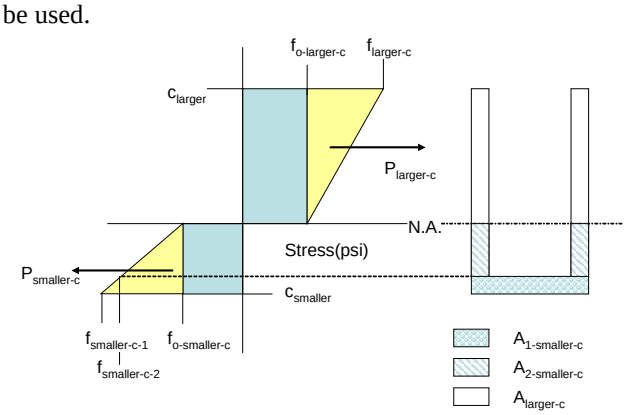

Figure 6.3.3-2 Unsymmetrical Section with Forces due to Plastic Bending Stress Distributions

Copyright 2016 Lockheed Martin Corporation.
Note: The current version is always the version on the Lockheed Martin network.

To determine the plastic neutral axis the trapezoidal distribution shown in Figure 6.3.3-2 is assumed. The load on each subsection will be calculated by summing the contributions from the rectangular, trapezoidal and triangular portions of the trapezoidal distribution shown in the illustration. For the triangular portion of the stress distribution, it is important to match the appropriate area with the appropriate stress levels, so the subsections may need to be broken into sub-areas. Equation 6.3.3-4 shows the upper section having a single calculation of Δf and the lower section having two calculations for Δf, however for an unsymmetrical I-section, each subsection would require two calculations of Δf. The magnitude of the triangular stress, for the cross section illustrated in Figure 6.3.3-2 is given by

$$\Delta f_{larger\text{-}c} = f_{larger\text{-}c} - f_{o\text{-}larger\text{-}c}$$
$$\Delta f_{smaller\text{-}c\text{-}1} = f_{smaller\text{-}c\text{-}1} - f_{o\text{-}smaller\text{-}c} \qquad \textbf{Equation 6.3.3-4}$$
$$\Delta f_{smaller\text{-}c\text{-}2} = f_{smaller\text{-}c\text{-}2} - f_{o\text{-}smaller\text{-}c}$$

where

$f_{larger\text{-}c}$, $f_{smaller\text{-}c1}$, $f_{smaller\text{-}c2}$ are the actual stresses in the part at the location described. (psi)

$f_{o\text{-}larger\text{-}c}$, $f_{o\text{-}smaller\text{-}c}$ are the trapezoidal intercept stresses at the extreme fiber for each subsection (psi)

Once f_o and Δf have been determined for each subsection the total load on each subsection can be determined from

$$P_{larger\text{-}c} = A_{larger}(f_{o\text{-}larger\text{-}c} + 0.5\Delta f_{larger\text{-}c})$$
$$P_{smaller\text{-}c} = A_{1\text{-}smaller}[f_{o\text{-}smaller\text{-}c} + 0.5(\Delta f_{smaller\text{-}c\text{-}1} + \Delta f_{smaller\text{-}c\text{-}2})] + A_{2\text{-}smaller}[f_{o\text{-}smaller\text{-}c} + 0.5\Delta f_{smaller\text{-}c\text{-}2}] \qquad \textbf{Equation 6.3.3-5}$$

where

A_{larger}, $A_{1\text{-}smaller}$, $A_{2\text{-}smaller}$ are the appropriate sub-area cross-sectional areas (in^2)

$\Delta f_{larger\text{-}c}$, $\Delta f_{smaller\text{-}c\text{-}1}$, $\Delta f_{smaller\text{-}c\text{-}2}$ are calculated per Equation 6.3.3-4 or similar

$f_{o\text{-}larger\text{-}c}$, $f_{o\text{-}smaller\text{-}c}$ are the trapezoidal intercept stresses at the extreme fiber for each subsection from Equation 6.3.2-8 (psi)

Again, the above equations describe the situation shown in Figure 6.3.3-2. Actual calculations may require the use of additional sub-areas for each subsection. If the true plastic neutral axis has been determined, $P_{larger\text{-}c}$ is equal to $P_{smaller\text{-}c}$ within some error limits, generally a few percent. Table 6.3.3-2 describes the steps used in the iterative solution to determine the plastic neutral axis at ultimate capability. All equations referenced have been introduced and described in this section or previously in Section 6.3.2 and 6.3.3.

Table 6.3.3-2 Iterative Process for Calculating Shift in Neutral Axis

Process	Reference or Equation
Calculate the total section moment of inertia, I, and the distance, c, to the outer fibers from the centroid.	
Calculate plastic bending section factors for each subsection, $k_{subsection}$	Equation 6.3.3-1
Determine F_{tu}, F_{ty}, E, and e_o, for material	Reference 6-4, Reference 6-5 or material data sheets
Calculate e_u, e_{ptu} and n_t for material	Equation 6.3.2-6: $e_u = min[e_o, 0.05] + (F_{tu}/E)$ Equation 6.3.2-5: $e_{p_{tu}} = e_u - F_{tu}/E$ Equation 3.3.1-10: $n_t = log(e_{p_{tu}}/0.002)/log(F_{tu}/F_{ty})$
Using $f_{larger\text{-}c} = F_{tu}$ as the extreme fiber stress for the side with the larger c, calculate $f_{o\text{-}larger\text{-}c}$	Equation 6.3.2-9: $f_o = \frac{6F_{tu}}{e_u^2}\left[\frac{F_{tu}^2}{3E^2} + \left(\frac{e_{p_{tu}}F_{tu}}{E}\right)\frac{(n_t+1)}{(n_t+2)} + \frac{n_t e_{p_{tu}}^2}{(2n_t+1)}\right] - 2F_{tu}$
Calculate strain for extreme fiber for the side with the smaller c using $e_{larger\text{-}c} = e_u$	Equation 6.3.3-2: $e_{smaller\text{-}c} = (c_{smaller}/c_{larger})e_{larger\text{-}c}$
Iterate to determine corresponding stress $f_{smaller\text{-}c}$ until $e_{smaller\text{-}calc} = e_{smaller\text{-}c}$	Equation 6.3.2-6: $e_{smaller\text{-}calc} = f_{smaller\text{-}c}/E + e_{p_{tu}}(f_{smaller\text{-}c}/F_{tu})^{n_t}$
Calculate plastic strain, $e_{p\text{-}smaller\text{-}c}$	Equation 6.3.2-4: $e_{p\text{-}smaller\text{-}c} = e_{smaller\text{-}c} - f_{smaller\text{-}c}/E$
Calculate the trapezoidal intercept stress, $f_{o\text{-}smaller\text{-}c}$	Equation 6.3.2-8:

Copyright 2016 Lockheed Martin Corporation.
Note: The current version is always the version on the Lockheed Martin network.

Process	Reference or Equation
	$f_o = \frac{6f}{e^2}\left[\frac{f^2}{3E^2} + \left(\frac{e_p f}{E}\right)\frac{(n_t+1)}{(n_t+2)} + \frac{n_t e_p^2}{(2n_t+1)}\right] - 2f$ where f_o, f, e, e_p are $f_{o\text{-smaller-c}}$, $f_{\text{smaller-c}}$, $e_{\text{smaller-c}}$, and $e_{\text{p-smaller-c}}$, respectively
Calculate Δf – note the equations may vary depending on geometry.	Equation 6.3.3-4: $\Delta f_{larger\text{-}c} = f_{larger\text{-}c} - f_{o\text{-}larger\text{-}c}$ $\Delta f_{smaller\text{-}c\text{-}1} = f_{smaller\text{-}c\text{-}1} - f_{o\text{-}smaller\text{-}c}$ $\Delta f_{smaller\text{-}c\text{-}2} = f_{smaller\text{-}c\text{-}2} - f_{o\text{-}smaller\text{-}c}$
Calculate P – Note that the distribution of area is important in the calculation of P. The equations given here are specific to section pictured in Figure 6.3.3.2	Equation 6.3.3-5: $P_{larger\text{-}c} = A_{larger}(f_{o\text{-}larger\text{-}c} + 0.5\Delta f_{larger\text{-}c})$ $P_{smaller\text{-}c} = A_{1\text{-}smaller}[f_{o\text{-}smaller\text{-}c} + 0.5(\Delta f_{smaller\text{-}c\text{-}1} + \Delta f_{smaller\text{-}c\text{-}2})] + A_{2\text{-}smaller}[f_{o\text{-}smaller\text{-}c} + 0.5\Delta f_{smaller\text{-}c\text{-}2}]$
Is $P_{larger\text{-}c} = P_{smaller\text{-}c}$ within appropriate error? If yes – assumed neutral axis is true plastic neutral axis. If no – adjust location and recalculate.	
Adjustment Algorithm	
Calculate $P_{increment}$ – if positive: area on the side of the larger c needs to increase and the neutral axis move toward smaller c; if negative: area on the side of the larger c needs to decreases and the neutral axis move toward the larger c.	$P_{increment} = (P_{smaller\text{-}c} - P_{larger\text{-}c})/2$
Calculate $A_{increment}$ – the increment / decrement to the area of the side with the larger c	$A_{increment} = P_{increment} / (f_{o\text{-}larger\text{-}c} + 0.5\Delta f_{larger\text{-}c})$
Calculate $A_{new\text{-}larger\text{-}c}$	$A_{new\text{-}larger\text{-}c} = A_{larger\text{-}c} + A_{increment}$
Determine how N.A. would need to be adjusted to result in the new area. Iterate with new N.A. location.	

6.3.3.2 Determination of Fiber Stress for an Applied Moment on an Unsymmetrical Section

Determining actual stresses in unsymmetrical sections undergoing plastic bending is similar to the iterative process described for the symmetric section in Section 6.3.2.2; however, because the resisting moment is a function of each subsection's plastic distribution it requires some additional calculations. Table 6.3.3-3 presents the iterative process used, comprising a series of guesses and adjustments to converge on the desired solution for a particular moment. An alternative approach is to construct a total section moment – strain curve and then over-plot the subsection fiber stress-strain curves allowing the analyst then to locate the particular moment and its associated stresses on the curves. To construct such a curve, one may use the procedure described in Table 6.3.3-3, choosing stress levels at uniform increments between the proportional limit and ultimate strength of the material and determining the strain and moment for each of these stress levels rather than guessing a stress and iterating by refining the guesses. An example of this type of curve is shown in Figure 6.3.3-3 for the cross section given in Example 3, Section 6.3.8.3. Also plotted is the stress in the extreme fiber of the subsection with the largest extreme fiber distance. For this particular example curve, the maximum fiber stress and trapezoidal intercept stresses have been divided by 10 as a convenience to allow them to plot as the same order of magnitude as the applied moment.

Table 6.3.3-3 Iterative Process for Determination of Extreme Fiber Stress for Unsymmetrical Sections

Process	Reference or Equation
Given the total section moment of inertia, I, and the distances to the outer fibers from the centroid, c_{larger} and $c_{smaller}$	
Calculate $k_{subsection}$ for each subsection	Equation 6.3.3-1
Determine F_{tu}, F_{ty}, E, and e_o, for material	Reference 6-4, Reference 6-5 or material data sheets
Calculate e_{ptu} and n_t for material	Equation 6.3.2-6: $e_u = min[e_o, 0.05] + (F_{tu}/E)$ Equation 6.3.2-5: $e_{p_{tu}} = e_u - F_{tu}/E$ Equation 3.3.1-10: $n_t = log(e_{p_{tu}}/0.002)/log(F_{tu}/F_{ty})$

Copyright 2016 Lockheed Martin Corporation.
Note: The current version is always the version on the Lockheed Martin network.

Subsection 1 - c_{larger}	
Assume an extreme fiber stress, $f_{larger\text{-}c}$ and calculate strain, $e_{larger\text{-}c}$	Equation 6.3.2-7: $e_{larger\text{-}c}=f_{larger\text{-}c}/E+e_{p_{tu}}(f_{larger\text{-}c}/F_{tu})^{n_t}$
Calculate plastic strain, $e_{p\text{-}larger\text{-}c}$	Equation 6.3.2-4: $e_{p\text{-}larger\text{-}c}=e_{larger\text{-}c}-f_{larger\text{-}c}/E$
Calculate the trapezoidal intercept stress, $f_{o\text{-}larger\text{-}c}$ using f_o, f, e, e_p as $f_{o\text{-}larger\text{-}c}$, $f_{larger\text{-}c}$, $e_{larger\text{-}c}$, and $e_{p\text{-}larger\text{-}c}$, respectively for assumed stress	Equation 6.3.2-8: $f_o=\frac{6f}{e^2}\left[\frac{f^2}{3E^2}+\left(\frac{e_p f}{E}\right)\frac{(n_t+1)}{(n_t+2)}+\frac{n_t e_p^2}{(2n_t+1)}\right]-2f$
Calculate the larger-c subsection bending modulus	Equation 6.3.2-2: $(mc/I)_{b\text{-}larger\text{-}c}=f_{larger\text{-}c}+f_{o\text{-}larger\text{-}c}(k_{larger}-1)$
Calculate the large-c subsection moment	Equation 6.3.2-1: $m_{appl\text{-}larger\text{-}c}=(mc/I)_{b\text{-}larger\text{-}c}\bullet(I_1/c_{larger\text{-}c})$
Subsection 2 - $c_{smaller}$	
Calculate the extreme fiber strain, $e_{smaller\text{-}c}$	Equation 6.3.3-2: $e_{smaller\text{-}c}=(c_{smaller}/c_{larger})e_{larger\text{-}c}$
Iterate to determine corresponding stress $f_{smaller\text{-}c}$ until $e_{smaller\text{-}calc}=e_{smaller\text{-}c}$	Equation 6.3.2-7: $e_{smaller\text{-}c\text{-}calc}=f_{smaller\text{-}c}/E+e_{ptu}(f_{smaller\text{-}c}/F_{tu})^{n_t}$
Calculate plastic strain, $e_{p\text{-}smaller\text{-}c}$	Equation 6.3.2-4: $e_{p\text{-}smaller\text{-}c}=e_{smaller\text{-}c}-f_{smaller\text{-}c}/E$
Calculate the trapezoidal intercept stress, $f_{o\text{-}smaller\text{-}c}$ using f_o, f, e, e_p are $f_{o\text{-}smaller\text{-}c}$, $f_{smaller\text{-}c}$, $e_{smaller\text{-}c}$, and $e_{p\text{-}smaller\text{-}c}$, respectively	Equation 6.3.2-8: $f_o=\frac{6f}{e^2}\left[\frac{f^2}{3E^2}+\left(\frac{e_p f}{E}\right)\frac{(n_t+1)}{(n_t+2)}+\frac{n_t e_p^2}{(2n_t+1)}\right]-2f$
Calculate the smaller-c subsection bending modulus	Equation 6.3.2-2: $(mc/I)_{b\text{-}smaller\text{-}c}=f_{smaller\text{-}c}+f_{o\text{-}smaller\text{-}c}(k_{smaller\text{-}c}-1)$
Calculate the subsection moment	Equation 6.3.2-1: $m_{appl\text{-}smaller\text{-}c}=(mc/I)_{b\text{-}smaller\text{-}c}\bullet(I_2/c_{smaller\text{-}c})$
Total Section	
Calculate the total section moment	Equation 6.3.3-3: $m_{appl\text{-}calc}=m_{appl\text{-}larger\text{-}c}+m_{appl\text{-}smaller\text{-}c}$
If $m_{appl}=m_{appl\text{-}calc}$ within acceptable error limits, then the extreme fiber stresses are $f_{larger\text{-}c}$ and $f_{smaller\text{-}c}$. If not, adjust assumed value for $f_{larger\text{-}c}$ and recalculate $m_{appl\text{-}calc}$.	

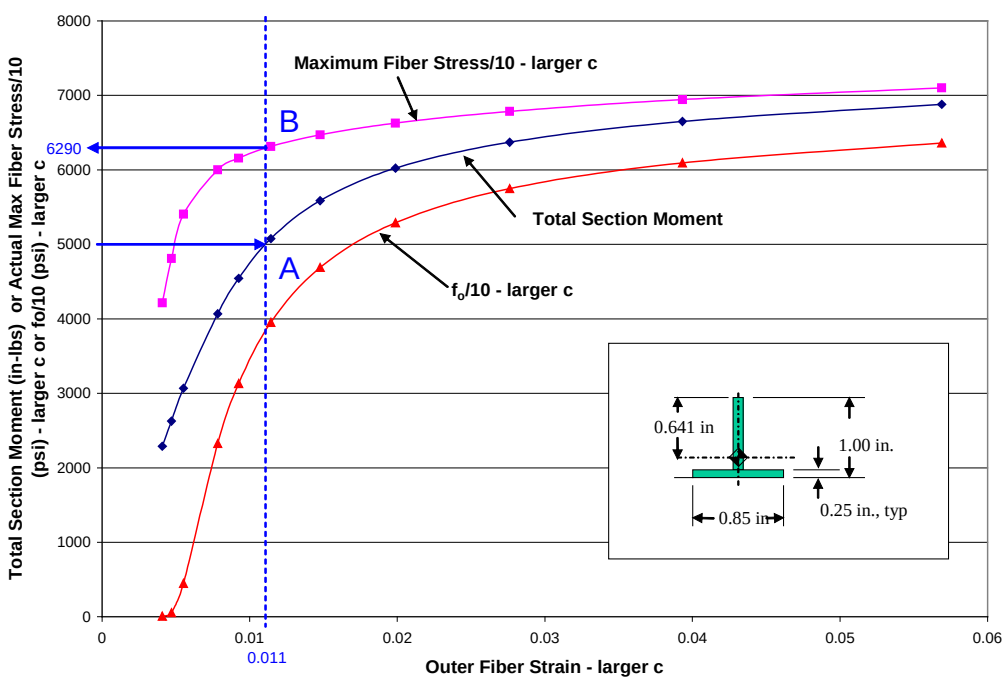

Figure 6.3.3-3 Illustration of Total Section Moment and Maximum Extreme Fiber Stress versus Strain Curve

Copyright 2016 Lockheed Martin Corporation.
Note: The current version is always the version on the Lockheed Martin network.

To use this curve, enter along the left vertical axis with the total applied moment. In the case of Example 3, Section 6.3.8.3, *m=5000 in-lbs*. Project a line horizontally to intersect the Total Section Moment curve (A), draw a vertical line at this intersection up to the Maximum Fiber Stress Curve (B) and down to the horizontal axis. From the horizontal axis, read the strain at the outer fiber for this applied moment for the side of the section with the larger *c*. In the case of this example, $e_{larger\text{-}c} = 0.011$ *in/in*. Using this strain, the strain at the outer fiber for the side with the smaller *c* can be determined using Equation 6.3.3-2 and then iterate Equation 6.3.2-7 to determine the stress. The true stress at the outer fiber on the side with the larger *c* can be read from Figure 6.3.3-3 by drawing a line from B to the left vertical axis and reading the stress/10. Again, for this example, 6290 or $f_{larger\text{-}c} = 62900$ *psi*.

6.3.3.3 Simple Bending of an Unsymmetrical Section with Shear

Reference 6-23 provides a methodology for the calculation of the shear peaking factor for an unsymmetrical section. As with the symmetric section, the shear stress distribution corresponding to a trapezoidal bending distribution is given by Equation 6.3.2-11. The shear peaking factor is calculated from a geometric factor and a factor which represents the degree of plasticity exhibited by the applied loading.

For an unsymmetrical section, Reference 6-23 defines the geometric factor, k_{inv}, for shear as

$$k_{inv} = I / [A_{sub}\, y_{sub}(y_1 + y_2)] \qquad \textbf{Equation 6.3.3-6}$$

where
I is the moment of inertia of the entire section about the neutral axis (in^4)
A_{sub} is the area for which shear is being calculated, on the same side as the shear calculation. It may be the entire subsection or only part of the subsection. (in^2)
y_{sub} is the distance from the neutral axis to the centroid of the section for which the shear stress is calculated (in). This should be consistent with A_{sub}.
y_1, y_2 are the distances from the neutral axis to the centroid of subsections 1 and 2, respectively (in).

The degree of plasticity for the applied moment must be calculated. Using the extreme fiber stress based on the elastic triangular distribution and the modulus of rupture for the same side of the neutral axis for which the shear flow is being analyzed, calculate k_{plas} as

$$k_{plas} = (f\text{-}F_{tp})/[(mc/I)_{b\text{-}ult} - F_{tp}] \geq 0.0 \qquad \textbf{Equation 6.3.3-7}$$

$$\text{If } k_{plas} < 0.0, \text{ then set } k_{plas} = 0.0$$

$$\text{If } f > (mc/I)_{b\text{-}ult}, \text{ then } k_{plas} = 1.0$$

where
f is the applied bending stress at the extreme fiber calculated from mc/I. This value may exceed F_{tu} but not the appropriate modulus of rupture. (psi)
F_{tp} is the proportional limit stress of the material calculated per Section 3.3.1.4 (psi)
$(mc/I)_{b\text{-}ult}$ is the modulus of rupture of the subsection, *i.e.*, the bending modulus at F_{tu} (psi)

Note in the above formulation, although a *mc/I* bending stress, which may exceed ultimate, is used for the calculation of k_{plas}, it is only a mathematical convenience to determine the degree of plasticity. The stress in the part never exceeds F_{tu}.

If k_{plas} of Equation 6.3.3-7 is less than zero, it is set to zero, resulting in $C_{shear} = 1.0$ and effectively reducing the shear stress calculation to $f_s=VQ/(It)$. This occurs below the proportional limit of the material. For a fully plastic section, where $k_{plas} = 1.0$, $C_{shear} = k_{inv}$. For values of k_{plas} between 0 and 1, the shear peaking factor is then given by Equation 6.3.2-14. If the shear flow is being determined at the neutral axis for an unsymmetrical section, compute the shear flow value using each subsection, independently, and select the larger value for use in margin calculations. Also the shear flow is zero at the centroid of the section, but is not necessarily zero at the plastic neutral axis.

Once the shear and bending stresses have been calculated, the margin can be obtained from interaction equations. Section 6.3.6 provides methods for interactions of various types of loading.

Copyright 2016 Lockheed Martin Corporation.
Note: The current version is always the version on the Lockheed Martin network.

6.3.4 Local Crippling due to Bending of a Section

This section provides a method for calculating the plastic bending allowable when a flange or flanges are undergoing a compressively induced local buckling and subsequent crippling failure of a flange due to a bending load. This is a different analysis from the column crippling analysis of Section 8.3 in that the entire cross section is not undergoing an axial compression load. A cross section undergoing bending will have a portion in tension and the other in compression. If the cross section has thin flanges / caps, these segments may be critical in local compression-side crippling and the cross section will not be able to develop the full plastic bending capability.

To determine the plastic bending allowable, first develop the crippling stress allowable for the critical flange / cap segment of the cross section per Section 8.3. In this case, the crippling allowable is not based on a total cross section allowable, but the allowable of the compression portion of the cross section segment consideration, measured from the neutral axis of the section to the outer fiber. The development of the plastic bending allowable then assumes that the area of the cross section, which is associated with this crippling limitation, will develop the critical crippling stress at a fiber location a distance y_{cc} from the neutral axis. In general, y_{cc} would be equal c; however, there may be cases in which this is not true. This analysis again uses the methodology developed in Section 6.3.2.1.

Using the crippling stress cutoff and Equation 6.3.2-7 to develop the crippling strain at y_{cc} (the location critical for crippling), then ratio this strain using Equation 6.3.2-10 to obtain the extreme fiber strain, e_{max}, using the following equation:

$$e_{max} = e_{cc}(c/y_{cc})$$ **Equation 6.3.4-1**

Where
e_{max} is the allowable strain at the extreme fiber (maximum of e_u) (in/in)
e_{cc} is the crippling strain allowable of the critical section (in/in)
c is the distance from the neutral axis to the extreme fiber (in)
y_{cc} is the distance from the neutral axis to the point of critical stress on the flange limited by crippling (in)

The crippling strain at y_{cc} limits the maximum stress that the tension leg can withstand due to the fundamental assumption of linearity of strains. Once e_{max} is determined, e_{max} is used instead of the ultimate failure strain to determine the bending modulus. If e_{max} exceeds e_u, the section is not crippling critical and e_{max} should be set equal to e_u. Using the iterative solution shown in Table 6.3.2-2 for symmetric sections, determine the extreme fiber stress which corresponds to e_{max}. Having determined the stress corresponding to e_{max}, the calculation can now be made for the plastic strain e_p, f_o, $(mc/I)_b$, and M_{allow} using Equations 6.3.2-1 through 6.3.2-8.

If the cross section is unsymmetrical, the method outlined in Section 6.3.3 is used, but $e_{max\text{-}larger_c}$ and $e_{max\text{-}smaller\ c}$ are calculated for each subsection using c_{larger} and $c_{smaller}$ in lieu of c in Equation 6.3.4-1. Note that for analysis involving flange crippling it is important to account for the neutral axis shift by the method outlined above. Again, an iterative solution is required using Table 6.3.3-1. An example of this procedure is provided in Section 6.3.8.5.

It should be noted that for crippling cutoffs below the proportional limit of the material, *i.e.*, large *b/t* ratios, plastic bending analysis is not advised.

6.3.5 Complex Bending

Complex bending occurs when the resultant applied moment vector is not parallel to the principal axes of the section. In this case, the moment vectors are first resolved to moment vectors parallel with the principal axes and then are treated as two cases of simple bending about these axes. If the resulting sections about the principal axes are unsymmetrical, then the neutral axis shift described in Section 6.3.3.1 **must be performed after the rotation into the principal axis system.** Figure 6.3.5-1 illustrates the coordinate system definition and rotation.

Copyright 2016 Lockheed Martin Corporation.
Note: The current version is always the version on the Lockheed Martin network.

To determine the principal axes, if not apparent, first determine the moments of inertia, I_x and I_y, and the product of inertia, I_{xy}, about a convenient centroid axes. Then the angle between that axis and the principal axis may be determined from

$$\tan 2\theta = 2I_{xy}/(I_y - I_x)$$ **Equation 6.3.5-1**

Where
θ is the angle between the arbitrary x axis and the principal x' axis (+ CCW). (degrees) See Figure 6.3.5-1
I_x is the moment of inertia about the x centroid axis (in^4)
I_y is the moment of inertia about the y centroid axis (in^4)
I_{xy} is the product of inertia about the centroid axes (in^4)

The moments of inertia about the principal axes, necessary for obtaining the allowable resisting moment can also be calculated from I_x , I_y and I_{xy} as follows

$$I_{\max,\min} = \left[\frac{I_x + I_y}{2} \pm \sqrt{I_{xy}^2 + \left(\frac{I_x - I_y}{2} \right)^2} \right]$$ **Equation 6.3.5-2**

Where
I_{max} is the maximum moment of inertia about the principal centroid axes (in^4)
I_{min} is the minimum moment of inertia about the principal centroid axes (in^4)
I_x is the moment of inertia about the x centroid axis (in^4)
I_y is the moment of inertia about the y centroid axis (in^4)
I_{xy} is the product of inertia about the centroid axes (in^4)

Moment vectors m_x and m_y applied to an arbitrary axes, x and y, can be resolved into moments $m_{x'}$ and $m_{y'}$ about the principal axes, x' and y', by the following equations

$$m_{x'} = m_x \cos\theta + m_y \sin\theta$$ **Equation 6.3.5-3**
$$m_{y'} = - m_x \sin\theta + m_y \cos\theta$$

Where
m_x is the applied moment about the x axis (in-lb)
m_y is the applied moment about the y axis (in-lb)
θ is the angle that the principal x axis makes with the original x axis. (Positive CCW) (degrees)

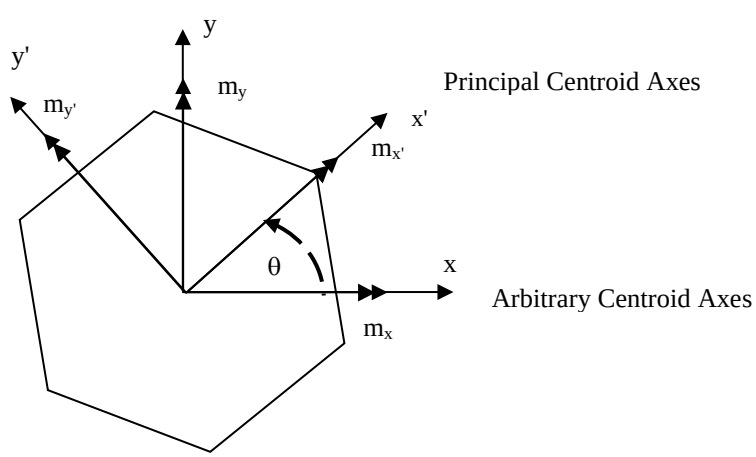

Figure 6.3.5-1 Coordinate System Definition

Copyright 2016 Lockheed Martin Corporation.
Note: The current version is always the version on the Lockheed Martin network.

Once the angle between the arbitrary axes and the principal axes is known, the allowable resisting moment about each of the principal axes, *x'* and *y'*, can be calculated per Section 6.3.2 for a symmetric cross section or Section 6.3.3 for an unsymmetrical cross section. Use *I* and *c*, as defined in the principal axis system, in Equation 6.3.2-1.

To calculate the Margin of Safety, first determine the moment ratios per the following equations

$$R_{bx'} = m_{x\text{-}appl'} / M_{x\text{-}allow'}$$
$$R_{by'} = m_{y\text{-}appl'} / M_{y\text{-}allow'}$$

Equation 6.3.5-4

Where

$m_{x\text{-}appl'}$ is the applied moment about the principal x' axis (in-lb)

$M_{x\text{-}allow'}$ is the allowable resisting moment about the principal x' axis (in-lb)

$m_{y\text{-}appl'}$ is the applied moment about the principal y' axis (in-lb)

$M_{y\text{-}allow'}$ is the allowable resisting moment about the principal y' axis (in-lb)

The Margin of Safety, in pure bending, is then given by

$$M.S. = \frac{1}{R_{bx'} + R_{by'}} - 1$$

Equation 6.3.5-5

Where

$R_{bx'}$, $R_{by'}$ are the ratios of applied moment to allowable moment about the principal x' and y' axes, respectively.

An example of this methodology is developed in Section 6.3.8.6. Use of a linear interaction equation, depending on cross section, can range from very conservative for a circular cross section to exact for a cruciform at 45-degrees to the bending axis.

Refer to Section 6.3.6 for cases where other stresses are present and a combined margin of safety must be determined.

6.3.5.1 Complex Bending with Shear

The shear vectors should be resolved to shear vectors parallel to the principal axes developed in Section 6.3.5. It is assumed that $V_{x'}$ is parallel to the principal *x* axis and $V_{y'}$ is parallel to the principal *y* axis. The various geometric factors and loads are depicted in Figure 6.3.5-2.

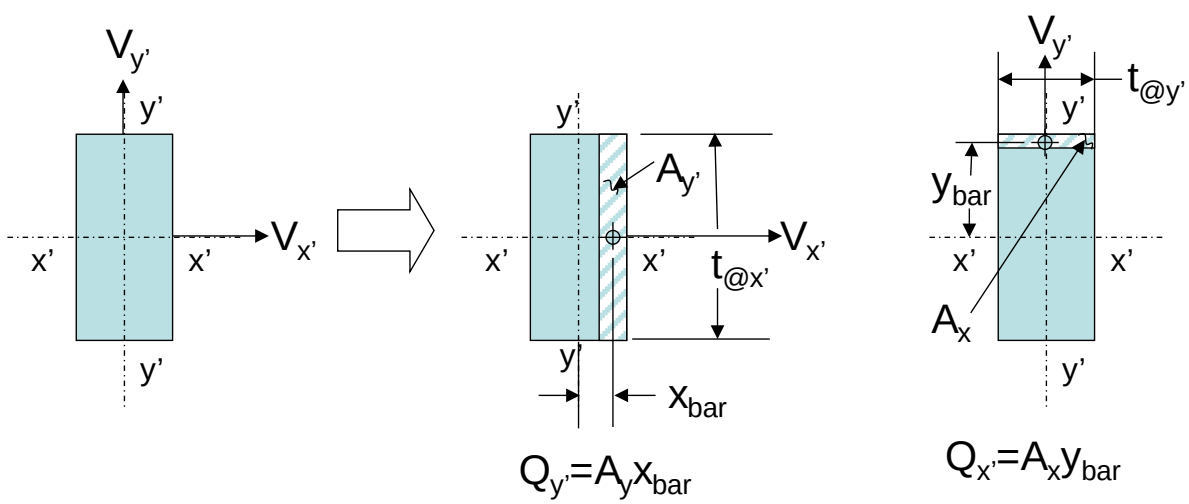

Figure 6.3.5-2 Geometry for Shear Stress Calculations

Copyright 2016 Lockheed Martin Corporation.
Note: The current version is always the version on the Lockheed Martin network.

The shear stress parallel to each principal axis is calculated from

$$f_{s-x'} = C_{shear-x'}\left(\frac{V_{x'}Q_{y'}}{I_{y'}t_{@\,x'}}\right)$$

$$f_{s-y'} = C_{shear-y'}\left(\frac{V_{y'}Q_{x'}}{I_{x'}t_{@\,y'}}\right)$$

Equation 6.3.5-6

where
$C_{shear-x'}$,$C_{shear-y'}$ are the shear peaking factors given by Equation 6.3.5-10.
$V_{x'}$, $V_{y'}$ are the applied transverse shear loads parallel to the principal x and y axes, respectively (lbs)
$Q_{x'}$, $Q_{y'}$ are the first or static moment about the whole section principal neutral axes of the area between the analysis point and the extreme fiber (in^3)
$I_{x'}$, $I_{y'}$ are the moments of inertia of the entire section about the principal neutral axes (in^4)
$t_{@x'}$,$t_{@y'}$ are the thicknesses at the point of analysis (in)

The geometric shear factors, $k_{inv-x'}$ and $k_{inv-y'}$ about each principal axis can be obtained per Equation 6.3.2-12 or Equation 6.3.3-6.

The degree of plasticity, k_{plas}, must consider the combined effect of bending about both principal axes. For the case where **no axial load is applied** to the section, the following approach may be used. Recalling Equation 6.3.2-13, if instead of stress, the equation were reformulated in terms of stress ratios, the effect of bending in both axes could be accommodated and is given by

$$k_{plas} = (R_b - R_{b-tp})/(1 - R_{b-tp}) \geq 0.0$$

Equation 6.3.5-7

If $R_b \geq 1.0$, *then set* $k_{plas} = 1.0$

where
R_b is the total bending ratio given by Equation 6.3.5-8.
R_{b-tp} is the total bending ratio at the proportional limit given by Equation 6.3.5-9.

The total bending ratio R_b is calculated from the sum of the individual bending ratios given by Equation 6.3.5-4.

$$R_b = R_{bx'} + R_{by'}$$

Equation 6.3.5-8

where
$R_{bx'}$, $R_{by'}$ are the moment ratios about the principal axes, x' and y', given by Equation 6.3.5-4.

To create an equivalent proportional stress ratio, if the applied load ratio were varied such that the maximum total stress were the proportional limit of the material, the bending ratio at the proportional limit is calculated as

$$R_{b-tp} = R_b F_{tp}/f_{total}$$

Equation 6.3.5-9

If $F_{tp} \geq f_{total}$ *then section is elastic and* $k_{plas} = 0.0$

where
R_b is the total bending ratio given by Equation 6.3.5-8
F_{tp} is the proportional limit of the material (psi) give by Equation 3.3.1-11
f_{total} is the maximum total stress in the cross section due to the applied moment (psi)

If $k_{plas} = 0.0$, the stresses are below the proportional limit of the material and no shear peaking is required, *i.e.*, $C_{shear-x'} = C_{shear-y'} = 1.0$) effectively reducing the shear stress calculation to $f_s = VQ/(It)$. In the case where axial load is applied to the cross section, the interaction curves between bending and tension must be used to generate the degree of plasticity, k_{plas}. This will be discussed in Section 6.3.6.4.

The shear peaking factors are then given by

$$C_{shear-x'} = 1 + k_{plas}(k_{inv-x'} - 1);\ 1.0 \leq C_{shear-x'} \leq k_{inv-x'}$$

$$C_{shear-y'} = 1 + k_{plas}(k_{inv-y'} - 1);\ 1.0 \leq C_{shear-y'} \leq k_{inv-y'}$$

Equation 6.3.5-10

Copyright 2016 Lockheed Martin Corporation.
Note: The current version is always the version on the Lockheed Martin network.

where
k_{plas} is the degree of plasticity given by Equation 6.3.5-7, 6.3.6-22 or 6.3.6-26
$k_{inv\text{-}x'}$, $k_{inv\text{-}y'}$ are the geometric shear factors about the principal axes per Equation 6.3.2-12 or 6.3.3-6

Once the shear and bending stresses have been calculated, the margin can be obtained from interaction equations. Section 6.3.6 provides methods for interactions of various types of loading.

6.3.6 Combined Stresses

Plastic bending can be combined with other applied loads such as tension, compression, and shear loads through the use of interaction equations. These interaction equations are empirically derived and vary based on the types of loading involved. This section provides analysis techniques for combinations involving tension or compression with bending.

6.3.6.1 Interaction – Simple or Complex Bending with Tension Axial Stress

Determine the allowable resisting moment, M_{allow}, using the methods outlined in Sections 6.3.2 or 6.3.3 then calculate R_b and R_t as

$$R_b = m_{appl} / M_{allow} \qquad \text{simple bending} \qquad \textbf{Equation 6.3.6-1}$$

Where
m_{appl} is the applied bending moment (in-lbs)
M_{allow} is the allowable moment (in-lbs) per Equation 6.3.2-1

$$R_b = R_{bx'} + R_{by'} \qquad \text{complex bending} \qquad \textbf{Equation 6.3.6-2}$$

Where
$R_{bx'}$, $R_{by'}$ are the ratios of applied moment to allowable moment about the principal axes, x' and y' respectively per Equation 6.3.5-4.

$$R_t = P / (AF_{tu}) \qquad \textbf{Equation 6.3.6-3}$$

Where
P is the applied axial tension load (lbs)
A is the total cross-sectional area (in^2)
F_{tu} is the ultimate tensile strength of the material (psi)

The Margin of Safety is a function of an exponent which is based on the material plasticity and the geometry of the individual section. Table 6.3.2-1 lists the material plasticity factor, γ, for a sample of the materials used in aerospace applications. This factor would be equal to 0.0 for a perfectly elastic, *i.e.*, brittle material and 1.0 for a perfectly plastic material, *i.e.*, a rectangular stress-strain diagram. The material plasticity factor can also be calculated from the following equation:

$$\gamma = (mc/I)_{b,k=2.0} / F_{tu} - 1 \qquad \textbf{Equation 6.3.6-4}$$

Where
γ is the material plasticity factor
$(mc/I)_{b,k=2.0}$ is the ultimate modulus of rupture for the material and a section factor, k, of 2.0. (psi)
F_{tu} is the ultimate tensile strength of the material (psi)

For the geometry effects, calculate K_{geom} per Equation 6.3.6-5. If the section is unsymmetrical, *c* should be chosen such that the axial and bending stresses are of opposite sign.

$$K_{geom} = Ac/(2Q) \qquad \textbf{Equation 6.3.6-5}$$

Where
A is the cross section area (in^2)
c is the distance from the neutral axis to the extreme fiber. (in)
Q is the first or static moment about the principal axis of the area between the principal axis and the extreme fiber. (in^3)

Copyright 2016 Lockheed Martin Corporation.
Note: The current version is always the version on the Lockheed Martin network.

Using K_{geom} and γ, calculate the exponent, r, for the interaction equation from

$$r = [\gamma (K_{Geom}-1)/1.1] + 1 \qquad K_{geom} <= 2.14$$
$$r = [\gamma (K_{Geom}+2)/4.0] + 1 \qquad K_{geom} > 2.14$$

Equation 6.3.6-6

where
K_{geom} is given by Equation 6.3.6-5
γ is the material plasticity factor given by Equation 6.3.6-4.

Some values for K_{geom} and r for a range of material plasticity factors typical of metallic materials used in aircraft applications are shown in Figure 6.3.6-1.

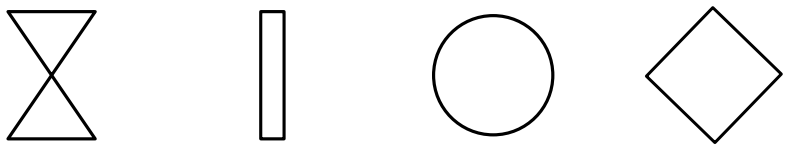

K_{geom}	1.5	2.0	2.356	3.0
	r	**r**	**r**	**r**
γ=0.85	1.386	1.773	1.926	2.063
γ=0.90	1.409	1.818	1.980	2.125
γ=0.95	1.432	1.864	2.035	2.188

Figure 6.3.6-1 Typical Values for K_{geom} for Common Shapes

If complex bending is involved, K_{geom-x} and K_{geom-y} should be calculated independently. If the section, further, is unsymmetrical about x', y' or both, c should always be selected for the side for which the axial and bending stresses are of opposite sign.

Once the individual interaction exponents are obtained a combined value may be calculated from the following equation.

$$r_{combined} = (r_{x'}R_{bx'} + r_{y'}R_{by'}) / R_b$$

Equation 6.3.6-7

Where
$r_{x'}$, $r_{y'}$ are the interaction exponents about the x and y principal axes, respectively from Equation 6.3.6-6.
$R_{bx'}$, $R_{by'}$ are the ratios of applied moment to allowable moment about the principal x and y axes, respectively per Equation 6.3.5-4.
R_b is the sum of $R_{bx'}$, $R_{by'}$

To calculate the Margin of Safety, plot R_t and R_b on Figure 6.3.6-2 as point A. For this discussion, let the interaction exponent, r, equal 1.4. Draw line OA and extend it to intersect with the curve for $r = 1.4$, shown as Point B. Read $R_{t\text{-}ALLOW}$ and $R_{b\text{-}ALLOW}$ where Point B intersects the horizontal and vertical axes, respectively. Point D will be used in Section 6.3.6.3 for interactions involving bending, tension and shear.

The margin of safety for combined bending and tension is then given by

$$M.S. = R_{b\text{-}ALLOW} / R_b - 1 \quad OR \quad M.S. = R_{t\text{-}ALLOW} / R_t - 1$$

Equation 6.3.6-8

Where
$R_{t\text{-}ALLOW}$, $R_{b\text{-}ALLOW}$ are the allowable ratios obtained from Figure 6.3.6-2
R_b is the applied bending moment ratio from Equation 6.3.6-1 or Equation 6.3.6-2
R_t is the applied axial tension load ratio from Equation 6.3.6-3

Copyright 2016 Lockheed Martin Corporation.
Note: The current version is always the version on the Lockheed Martin network.

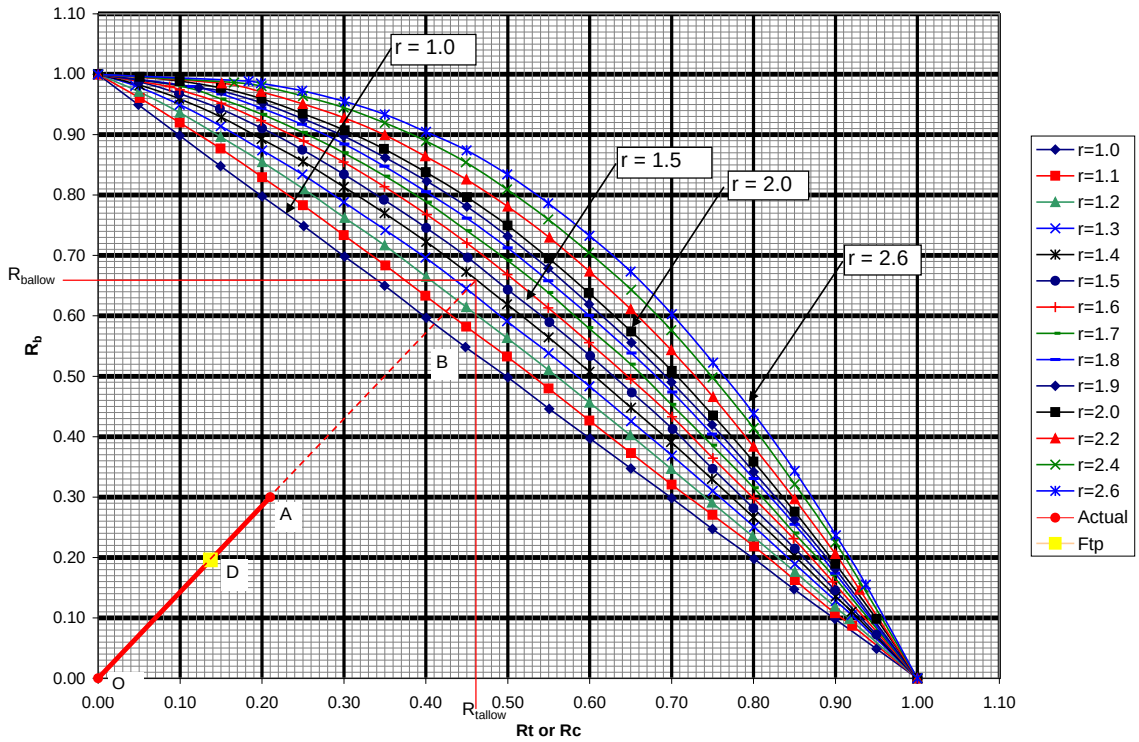

Curves are given by $R_t^r + R_b = 1$ or $R_c^r + R_b = 1$

Figure 6.3.6-2 Margin of Safety Interaction Curves

6.3.6.2 Interaction – Simple or Complex Bending with Compressive Axial Stress

When compressive axial stresses are present in the cross section under analysis, any secondary moments due to deflection must be accounted for in the bending stress calculation. In addition, the axial stress ratio is based on the failure of the cross section as a pure column.

After determining the allowable resisting moment, M_{allow}, using the method outlined in Sections 6.3.2 or 6.3.3, and the allowable column load, P_{cr}, per Section 8, calculate R_b and R_c as follows:

$$R_b = m_{appl} / M_{allow}$$ simple bending **Equation 6.3.6-9**

Where

m_{appl} is the total applied bending moment and must take into account secondary bending effects due to the compression loading, including beam-column magnification effects per Section 8.3 (in-lbs)

M_{allow} is the allowable resisting moment per Equation 6.3.2-1(in-lbs)

$$R_b = R_{bx'} + R_{by'}$$ complex bending **Equation 6.3.6-10**

Where

$R_{bx'}$, $R_{by'}$ are the ratios of applied moment (including secondary bending) to resisting moment about the principal x and y axes, respectively per Equation 6.3.5-4

$$R_c = P / P_{cr}$$ **Equation 6.3.6-11**

Where

P is the applied axial compression load (lbs)

P_{cr} is the failure load (lbs) as a pure column. Refer to Section 8.

Copyright 2016 Lockheed Martin Corporation.
Note: The current version is always the version on the Lockheed Martin network.

The Margin of Safety is then calculated from

$$M.S. = \frac{1}{R_b + R_c} - 1 \qquad \textbf{Equation 6.3.6-12}$$

where
R_b is the bending ratio given by Equation 6.3.6-9
R_c is the axial load ratio given by Equation 6.3.6-11

6.3.6.3 Interaction – Simple or Complex Bending with Shear Stress

In the elastic range, the maximum shear stress on a section generally occurs at the neutral axis where the bending stress is zero while the maximum bending stress occurs at an extreme fiber, where the shear stress is zero. Thus the elastic distribution of shear and bending stress is usually such that the most critical point on the section is either at the neutral axis or the extreme fiber. This is true for a rectangular section since the shear distribution across the section is parabolic and the bending distribution is linear.

In the plastic range, the distribution of the shear and bending stresses across the section differs from that in the elastic range and this can result in intermediate points which are more critical in the combined stress state than either the shear stress at the neutral axis or the bending stress at the extreme fiber. This is illustrated in Figure 6.3.6-3 where the critical location for the section might be at the cap/web interface. The plot of shear and bending stresses, shown, illustrate that at the cap web intersection in a plastic distribution, the stress is almost at maximum values for both bending and shear.

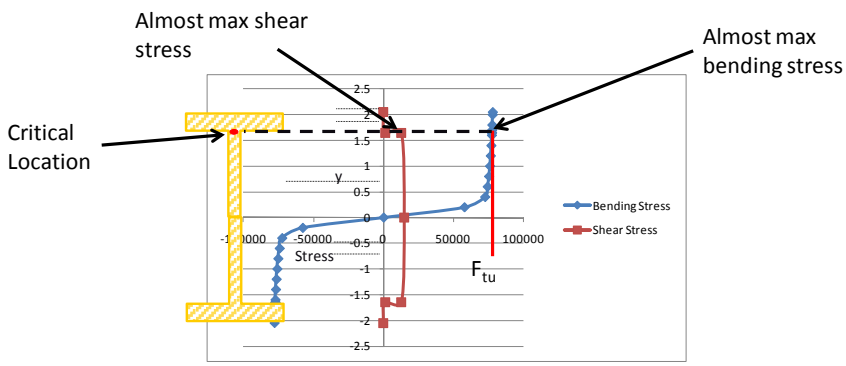

Figure 6.3.6-3 Stress Interaction in I-Section

A quick but conservative approach to ensuring that the critical stresses have been examined is to calculate the maximum shear and maximum bending in the section, irrespective of location and then calculate the margin based on a circular interaction. The degree of conservatism for this margin is a function of the section being considered. If a more precise margin is required, calculations may need to be made at several locations through the section with stresses specific to those locations (true stresses) to determine the critical margin of safety. Each of these approaches is described in the next sections and both can be extended to complex bending and interaction with axial loading.

6.3.6.3.1 Maximum Bending, Maximum Shear Approach

As noted in the introduction for Section 6.3.6.3, this approach will yield results which vary from slightly conservative for thin walled sections to more conservative for solid sections. If a more precise margin is required, refer to Section 6.3.6.3.2. To obtain the estimated margin, calculate R_b per Equation 6.3.6-1 for simple bending or Equation 6.3.6-2 for complex bending using the m_{appl} and M_{allow} for the maximum applied moment for the entire section.

Copyright 2016 Lockheed Martin Corporation.
Note: The current version is always the version on the Lockheed Martin network.

Calculate the maximum shear stress for the section, using the shear peaking factor per Sections 6.3.2.3 or 6.3.3.3 for simple bending. The shear ratio can then be calculated from

$$R_s = f_{s\text{-}max}/F_{su}$$ **Equation 6.3.6-13**

where
$f_{s\text{-}max}$ is the maximum applied shear stress including the shear peaking factor per Equation 6.3.2-11 (psi)
F_{su} is the ultimate allowable shear stress (psi)

If the section is involved in complex bending, obtain both $f_{s\text{-}x'}$ and $f_{s\text{-}y'}$ per Section 6.3.5.1 and calculate $R_{s\text{-}x'}$, $R_{s\text{-}y'}$ and R_s as

$$R_{s\text{-}x} = f_{s\text{-}x'\text{-}max}/F_{su}$$
$$R_{s\text{-}y} = f_{s\text{-}y'\text{-}max}/F_{su}$$
$$R_s = (R_{s\text{-}x'}^2 + R_{s\text{-}y'}^2)^{1/2}$$ **Equation 6.3.6-14**

where
$f_{s\text{-}x'\text{-}max}$, $f_{s\text{-}y'max}$ are the maximum applied shear stress including the shear peaking factor about the principal neutral axes per Euqation 6.3.5-6 (psi)
F_{su} is the ultimate allowable shear stress (psi)

Once the applied bending and shear ratios are calculated, an estimate of the margin of safety may be determined through the use of a circular interaction relationship.

$$R_s^2+R_b^2=1$$
$$M.S._{est} = \frac{1}{\sqrt{R_s^2 + R_b^2}} - 1$$ **Equation 6.3.6-15**

where
R_s is the shear stress ratio from Equation 6.3.6-13 or 6.3.6-14
R_b is the bending ratio ratio from Equation 6.3.6-1 or 6.3.6-2

Because stresses are not linear, this results in a good estimate of the margin of safety for combined bending and shear. To obtain a true margin, iterate by varying the applied loads in the same proportion until the margin is zero. This load becomes the allowable load and the true margin is given by

$$M.S. =[(k_{rdc}m_{appl}) / m_{appl}] -1= [(k_{rdc}V) / V] -1= k_{rdc}-1$$ **Equation 6.3.6-16**

where
m_{appl} is the applied moment (in-lbs)
V is the applied shear loads (lbs)
k_{rdc} is the reduction ratio applied to the applied loads which results in $M.S._{est} = 0.0$

Note that the difference between the estimated margin of safety and the true margin are generally on the order of +/- 0.01; however, there can be geometries for which the difference would be larger. The analyst is cautioned that if the difference is significant, the iteration routine needs to be thoroughly checked.
When using the maximum bending and maximum shear approach for the bending component, the factor k_{rdc} may be determined by direct application to the moment ratio. However, for the shear component the shear stress is magnified by the shear peaking factor, which is a function of the degree of plasticity the section is experiencing due to the bending. This must be taken into account when applying k_{rdc} to the shear portion of the interaction. An example of this approach is illustrated in Section 6.3.8.10.

6.3.6.3.2 True Stress Approach

To remove the conservatism from the calculation of margin for shear-bending interaction, a different approach may be undertaken. This approach calculates the margin of safety for specific locations in the cross section which may be

Copyright 2016 Lockheed Martin Corporation.
Note: The current version is always the version on the Lockheed Martin network.

critical, using true stresses at those locations. The margin of safety is, then, the minimum of the margins thus obtained. This requires an understanding of where in the cross section the shear stress may be critical.

To calculate the margin at a critical location, calculate the true bending stress and strain at the extreme fiber location using the method outlined in Table 6.3.2-3 for a symmetric section or Table 6.3.3-3 for an unsymmetrical section. The stress at an intermediate fiber location can then be determined by a linear ratio of the strains per Table 6.3.2-2. Since this calculation is using actual fiber stress within the cross section, it is compared to F_{tu}, rather than some type of bending modulus. Calculate the bending ratio at this location as

$$R_{bt} = f_i/F_{tu}$$ **Equation 6.3.6-17**

where
f_i is the true bending stress at the critical location calculated using Section 6.3.2.1 (psi)
F_{tu} is the allowable ultimate tensile stress (psi)

Using the method presented in Section 6.3.2.3 or 6.3.3.3, determine the shear peaking factor and calculate the shear stress for the area located between the critical location and the extreme fiber and form the shear stress ratio, R_s

$$R_s = f_s/F_{su}$$ **Equation 6.3.6-18**

where
f_s is the applied shear stress including the shear peaking factor per Equation 6.3.2-10 (psi)
F_{su} is the ultimate allowable shear stress (psi)

If the section is involved in complex bending, obtain both $f_{sx'}$ and $f_{sy'}$ per Section 6.3.5.1 and calculate $R_{s\text{-}x'}$ and $R_{s\text{-}y'}$ and R_s as

$$R_{s\text{-}x'} = f_{s\text{-}x'}/F_{su}$$
$$R_{s\text{-}y'} = f_{s\text{-}y'}/F_{su}$$
$$R_s = \sqrt{R_{s-x'}^2 + R_{s-y'}^2}$$ **Equation 6.3.6-19**

where
$f_{s\text{-}x'}$, $f_{s\text{-}y'}$ are the applied shear stresses including the shear peaking factor about the principal neutral axes per Equation 6.3.5-6 (psi)
F_{su} is the ultimate allowable shear stress (psi)

Note for analysis using Equations 6.3.6-18 and 6.3.6-19, the calculation of the shear stress is the shear stress at the same location within the cross section for which the true bending stress ratio has been calculated. Then calculate the Margin of Safety using a circular interaction curve as

$$M.S._{est} = \frac{1}{\sqrt{R_s^2 + R_{bt}^2}} - 1$$ **Equation 6.3.6-20**

where
R_{bt} is the true bending stress ratio from Equation 6.3.6-17
R_s is the shear stress ratio from Equation 6.3.6-18 or 6.3.6-19

Again this is not a true margin of safety but an estimated margin. The true margin can be found by iterating as described in the discussion associated with Equation 6.3.6-16. In the case of the true stress interaction, the bending ratio, R_b, can no longer be directly ratioed in the determination of k_{rdc}. As the moment is reduced by k_{rcd}, since the intermediate fiber stresses due to bending are not linear, a new stress, f_i, must be determined for each iteration of k_{rdc}. As with the maximum stress approach, R_s is also not linear and a new C_{shear} must be incorporated into each iteration of k_{rdc}. An example of this approach is illustrated in Section 6.3.8.9. The same caution applies for this approach as for the Maximum Shear/Maximum Bending approach concerning the difference between the estimated margin of safety and the true margin of safety, *i.e.*, the difference between the two is not usually significant.

Copyright 2016 Lockheed Martin Corporation.
Note: The current version is always the version on the Lockheed Martin network.

6.3.6.4 Interaction – Simple or Complex Bending with Tension and Shear Stress

When shear is added to the bending and tension interaction on a section, the methods outlined in previous sections need to be modified to account for the additional stress due to axial tension loading to correctly assess the margin.

Determine the ratios for bending, R_b, and tension, R_t, the material plasticity factor γ, k_{geom} and $r_{combined}$ for the bending and tension loads per Section 6.3.6.1, and using Figure 6.3.6-2 determine $R_{t\text{-}allow}$ and $R_{b\text{-}allow}$. However, do not calculate the margin, as the degree of plasticity, k_{plas}, must first be determined. Recall that the degree of plasticity for simple bending is the ratio of the difference in stress between the applied bending stress and the material proportional limit and the difference in stress between the ultimate strength and the proportional limit. The stress interaction curve of Figure 6.3.6-2 will be used in the calculation of the degree of plasticity.

The applied ratios, R_b and R_t, are plotted on Figure 6.3.6-2 as point A and the line from the origin, O, to point A is extended to where it intersects the appropriate interaction curve. This intersection point is denoted point B. Now an additional point which represents the stress ratios at the proportional limit can be plotted and labeled point D.

These ratios can be calculated from

$$R_{t\text{-}tp} = R_t F_{tp}/f_{total}$$ **Equation 6.3.6-21**

$$R_{b\text{-}tp} = R_b F_{tp}/f_{total}$$

$$\text{If } F_{tp} \geq f_{total} \text{ then section is elastic and } k_{plas}=0.0$$

where
R_b is the applied bending moment ratio from Equation 6.3.6-1 or Equation 6.3.6-2
R_t is the applied axial tension load ratio from Equation 6.3.6-3
F_{tp} is the proportional limit of the material, calculated from Equation 3.3.1-11 (psi)
f_{total} is the maximum total applied bending stress plus any axial (P/A) stress. (psi)

If $k_{plas} = 0.0$, the stresses are below the proportional limit of the material and no shear peaking is required ($C_{shear\text{-}x'} = C_{shear\text{-}y'} = 1.0$) effectively reducing the shear stress calculation to $f_s=VQ/(It)$.

If the stresses are not below the proportional limit, plot $R_{t\text{-}tp}$ and $R_{b\text{-}tp}$ on Figure 6.3.6-2 as point D. It should fall on the line represented by OA and OB. Calculate the degree of plasticity, k_{plas}, as

$$k_{plas} = (R_t - R_{t\text{-}tp}) / (R_{t\text{-}allow} - R_{t\text{-}tp}) \quad \text{–OR-}$$

$$k_{plas} = (R_b - R_{b\text{-}tp}) / (R_{b\text{-}allow} - R_{b\text{-}tp})$$ **Equation 6.3.6-22**

$$\text{If } R_b > 1.0, \text{ then set } k_{plas} = 1.0 \text{ (fully plastic)}$$

where
R_t, R_b are the applied tension and bending ratios, respectively, per Section 6.3.6.1
$R_{t\text{-}tp}$, $R_{b\text{-}tp}$ are the tension and bending ratios at the proportional limit of the material, respectively per Equation 6.3.6-21
$R_{t\text{-}allow}$, $R_{b\text{-}allow}$ are the allowable tension and bending ratios, respectively, from Figure 6.3.6-2, Point B

Calculate the geometric factor, k_{inv}, per Equation 6.3.2-12 for symmetric sections or 6.3.3-6 for unsymmetrical sections. If the section is undergoing complex bending calculate $k_{inv\text{-}x'}$ and $k_{inv\text{-}y'}$. Then C_{shear} can be determined from Equation 6.3.2-14 for simple bending or $C_{shear\text{-}x'}$ and $C_{shear\text{-}y'}$ can be determined from Equation 6.3.5-10 for complex bending.

The maximum shear stress can be calculated using Equation 6.3.2-11 for simple bending or 6.3.5-6 for complex bending. The shear stress ratio can be calculated from Equations 6.3.6-13 or 6.3.6-18 for simple bending or 6.3.6-14 or 6.3.6-19 for complex bending. The bending-tension utilization factor U_{bt} can be found from

$$U_{bt} = R_t/R_{t\text{-}allow} \quad \text{–OR-} \quad U_{bt} = R_b/R_{b\text{-}allow}$$ **Equation 6.3.6-23**

where
R_t, R_b are the applied tension and bending ratios, respectively, per Section 6.3.6.1

Copyright 2016 Lockheed Martin Corporation.
Note: The current version is always the version on the Lockheed Martin network.

$R_{t\text{-}allow}$, $R_{b\text{-}allow}$ are the allowable tension and bending ratios, respectively, from Figure 6.3.6-2, Point B

The estimated margin of safety for combined bending and shear can be calculated as

$$M.S._{est} = \frac{1}{\sqrt{U_{bt}^2 + R_s^2}} - 1 \qquad \textbf{Equation 6.3.6-24}$$

Where
U_{bt} is the applied bending-tension utilization ratio from Equation 6.3.6-23
R_s is the applied shear stress ratio from Equations 6.3.6-13 or 6.3.6-14 for the maximum bending/maximum shear approach or Equations 6.3.6-18 or Equations 6.3.6-19 for the true stress approach.

To obtain a true margin, iterate by varying the applied loads in the same proportion until the margin is zero. This load becomes the allowable load and the true margin is given by Equation 6.3.6-16. See Sections 6.3.6.3.1 and 6.3.6.3.2 for discussions of this iterative process.

6.3.6.5 Interaction – Simple or Complex Bending with Compression and Shear Stress

Determine the ratios for bending and compression per Section 6.3.6.2, and using Figure 6.3.6-2 with $r=1$, determine $R_{c\text{-}allow}$ and $R_{b\text{-}allow}$. However do not calculate the margin as the degree of plasticity, k_{plas}, must first be determined. As with tension stress, the interaction curve of Figure 6.3.6-2 will be used to determine the degree of plasticity.

Calculate the stress ratios at the proportional limit from

$$R_{c\text{-}tp} = R_c F_{tp}/f_{total}$$
$$R_{b\text{-}tp} = R_b F_{tp}/f_{total} \qquad \textbf{Equation 6.3.6-25}$$
$$\text{If } F_{tp} > f_{total}\text{, then section is elastic and } k_{plas}=0.0$$

where
R_b is the applied bending moment ratio from Equation 6.3.6-1 or Equation 6.3.6-2
R_c is the applied axial compression load ratio from Equation 6.3.6-11
F_{tp} is the proportional limit of the material, calculated from Equation 3.3.1-11 (psi)
f_{total} is the maximum total applied bending stress plus any axial (P/A) stress. (psi)

If $k_{plas} = 0.0$, the stresses are below the proportional limit of the material and no shear peaking is required ($C_{shear\text{-}x'} = C_{shear\text{-}y'} = 1.0$) effectively reducing the shear stress calculation to $f_s=VQ/(It)$.

If the bending stresses are not below the material's proportional limit, plot $R_{c\text{-}tp}$ and $R_{b\text{-}tp}$ on Figure 6.3.6-2 as point D. It should fall on the line represented by OA and OB. Calculate the degree of plasticity, k_{plas}, as

$$k_{plas} = (R_c - R_{c\text{-}tp}) / (R_{c\text{-}allow} - R_{c\text{-}tp}) \quad \text{–OR-} \qquad \textbf{Equation 6.3.6-26}$$
$$k_{plas} = (R_b - R_{b\text{-}tp}) / (R_{b\text{-}allow} - R_{b\text{-}tp})$$
$$\text{If } R_b > 1\text{, then set } k_{plas} = 1.0 \text{ (fully plastic)}$$

where
R_c, R_b are the applied compression and bending ratios, respectively, per Section 6.3.6.2
$R_{c\text{-}tp}$, $R_{b\text{-}tp}$ are the ratioed compression and bending ratios at the proportional limit of the material, respectively, from Equation 6.3.6-23
$R_{c\text{-}allow}$, $R_{b\text{-}allow}$ are the allowable compression and bending stress, respectively, from Figure 6.3.6-2, point B

Calculate the geometric factor, k_{inv}, per Equation 6.3.2-12 for symmetric sections or 6.3.3-6 for unsymmetrical sections. If the section is undergoing complex bending calculate $k_{inv\text{-}x'}$ and $k_{inv\text{-}y'}$. Then C_{shear} can be determined from Equation 6.3.2-14 for simple bending or $C_{shear\text{-}x'}$ and $C_{shear\text{-}y'}$ can be determined from Equation 6.3.5-10 for complex bending.

Copyright 2016 Lockheed Martin Corporation.
Note: The current version is always the version on the Lockheed Martin network.

The maximum shear stress can be calculated using Equation 6.3.2-11 for simple bending or 6.3.5-6 for complex bending. The shear stress ratio can be calculated from Equations 6.3.6-13 or 6.3.6-18 for simple bending or 6.3.6-14 or 6.3.6-19 for complex bending. The bending-compression utilization factor U_{bc} can be found from

$$U_{bc} = R_c/R_{c\text{-}allow} \text{ –OR- } U_{bc} = R_b/R_{b\text{-}allow}$$ **Equation 6.3.6-27**

where

R_c, R_b are the applied compression and bending ratios, respectively, per Section 6.3.6.2

$R_{c\text{-}allow}$, $R_{b\text{-}allow}$ are the allowable compression and bending ratios, respectively, from Figure 6.3.6-2, Point B

The estimated margin of safety for combined bending and shear is then given by

$$M.S._{est} = \frac{1}{\sqrt{U_{bc}^2 + R_s^2}} - 1$$ **Equation 6.3.6-28**

Where

U_{bc} is the applied bending-tension utilization ratio from Equation 6.3.6-23

R_s is the applied shear stress ratio from Equations 6.3.6-13 or 6.3.6-14 for the maximum bending/maximum shear approach or Equations 6.3.6-18 or Equations 6.3.6-19 for the true stress approach.

To obtain a true margin, iterate by varying the applied loads in the same proportion until the margin is zero. This load becomes the allowable load and the true margin is given by Equation 6.3.6-16. See Sections 6.3.6.3.1 and 6.3.6.3.2 for discussions of this iterative process.

6.3.7 UNIX/PC Based Analysis Tools/Guidance

6.3.7.1 UNIX Based Analysis Tools

The IDAT (Integrated Detail Analysis Tools) suite contains the program PLASBEND which is based on the methodology presented in this section. It provides a complete solution including determination of the plastic bending neutral axis and interaction with shear. It also allows the user to enter a crippling cutoff stress and the location for which the crippling stress is critical. IDAT/PLASBEND is available on both UNIX and PC based platforms. This is the tool recommended for all new aircraft programs. The legacy IDAT/SM53 tool performs the neutral axis shift but cannot handle applied shear loads or crippling cutoff stresses.

6.3.7.2 Finite Element Models and Plastic Bending

With the advent of high speed computing and large amounts of available memory, finite element models have gotten increasingly complex and more detailed. Often, even in airframe or multi-element component models, beams are modeled with multiple elements across the cross section. These models may be run linearly or geometrically nonlinear. Once the results are available, the question, which must be addressed by the analyst, is “If these are the stresses what is my allowable?” The temptation is to take the bending modulus of rupture and treat it as an allowable stress, comparing the extreme fiber stress obtained from a finite element model to this mathematical convenience. **This is not correct and should not be done.** Instead, a free-body of the appropriate elements within the cross section should be generated to define the applied moment, m_{appl}. Use this to compare to the plastic bending allowable moment, M_{allow}, to calculate the margin of safety using Equation 6.3.2-3.

If the finite element model involved is run including material nonlinearity the plastic bending approach outlined in Section 6.3 should not be used. Instead the user should use a full range stress-strain curve for the material, comparing strains obtained from the model to the data in this curve. The method for generating such a stress-strain curve is outlined in PM4057 Section 3.3.1.7. The strength analysis method for plastic bending appropriate for use with material nonlinear FEM analysis is beyond the scope of this section and the analyst is cautioned that the results may be unconservative without guidance from some alternate source.

Copyright 2016 Lockheed Martin Corporation.
Note: The current version is always the version on the Lockheed Martin network.

6.3.8 Analysis Example of Plastic Bending

In this section some examples of plastic bending calculations will be given to illustrate the methodology.

Section	Example Type	Discussion
6.3.8.1	Simple Bending of a Symmetric Section	Symmetric I-section
6.3.8.2	Simple Bending of a Symmetric Section with Intermediate Fiber Stress Calculation	Same I-section as 6.3.8.1, but additional calculation of stress at y_i
6.3.8.3	Simple Bending of an Unsymmetrical Section	T-Section – low b/t, thus no crippling. Analysis about centroid axis.
6.3.8.4	Simple Bending of an Unsymmetrical section with neutral axis shift	T-Section of Example 6.3.8.3, but accounting for the shift in the neutral axis
6.3.8.5	Simple Bending of an Unsymmetrical section with Crippling of Leg.	C-channel with neutral axis shift.
6.3.8.6	Simple Bending of Symmetric Section in Two Axes	Same I-section as 6.3.8.1, but with moments in both x and y
6.3.8.7	Combined Bending + Axial Tension of a symmetric section	Same I-section as 6.3.8.1, but with axial tension load and moments in both x and y
6.3.8.8	Combined Bending + Axial Compression of a symmetric section	Symmetric I-section, assumed stable for column buckling, axial compression loads and moment about x axis. Flanges also stable for crippling.
6.3.8.9	Example 9 Combined Bending + Shear of a Symmetric Section	Same I-section as 6.3.8.1 but with an applied moment and shear load
6.3.8.10	Example 10 – Combined Bending of an Unsymmetrical section with Neutral Axis Shift + Shear	Same T-Section as 6.3.8.4 but with an applied moment and shear load

Copyright 2016 Lockheed Martin Corporation.
Note: The current version is always the version on the Lockheed Martin network.

6.3.8.1 Example 1 -Simple Bending of Symmetric Section

Determine the M.S. for bending moment of 40000 in-lb applied about the x axis of the beam shown.

Material

Aluminum 7475T7351 Bare Plate (1.5-2.0 in), LT

F_{tu} = 71,000 psi F_{ty} = 60,000 psi

E= 10.3x10^6 psi e_o=0.080 in/in (use e_o=0.050)

Calculate material constants

$e_u = e_o + F_{tu}/E = 0.05 + 71000/10.3x10^6 = 0.0569$ in/in

$e_{P_{tu}} = e_u - F_{tu}/E = 0.0569 - 71000/10.3x10^6 = 0.050$ in/in

$n_t = \log(e_{P_{tu}}/0.002)/\log(F_{tu}/F_{ty})$

$= \log(0.0500/0.002)/\log(71000/60000) = 19.12$

Sketch

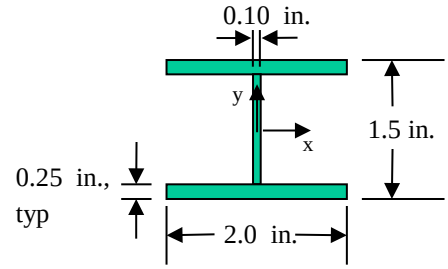

Solution Step	Calculation	Result
Determine I_x for section	$I = 1/12[2(1.5)^3-\{(2.0-0.10)(1.5-2\bullet0.25)^3\}]$	$I=0.4042\ in^4$
Determine y_{bar} for section	*By inspection*	$y_{bar}=0.75=c$
Determine A for section	$A=2\bullet0.25\bullet2+0.10(1.5-2\bullet0.25)$	$A=1.1\ in^2$
Determine Q for area above N.A.	$Q = \Sigma Ay_i = 2\bullet0.25\bullet(0.75-0.25/2)+(0.75-.25)\bullet0.10\bullet0.50/2$	$Q=0.325\ in^3$
Determine k	$k=2Q/(I/c) = 2\bullet0.325/(0.4042/0.75)$	$k=1.206$
Determine $f_{o\text{-}ult}$	$f_o = \frac{6F_{tu}}{e_u^2}\left[\frac{F_{tu}^2}{3E^2}+\left(\frac{e_{p_{tu}}F_{tu}}{E}\right)\frac{(n_t+1)}{(n_t+2)}+\frac{n_t e_{p_{tu}}^2}{(2n_t+1)}\right]-2F_{tu}$ $f_o = \frac{6\bullet71000}{0.0569^2}\left[\frac{71000^2}{3\bullet10{,}300{,}000^2}+\left(\frac{0.0500\bullet71000}{10{,}300{,}000}\right)\frac{(19.12+1)}{(19.12+2)}+\frac{19.12\bullet0.0500^2}{(2\bullet19.12+1)}\right]-2\bullet$	$f_o = 63569$ *psi*
Determine $(mc/I)_b$	$(mc/I)_b = f + f_o(k-1) = 71000 + 63569(1.206-1)$	$(mc/I)_b$ = *84095 psi*
Determine M_{allow}	$M_{allow} = (mc/I)_b(I/c) = 84095(0.4042/0.75)$	M_{allow} = *45322 in-lb*
Calculate M.S.(plastic)	M.S. = M_{allow} / $m_{applied}$ – 1 = *45322/40000-1*	M.S.(plastic) = ***+0.13***

Copyright 2016 Lockheed Martin Corporation.
Note: The current version is always the version on the Lockheed Martin network.

6.3.8.2 Example 2 – Simple Bending of Symmetric Section with Intermediate Fiber Stress Calculation

If the outer fiber stress is at F_{tu}, calculate the stress at y=0.5 in, on the cap/web intersection.

Material
Aluminum 7475T7351 Bare Plate (1.5-2.0 in), LT
F_{tu} = 71,000 psi F_{ty} = 60,000 psi
E= 10.3×10^6 psi e_o=0.080 in/in (use e_o=0.050)
n = 15

Calculate material constants
$e_u = e_o + F_{tu} / E = 0.05 + 71000/10.3\times10^6 = 0.0569$ in/in
$e_{p_{tu}} = e_u - F_{tu}/E = 0.0569 - 71000/10.3\times10^6 = 0.0500$ in/in
$n_t = \log(e_{p_{tu}}/0.002)/\log(F_{tu}/F_{ty})$
$= \log(0.0500/0.002)/\log(71000/60000) = 19.12$

Sketch

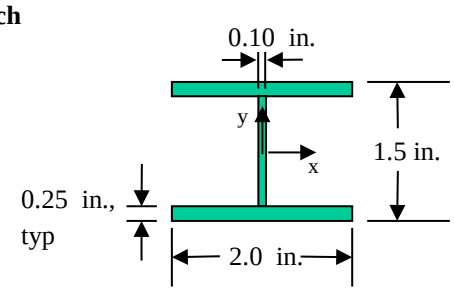

Solution Step	Calculation		Result
Determine I_x for section	$I = (1/12)[2(1.5)^3-\{(2.0-0.10)(1.5-2\cdot0.25)^3\}]$		$I=0.4042\ in^4$
Determine y_{bar} for section	*By inspection*		$y_{bar}=0.75 = c$
Determine A for section	$A=2\cdot0.25\cdot2+0.10(1.5-2\cdot0.25)$		$A=1.1\ in^2$
Determine Q for area above N.A.	$Q = \Sigma Ay_i = 2\cdot0.25\cdot(0.75-0.25/2)+(0.75-.25)\cdot0.10\cdot0.50/2$		$Q=0.325\ in^3$
Determine k	$k=2Q/(I/c) = 2\cdot0.325/(0.4042/0.75)$		k=1.206
Generate the Stress-strain Curve	Stress	Strain $e = f / E + e_{p_{tu}}(f / F_{tu})^{n_t}$	
	0	0	
	14048	0.00136	
	28097	0.00273	
Proportional Limit	$F_{ty}(0.05)^{1/n}=60000(0.05)^{1/15}=49138$	0.00481	
	52758	0.00529	
	56378	0.00608	
F_{ty}	60000	0.00783	
	61571	0.00926	
	63143	0.01144	
	64714	0.01478	
	66286	0.01988	
	67857	0.02762	
	69429	0.03933	
F_{tu}	71000	0.05689	
Perform intermediate strain calculation c (N.A. to extreme fiber) :0.75 in c_i (N.A to intermediate fiber):0.50 in e_u (strain at extreme fiber): 0.0569 in/in e_i (strain at c_1) =e(c_1/c)= .0379 in/in	e_a 0.02762	f_a 67857	Interpolate: $f_i = f_a + (e_i - e_a)(f_b - f_a)/(e_b - e_a)$ $= 67857+(0.0379-0.02762)(69429-67857)/(0.03933-0.02762) = 69237$ psi
	e_i 0.0379	f_i	
	e_b 0.03933	f_b 69429	
Based on f_i, calculate $e_{i\text{-}calc}$	$e_{i\text{-}calc} = f_i / E + e_{p_{tu}}(f_i / F_{tu})^{n_t} = 69237/10.3\times10^6+0.0500(69237/71000)^{19.12} = 0.03764$		$\Delta = e_i - e_{i\text{-}calc} = 0.0379 - 0.03764 = 0.00026$
Adjust calculated intermediate stress	$f_{i\text{-}new} = f_i + (f_b - f_i) / [(e_b - e_i)/0.0001]\Delta e/0.0001 = 69237 + (69429-69250)/[(0.03933-.0379)/0.0001]\cdot(0.00026/0.0001) = 69272$		$f_{i\text{-}new} = 69272$ psi
Based on $f_{i\text{-}new}$, recalculate $e_{i\text{-}calc}$	$e_{i\text{-}calc} = f_{i\text{-}new} / E + e_{p_{tu}}(f_{i\text{-}new} / F_{tu})^{n_t} = 69272/10.3\times10^6+0.0500(69272/71000)^{19.12} = 0.03794$		$\Delta = e_{i\text{-}calc} - e_i = 0.03794 - 0.0379 = 0.00004$
Intermediate Fiber Stress:			***f_i = 69272 psi***

Copyright 2016 Lockheed Martin Corporation.
Note: The current version is always the version on the Lockheed Martin network.

6.3.8.3 Example 3 -Simple Bending of an Unsymmetrical section

Given: The T-Section of dimensions shown
Determine the M.S. for bending moment of 5000 in-lb applied about the x axis. Calculate $(mc/I)_b$ about the centroid axis. (**This is incorrect and is done for illustration only**)

The section is unsymmetrical, therefore it will need to be divided into two subsections per Section 6.3.3

Material: Aluminum 7475T7351 Bare Plate (1.5-2.0 in), LT
F_{tu} = 71,000 psi F_{ty} = 60,000 psi
E= 10.3×10^6 psi e_o = 0.080 in/in (use e_o = 0.050)
n = 15

Calculate material constants

$e_u = e_o + F_{tu} / E = 0.05 + 71000/10.3\times10^6 = 0.0569$ *in/in*

$e_{p_{tu}} = e_u - F_{tu}/E = 0.0569 - 71000/10.3\times10^6 = 0.0500$ *in/in*

$n_t = \log(e_{p_{tu}}/0.002)/\log(F_{tu}/F_{ty})$

$= \log(0.0500/0.002)/\log(71000/60000) = 19.12$

<u>At Ultimate :</u>

Sketch

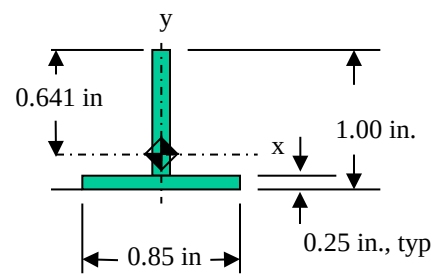

Geometry: $I_{x\text{-section}}$ = 0.03480 in^4 $c_{smaller}$=0.359 in c_{larger} = 0.641 in
b/t = 0.75/0.25 = 3.0 (Flange is stable $F_{cc} = F_{tu}$)

$$f_o = \frac{6F_{tu}}{e_u^{\,2}}\left[\frac{F_{tu}^{\,2}}{3E^2} + \left(\frac{e_{ptu}F_{tu}}{E}\right)\frac{(n_t+1)}{(n_t+2)} + \frac{n_t e_{ptu}^2}{(2n_t+1)}\right] - 2F_{tu}$$

$$f_o = \frac{6\bullet 71000}{0.0569^2}\left[\frac{71000^2}{3\bullet 10{,}300{,}000^2} + \left(\frac{0.0500\bullet 71000}{10{,}300{,}000}\right)\frac{(19.12+1)}{(19.12+2)} + \frac{19.12\bullet 0.0500^2}{(2\bullet 19.12+1)}\right] - 2\bullet 71000 = 63569\,psi$$

Subsection 1
Tension Side

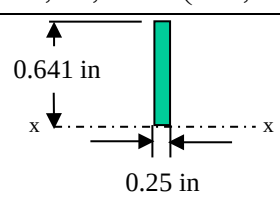

I_o = 0.005487 in^4 ybar=0.3205 in A=0.1603 in^2

Subsection 2
Compression Side

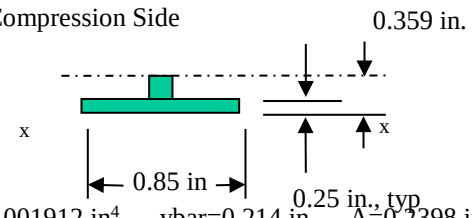

I_o = 0.001912 in^4 ybar=0.214 in A=0.2398 in^2

Solution Step	Calculation	Result	Solution Step	Calculation	Result
Calculate I_x for section about x-x	$I_{xx1} = I_o + Ad^2$ $= 0.005487 + 0.1603(0.3205)^2$	$I_{xx1} = 0.02195$ *in*^{4}	Calculate I_x for section about x-x	$I_{xx2} = I_o + Ad^2$ $= 0.001912 + 0.2398(0.214)^2$	$I_{xx} = 0.01285$ *in*^{4}
Calculate c	neutral axis of whole section to extreme fiber Subsection 1	$c_{larger} = 0.641$ *in*	Calculate c	neutral axis of whole section to extreme fiber Subsection 2	$c_{smaller} = 0.359$ *in*
Calculate Q for Subsection 1	$Q_1 = \Sigma Ay_i = 0.25\bullet0.641(0.641/2)$	$Q_1 = 0.0513$ *in*^{3}	Calculate Q for Subsection 2	$Q_2 = \Sigma Ay_i = 0.85\bullet0.25\bullet(0.359-0.25/2) + (0.359-0.25)\bullet0.25(0.359-0.25)/2$	$Q_2 = 0.0512$ *in*^{3}
Calculate k for Subsection 1	$k=Q_1/(I_{xx1}/c_{larger}) = 0.0513/(0.02195/0.641)$	$k_1 = 1.50$	Calculate k for Subsection 2	$k=Q_2/(I_{xx2}/c_{smaller}) = 0.0512/(0.1285/0.359)$	$k_2 = 1.43$

Copyright 2016 Lockheed Martin Corporation.
Note: The current version is always the version on the Lockheed Martin network.

Calculation of Stress-strain Curve and Intermediate Fiber Stress

For this problem, assume the outer fiber at $c = 0.641$ in. is not critical in crippling, so it is at F_{tu}, e_u. The strain at the extreme fiber at $c = -0.359$ in. is calculated from Equation 6.3.2-10 and then the stress must be determined by iteration or through the use of interpolation of values from a stress-strain plot. First, generate points for the stress-strain plot.

Generate the Stress-strain Curve	Stress	Strain $e = f / E + e_{p_{tu}}(f / F_{tu})^{n_t}$
	0	*0*
	14048	*0.00136*
	28097	*0.00273*
Proportional Limit	$F_{ty}(0.05)^{1/n} = 60000(0.05)^{1/15} = 49138$	*0.00481*
	52758	*0.00529*
	56378	*0.00608*
F_{ty}	*60000*	*0.00783*
	61571	*0.00926*
	63143	*0.01144*
	64714	*0.01478*
	66286	*0.01988*
	67857	*0.02762*
	69429	*0.03933*
F_{tu}	*71000*	*0.05689*

Calculate the strain and interpolate to determine the stress

Perform intermediate strain calculation c (N.A. to extreme fiber) :*0.641 in* c_i (N.A to intermediate fiber):*0.359 in* e_u (strain at extreme fiber): *0.05689 in/in* e_i (strain at c_1) $e_u(c_i/c)$= *.03186 in/in*	e_a *0.02762*	f_a *67857*	Interpolate: $f_i = f_a + (e_i - e_a)(f_b - f_a)/(e_b - e_a)$ $= 67857+(0.03933-0.03186)(69429-67857)/(0.03933-0.02762) = 68426$ *psi*
	e_i *0.03186*	f_i	
	e_b *0.03933*	f_b *69429*	

Based on f_i, calculate $e_{i\text{-}calc}$	$e_{i\text{-}calc} = f_i / E + e_{p_{tu}}(f_i / F_{tu})^{n_t} =$ $68426/10.3x10^6+0.0500(68426/71000)^{19.122} = 0.03132$	$\Delta = e_i - e_{i\text{-}calc} = 0.03186 - 0.03132 = 0.00054$
Adjust calculated intermediate stress	$f_{i\text{-}new} = f_i + (f_b - f_i) / [(e_b - e_i)/0.0001](\Delta e/0.0001) = 68426 + (69429-68426)/[(0.03933-0.03186)/0.0001] \bullet (0.00054/0.0001) = 68498$	$f_{i\text{-}new} = 68498$ *psi*
Based on $f_{i\text{-}new}$, recalculate $e_{i\text{-}calc}$	$e_{i\text{-}calc} = f_{i\text{-}new} / E + e_{p_{tu}}(f_{i\text{-}new}/F_{tu})^{n_t} =$ $68498/10.3x10^6+0.0500(68498/71000)^{19.122} = 0.03183$	$\Delta = e_i - e_{i\text{-}calc} = 0.03186 - 0.03183 = 0.00003$
Subsection 2 Extreme Fiber Stress:		$f_{c\text{-}smaller}$ **= 68498 psi**

Continued next page

Copyright 2016 Lockheed Martin Corporation.
Note: The current version is always the version on the Lockheed Martin network.

The stress in the outer fiber on the larger-c side is F_{tu} (71000 psi) while the stress at the outer fiber of the smaller-c side was calculated in the previous step as 68498. Now calculate the trapezoidal intercept stress and the modulus of rupture for each of the subsections.					
Subsection 1			**Subsection 2**		
			Calculate $e_{p:c\text{-}smaller}$, based on $f_{c\text{-}smaller}$, $e_{c\text{-}smaller}$	$f_{c\text{-}smaller}$= f=68498 $e_{c\text{-}smaller}$ = 0.03186 $e_{p:c\text{-}smaller}$= e – f/E =*0.03186-68498/10.3x10^6=0.02521 in/in*	
f_o calculated at F_{tu} in the material properties section at the beginning of the problem.		f_o=63569 psi	Calculate f_o @ $f_{c\text{-}smaller}$ f= $f_{c\text{-}smaller}$ e = $e_{c\text{-}smaller}$ e_p = $e_{p:c\text{-}smaller}$	$f_o = \frac{6f}{e^2}\left[\frac{f^2}{3E^2}+\left(\frac{e_p f}{E}\right)\frac{(n_t+1)}{(n_t+2)}+\frac{n_t e_p^2}{(2n_t+1)}\right]-2f$ $f_o = \frac{6\bullet 68498}{0.0319^2}\left[\frac{68498^2}{3\bullet 10{,}300{,}000^2}+\left(\frac{0.0252\bullet 68498}{10{,}300{,}000}\right)\frac{(19.12+1)}{(19.12+2)}+\frac{19.12\bullet 0.0252^2}{(2\bullet 19.12+1)}\right]-2\bullet 68498$	f_o = *58408 psi*
Calculate $mc/I)_{b\text{-}larger}$	$(mc/I)_{b\text{-}larger}$ = $f_{c\text{-}larger}$ + f_o(k-1) = *71000 + 63569(1.5-1)*	$(mc/I)_{b\text{-}larger}$ = *102785 psi*	Calculate $(mc/I)_{b\text{-}csmaller}$	$(mc/I)_{b\text{-}csmaller}$ = $f_{c\text{-}smaller}$ + f_o (k-1) = *68498 + 58408(1.43-1)*	$(mc/I)_{b\text{-}smaller}$ = *93613 psi*
Calculate $M_{allow\text{-}clarger}$	$M_{allow\text{-}clarger}$ = $(mc/I)_{b\text{-}clarger}$ • (I_{xx1}/c_{larger}) = *102785(0.02195/0.641)*	$M_{allow\text{-}clarger}$ = *3520 in-lb*	Calculate $M_{allow\text{-}csmaller}$	$M_{allow\text{-}csmaller}$ =$(mc/I)_{b\text{-}csmaller}$ • ($I_{xx2}/c_{smaller}$) = *93613(0.01285/0.359)*	$M_{allow\text{-}csmaller}$= *3351 in-lb*
Add the allowable moment from each subsection to obtain the total allowable moment and calculate margin of safety					
Calculate M_{allow}	M_{allow} =$M_{allow\text{-}clarger}$+$M_{allow\text{-}csmaller}$= *3520 + 3351*				M_{allow} = *6871 in-lb*
Calculate M.S.	M_{allow} / m_{appl} – 1 = *6871 / 5000 – 1 =*				M.S.(plastic) =***+0.37***

Copyright 2016 Lockheed Martin Corporation.
Note: The current version is always the version on the Lockheed Martin network.

6.3.8.4 Example 4 – Simple Bending of an Unsymmetrical section with Neutral Axis Shift

Given: The Tee Section of dimensions shown is Example 6.3.8.3
Determine the plastic neutral axis and resulting M.S.

From Example 3 Section 6.3.8.3: F_{tu} = 71000 psi; F_{ty} = 60000 psi E = 10.3x10^6 psi; e_o=0.080 in/in e_u =0.05689 in/in $e_{p_{tu}}$ = 0.0050 in/in; n_t = 19.12	
Subsection 1 - c_{larger}	**Subsection 2 - $c_{smaller}$**
From Example 3 Section 6.3.8.3 I=0.03480 in^4; I_{xx1} = 0.02195 in^4 c = 0.641 in; k = 1.50	From Example 3 Section 6.3.8.3: I=0.03480 in^4; I_{xx2} = 0.01285 in^4 c = 0.359 in; k = 1.43
From Example 3 Section 6.3.8.3 $f_{larger\text{-}c}$ = 71000 psi $f_{o\text{-}larger\text{-}c}$ = 63569 psi mc/I)$_b$ = 102785 psi M_{allow} = 3520 in-lb	From Example 3 Section 6.3.8.3 $f_{smaller\text{-}c}$ = 68498 psi $f_{o\text{-}smaller\text{-}c}$ = 58408 psi mc/I)$_b$ = 93613 psi M_{allow} = 3351 in-lb
Using the results from the previous example as the starting point, determine the neutral axis. Calculate the total load on each segment above and below the centroidal axis to determine the imbalance.	
$\Delta f_{larger\text{-}c}$ = 71000-63569 = 7431 psi	$\Delta f_{smaller\text{-}c\text{-}1}$ = 68498-58408 = 10090 psi At cap/web intersection: $\Delta f_{smaller\text{-}c\text{-}2}$ =10090(0.109/0.359) = 3064 psi
$P_{larger\text{-}c}=A_{larger\text{-}c}(f_{o\text{-}larger\text{-}c} + 0.5\Delta f_{larger\text{-}c})$ = 0.25•0.641(63569 + 0.50•7431) = 10782 lbs	$P_{smaller\text{-}c\text{-}1}=A_{smaller\text{-}c\text{-}1}(f_{o\text{-}smaller\text{-}c}+0.5(\Delta f_{smaller\text{-}c\text{-}1}+\Delta f_{smaller\text{-}c\text{-}2}))$ $+ A_{smaller\text{-}c\text{-}2}(f_{o\text{-}smaller\text{-}c} + 0.5\Delta f_{smaller\text{-}c\text{-}2})$ = 0.25•0.85(58408 + 0.50(10090+3064)) + 0.25•0.109(58408 + 0.50•3064) = 13809+1633 = 15442 lbs
$P_{larger\text{-}c} < P_{smaller\text{-}c}$ – axis need to move down to increase upper area and decrease lower area	
Calculate the difference on load between upper and lower areas	Delta P = (15442-10782)/2 = 2330 lb
Make an estimate of the difference in area required	Avg Stress – Upper: 10782/(0.25•0.641) = 67282 psi Delta Area = 2330/67282 = 0.035 in^2
Calculate the new upper area	New Upper Area: 0.641•0.25 + 0.035 = 0.1953 in^2
Determine shape of new upper area	Maximum Area of Leg = 0.75•0.25 = 0.1875 in^2 Added Cap Area = 0.1953-0.1875 = 0.0078 in^2 Cap Thick: 0.0078/0.85 = 0.00918 in This indicates that the neutral axis must shift toward the base of the cap sufficiently to result in the new upper subsection being the entire leg + 0.00918 in of the cap.
Location of assumed neutral axis position	This results in an assumed location of the neutral axis at 0.2408 in from the base of the cap. Because this location is an estimation, try putting the neutral axis at the intersection of the leg and the cap, i.e. c_1 = 0.25.

Copyright 2016 Lockheed Martin Corporation.
Note: The current version is always the version on the Lockheed Martin network.

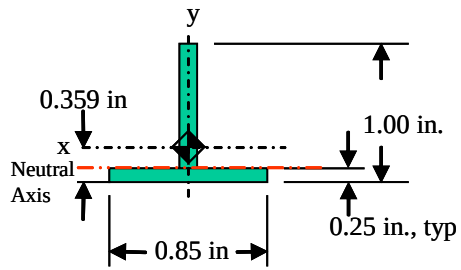

Section with Shifted Neutral Axis

Subsection 1 - c_{larger}	Subsection 2 - $c_{smaller}$		
The larger-c leg is still at F_{tu} and the modulus of rupture is unchanged: $f_{larger\text{-}c}$ = 71000 psi $f_{o\text{-}larger\text{-}c}$ = 63569 psi $mc/I)_b$ = 102785 psi	Calculate the strain at the outer fiber of c-smaller	$e_{smaller\text{-}c\text{-}c}$ = (0.25/0.75)(0.0569) = 0.01896	$e_{smaller\text{-}c\text{-}c}$ = 0.01896 in/in
	Guess f and calculate resulting strain; f_{guess} =65000 psi	e_{calc} = 65000/(10.3x10^6)+0.0500(65000/71000)$^{19.12}$ = 0.01555.	Increase f_{guess}.
	Guess f and calculate resulting strain; f_{guess} =66000 psi	e_{calc} = 66000/(10.3x10^6)+0.0500(66000/71000)$^{19.12}$ = 0.01878.	Increase f_{guess}.
	Guess f and calculate resulting strain; f_{guess} =66049 psi	e_{calc} = 66049/(10.3x10^6)+0.0500(66049/71000)$^{19.12}$ =0.01896.	e_{calc}=$e_{smaller\text{-}c}$ f=66049 psi
	Calculate $e_{p\text{-}smaller\text{-}c}$	$e_{p\text{-}smaller\text{-}c}$ = 0.01896 - 66049/ (10.3x10^6) = 0.01255	$e_{p\text{-}smaller\text{-}c}$ = 0.01255 in/in
	Calculate f_o $f_o = \frac{6f}{e^2}\left[\frac{f^2}{3E^2}+\left(\frac{e_p f}{E}\right)\frac{(n_t+1)}{(n_t+2)}+\frac{n_t e_p^2}{(2n_t+1)}\right]-2f$		

Copyright 2016 Lockheed Martin Corporation.
Note: The current version is always the version on the Lockheed Martin network.

	$f_o = \frac{6 \bullet 66049}{0.01896^2}\left[\frac{66049^2}{3 \bullet 10{,}300{,}000^2} + \left(\frac{0.01255 \bullet 66049}{10{,}300{,}000}\right)\frac{(19.12+1)}{(19.12+2)} + \frac{19.12 \bullet 0.01255^2}{(2 \bullet 19.12+1)}\right] - 2 \bullet 66049 = 52133 psi$
Calculate the total load on each segment above and below the assumed neutral axis to determine the imbalance.	
Subsection 1 - c_{larger}	**Subsection 2 - $c_{smaller}$**
$\Delta f_{larger\text{-}c}$ = 71000-63569 = 7431 psi	$\Delta f_{smaller\text{-}c}$ = 66049-52133 = 13916 psi
$P_{larger\text{-}c}=A_{larger\text{-}c\text{-}1}(f_{o\text{-}larger\text{-}c} + 0.5\Delta f_{larger\text{-}c})$ = 0.25•0.75(63569 + 0.50•7431) =12616	$P_{smaller\text{-}c}=A_{smaller\text{-}c}(f_{o\text{-}smaller\text{-}c} + 0.5\Delta f_{smaller\text{-}c})$ = 0.25•0.85(52133 + 0.50•13916) = 12557 lbs
Calculate the difference as a percent error: Percent Error = $100(P_{larger\text{-}c} - P_{smaller\text{-}c})/[(P_{larger\text{-}c} + P_{smaller\text{-}c})/2]$ = 100(12616-12557) / [(12616+12557)/2] = 0.47%	
This is a good match between the load carried by the upper subsection and the lower subsection. The plastic neutral axis is located at the interface between the leg and the cap when the section is fully plastic. It is located at the centroid when the section is fully elastic. As the section carries more bending moment and transitions from elastic to plastic the neutral axis shifts downward from one location to the other.	
Calculate section properties and k about the neutral axis and the modulus of rupture and determine the margin of safety	

Subsection 1 Tension Side

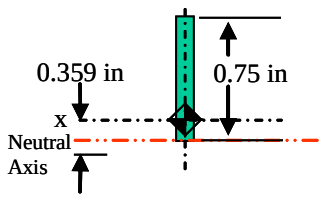

I_{na} = 0.00878 in^4 ybar=0.375 in A=0.1875 in^2

Subsection 2 Compression Side

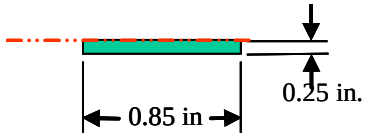

I_{na} = 0.001107 in^4 ybar=0.125 in A=0.2125 in^2

Solution Step	Calculation	Result	Solution Step	Calculation	Result
Calculate I_x for section about NA	$I_{NA1}= I_o + Ad^2$ $= 0.00878+ 0.1875(0.375)^2$	$I_{xx1}=$ *0.035156 in^4*	Calculate I_x for section about NA	$I_{NA2}= I_o + Ad^2$ $= 0.001107 + 0.2125(0.125)^2$	$I_{xx}=$ *0.00443 in^4*
Calculate c	neutral axis of whole section to extreme fiber Subsection 1	$c_{larger}=$*0.75 in*	Calculate c	neutral axis of whole section to extreme fiber Subsection 2	$c_{smaller}=$ *0.25 in*

Copyright 2016 Lockheed Martin Corporation.
Note: The current version is always the version on the Lockheed Martin network.

Calculate Q	$Q_1 = \Sigma Ay_i = 0.25 \cdot 0.75 \cdot 0.375$	$Q_1 = 0.0703125 in^3$	Calculate Q	$Q_2 = \Sigma Ay_i = 0.85 \cdot 0.25 \cdot 0.125$	$Q_2 = 0.02656\ in^3$
Calculate k	$k=Q_1/(I_{NA1}/c_{larger}) = 0.0703125/(0.035156/0.75)$	$k_1=1.50$	Calculate k	$k=Q_2/(I_{NA2}/c_{smaller}) = 0.02656/(0.00443/0.25)$	$k_2=1.50$
The section properties are used in conjunction with the final plastic bending calculations from the neutral axis determination to calculate the allowable moment and margin of safety.					
Subsection 1			**Subsection 2**		
Calculate $(mc/I)_{b\text{-larger-c}}$	$(mc/I)_{b\text{-clarger}} = f_{larger\text{-c}} + f_{o\text{-larger-c}}(k_{larger}-1) = 71000 + 63569(1.5-1)$	$(mc/I)_{b\text{-larger-c}} = 102785$ psi	Calculate $(mc/I)_{b\text{-smaller-c}}$	$(mc/I)_{b\text{-smaller-c}} = f_{smaller\text{-c}} + f_{o\text{-smaller-c}}(k_{smaller}-1) = 66049 + 52133(1.5-1)$	$(mc/I)_{b\text{-smaller-c}} = 92116$ psi
Calculate $M_{allow\text{-clarger}}$	$M_{allow\text{-clarger}} = (mc/I)_{b\text{-clarger}}(I_{xx1}/c_{larger}) = 102785(0.0351/0.75)$	$M_{allow\text{-clarger}} = 4810\ in\text{-}lb$	Calculate $M_{allow\text{-csmaller}}$	$M_{allow\text{-csmaller}} = (mc/I)_{b\text{-csmaller}}(I_{xx2}/c_{smaller}) = 92116(0.0044/0.25)$	$M_{allow\text{-csmaller}} = 1621\ in\text{-}lb$
Add the allowable moment from each subsection to obtain the total allowable moment and calculate margin of safety					
Calculate M_{allow}	$M_{allow} = M_{allow\text{-clarger}} + M_{allow\text{-csmaller}} = 4810+1621$			$M_{allow} = 6431\ in\text{-}lb$	
Calculate M.S.	$M_{allow} / m_{appl} - 1 = 6431 / 5000 - 1 =$			M.S.(plastic) = ***+0.29***	

When the shift in the neutral axis was not accounted for, as in the previous example, the allowable moment is 6871 in-lbs and the margin is 0.37 providing an unconservative result. Accounting for the shift in the neutral axis is a very important part of a plastic bending analysis of an unsymmetrical section. IDAT/PLASBEND automatically includes that as part of the analysis it performs.

Copyright 2016 Lockheed Martin Corporation.
Note: The current version is always the version on the Lockheed Martin network.

6.3.8.5 Example 5 – Simple Bending of an Unsymmetrical Section with Crippling

Given: The Channel Section of dimensions shown
Determine the M.S. for bending moment of -5000 in-lb applied about the x axis.
Section is unsymmetrical, therefore it will need to be divided into two subsections per Section 6.3.3. In addition, the neutral axis shift must be accounted for. The centroid axis of this section can be calculated to be at y=0.141 from the web outer face as shown in the figure below.

Material: Titanium 6AL-4V Annealed Extrusion (<2.0 in)
F_{tu} = 137000 psi F_{ty} = 124,000 psi
E= 16.0x10^6 psi e_o = 0.100 in/in (use e_o = 0.050)
n = 21

Calculate material constants

$e_u = e_o + F_{tu} / E$ = *0.05+137000/16x10^6 =0.0586 in/in*

$e_{p_{tu}} = e_u - F_{tu}/E$ *=0.0586-137000/16x10^6=0.0500 in/in*

$n_t = \log(e_{p_{tu}}/0.002)/\log(F_{tu}/F_{ty})$

= *log(0.0500/0.002)/log(137000/124000) = 32.29*

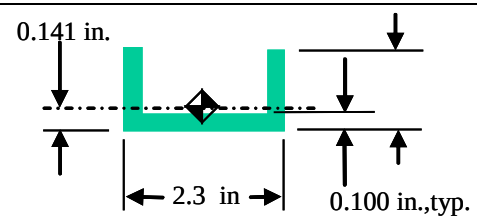

Sketch
Geometry: $I_{cg\text{-}section}$ = 0.008548 in^4 c_1=0.459 in c_2 = 0.141 in
b/t = 2.1/0.10 = 21.0 F_{cc} = 118000 psi (Web is crippling critical)

Calculate f_o

$$f_o = \frac{6F_{tu}}{e_u^{\,2}}\left[\frac{F_{tu}^{\,2}}{3E^2} + \left(\frac{e_{p_{tu}}F_{tu}}{E}\right)\frac{(n_t+1)}{(n_t+2)} + \frac{n_t e_{p_{tu}}^2}{(2n_t+1)}\right] - 2F_{tu}$$

$$f_o = \frac{6\bullet 137000}{0.0586^2}\left[\frac{137000^2}{3\bullet 16{,}000{,}000^2} + \left(\frac{0.0500\bullet 137000}{16{,}000{,}000}\right)\frac{(32.29+1)}{(32.29+2)} + \frac{32.29\bullet 0.0500^2}{(2\bullet 32.29+1)}\right] - 2\bullet 137000 = 125{,}997\,psi$$

Subsection 1 - c_{larger}			**Subsection 2 - $c_{smaller}$**		
I_{xx1} = 0.0016117+0.0918(0.459)^2=0.006447 in^4 c = 0.459 in; k = 1.50			I_{xx2} = 0.0002322+ 0.2382(0.0886)^2 = 0.002102 in^4 c = 0.141 in; k = 1.41		
Calculate the strain at the outer fiber of c-smaller	$e_{larger\text{-}c}$ = (0.459/0.141)0.00778 = 0.025326		The strain at the outer fiber of c-smaller is the strain at $f_{smaller\text{-}c}$ = 118000 psi (Crippling Stress)	$e_{smaller\text{-}c}$ = 118000/16x10^6 + 0.0500(118000/137000)$^{32.29}$ = 0.0078 in/in	$e_{smaller\text{-}c}$ = 0.0078 in/in
Guess f and calculate resulting strain; f_{guess} =132000 psi	e_{calc} = 132000/(16x10^6)+0.0500(132000/137000)$^{32.29}$ = 0.023302.	Increase f_{guess}.			

Copyright 2016 Lockheed Martin Corporation.
Note: The current version is always the version on the Lockheed Martin network.

Guess f and calculate resulting strain; f_{guess} =132500 psi	e_{calc} = 132500/(16x10^6)+0.0500(132500/137000)$^{32.29}$ = 0.025288.	Increase f_{guess}.			
Guess f and calculate resulting strain; f_{guess} =132509 psi	e_{calc} = 132509/(16x10^6)+0.0500•(132509/137000)$^{32.29}$ = 0.025326.	e_{calc}=$e_{larger-c}$ f=132509 psi			
Calculate $e_{p-larger-c}$	$e_{p-larger-c}$ = 0.025326 - 132509/ (16x10^6) = 0.0170	$e_{p-larger-c}$ = 0.0170 in/in	Calculate $e_{p-smaller-c}$	$e_{p-smallerc}$ = 0.00778-118000/16x10^6 = 0.0004	$e_{p-smaller-c}$ = 0.0004 in/in

Calculate f_o

$$f_o = \frac{6f}{e^2}\left[\frac{f^2}{3E^2} + \left(\frac{e_p f}{E}\right)\frac{(n_t+1)}{(n_t+2)} + \frac{n_t e_p^2}{(2n_t+1)}\right] - 2f$$

$$f_{o-larger-c} = \frac{6 \bullet 132509}{0.0253^2}\left[\frac{132509^2}{3 \bullet 16{,}000{,}000^2} + \left(\frac{0.0170 \bullet 132509}{16{,}000{,}000}\right)\frac{(32.29+1)}{(32.29+2)} + \frac{32.29 \bullet 0.0170^2}{(2 \bullet 32.29+1)}\right] - 2 \bullet 132509 = 109902\,psi$$

$$f_{o-smaller-c} = \frac{6 \bullet 118000}{0.0078^2}\left[\frac{118000^2}{3 \bullet 16{,}000{,}000^2} + \left(\frac{0.0004 \bullet 118000}{16{,}000{,}000}\right)\frac{(32.29+1)}{(32.29+2)} + \frac{32.29 \bullet 0.0004^2}{(2 \bullet 32.29+1)}\right] - 2 \bullet 118000 = 9228\,psi$$

Subsection 1- c_{larger}	**Subsection 2- $c_{smaller}$**
Calculate total load on each segment: $\Delta f_{larger-c}$ = 132509-109902 = 22607 psi	Calculate total load on each segment: $\Delta f_{smaller-c-1}$ = 118000 - 9228 = 108772 psi At cap/web intersection: $\Delta f_{smaller-c-2}$ =108772(0.041/0.141) = 31629 psi
$P_{larger-c}$=$A_{larger-c}$($f_{o-larger-c}$ + 0.5$\Delta f_{larger-c}$) = 2(0.10) (0.459)• (109902 + 0.50•22607) = 11127 lbs	$P_{smaller-c-1}$=$A_{smaller-c-1}$[$f_{o-smaller-c}$ + 0.5($\Delta f_{smaller-c-1}$+$\Delta f_{smaller-c-2}$)]+ $A_{smaller-c-2}$[$f_{o-smaller-c}$ + 0.5$\Delta f_{smaller-c-2}$] = 0.10(2.3)[9228 + 0.50(108772+31629)]+ 2(0.041)(0.10)[9228 + 0.50•31629] = 18269 + 205= 18474 lbs

$P_{larger-c} < P_{smaller-c}$ – axis need to move down to increase upper area and decrease lower area
After several iterations, the final neutral axis location is determined to be
c_1 = 0.50468, c_2 = 0.09532

Copyright 2016 Lockheed Martin Corporation.
Note: The current version is always the version on the Lockheed Martin network.

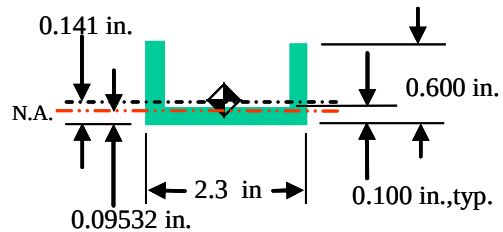

Section with Shifted Neutral Axis

Subsection 1 - c_{larger}			Subsection 2 - $c_{smaller}$
Calculate the strain at the outer fiber of c-larger	$e_{larger-c}$ = (0.50468/.09532)0.0077 8 = 0.04119	$e_{larger-c}$ = 0.04119 in/in	The smaller-c side is still at a maximum stress of the crippling stress $f_{smaller-c}$ = 118000 psi (Crippling Stress) $e_{smaller-c}$ = 118000/16x10^6 + 0.0500(118000/137000)$^{32.29}$ = 0.00778 in/in $e_{p-smallerc}$ = 0.00778-118000/16x10^6 = 0.000405
Guess f and calculate the resulting strain f_{guess}=136000 psi	e_{calc} = 136000/(16x10^6)+0.050 0(136000/137000)$^{32.29}$ = 0.047967.	Decrease f_{guess}	
Guess f and calculate the resulting strain f_{guess}=135215 psi	e_{calc} = 135215/(16x10^6)+0.050 0(135215/137000)$^{32.29}$ =0.04119.	e_{calc}=$e_{larger-c}$ f=135215 psi	
Calculate $e_{p-larger-c}$	$e_{p-largerc}$ = 0.04119 - 135215/ (16x10^6) = 0.03274	$e_{p-largerc}$ = 0.04119 - 135215/ (16x10^6) = 0.03274 in/in	

Calculate f_o

$$f_o = \frac{6f}{e^2}\left[\frac{f^2}{3E^2} + \left(\frac{e_p f}{E}\right)\frac{(n_t+1)}{(n_t+2)} + \frac{n_t e_p^2}{(2n_t+1)}\right] - 2f$$

$$f_{o-larger-c} = \frac{6 \bullet 135215}{0.04119^2}\left[\frac{135215^2}{3 \bullet 16{,}000{,}000^2} + \left(\frac{0.03274 \bullet 135215}{16{,}000{,}000}\right)\frac{(32.29+1)}{(32.29+2)} + \frac{32.29 \bullet 0.03274^2}{(2 \bullet 32.29+1)}\right] - 2 \bullet 135215 = 121775\,psi$$

$$f_{o-smaller-c} = \frac{6 \bullet 118000}{0.00778^2}\left[\frac{118000^2}{3 \bullet 16{,}000{,}000^2} + \left(\frac{0.0004 \bullet 118000}{16{,}000{,}000}\right)\frac{(32.29+1)}{(32.29+2)} + \frac{32.29 \bullet 0.0004^2}{(2 \bullet 32.29+1)}\right] - 2 \bullet 118000 = 10490\,psi$$

Copyright 2016 Lockheed Martin Corporation.
Note: The current version is always the version on the Lockheed Martin network.

Subsection 1 - c_{larger}	**Subsection 2 - $c_{smaller}$**
Calculate total load on each segment: $\Delta f_{larger\text{-}c\text{-}1}$ = 135215-121775 = 13440 psi At cap/web intersection: $\Delta f_{larger\text{-}c\text{-}2}$ =13440(0.00468/0.50468) = 125 psi	Calculate total load on each segment: $\Delta f_{smaller\text{-}c\text{-}1}$ = 118000 - 10490 = 107510 psi
$P_{larger\text{-}c}=A_{larger\text{-}c}(f_{o\text{-}larger\text{-}c} + 0.5\Delta f_{larger\text{-}c}) + A_{larger\text{-}c\text{-}2}[f_{o\text{-}larger\text{-}c} + 0.5\Delta f_{larger\text{-}c\text{-}2}]$= 2(0.10)(0.50)[121775 + 0.50(13440+125)] + 0.00468(2.3)(121775+0.50•125) = 12856+1311 = 14167 lbs	$P_{smaller\text{-}c\text{-}1}=A_{smaller\text{-}c\text{-}1}[f_{o\text{-}smaller\text{-}c} + 0.5(\Delta f_{smaller\text{-}c\text{-}1} + \Delta f_{smaller\text{-}c\text{-}2})]$ = 0.09532(2.3)(10490 + 0.50•107510) = 14085 lbs

Percent Error = $100(P_{larger\text{-}c} - P_{smaller\text{-}c})/[(P_{larger\text{-}c} + P_{smaller\text{-}c})/2]$=100(14167-14085) / [(14167+14085)/2] = 0.58%

This is a good match between the load carried by the upper subsection and the lower subsection. The plastic neutral axis is located at the interface between the leg and the cap when the section is fully plastic. It is located at the centroid when the section is fully elastic. As the section carries more bending moment and transitions from elastic to plastic the neutral axis shifts downward from one location to the other.

Calculate the properties for the section about the Neutral axis, k, modulus of rupture and margin of safety.

Subsection 1 Tension Side

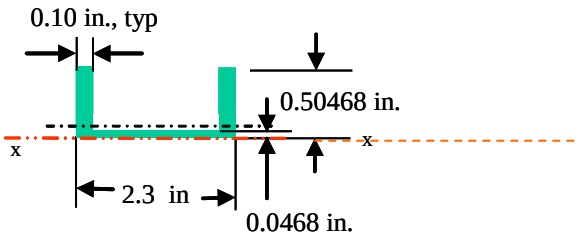

I_o = 0.002702 in^4 ybar=0.230158 in A=0.110764 in

Subsection 2 –Web/flange is critical in crippling

I_o = 0.000165996 in^4 ybar=0.04766 in A=0.21936 in

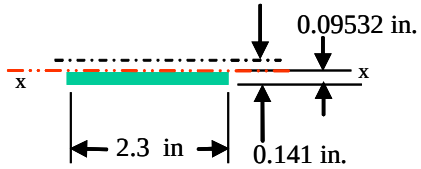

Solution Step	**Calculation**	**Result**	**Solution Step**	**Calculation**	**Result**
Calculate I_x for section about x-x	$I_{xx1}= I_o + Ad^2$ $= 0.002702+ 0.110764(0.230158)^2$	$I_{xx1}= 0.0085695\ in^4$	Calculate I_x for section about x-x	$I_{xx2}= I_o + Ad^2$ $= 0.000165996 + 0.21936(0.04766)^2$	$I_{xx2}= 0.000664\ in^4$
Calculate c	neutral axis of whole section to extreme fiber Subsection 1	$c_1=0.50468\ in$	Calculate c	Neutral axis of whole section to extreme fiber Subsection 2	$c_2= 0.09532\ in$
Calculate Q for Subsection 1	$Q = \Sigma Ay_i = 0.00468(2.3)(0.00468/2)+ 2(0.1)(0.5)(0.00468+0.25)$	$Q_1 = 0.02549\ in^3$	Calculate Q for Subsection 2	$Q = \Sigma Ay_i = 2.3(0.09532)(0.09532/2)$	$Q_2 = 0.01045\ in^3$
Calculate k for Subsection 1	$k_1=Q_1/(I_{xx1}/c_1) = 0.02549/(0.0085695/0.50468)$	$k_1=1.501$	Calculate k for Subsection 2	$k_2=Q_2/(I_{xx2}/c_2) = 0.01045/(0.000664/0.09532)$	$k_2=1.50$

Copyright 2016 Lockheed Martin Corporation.
Note: The current version is always the version on the Lockheed Martin network.

The section properties are used in conjunction with the plastic bending calculations used to determine the neutral axis location to calculate the allowable moment and margin of safety.

Subsection 1			Subsection 2 – Crippling Critical		
Solution Step	**Calculation**	**Result**	**Solution Step**	**Calculation**	**Result**
Summarizing, from the final iteration of the NA calculation		f_1=*135215 psi* f_o=*121775 psi*	Summarizing, from the final iteration of the NA calculation		F_{cc}=*118000 psi* f_o =*10490 psi*
Calculate $(mc/I)_b$	$(mc/I)_{b-1} = f_1 + f_o (k_1-1)$ = *135215 + 121775(1.501-1)*	$(mc/I)_b$ = *196224 psi*	Calculate $(mc/I)_b$	$(mc/I)_{b-cc} = f_{cc} + f_o (k_2-1)$ = *118000 + 10490(1.5-1)*	$(mc/I)_b$ = *123245 psi*
Calculate $M_{allow-1}$	$M_{allow-1} = (mc/I)_{b1} (I_{xx1}/c_1)$ = *196224(0.0085695/0.50468)*	$M_{allow-1}$ = *3332 in-lb*	Calculate $M_{allow-cc}$	$M_{allow-2}=(mc/I)_{b2} (I_{xx2}/c_2)$ = *123245(0.000664/0.09532)*	$M_{allow-cc}$= *858 in-lb*
Calculate M_{allow}	$M_{allow} = M_{allow-1}+M_{allow-cc}$= *3332 + 858*				M_{allow} = *4190 in-lb*
Calculate M.S.	$M_{allow} / m_{appl} – 1$ = *4190 / 5000 – 1 =*				M.S.(plastic) =***-0.16***

The critical failure mode is crippling and the margin is negative. At this point the section would need to be redesigned to increase its capability.

Copyright 2016 Lockheed Martin Corporation.
Note: The current version is always the version on the Lockheed Martin network.

6.3.8.6 Example 6 -Simple Bending of a Symmetric Section about Two Axes

Given: The I-beam of dimensions shown
Determine the M.S. for bending moment of 20000 in-lb applied about the x axis and 10000 in-lb applied about the y axis

This problem is very similar to Example I simple bending of a symmetric section with the same cross section; however, the allowable moment must be calculated about each of the axes. In this case, it is not necessary to rotate the moments into the principal axis because the principal and centroid axes coincide.

Material: Aluminum 7475T7351 Bare Plate (1.5-2.0 in), LT

F_{tu} = 71,000 psi F_{ty} = 60,000 psi
E= 10.3x10^6 psi e_o=0.080 in/in (use e_o=0.050)

Calculate material constants

$e_u = e_o + F_{tu} / E = 0.05 + 71000/10.3x10^6 = 0.0569$ *in/in*

$e_{p_{tu}} = e_u - F_{tu}/E = 0.0569 - 71000/10.3x10^6 = 0.0500$ *in/in*

$n_t = \log(e_{p_{tu}}/0.002)/\log(F_{tu}/F_{ty})$

$= \log(0.0500/0.002)/\log(71000/60000) = 19.12$

Sketch

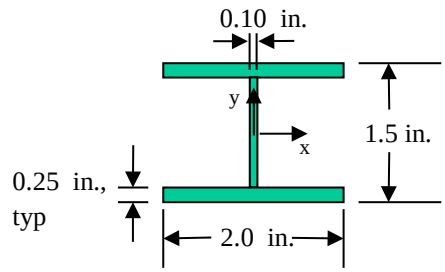

Geometry: $I_{x'}$ = 0.4042 in^4 ybar= 0.75 in $Q_{x'}$ = 0.325 in^3

$I_{y'}$ = 0.3334 in^4 xbar= 1.0 in $Q_{y'}$ = 0.251 in^3
A= 1.1 in^2

Calculate f_o

$$f_o = \frac{6F_{tu}}{e_u^2}\left[\frac{F_{tu}^2}{3E^2} + \left(\frac{e_{ptu}F_{tu}}{E}\right)\frac{(n_t+1)}{(n_t+2)} + \frac{n_t e_{ptu}^2}{(2n_t+1)}\right] - 2F_{tu}$$

$$f_o = \frac{6 \bullet 71000}{0.0569^2}\left[\frac{71000^2}{3 \bullet 10{,}300{,}000^2} + \left(\frac{0.0500 \bullet 71000}{10{,}300{,}000}\right)\frac{(19.12+1)}{(19.12+2)} + \frac{19.12 \bullet 0.0500^2}{(2 \bullet 19.12+1)}\right] - 2 \bullet 71000 = 63{,}569\, psi$$

Determination of $M_{allow\text{-}x'}$ Allowable Resisting Moment about x principal axis			**Determination of $M_{allow\text{-}y'}$** Allowable Resisting Moment about y principal axis		
Solution Step	**Calculation**	**Result**	**Solution Step**	**Calculation**	**Result**
Calculate $k_{x'}$	$k_{x'} = 2Q_{x'}/(I_{x'}/c_{y'})$ = 2(0.325) / (0.4042/0.75)	$k_{x'}$= 1.206	Calculate k_y	$k_{y'} = 2Q_{y'}/(I_{y'}/c_{x'})$ = 2(0.251) / (0.3334/1.0)	$k_{y'}$= 1.506
Calculate $(mc/I)_{bx'}$	$(mc/I)_{bx'} = f + f_o (k_{x'}-1)$ = 71000 + 63569(1.206-1)	$(mc/I)_{bx'}$ = 84095 psi	Calculate $(mc/I)_{by'}$	$(mc/I)_{by'} = f + f_o (k_{y'}-1)$ = 71000 + 63569(1.506-1)	$(mc/I)_{by'}$ = 103166 psi
Calculate $M_{allow\text{-}x'}$	$M_{allow\text{-}x'} = (mc/I)_{bx'} (I_x/c_{y'})$ = 84095(0.4042/0.75)	$M_{allow\text{-}x'}$ = 45322 in-lb	Calculate $M_{allow\text{-}y'}$	$M_{allow\text{-}y'} = (mc/I)_{by'} (I_{y'}/c_{x'})$ = 103166(0.3334/1.0)	$M_{allow\text{-}y'}$ = 34396 in-lb
Calculate $R_{bx'}$	$R_{bx'} = m_{x'}/ M_{allow\text{-}x'}$ = 20000/45322	$R_{bx'}$ = 0.441	Calculate $R_{by'}$	$R_{by'} = m_{y'}/ M_{allow\text{-}y'}$ = 10000/34396	$R_{by'}$ = 0.291
$R_b = R_{bx'} + R_{by'}$ = 0.441 + 0.291 = 0.732					
M.S. (plastic) = $1/R_b - 1$ = 1/(0.732) –1 = 0.37					

Copyright 2016 Lockheed Martin Corporation.
Note: The current version is always the version on the Lockheed Martin network.

6.3.8.7 Example 7 – Combined Bending + Axial Tension of a Symmetric Section

Given: I-section of dimensions shown, used in example problems 1, 2, and 5, with an added axial tension load. Determine the M.S. for bending moment of 20000 in-lb applied about the x axis and 10000 in-lb applied about the y axis with an axial tension load at the centroid of 20000 lbs.

This problem has added complexity in terms of the interaction of the axial and bending loads. In this case, it is not necessary to rotate the moments into the principal axis because the principal and centroid axes coincide.

Material: Aluminum 7475T7351 Bare Plate (1.5-2.0 in), LT

F_{tu} = 71,000 psi F_{ty} = 60,000 psi

E= 10.3x10^6 psi e_o=0.080 in/in (use e_o=0.050)

Calculate material constants

$e_u = e_o + F_{tu} / E = 0.05 + 71000/10.3x10^6 = 0.0569$ *in/in*

$e_{p_{tu}} = e_u - F_{tu}/E = 0.0569-71000/10.3x10^6 = 0.0500$ *in/in*

$n_t = \log(e_{p_{tu}}/0.002)/\log(F_{tu}/F_{ty})$

$= \log(0.0500/0.002)/\log(71000/60000) = 19.12$

Sketch

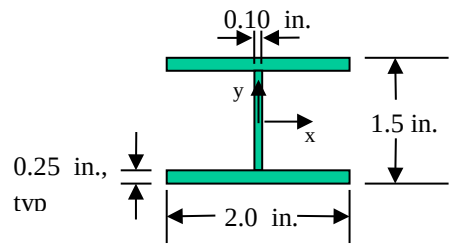

Geometry: I_x = 0.4042 in^4 ybar= 0.75 in Q_x = 0.325 in^3
I_y = 0.3334 in^4 xbar= 1.0 in Q_y = 0.251 in^3
A= 1.1 in^2

$$f_o = \frac{6F_{tu}}{e_u^{\,2}}\left[\frac{F_{tu}^{\,2}}{3E^2} + \left(\frac{e_{ptu}F_{tu}}{E}\right)\frac{(n_t+1)}{(n_t+2)} + \frac{n_t e_{ptu}^2}{(2n_t+1)}\right] - 2F_{tu}$$

$$f_o = \frac{6 \bullet 71000}{0.0569^2}\left[\frac{71000^2}{3 \bullet 10{,}300{,}000^2} + \left(\frac{0.0500 \bullet 71000}{10{,}300{,}000}\right)\frac{(19.12+1)}{(19.12+2)} + \frac{19.12 \bullet 0.0500^2}{(2 \bullet 19.12+1)}\right] - 2 \bullet 71000 = 63{,}569\,psi$$

Calculate the material plasticity factor

$\gamma = (mc/I)_{b,k=2.0}/F_{tu} - 1 = (71000 + 63569(2-1))/71000 - 1 = 0.90$

Determination of $M_{allow\text{-}x'}$ Allowable Resisting Moment about x principal axis			**Determination of $M_{allow\text{-}y'}$** Allowable Resisting Moment about y principal axis		
Step	**Calculation**	**Result**	**Step**	**Calculation**	**Result**
Calculate $k_{x'}$	$k_{x'} = 2Q_{x'}/(I_{x'}/c_{y'}) = 2(0.325)/(0.4042/0.75)$	$k_{x'} = 1.206$	Calculate $k_{y'}$	$k_{y'} = 2Q_{y'}/(I_{y'}/c_{x'}) = 2(0.251)/(0.3334/1.0)$	$k_{y'} = 1.506$
Calculate $(mc/I)_{bx'}$	$(mc/I)_{bx'} = f + f_o(k_{x'}-1) = 71000 + 63569(1.206-1)$	$(mc/I)_{bx'}$ = *84095 psi*	Calculate $(mc/I)_{by'}$	$(mc/I)_{by'} = f + f_o(k_{y'}-1) = 71000 + 63569(1.506-1)$	$(mc/I)_{by'}$ = *103166 psi*
Calculate $M_{allow\text{-}x'}$	$M_{allow\text{-}x'} = (mc/I)_{bx'}(I_{x'}/c_y) = 84095(0.4042/0.75)$	$M_{allow\text{-}x'}$ = *45322* in-lb	Calculate $M_{allow\text{-}y'}$	$M_{allow\text{-}y'} = (mc/I)_{by'}(I_{y'}/c_{x'}) = 103166(0.3334/1.0)$	$M_{allow\text{-}y'}$ = *34396 in-lb*
Calculate $R_{bx'}$	$R_{bx'} = m_{x'\text{-}appl}/M_{allow\text{-}x'} = 20000/45322$	$R_{bx'} = 0.441$	Calculate $R_{by'}$	$R_{by'} = m_{y'\text{-}appl}/M_{allow\text{-}y'} = 10000/34396$	$R_{by'} = 0.291$
Calculate $K_{geom\text{-}x'}$	$K_{geom\text{-}x'} = Ac_{y'}/2Q_{x'} = 1.1(0.75)/(2 \bullet 0.325)$	$K_{geom\text{-}x'} = 1.27$	Calculate $K_{geom\text{-}y'}$	$K_{geom\text{-}y'} = Ac_{x'}/2Q_{y'} = 1.1(1.0)/(2 \bullet 0.269)$	$K_{geom\text{-}y'} = 2.19$
Determine Interaction Exponent, r	$K_{geom\text{-}x'}$ =1.27; γ = 0.90	$r_{x'} = 1.22$	Determine Interaction Exponent, r	$K_{geom\text{-}y'}$ =2.19; γ = 0.90	$r_{y'} = 1.94$

$R_b = R_{bx'} + R_{by'} = 0.441 + 0.291 = 0.732$

$R_t = P/AF_{tu} = 20000/(1.1 \bullet 71000) = 0.256$

$r_{combined} = (r_x R_{bx'} + r_y R_{by'}) / R_b = (1.22 \bullet 0.441 + 1.94 \bullet 0.291)/0.732 = 1.51$

From Figure 6.3.6-2 $R_{b\text{-}allow} = 0.837$ or $R_{t\text{-}allow} = 0.293$

M.S. (ultimate bending interaction) = $R_{b\text{-}allow}/R_b - 1 = 0.837/0.732 - 1 = R_{t\text{-}allow}/R_t - 1 = 0.293/0.256 - 1 = \underline{0.14}$

Copyright 2016 Lockheed Martin Corporation.
Note: The current version is always the version on the Lockheed Martin network.

6.3.8.8 Example 8 – Combined Bending + Axial Compression of A Symmetric Section

Given: An I-section of dimensions shown, used in example problems 1, 2, and 5-7 and with an added axial compression load instead of an axial tension load. Determine the M.S. for bending moment of 20000 in-lb applied about the x axis and 10000 in-lb applied about the y axis (both moments include secondary beam column effects) with an axial compression load of 15000 lbs on a column where the slenderness ratio, L'/ρ, is 20 and F_c = 57000 psi. Crippling is not critical.

This problem has added complexity in terms of the interaction of the axial and bending loads. In this case, the bending loads must have accounted for any secondary effects of deflections due to the compression axial load. In this case, it is not necessary to rotate the moments into the principal axis because the principal and centroid axes coincide.

Material: Aluminum 7475T7351 Bare Plate (1.5-2.0 in), LT

F_{tu} = 71,000 psi F_{ty} = 60,000 psi

E= 10.3x10^6 psi e_o=0.080 in/in (use e_o=0.050)

Fc = 57000 psi

Calculate material constants

$e_u = e_o + F_{tu} / E$ = *0.05+71000/10.3x10^6 = 0.0569 in/in*

$e_{p_{tu}} = e_u - F_{tu}/E$ *=0.0569-71000/10.3x10^6=0.0500 in/in*

$n_t = \log(e_{p_{tu}}/0.002)/\log(F_{tu}/F_{ty})$

= log(0.0500/0.002)/log(71000/60000) = 19.12

Sketch

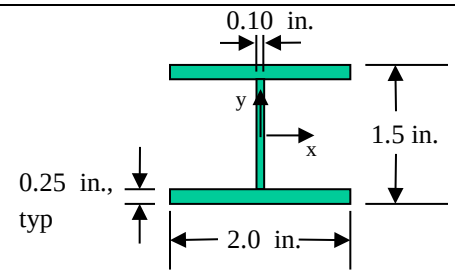

Geometry: $I_{x'}$ = 0.4042 in^4 ybar= 0.75 in $Q_{x'}$ = 0.325 in^3
$I_{y'}$ = 0.3334 in^4 xbar= 1.0 in $Q_{y'}$ = 0.251 in^3
A= 1.1 in^2

Calculate f_o

$$f_o = \frac{6F_{tu}}{e_u^2}\left[\frac{F_{tu}^2}{3E^2} + \left(\frac{e_{ptu}F_{tu}}{E}\right)\frac{(n_t+1)}{(n_t+2)} + \frac{n_t e_{ptu}^2}{(2n_t+1)}\right] - 2F_{tu}$$

$$f_o = \frac{6 \bullet 71000}{0.0569^2}\left[\frac{71000^2}{3 \bullet 10{,}300{,}000^2} + \left(\frac{0.0500 \bullet 71000}{10{,}300{,}000}\right)\frac{(19.12+1)}{(19.12+2)} + \frac{19.12 \bullet 0.0500^2}{(2 \bullet 19.12+1)}\right] - 2 \bullet 71000 = 63{,}569\, psi$$

Determination of $M_{allow\text{-}x'}$ Allowable Resisting Moment about x principal axis			**Determination of $M_{allow\text{-}y'}$** Allowable Resisting Moment about y principal axis		
Solution Step	**Calculation**	**Result**	**Solution Step**	**Calculation**	**Result**
Calculate $k_{x'}$	$k_{x'}=2Q_{x'}/(I_{x'}/c_{y'})$ = *2(0.325) / (0.4042/0.75)*	$k_{x'}$= *1.206*	Calculate $k_{y'}$	$k_{y'} = 2Q_{y'}/(I_{y'}/c_{x'})$ = *2(0.251) / (0.3334/1.0)*	$k_{y'}$= *1.506*
Calculate $(mc/I)_{bx'}$	$(mc/I)_{bx'} = f + f_o (k_{x'}-1)$ = *71000 + 63569(1.206-1)*	$(mc/I)_{bx'}$ = *84095 psi*	Calculate $(mc/I)_{by'}$	$(mc/I)_{by'} = f + f_o (k_{y'}-1)$ = 71000 + 63569(1.506-1)	$(mc/I)_{by'}$ = *103166 psi*
Calculate $M_{allow\text{-}x'}$	$M_{allow\text{-}x'} = (mc/I)_{bx'} (I_{x'}/c_{y'})$ = *84095(0.4042/0.75)*	$M_{allow\text{-}x'}$ = *45322* in-lb	Calculate $M_{allow\text{-}y'}$	$M_{allow\text{-}y'} = (mc/I)_{by'}(I_{y'}/c_{x'})$ = *103166(0.3334/1.0)*	$M_{allow\text{-}y'}$ = *34396 in-lb*
Calculate $R_{bx'}$	$R_{bx'} = m_{x'\text{-}appl}/ M_{allow\text{-}x'}$ = *20000/45322*	$R_{bx'}$ = *0.441*	Calculate $R_{by'}$	$R_{by'} = m_{y'\text{-}appl}/ M_{allow\text{-}y'}$ = *10000/34396*	$R_{by'}$ = *0.291*
$R_b = R_{bx'} + R_{by'}$ = *0.441 + 0.291 = 0.732*					
$R_c = (P/A) / Fc$ = *(15000/1.1)/57000 = 0.239*					
M.S. (bending interaction) =*1/(R_b + R_c)-1 = 1/(.732 + .239) – 1 =* ***+0.03***					

Copyright 2016 Lockheed Martin Corporation.
Note: The current version is always the version on the Lockheed Martin network.

6.3.8.9 Example 9 Combined Bending + Shear of a Symmetric Section

Determine the M.S. for bending moment of 40000 in-lb applied about the x axis of the beam shown and a 4000 lb applied shear along the Y axis.

Material

Aluminum 7475T7351 Bare Plate (1.5-2.0 in), LT

F_{tu} = 71,000 psi F_{ty} = 60,000 psi

E= 10.3x10^6 psi e_o=0.080 in/in (use e_o=0.050)

n=15 F_{su} = 43000 psi

Calculate material constants

$e_u = e_o + F_{tu}/E = 0.05 + 71000/10.3x10^6 = 0.0569$ in/in

$e_{ptu} = e_u - F_{tu}/E = 0.0569 - 71000/10.3x10^6 = 0.050$ in/in

$n_t = \log(e_{ptu}/0.002)/\log(F_{tu}/F_{ty})$

$= \log(0.0500/0.002)/\log(71000/60000) = 19.122$

$F_{tp} = F_{ty}(0.05)^{(1/n)} = 60000(0.05)^{(1/19.122)} = 51300$ psi

Sketch

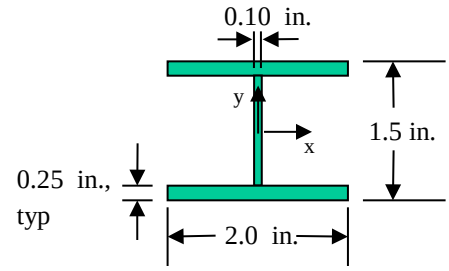

Calculate f_o

$$f_o = \frac{6F_{tu}}{e_u^2}\left[\frac{F_{tu}^2}{3E^2} + \left(\frac{e_{ptu}F_{tu}}{E}\right)\frac{(n_t+1)}{(n_t+2)} + \frac{n_t e_{ptu}^2}{(2n_t+1)}\right] - 2F_{tu}$$

$$f_o = \frac{6 \bullet 71000}{0.0569^2}\left[\frac{71000^2}{3 \bullet 10{,}300{,}000^2} + \left(\frac{0.0500 \bullet 71000}{10{,}300{,}000}\right)\frac{(19.12+1)}{(19.12+2)} + \frac{19.12 \bullet 0.0500^2}{(2 \bullet 19.12+1)}\right] - 2 \bullet 71000 = 63{,}569\, psi$$

Calculate the margin of safety using the Maximum Bending – Maximum Shear approach of Section 6.3.6.3.1

Calculate the allowable moment and bending stress ratio, R_b

Solution Step	Calculation	Result
Determine I_x for section	I = *1/12[2•1.5^3-{(2-.10)(1.5-2•0.25)^3}]*	I=*0.4042 in^4*
Determine ybar for section	*By inspection*	*ybar=0.75 = c*
Determine A for section	*A=2•0.25•2+0.10(1.5-2•0.25)*	A=*1.1 in^2*
Determine Q for area above N.A.	*Q = ΣAy$_i$ = 2•0.25(0.75-0.25/2)+(0.75-.25)•0.10•0.50/2*	Q=*0.325 in^3*
Determine k	k=2Q/(I/c) = *2•0.325/(0.4042/0.75)*	k=*1.206*
Determine $(mc/I)_b$	$(mc/I)_b = f + f_o(k-1)$ = *71000 +63569(1.206-1)*	$(mc/I)_b$ = *84095 psi*
Determine M_{allow}	$M_{allow} = (mc/I)_b(I/c)$ = *84095(0.4042/0.75)*	M_{allow} = *45322 in-lb*
Calculate R_b	R_b = 40000/45322	R_b = 0.883

Calculate Shear Peaking factor, shear stress and shear stress ratio, R_s

Solution Step	Calculation	Result
Calculate k_{inv}	$k_{inv}=c/(y_1 \bullet k)$ = 0.75/(0.59091•1.206)	k_{inv}=1.052
Calculate f	f=mc/I = 40000•0.75/0.4042	f = 74221 psi
Calculate k_{plas}	$k_{plas} = (f-Ftp)/[(mc/I)_{b\text{-}ult}-F_{tp}]$= [74221 – 51300] / [84095 – 51300]	k_{plas}=0.699
Calculate C_{shear}	$C_{shear} = 1+k_{plas}(k_{inv}-1)$ = 1+0.699(1.052-1)	C_{shear} = 1.036
Calculate f_s maximum	$f_s = C_{shear}\left(\frac{VQ}{It_1}\right) = 1.036\left(\frac{4000 \bullet 0.325}{0.4042 \bullet 0.10}\right)$	f_s-max = 33320 psi
Calculate R_s	R_s = 33320/43000	R_s = 0.775
R_b (from above)		R_b = 0.883

Calculate Estimated Combined Margin of Safety – Maximum Bending- Maximum Shear Approach

Calculate estimate Margin	$MS_{est} = 1/(0.775^2+0.883^2)^{0.5}-1$	**MS_{est} = -0.15**

Copyright 2016 Lockheed Martin Corporation.
Note: The current version is always the version on the Lockheed Martin network.

Recalculate the margin of safety using the True Stress approach of Section 6.3.6.3.2		
Determine the bending stress at the appropriate location. First the stress must be determined at the extreme fiber for the applied moment		
Guess an Extreme Fiber Stress		f=65000 psi
Calculate Strain	$e=f/E+e_{ptu}(f/F_{tu})^{nt}=$ 65000/10,300,000+0.050(65000/71000)$^{19.122}$	e=0.01555 in/in
Calculate plastic strain, e_p	$e_p=e-f/E$ = 0.01555-65000/10,300,000	e_p = 0.00924 in/in
Calculate f_o		
$$f_o=\frac{6f}{e^2}\left[\frac{f^2}{3E^2}+\left(\frac{e_p f}{E}\right)\frac{(n_t+1)}{(n_t+2)}+\frac{n_t e_p^2}{(2n_t+1)}\right]-2f$$ $$f_o=\frac{6\bullet 65000}{0.01555^2}\left[\frac{65000^2}{3\bullet 10{,}300{,}000^2}+\left(\frac{0.00924\bullet 65000}{10{,}300{,}000}\right)\frac{(19.122+1)}{(19.122+2)}+\frac{19.122\bullet 0.00924^2}{(2\bullet 19.122+1)}\right]-2\bullet 65000=48105\,psi$$		
Calculate $(mc/I)_b$	$(mc/I)_b = f + f_o(k-1)$ = 65000+48105(1.206-1)	$(mc/I)_b$ = 74910 psi
Calculate $m_{appl\text{-}calc}$	$m_{appl\text{-}calc}=(mc/I)_b(I/c)$ = 74910(0.4042/0.75)	$m_{appl\text{-}calc}$= 40371 in-lb
Is m_{appl} = $m_{appl\text{-}calc}$? 40000 < 40371 : Reduces f_{guess} and recalculate After several iterations, final fiber stress is determined to be 64622 psi		
Guess an Extreme Fiber Stress		f=64622 psi
Calculate Strain	$e=f/E+e_{p_{tu}}(f/F_{tu})^{n_t}=$ 64622/10,300,000+0.050(6462/71000)$^{19.122}$	e=0.01454 in/in
Calculate plastic strain, e_p	$e_p=e-f/E$ = 0.01454-64622/10,300,000	e_p = 0.00827 in/in

$$f_o=\frac{6f}{e^2}\left[\frac{f^2}{3E^2}+\left(\frac{e_p f}{E}\right)\frac{(n_t+1)}{(n_t+2)}+\frac{n_t e_p^2}{(2n_t+1)}\right]-2f$$ $$f_o=\frac{6\bullet 64622}{0.01454^2}\left[\frac{64622^2}{3\bullet 10{,}300{,}000^2}+\left(\frac{0.00827\bullet 64622}{10{,}300{,}000}\right)\frac{(19.122+1)}{(19.122+2)}+\frac{19.122\bullet 0.00827^2}{(2\bullet 19.122+1)}\right]-2\bullet 64622=46593\,psi$$		
Calculate $(mc/I)_b$	$(mc/I)_b = f + f_o(k-1)$ = 64622+46593(1.206-1)	$(mc/I)_b$ = 74220 psi
Calculate $m_{appl\text{-}calc}$	$m_{appl\text{-}calc}=(mc/I)_b(I/c)$ = 74220(0.4042/0.75)	$m_{appl\text{-}calc}$= 40000 in-lb
Is m_{appl} = $m_{appl\text{-}calc}$ within desired error? 40000 = 40000 Iteration complete So the extreme fiber stress for the applied moment of 40000 in-lb is 74220 psi		
Iterate to Determine Fiber Stress for Applied Moment at web/cap interface per Table 6.3.2-3		
Calculate strain at web cap interface	$e=e_{fiber}(y_i/c)$ = 0.01454(0.50/0.75)	e=0.00969
Guess a Stress at cap/web interface		f_{guess}=61945 psi
Calculate Strain	$e=f/E+e_{p_{tu}}(f/F_{tu})^{n_t}=$ 61945/10,300,000+0.050(61945/71000)$^{19.122}$	e_{calc}=0.00969 in/in
Is e_{calc} = e? 0.00969 = 0.00969, Iteration complete		
Calculate R_b flange	R_b = 61945 / 71000	R_b=0.872
Calculate Shear Stress at Web/Cap Interface		
Calculate k_{inv}	$k_{inv}=c/(y_1\bullet k)$ = 0.75/(0.625•1.206) = 0.995 => 1.0	k_{inv}=1.0
Calculate k_{plas}	Since k_{inv} is 1, C_{shear} will be 1.0 and there is no need to calculate k_{plas}.	C_{shear} = 1.0
Calculate f_s flange	$f_s=C_{shear}\left(\frac{VQ}{It_1}\right)=1.0\left[\frac{4000(2\bullet 0.25\bullet 0.625)}{0.4042\bullet 0.10}\right]$	$f_{s\text{-}max}$ = 30925 psi
Calculate R_s flange	R_s = 30925/43000	R_s = 0.719
Calculate MS -flange	MS = 1/ $(R_b^2 + R_s^2)^{(1/2)}$ -1 = 1/$(0.872^2 + 0.719^2)^{1/2}$-1	**M.S.$_{est}$ = -0.12**

Copyright 2016 Lockheed Martin Corporation.
Note: The current version is always the version on the Lockheed Martin network.

In this case the estimate margin based on true stress at the flange/web interface is only slightly less than the margin calculated from the maximum shear / maximum bending interaction. To obtain true margins, iterate by reducing both applied loads in the same amount, which, in turn requires recalculating the stress at the outer fiber and the cap/web interface. Only the iteration for the true stresses will be shown as it is the more complex.

Iterate to Determine Extreme Fiber Stress for k_{rdc}(Applied Moment) per Table 6.3.2-3		
The step shown is the final step of the iteration process		
Select a value for k_{rdc} and calculate applied moment	k_{rdc}=0.89 m=0.89(40000) = 35600	m_{appl}=35600 in lbs
Guess an Extreme Fiber Stress	*Step shown is final step of iterative process*	f=60638 psi
Calculate Strain	$e=f/E+e_{p_{tu}}(f/F_{tu})^{n_t}=$ 60638/10,300,000+0.050(60638/71000)$^{19.122}$	e=0.00834 in/in
Calculate plastic strain, e_p	$e_p=e-f/E$ = 0.00834-60638/10,300,000	e_p = 0.00245 in/in
Calculate f_o		f_o=26328 psi
$$f_o=\frac{6f}{e^2}\left[\frac{f^2}{3E^2}+\left(\frac{e_p f}{E}\right)\frac{(n_t+1)}{(n_t+2)}+\frac{n_t e_p^2}{(2n_t+1)}\right]-2f$$ $$f_o=\frac{6\bullet 60638}{0.00245^2}\left[\frac{64638^2}{3\bullet 10{,}300{,}000^2}+\left(\frac{0.00834\bullet 60638}{10{,}300{,}000}\right)\frac{(19.122+1)}{(19.122+2)}+\frac{19.122\bullet 0.00834^2}{(2\bullet 19.122+1)}\right]-2\bullet 60638=26328\,psi$$		
Calculate $(mc/I)_b$	$(mc/I)_b = f + f_o(k-1)$ = 60638+26328(1.206-1)	$(mc/I)_b$ = 66062 psi
Calculate $m_{appl\text{-}calc}$	$m_{appl\text{-}calc}=(mc/I)_b(I/c) = 66062(0.4042/0.75)$	$m_{appl\text{-}calc}$= 35603 in-lb
Is mappl = mappl-calc within desired error? 35600 = 35603 : yes		

Iterate to Determine Fiber Stress for Applied Moment at web/cap interface per Table 6.3.2-3		
Calculate strain at web cap interface	$e=e_{fiber}(yi/c)$ = 0.00834(0.50/0.75)	e=0.00556
Guess a Stress at cap/web interface	*[Again, step shown is final step of iterative process]*	f_{guess}=54240 psi
Calculate Strain	$e=f/E+e_{p_{tu}}(f/F_{tu})^{n_t}=$ 54240/10,300,000+0.050(54240/71000)$^{19.12}$	e_{calc}=0.00556 in/in
Is e_{calc} = e? 0.00556 = 0.00556		
Calculate R_b flange	R_b = 54240 / 71000	R_b=0.764
Calculate Shear Stress at Web/Cap Interface		
Calculate k_{inv}	$k_{inv}=c/(y_1\bullet k)$ = 0.75/(0.625•1.206) = 0.995 => 1.0	k_{inv}=1.0
Calculate k_{plas}	Since k_{inv} is 1, C_{shear} will be 1.0 and there is no need to calculate k_{plas}.	C_{shear} = 1.0
Calculate f_s flange	$f_s=k_{rdc}C_{shear}\left(\frac{VQ}{It_1}\right)=0.89\bullet 1.0\left[\frac{4000(2\bullet 0.25\bullet 0.625)}{0.4042\bullet 0.10}\right]$	$f_{s\text{-}max}$ = 27524 psi
Calculate R_s flange	R_s= 27524/43000	R_s = 0.640
Calculate MS -flange	MS = 1/ $(R_b^2 + R_s^2)^{(1/2)}$ -1 = 1/$(0.764^2 + 0.640^2)^{1/2}$-1	$M.S._{est}$ = 0.003
So by reducing the applied loads by a factor of 0.89, a 0.0 margin is obtained. The real margin of the section, based on true stresses at the web/cap intersection may be calculated from		
Calculate M.S	M.S.=k_{rdc}-1 = 0.89-1.0	M.S. = -0.11

This example illustrates that the estimated margin gives a reasonably good representation of the margin. Calculating both the margin based on maximum stresses and the margin based on true stresses at the web/cap interface shows that for this type of cross section, the maximum stress approach is not overly conservative. For other sections, it might provide some conservatism.

Copyright 2016 Lockheed Martin Corporation.
Note: The current version is always the version on the Lockheed Martin network.

6.3.8.10 Example 10 – Combined Bending of an Unsymmetrical section with Neutral Axis Shift + Shear

Given: The Tee Section with neutral axis shift from Section 6.3.8.4
Determine the M.S. for bending moment of 5000 in-lb applied about the x axis and a shear load of 2000 lbs applied parallel to the y axis. Calculate $(mc/I)_b$ about the plastic neutral axis. The problem will be solved using the maximum bending moment/maximum shear approach.

From Example 3 Section 6.3.8.4:
F_{tu} = 71000 psi; F_{ty} = 60000 psi
E = 10.3x10^6 psi; e_o=0.080 in/in
e_u =0.0568932 in/in
$e_{p_{tu}}$ = 0.0050 in/in; n_t = 19.12
$F_{tp} = 60000(0.05)^{(1/19.12)} = 51299$

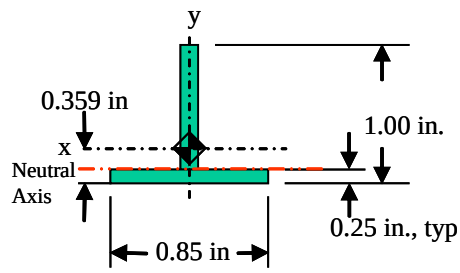

Section with Shifted Neutral Axis
I_x = 0.034798 in^4 A=0.400 in c_1 = 0.359
$I_{NA} = 0.034798+0.400(0.359-0.25)^2 = 0.03955$ in^4

Subsection 1 Tension Side

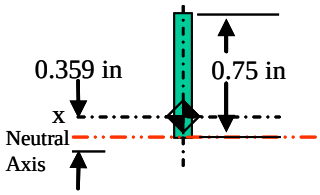

I_{na} = 0.00878 in^4 ybar=0.375 in A=0.1875 in^2

Subsection 2 Compression Side

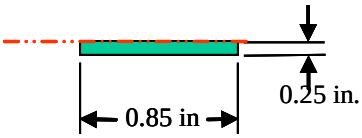

I_{na} = 0.001107 in^4 ybar=0.125 in A=0.2125 in^2

Solution Step	Calculation	Result	Solution Step	Calculation	Result
Calculate I_x for section about NA	$I_{NA1} = I_o + Ad^2$ $= 0.00878 + 0.1875(0.375)^2$	$I_{xx1} = 0.035156$ in^4	Calculate I_x for section about NA	$I_{NA2} = I_o + Ad^2$ $= 0.001107 + 0.2125(0.125)^2$	$I_{xx} = 0.00443$ in^4
Calculate c	neutral axis of whole section to extreme fiber Subsection 1	$c_{larger} = 0.75$ in	Calculate c	neutral axis of whole section to extreme fiber Subsection 2	$c_{smaller} = 0.25$ in
Calculate Q	$Q_1 = \Sigma Ay_i = 0.25(0.75)(0.375)$	$Q_1 = 0.0703125$ in^3	Calculate Q	$Q_2 = \Sigma Ay_i = 0.85(0.25)(0.125)$	$Q_2 = 0.02656$ in^3
Calculate k	$k = Q_1/(I_{NA1}/c_{larger}) = 0.0703125/(0.035156/0.75)$	$k_1 = 1.50$	Calculate k	$k = Q_2/(I_{NA2}/c_{smaller}) = 0.02656/(0.00443/0.25)$	$k_2 = 1.50$

Begin Shear Calculation		
Calculate k_{inv}	$k_{inv\text{-}top} = I/[A_{sub}y_{sub}(y_1+y_2)] = 0.03955/[(0.75 \cdot 0.25)(0.375)(0.375+0.125)]$ $k_{inv\text{-}bottom} = I/[A_{sub}y_{sub}(y_1+y_2)] = 0.03955/[(0.85 \cdot 0.25)(0.125)(0.375+0.125)]$	$k_{inv\text{-}top} = 1.125$ $k_{inv\text{-}bottom} = 2.978$
Calculate R_b	$R_b = m/M_{all} = 5000/6443 = 0.776$	$R_b = 0.776$

Copyright 2016 Lockheed Martin Corporation.
Note: The current version is always the version on the Lockheed Martin network.

Calculate maximum applied stress	5000(0.75)/0.03955 = 94817 psi	$f_{b\text{-larger-c}}$ = 94817 psi
Calculate $R_{b\text{-tp}}$	$R_{b\text{-tp}}$ = 0.776(51299)/94817 = 0.42	$R_{b\text{-tp}}$ = 0.42
Calculate k_{plas}	$k_{plas} = R_b - R_{b\text{-tp}} / (1-R_{b\text{-tp}})$ = (0.776 – 0.42) / (1-0.42)	k_{plas} = 0.613
Calculate C_{shear}	$C_{shear} = 1+k_{plas}(k_{inv}-1)$ = 1+0.613(1.125-1) (larger) C_{shear} = 1.0+0.613(2.978-1) (smaller)	C_{shear} = 1.08 (larger) C_{shear} = 2.21 (smaller)
Calculate f_s maximum	Calculate $f_{s\text{-max}}$ using the CG location not the NA location $f_{s-larger-c} = C_{shear}\left(\frac{VQ}{It_1}\right) = 1.08\left[\frac{2000\left(0.641 \bullet 0.25 \bullet \frac{0.641}{2}\right)}{0.0348 \bullet 0.25}\right]$ $f_{s-smaller-c} = C_{shear}\left(\frac{VQ}{It_1}\right) = 2.21\left[\frac{2000\left[0.85 \bullet 0.25\left(0.109+\frac{0.25}{2}\right)+0.109 \bullet 0.25\left(\frac{0.109}{2}\right)\right]}{0.0348 \bullet 0.25}\right]$	$f_{s\text{-larger-c}}$ = 12571 psi $f_{s\text{-smaller-c}}$ = 26017 psi Use larger
Calculate R_s	$R_s = f_s/F_{su}$= 26017/43000	R_s = 0.605
Calculate MS_{est}	$MS_{est} = 1/(Rs^2+Rb^2)^{0.5}-1 = 1/(0.605^2 + 0.776^2)^{0.5} - 1$	MS_{est} = 0.016

Iterate to obtain true margin	
Try k_{rdc}=1.02	m=1.02•5000 = 5100 in-lb; V=1.02•2000 = 2040 lb
Calculate new f_b = mc/I	f_b = 5100•0.75/0.03955 = 96713 psi
Calculate new $R_b = m/M_{all}$	R_b=5100/6443 = 0.7916
Calculate new $R_{b\text{-tp}} = R_b*F_{tp}/f_b$	$R_{b\text{-tp}}$=0.7916•51299/96713 = 0.42
Calculate new $k_{plas} = (R_b-R_{b\text{-tp}}) / (1 - R_{b\text{-tp}})$	k_{plas} = (0.7916-0.42)/(1-0.42) = 0.641
Calculate $C_{shear} = 1+k_{plas}*(k_{inv}-1)$	Cshear = 1+0.641(2.978-1) = 2.268
Calculate $f_{s-max} = C_{shear}\left(\frac{VQ}{It_1}\right)$	$f_{s-max} = 2.268\left[\frac{2000\left[0.85 \bullet 0.25\left(0.109+\frac{0.25}{2}\right)+0.109 \bullet 0.25\left(\frac{0.109}{2}\right)\right]}{0.0348 \bullet 0.25}\right] = 26700$
Calculate R_s	R_s = 26700/43000 = 0.62
Calculate R_b	R_b = 5100 / 6443 = 0.79
Calculate MS	$MS_{est} = 1/(Rs^2+Rb^2)^{0.5}-1 = 1/(0.62^2 + 0.79^2)^{0.5} - 1$ =0.00
By increasing the loads by a factor of 1.2 the margin goes to zero, so the true margin is	
Calculate true margin	MS = 1.02(5000/5000)-1 = 0.02

Copyright 2016 Lockheed Martin Corporation.
Note: The current version is always the version on the Lockheed Martin network.

6.4 Lateral Stability of Beams in Elastic Bending

When the lateral rigidity of beams in bending is small in comparison to the flexural rigidity in the plane of bending, the beam can become unstable in the lateral direction with sideways buckling. This occurs in a beam which is narrow in comparison to its height. The theory for lateral buckling or lateral stability is developed in Reference 6-24 for rectangular beams and symmetric I-sections. Reference 6-25 further examines rectangular beams while Reference 6-26 provides an analysis approach for special cases of single unsymmetrical I-sections, equal leg C- and Z-sections. Reference 6-27 provides further depth on Z-sections.

In general, the approach is to determine the critical buckling moment, M_{cr}, which is a function of the beam cross-sectional shape and geometry parameters. This is compared to the maximum moment due to the bending resulting from externally applied loads to calculate the margin of safety. The lateral stability of the beam is greatly affected by lateral restraints present along the beam. In the methods presented here there are two lateral support conditions: lateral support and lateral constraint. The term “lateral support” means the beam is supported laterally from translating out-of-plane, but has no rotational restraint. The term “lateral constraint” means the beam is supported laterally both translationally and rotationally. In Tables 6.4.1-1, 6.4.2-1, 6.4.3-1 and 6.4.3-2, the side view shows the typical beam diagram with loading and end conditions. This is used to determine the case most applicable to a particular beam bending problem. The top view illustrates the deformation of the beam laterally, if it is unstable, along with the type of lateral restraint present.

Lateral stability analysis **never** replaces basic column stability or beam strength checks. This is an analysis which is done in addition to these checks if the beam is narrow relative to its height. Lateral instability is also sometimes referred to as lateral-torsional instability since the torsional stiffness of the beam is used in the calculation is also different than torsional instability which is discussed in Section 8.5. Lateral instability develops in a beam in bending with either applied moments or applied transverse loading. Torsional instability develops in open section beams which are loaded in axial compression along their longitudinal axis and results in the column twisting or bending and twisting. A common solution to beams with lateral stability issues it to provide lateral restraint to the outstanding cap. This usually is done with straps or bracing. While preliminary analysis and sizing of bracing members can be performed using hand methods it is strongly recommended that a finite element model be used for final sizing.

6.4.1 Lateral Stability of Narrow Rectangular Beams

For narrow rectangular beams, lateral stability can significantly reduce the load carrying capability of the beam. Beam geometry is depicted in Figure 6.4.1-1. For rectangular sections, the lateral stability is a function of the bending stiffness about the weak axis and the torsional stiffness of the beam.

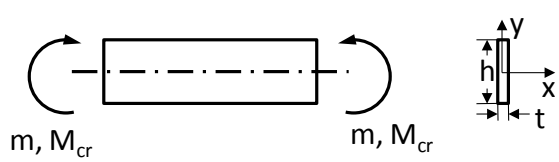

Figure 6.4.1-1 Narrow Rectangular Beam Geometry

The critical allowable elastic moment for lateral instability is calculated about the x axis (strong axis) of Figure 6.4.1-1 so it relates directly to the applied load and resulting bending moment.

Copyright 2016 Lockheed Martin Corporation.
Note: The current version is always the version on the Lockheed Martin network.

The allowable moment is given by

$$M_{cr} = \frac{K_L}{L}\sqrt{EI_yKG} \qquad \textbf{Equation 6.4.1-1}$$

where
L is the length of the beam (in)
K_L is the lateral stability constant given in Table 6.4.1-1 or Table 6.4.1-2
E is the material elastic modulus (psi)
I_y is the moment of inertia about the weak axis (y-axis of Figure 6.4.1-1) (in^4)
K is the St. Venant torsional constant (in^4). Refer to Section 4.2.2
G is the material shear modulus (psi)

Table 6.4.1-1 provides the lateral stability constants for beams of various restraint and loading scenarios. It also provides the parameter *n* which is used if the beam is not loaded at the centroidal axis. Refer to Equation 6.4.1-3 for its use.

Table 6.4.1-1 Lateral Stability Constants for Narrow Rectangular Beams with Load Applied at Centroidal Axis

Case	Side View	Top View	K_L	n
R-1	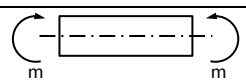 Applied Moment	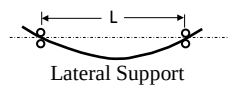 Lateral Support	3.14	--
R-2	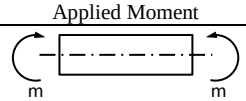 Applied Moment	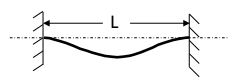 Lateral Constraint	6.28	--
R-3	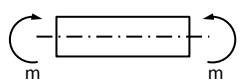 Applied Moment	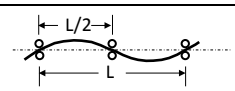 Lateral Support at Ends and Central Lateral Support	6.28	--
R-4	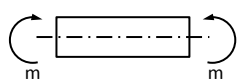 Applied Moment	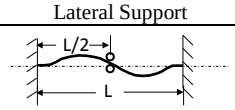 Lateral Constraint at Ends and Central Lateral Support	9.22	--
R-5	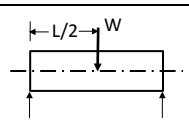 Simple-Simple	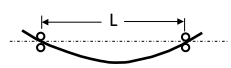 Lateral Support	4.235	1.42
R-6	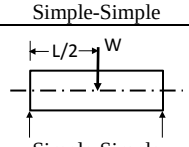 Simple-Simple	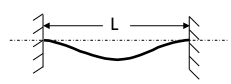 Lateral Constraint	6.47	1.42
R-7	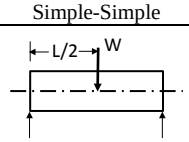 Simple-Simple	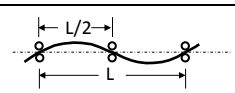 Lateral Support at Ends and Central Lateral Support	11.12	1.42
R-8	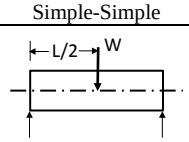 Simple-Simple	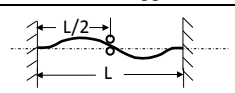 Lateral Constraint at Ends and Central Lateral Support	13.10	1.42

Copyright 2016 Lockheed Martin Corporation.
Note: The current version is always the version on the Lockheed Martin network.

Case	Side View	Top View	K_L	n
R-9	Simple- 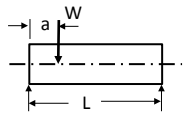 Simple	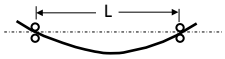 Lateral Support	Equation 6.4.1-2	1.42
R-10	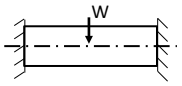 Fixed-Fixed	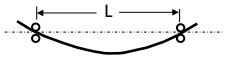 Lateral Support	5.29	--
R-11	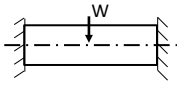 Fixed-Fixed	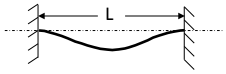 Lateral Constraint	5.88	--
R-12	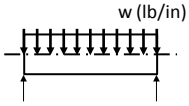 Simple-Simple	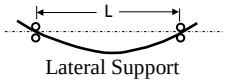 Lateral Support	3.54	1.26
R-13	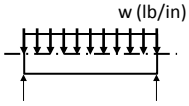 Simple-Simple	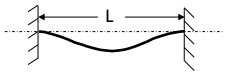 Lateral Constraint	6.10	1.26
R-14	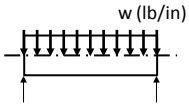 Simple-Simple	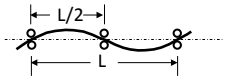 Lateral Support at Ends and Central Lateral Support	8.24	1.26
R-15	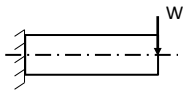 Cantilever	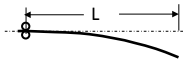 Lateral Support	4.01	0.815
R-16	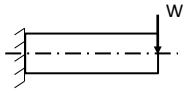 Cantilever	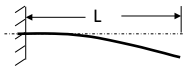 Lateral Constraint	4.01	0.815
R-17	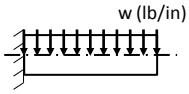 Cantilever	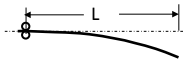 Lateral Support	6.43	0.725
R-18	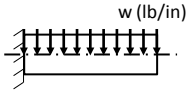 Cantilever	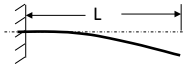 Lateral Constraint	6.43	0.725

If the load is not centrally located for a simply supported beam with lateral support as shown in Case R-9, K_L can be calculated from

$$K_L = -5.21\left(\frac{a}{L}\right)^3 + 10.62\left(\frac{a}{L}\right)^2 - 6.79\left(\frac{a}{L}\right) + 5.63 \qquad \textbf{Equation 6.4.1-2}$$

where
a is the distance from the left end to the point of load application (in)
L is the total length of the beam (in)

Copyright 2016 Lockheed Martin Corporation.
Note: The current version is always the version on the Lockheed Martin network.

The values for K_L given in Table 6.4.1-1 are applicable if the beam is loaded along its centroidal axis as shown in Figure 6.4.1-2.

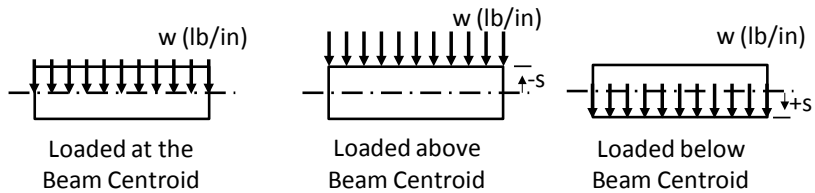

Figure 6.4.1-2 Example of Loading At, Above and Below Centroid

For loading above or below the centroidal axis, the value for K_L must be adjusted as follows

$$K_L' = K_L\left[1 + n\frac{s}{L}\right] \qquad \textbf{Equation 6.4.1-3}$$

where
K_L is the Lateral Stability constant from Table 6.4.1-1
n is a constant from Table 6.4.1-1 for the appropriate load and end conditions
s is the distance from the centroidal axis to the point of load application (in). Positive below the centroid, negative above the centroid. Reference Figure 6.4.1-2
L is the length of the beam (in)

Note the sign of the *n(s/L)* term in the equation along with the definition of the sign for *s* results in a critical buckling load which is increased if the load is applied at the bottom flange and reduced if the load is applied at the top flange.

The applied moment can be calculated from a free-body diagram of the beam or from beam solutions of Section 6.2.1.2. The margin of safety is calculated by

$$M.S. = \frac{M_{cr}}{m} - 1 \qquad \textbf{Equation 6.4.1-4}$$

where
M_{cr} is the critical allowable bending moment for lateral stability (in-lb)
m is the in-plane bending moment about the x axis from resulting from the applied load (in-lb)

6.4.2 Lateral Stability of Symmetric I-Section Beams

Symmetric I-section beams with narrow caps, whose lateral rigidity is much smaller than its flexural rigidity, are also subject to lateral buckling concerns. The approach is similar to that of rectangular beams; however because I-section beams are open sections which can warp under torsional loads, the lateral stability is a function of the warping constant as well as the torsional constant. The critical bending moment is given by Equation 6.4.1-1 except K_L is determined from Table 6.4.2-1. Material in Table 6.4.2-1 was derived from Reference 6-24.

To determine the parameter K_L, a parameter, β, relating the relative torsional stiffness of the beam, *GK*, to the warping stiffness, EC_w is calculated from

$$\beta = L\sqrt{\frac{GK}{EC_w}} \qquad \textbf{Equation 6.4.2-1}$$

where
C_w is the warping constant from Section 4.2.7 (in^6). It represents the ability of the cross section to resist twist or torsion due to differential bending or torsion-bending.

This parameter, β, is then used in with the appropriate end constraints and loading conditions in Table 6.4.2-1 to determine K_L. If a value not listed is required, linear interpolation will not yield the correct results; however, linear interpolation of the log values will provide the correct result. Example 6.4.2.2 is provided to illustrate this approach

Copyright 2016 Lockheed Martin Corporation.
Note: The current version is always the version on the Lockheed Martin network.

Table 6.4.2-1 Lateral Stability Constants for Symmetric I-Beams

Case	Side View	Top View	Lateral Stability Constant[1], K_L									
I-1	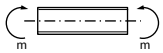 Simple-Simple	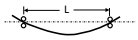 Lateral Support at Ends	β	0.32	1.00	1.41	2.00	2.45	2.83	3.16	3.46	4.00
			K_L	31.40	10.36	7.66	5.85	5.11	4.70	4.43	4.24	4.00
			β	4.47	4.90	5.29	5.66	6.00	6.32	10.00	31.62	Infinity
			K_L	3.83	3.73	3.66	3.59	3.55	3.51	3.29	3.14	π
$I\text{-}2_C$	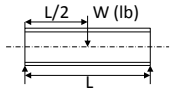 Simple-Simple	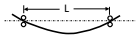 Lateral Support at Ends	β	0.63	2.00	2.83	4.00	4.90	5.66	6.93		
			K_L	21.60	7.98	6.40	5.45	5.08	4.90	4.70		
			β	8.00	8.94	9.80	12.65	15.49	17.89	20.00		
			K_L	4.58	4.53	4.48	4.38	4.35	4.30	4.30		
$I\text{-}2_U$	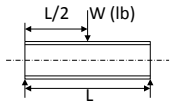 Simple-Simple		β	0.63	2.00	2.83	4.00	4.90	5.66	6.93		
			K_L	12.88	5.03	4.23	3.85	3.75	3.73	3.70		
			β	8.00	8.94	9.80	12.65	15.49	17.89	20.00		
			K_L	3.75	3.75	3.78	3.83	3.88	3.90	3.95		
$I\text{-}2_L$	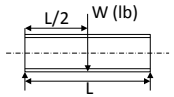 Simple-Simple		β	0.63	2.00	2.83	4.00	4.90	5.66	6.93		
			K_L	36.75	12.50	9.55	7.58	6.80	6.35	5.88		
			β	8.00	8.94	9.80	12.65	15.49	17.89	20.00		
			K_L	5.60	5.43	5.28	5.00	4.83	4.75	4.68		
I-3	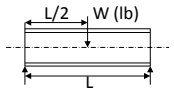 Simple-Simple	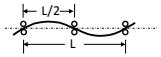 Lateral Support at Ends and at Center	β	0.63	2.00	2.83	4.00	5.66	9.80	11.31	14.14	20.00
			K_L	116.50	38.50	28.50	21.60	17.30	13.63	13.10	12.45	11.85
I-4	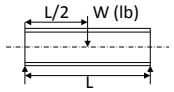 Simple-Simple	Lateral Retraint at Ends	β	0.63	2.00	2.83	4.00	4.90	5.66	8.00	11.31	14.14	17.89
			K_L	67.00	22.20	16.38	12.55	10.90	10.05	8.53	7.68	7.35	7.10
$I\text{-}5_C$	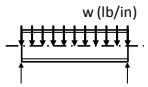 Simple-Simple	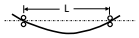 Lateral Support at Ends	β	0.63	2.00	2.83	4.00	4.90	5.66	6.93		
			K_L	17.88	6.63	5.33	4.54	4.23	4.08	3.94		
			β	8.00	8.94	11.31	14.14	16.73	18.97	20.00		
			K_L	3.81	3.76	3.68	3.63	3.60	3.58	3.58		

[1] Linear interpolation will produce incorrect results. Linear interpolation of logarithmic values will be correct. See Example, Section 6.2.2.2.

Copyright 2016 Lockheed Martin Corporation.
Note: The current version is always the version on the Lockheed Martin network.

Table 6.4.2-1 Lateral Stability Constants for Symmetric I-Beams

Case	Side View	Top View	Lateral Stability Constant[1], K_L
I-5$_U$	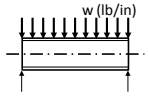 Simple-Simple	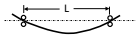 Lateral Support at Ends	β: 0.63, 2.00, 2.83, 4.00, 4.90, 5.66, 6.93 K_L: 11.61, 4.54, 3.80, 3.44, 3.33, 3.26, 3.24 β: 8.00, 8.94, 11.31, 14.14, 16.73, 18.97, 20.00 K_L: 3.24, 3.23, 3.25, 3.30, 3.31, 3.33, 3.34
I-5$_L$	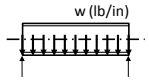 Simple-Simple		β: 0.63, 2.00, 2.83, 4.00, 4.90, 5.66, 6.93 K_L: 27.88, 9.68, 7.45, 6.00, 5.45, 5.06, 4.73 β: 8.00, 8.94, 11.31, 14.14, 16.73, 18.97, 20.00 K_L: 4.55, 4.39, 4.18, 4.01, 3.91, 3.88, 3.84
I-6$_C$	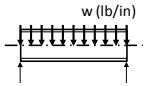 Simple-Simple	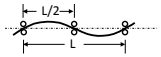 Lateral Support at Ends and at Center	β: 0.63, 2.00, 2.83, 4.00, 8.00, 9.80, 11.31, 14.14 K_L: 84.13, 27.63, 20.50, 15.75, 12.63, 9.94, 9.55, 9.10
I-6$_U$	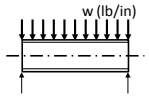 Simple-Simple		β: 0.63, 2.00, 2.83, 4.00, 8.00, 9.80, 11.31, 14.14 K_L: 73.38, 24.25, 18.13, 14.00, 11.44, 9.24, 8.95, 8.63
I-6$_L$	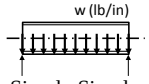 Simple-Simple		β: 0.63, 2.00, 2.00, 4.00, 8.00, 9.80, 11.31, 14.14 K_L: 96.75, 31.38, 23.13, 17.75, 14.00, 10.71, 10.21, 9.61
I-7	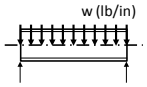 Simple-Simple	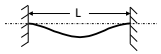 Lateral Retraint at Ends	β: 0.63, 2.00, 2.83, 4.00, 5.66, 9.80, 11.31, 14.14, 20 K_L: 61.00, 20.13, 14.88, 11.41, 9.13, 7.25, 6.98, 6.69, 6.40
I-8	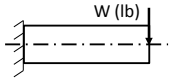 Cantilever	Lateral Retraint at Ends	β: 0.32, 1.00, 1.41, 1.73, 2.00, 2.45, 2.83 K_L: 44.30, 15.70, 12.20, 10.70, 9.76, 8.69, 8.03 β: 3.16, 3.46, 3.74, 4.00, 4.90, 5.66, 6.32 K_L: 7.58, 7.20, 6.96, 6.73, 6.19, 5.87, 5.64

Copyright 2016 Lockheed Martin Corporation.
Note: The current version is always the version on the Lockheed Martin network.

6.4.2.1 Approximate Solution for Lateral Stability of Open Section Beams with Caps

An approximate solution to the prediction of the lateral stability of open section beams with caps such as I-, C- or Z-sections loaded in pure bending is to examine the stability of the outstanding flange as a column buckling about its strong axis using the column buckling method of Section 8. Figure 6.4.2-1 illustrates the approach.

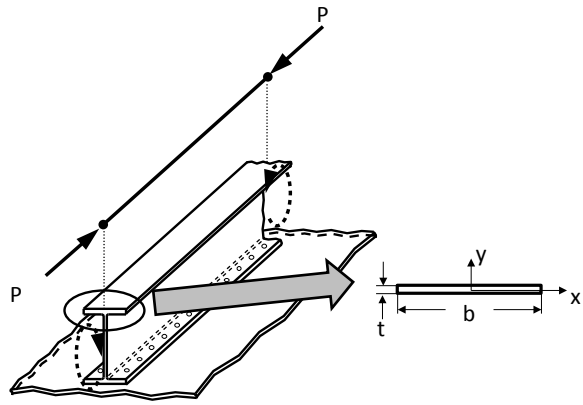

Figure 6.4.2-1 Idealization of I-Section for Approximate Lateral Stability Solution

The flange is assumed to be a column under compression loading. The load is determined from the compression stress in the cap. This stress can be calculated from a *mc/I* bending calculation or be obtained from a finite element model. The load is calculated as

$$P = f_c A_{cap}$$ **Equation 6.4.2-2**

where
f_c is the stress level in outstanding cap of the I-, C-, or Z-section (psi)
A_{cap} is the area of the outstanding cap only (in^2) = tb; Figure 6.4.2-1

The effect of the web as a support is completely ignored in this approximation which is a conservative assumption. The column fixity is taken to be what is appropriate for the cap only based on how its ends are constrained and the effective length, L', can be determined from Equation 8.2.1-9.

While the radius of gyration for column buckling is usually taken about the weaker bending axis, I_{min}, for this approximation, the radius of gyration is calculated using the cap's stronger axis. It is calculated as

$$\rho = \sqrt{\frac{I_y}{A_{cap}}} = 0.289b$$ **Equation 6.4.2-3**

where
I_y is the moment of inertia of the outstanding cap (only) about the y axis ($tb^3/12$)

Once the slenderness ratio, L'/ρ, is determined, the allowable column buckling stress, F_{col}, for the cap may be determined using the curves of Section 8.2.3 or the IDAT/SM83 program curves. The critical buckling load for the cap can be calculated from

$$P_{cr} = F_{col} A_{cap}$$ **Equation 6.4.2-4**

where
F_{col} is the allowable column buckling stress for the cap only, bending about its strong axis (psi)

Copyright 2016 Lockheed Martin Corporation.
Note: The current version is always the version on the Lockheed Martin network.

The approximate margin of safety for the entire section in lateral stability is given by

$$M.S. = \frac{P_{cr}}{P} - 1 \qquad \textbf{Equation 6.4.2-5}$$

where
P_{cr} is the critical buckling load from Equation 6.4.2-4 (lbs)
P is the applied cap compression load from Equation 6.4.2-2 (lbs)

Section 6.4.2.4 Example problem will illustrate this method and show a comparison between it and the exact solution.

6.4.2.2 Interpolation of Lateral Constraint Values from Table 6.4.2-1: Example Problem

Given a Symmetric I-Section Beam, with a load W applied at the center of the beam at the centroidal axis.
If β=1.193, determine the lateral stability constant, K_L

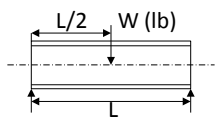

Table 6.4.2-1 Case I-2_c is used to determine K_L, but β is not listed, so an interpolation must be performed

From Table 6.4.2-1

β	K_L
0.63	21.60
1.193	K_L
2.00	7.98

It is noted that linear interpolation will not yield the correct answer, but linear interpolation of the log values will result in the correct answer.

Determine the log values of each of the terms

log(β)	log(K_L)
-0.2007	1.3345
0.0766	log(K_L)
0.3010	0.9020

Perform Interpolation

1. Determine Differences

$$\frac{0.3010 - 0.0766}{0.3010 - (-0.2007)} = \frac{0.9020 - \log(K_L)}{0.9020 - 1.3345}$$

$$\frac{0.2244}{0.5017} = \frac{0.9020 - \log(K_L)}{-0.4325}$$

$$\log K_L = 0.9020 - \frac{0.2244(-0.4325)}{0.5017} = 1.096$$

$$K_L = 10^{1.096} = 12.47$$

The plot on the next page of KL versus β illustrates the solution

Copyright 2016 Lockheed Martin Corporation.
Note: The current version is always the version on the Lockheed Martin network.

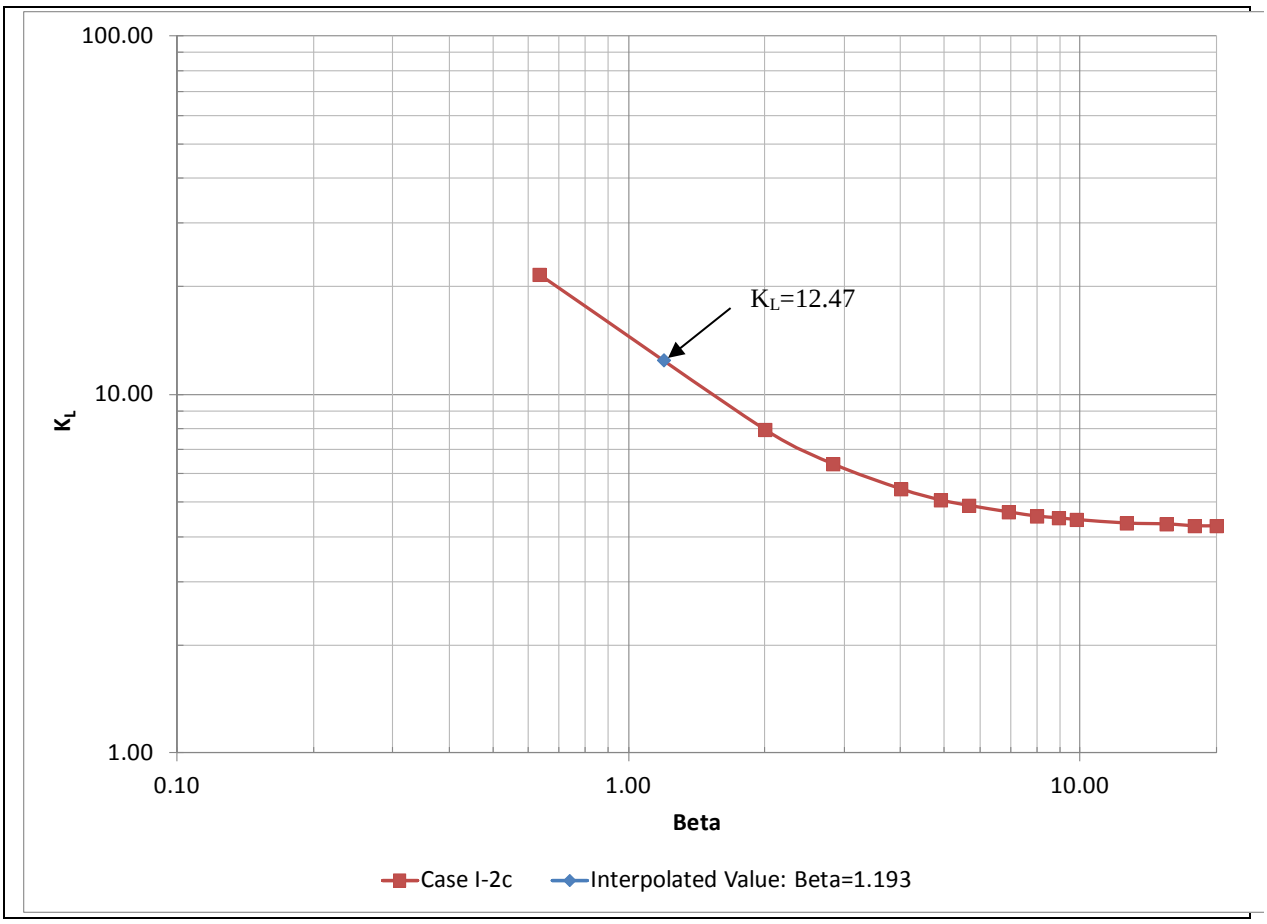

Copyright 2016 Lockheed Martin Corporation.
Note: The current version is always the version on the Lockheed Martin network.

6.4.2.3 Symmetric I-Section Beam Lateral Buckling: Example Problem

Given: Symmetric I-Beam shown
I_{xx}= 2.379 in^4
I_{yy}= 0.0212 in^4
A= 0.725 in^2
K=0.00276 in^4
Material: 7075-T6511 Extrusion
E=10.4x10^6 psi
G=4.0x10^6 psi

Beam is Simple-Simple
L=13 inches long
W=4750 lbs

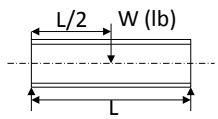

Assume it is supported laterally.

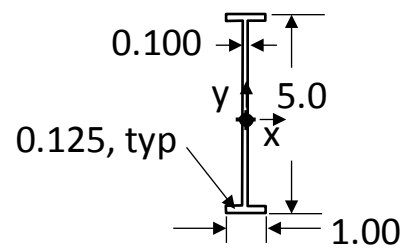

Construct the Beam Free body:
R_A=R_B = W/2 =4750/2=2375 lb
m_{max}=0.5P(L/2) = 0.5(4750)(13/2)=15438 in-lb
V_{AB}=W/2 = 0.5(4750) = 2375 lb
V_{BC}=-W/2=-0.5(4750)=2375 lb

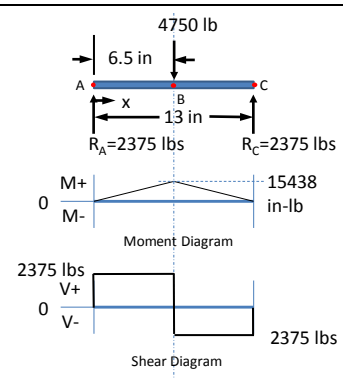

Calculate the warping factor, C_w PM4057 Section 4.2.7	$C_w = \frac{h'^2 I_{yy}}{4} = \frac{(5-0.125)^2(0.0212)}{4} = 0.1260 in^6$	C_w=0.1260 in^6
Calculate β	$\beta = L\sqrt{\frac{GK}{EC_w}} = 13\sqrt{\frac{4x10^6 \cdot 0.00276}{10.4x10^6 \cdot 0.1260}} = 1.193$	β=1.193
Determine K_L, Table 6.4.2.1, Case I-2$_C$	Interpolation performed in Section 6.4.2.2 Example Problem	K_L=12.47
Calculate M_{cr} per Equation 6.4.1-1	$M_{cr} = \frac{K_L}{L}\sqrt{EI_yKG} = \frac{12.47}{13}\sqrt{10.4x10^6 \cdot 0.0212 \cdot 0.00276 \cdot 4x10^6}$	M_{cr}=47325 in-lb
The maximum moment, from free-body diagram occurs at the center of the beam	m_{max}=15438 in-lb	m_{max}=15438 in-lb
Calculate Margin of Safety, Equation 6.4.1-4	$M.S. = \frac{M_{cr}}{m} - 1 = \frac{47325}{15438} - 1 = 2.07$	M.S. = 2.07 (Lateral Stability)

Copyright 2016 Lockheed Martin Corporation.
Note: The current version is always the version on the Lockheed Martin network.

6.4.2.4 Approximate Solution of Symmetric I-Section Beam of Section 6.4.2.3: Example Problem

For the Beam Problem of Section 6.4.2.3, use the approximate solution method of Section 6.4.2.1 to determine the Lateral Stability Margin of Safety Beam is Simple-Simple L=13 inches long W=4750 lbs 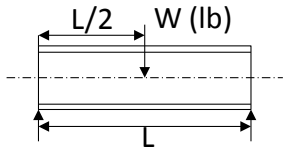 Assume it is supported laterally.	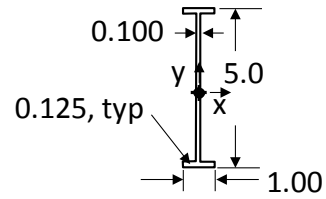 A_{cap} = 1.00(0.125)=0.125 in^2
Given: Symmetric I-Beam shown I_{xx}= 2.379 in^4 I_{yy}= 0.0212 in^4 Material: 7075-T6511 Extrusion	From beam free-body diagram Section 6.4.2.3, m_{max}=15438 in-lb

Calculate the maximum bending stress. c=5.0/2=2.50	$f_b = \frac{mc}{I_x} = \frac{15438 \cdot 2.50}{2.379} = \pm 16223\ psi$	f_b=16223 psi
Determine P using Equation 6.4.2-2 f_c=-f_b	$P = f_c \cdot A_{cap} = -16223(0.125) = -2028\ lbs$	P=-2028 lbs
Calculate radius of gyration for cap as a column	$\rho = 0.289b = 0.289(1) = 0.289\ in$	ρ=0.289 in
In lateral direction, cap is supported, but not restrained, therefore, the column fixity parameter c=1.0	L'=L=13 in	L'=13in
Calculate the slenderness ratio	L'/ρ=13/0.289=44.98	L'/ρ=44.98
Determine F_{col} from IDAT/SM83 curve for L'/ρ=44.98	F_{col}=42500 psi	F_{col}=42500 psi
Calculate P_{cr} using Equation 6.4.2-4	$P_{cr} = F_{col}A_{cap} = 42500 \cdot 0.125 = 5313\ lbs$	P_{cr}=5313 lbs
Calculate M.S. using Equation 6.4.2-5	$M.S. = \frac{P_{cr}}{P} - 1 = \frac{5313}{2028} - 1 = 1.62$	M.S.=1.62 Lateral Stability
The exact solution resulted in a margin of safety of 2.08 while the approximate method resulted in a margin of safety of 1.62. This is a conservative result which might be used as a quick method for iterating on cap width or rough sizing of a beam in preliminary design.		

6.4.3 Lateral Stability of C- and Z-Sections and Singly Unsymmetrical I-Section Beams

The last group of beams to be discussed for lateral instability is Channel- and Z-Sections with equal length legs and I-Section which are symmetrical about the vertical axis but unsymmetrical about the horizontal axis as shown in Figure 6.4.3-1.

Copyright 2016 Lockheed Martin Corporation.
Note: The current version is always the version on the Lockheed Martin network.

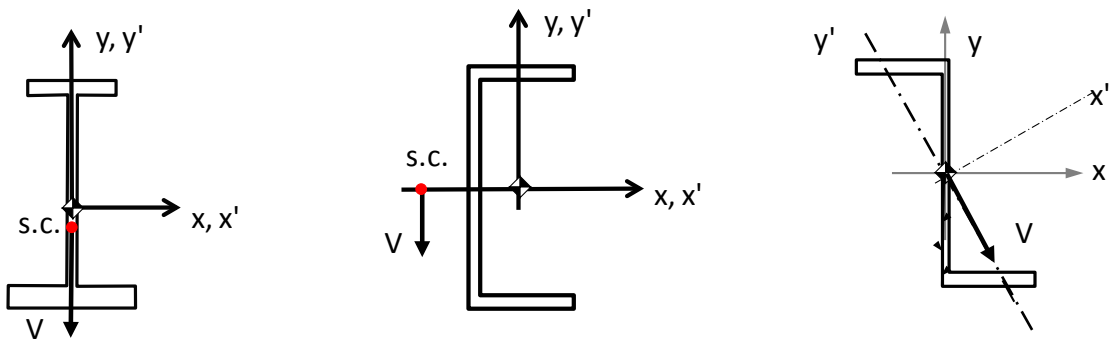

Equation 6.4.3-3 Table 6.4.3-1 | Equation 6.4.3-4 Table 6.4.3-2 | Equation 6.4.3-4 Table 6.4.3-2

Figure 6.4.3-1 Configuration and Loading for Unsymmetrical I-Beams, Equal-Legged C- and Z-Sections for which Lateral Stability Solutions are Available

These beams will also buckle laterally if they have narrow caps and a lateral rigidity which is much smaller than their flexural rigidity. The solutions provided for this group of beam geometries offer only approximate solutions and are limited in load application. They are only applicable within the elastic range and have been shown to be significantly unconservative if used in conjunction with tangent modulus to predict buckling in the plastic range. It is recommended that for these beams the specific configuration undergo testing. See References 6-26 and 6-27 for further information.

This formulation assumes the line of action of the load passes through the shear center and centroid, as shown for the I- and Z-sections or that the shear center is on the principal axis through the centroid and the load is applied at the shear center as shown for the C-section. Additionally it is assumed that any applied loads remain parallel to their initial direction when the beam deflects.

The general equation for the elastic lateral buckling of beams is given by

$$M_{cr} = C_1 \frac{{K_L}^2 E I_y}{L^2}\left[C_2 s + C_3 k + \sqrt{(C_2 s + C_3 k)^2 + \frac{C_w}{I_y}\left(1 + \frac{KGL^2}{{K_L}^2 E C_w}\right)}\right] \qquad \textbf{Equation 6.4.3-1}$$

where
C_1, C_2, C_3 and K_L are constants which are a function of loading and supports
E is the material elastic modulus (psi)
I_y is the moment of inertia about the weak axis (in^4)
L is the length of the beam (in)
s is the distance between the shear center and load application point (in). Positive when below the shear center
C_w is the warping constant from Section 4.2.7 (in^6)
K is the St. Venant torsional constant (in^4). Refer to Section 4.2.2
G is the material shear modulus (psi)

$$k = e + \frac{1}{2I_x}\int_A y(x^2 + y^2)dA$$

The solution of Equation 6.4.3-1 can be very complex; however for a few cross sections such as those addressed in this section, the equation can be simplified because of specific geometries or simplifying assumptions.

Copyright 2016 Lockheed Martin Corporation.
Note: The current version is always the version on the Lockheed Martin network.

If k is approximated by the distance from the shear center to the centroid, $k=e$ and the load is applied at the shear center, s=0, then the critical moment for an I-section unsymmetrical about the horizontal axis is given by

$$M_{cr} = C_1 \frac{K_L{}^2 E I_y}{L^2}\left[C_3 e + \sqrt{(C_3 e)^2 + \frac{C_w}{I_y}\left(1 + \frac{KGL^2}{K_L{}^2 E C_w}\right)}\right] \qquad \textbf{Equation 6.4.3-2}$$

Where
C_1, C_3 are constants given in Table 6.4.3-1
K_L is the lateral stability constant from Table 6.4.3-1
e is the distance from the shear center to the centroid (in)

Table 6.4.3-1 Lateral Stability Constants for I-Sections Unsymmetrical About the Horizontal Axis (Equation 6.4.3-2)

Case	Side View	Top View	C_1	C_3	K_L
UI-1	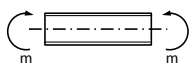 Applied Moment	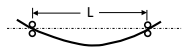 Lateral Support	1.0	1.0	3.14
UI-2		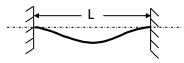 Lateral Constraint	1.0	1.0	6.28

Substituting $C_1 = C_3 = 1.0$, Equation 6.4.3-2 simplifies to

$$M_{cr} = \frac{K_L{}^2 E I_y}{L^2}\left[e + \sqrt{(e)^2 + \frac{C_w}{I_y}\left(1 + \frac{KGL^2}{K_L{}^2 E C_w}\right)}\right] \qquad \textbf{Equation 6.4.3-3}$$

Where
K_L is the lateral stability constant from Table 6.4.3-1

For sections which are symmetric about the horizontal axis but not the vertical axis, *e.g.*, equal-legged C-sections, k in Equation 6.4.3-1 is equal to zero. This is also applicable to sections which have point symmetry like Z-sections loaded along their principal axes. If, additionally there are no transverse loads or the transverse loads are applied at the shear center, then s is also zero, and Equation 6.4.3-1 becomes

$$M_{cr} = C_1 \frac{K_L}{L}\left[\sqrt{E I_y\left(\frac{K_L{}^2 E C_w}{L^2} + GK\right)}\right] \qquad \textbf{Equation 6.4.3-4}$$

where
K_L, C_1 are taken from Table 6.4.3-2

Table 6.4.3-2 Lateral Stability Constants for Equal Legged C- and Z-Sections with Load Applied at the Shear Center (Equation 6.4.3-4)

Case	Side View	Top View	C_1	K_L
CZ-1	Simple-Simple	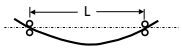 Lateral Support	1.0	3.14
CZ-2		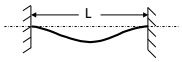 Lateral Restraint	1.0	6.28
CZ-3		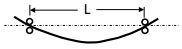 Lateral Support	1.35	3.14

Copyright 2016 Lockheed Martin Corporation.
Note: The current version is always the version on the Lockheed Martin network.

Case	Side View	Top View	C_1	K_L
CZ-4	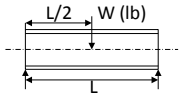 Simple-Simple	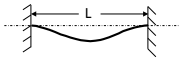 Lateral Restraint	1.07	6.28
CZ-5	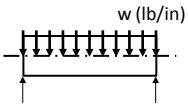 Simple-Simple	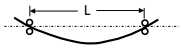 Lateral Support	1.13	3.14
CZ-6		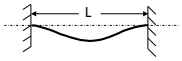 Lateral Restraint	0.97	6.28
CZ-7	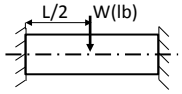 Fixed-Fixed	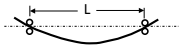 Lateral Support	1.70	3.14
CZ-8		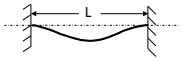 Lateral Restraint	1.04	6.28
CZ-9	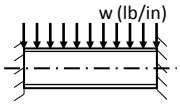 Fixed-Fixed	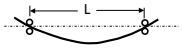 Lateral Support	1.30	3.14
CZ-10		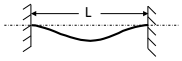 Lateral Restraint	0.86	6.28
CZ-11	Fixed-Free	Warping restrained Laterally at Supported End	1.28	3.14
CZ-12	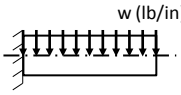 Fixed-Free	Warping restrained Laterally at Supported End	2.05	3.14

Cases CZ-11 and CZ-12 provide conservative results for fixed-free beams as C_1 and K_L vary depending on beam proportion and minimum values are reported in Table 6.4.3-2.

For beams undergoing oblique loading such that the bending moment does not lie in one of the principal planes of the cross section, *e.g.*, Z-sections with loads applied not along their principal axes, and the transverse loads are applied at the shear center, then I_y is replaced with ($I_{x'}I_{y'}/I_x$) and Equation 6.4.3-3 becomes

$$M_{cr} = C_1 \frac{K_L}{L}\left[\sqrt{E\frac{I_{x'}I_{y'}}{I_x}\left(\frac{{K_L}^2 E C_w}{L^2} + GK\right)}\right] \qquad \textbf{Equation 6.4.3-5}$$

where
K_L, C_1 are taken from Table 6.4.3-1
$I_{x'}$, $I_{y'}$ are the moments of inertia about the x and y principal axes, respectively (in^4)
I_x is the moment of inertia about the strong axis (in^4)

This is also applicable if there are no transverse loads applied.

For all of the cross sections covered, the applied moment can be calculated from a free-body diagram of the beam or from beam solutions of Section 6.2.1.2. The margin of safety is calculated using Equation 6.4.1-4 or Section 6.2.2.

Copyright 2016 Lockheed Martin Corporation.
Note: The current version is always the version on the Lockheed Martin network.

6.5 Beam Shear Stress

This section presents the flexural shear stress distribution and the development of shear flow, which are used in Section 6.6.

6.5.1 Shear Stress Distribution – Symmetrical Sections

An applied shear load parallel to a beam section results in shear stresses which are distributed over the cross-sectional area. The distribution of these stresses is dependent upon the shape of the cross section. The magnitude of the shear stress at any point is obtained through a summation of the horizontal forces acting on the beam segment adjacent to that point. This concept is developed below.

For the cantilever beam shown, there is an increase in bending stress on the right side of an incremental element due to the shear load acting over the length dx:

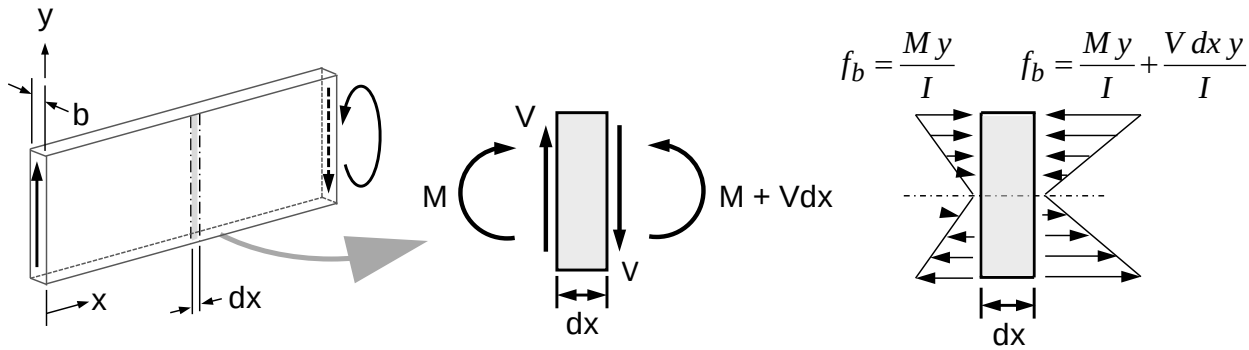

Figure 6.5.1-1 Incremental Bending Stress in a Beam due to Shear

The force acting on a cross section located a distance y_1 above the neutral axis is determined by considering the portion of the beam segment above this point as a free body:

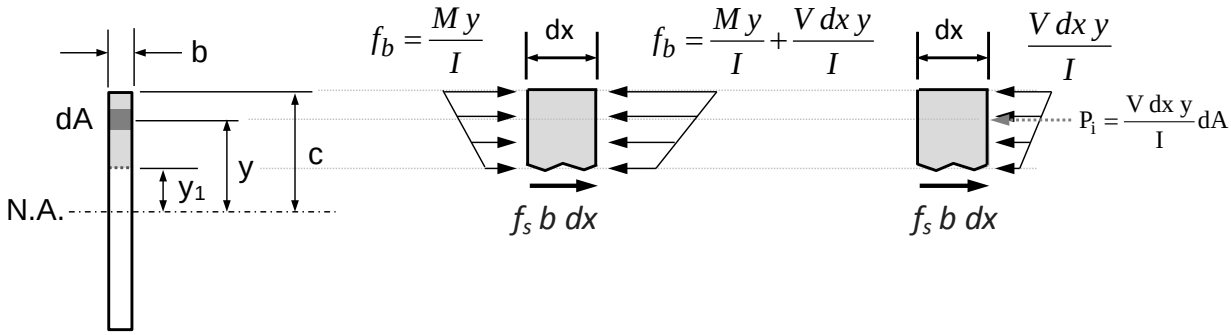

Figure 6.5.1-2 Development of Horizontal Shear Stress

The axial load acting on an element dA in Figure 6.5.1-2 is equal to the bending stress increment at a distance y from the neutral axis, acting over the differential area:

$$P_i = \frac{V(dx)y}{I}dA$$

Copyright 2016 Lockheed Martin Corporation.
Note: The current version is always the version on the Lockheed Martin network

Integrating the axial load on the segment above y_1 and summing horizontal forces determines the total shear load acting on the cross section at y_1:

$$f_s b(dx) = \int_{y_1}^{c} \frac{V(dx)y}{I} dA$$

Solving for f_s:

$$f_s = \int_{y_1}^{c} \frac{V}{Ib} y dA$$

Recognizing that the first area moment is:

$$Q = \int_{y_1}^{c} y dA$$

The horizontal shear stress is rewritten as:

$$f_s = \frac{VQ}{Ib} \qquad \textbf{Equation 6.5.1-1}$$

Where:
f_s is the shear stress (psi)
b is the section width at the analysis location (in)
dx is the incremental length of the beam (in)
V is the beam shear load (lb)
y is the distance from the neutral axis to the element dA (in)
I is the moment of inertia of the entire cross section (in^4)
Q is the first area moment for the portion of the cross section above y_1 (in^3)

The use of Equation 6.5.1-1 is subject to the limitations listed in Table 6.5.1-1.

Table 6.5.1-1: Limitations in Use of Horizontal Shear Stress Equation

Requirement	Alternate Analysis Method if Requirement Not Met
The beam must be of relatively uniform cross section (i.e., no significant taper to the beam).	Reference Section 6.5.1.2
The section must be symmetrical about either a horizontal or vertical axis through the centroid (i.e., these must be the principal axes for the cross section).	Reference Section 6.5.2
The beam bending stresses must be in the elastic range.	A shear peaking factor is required, described in Section 6.3.2.3.

It is seen that Equation 6.5.1-1 uses the vertical shear force to calculate the horizontal shearing stress, often termed "flexural shear stress". Figure 6.5.1-3 shows the shear stresses acting on a small element in the cross section of the beam. To preserve moment equilibrium of the element, the vertical shear stress ($f_{s\text{-}v}$) must be equal to the horizontal shear stress ($f_{s\text{-}h}$). Since the shear force is the product of the shear stress and its respective area, the shear forces acting on perpendicular faces of the element are not equal unless the element is square.

A complete derivation of this material can be found in Reference 6-8 or other strength of materials texts.

Copyright 2016 Lockheed Martin Corporation.
Note: The current version is always the version on the Lockheed Martin network

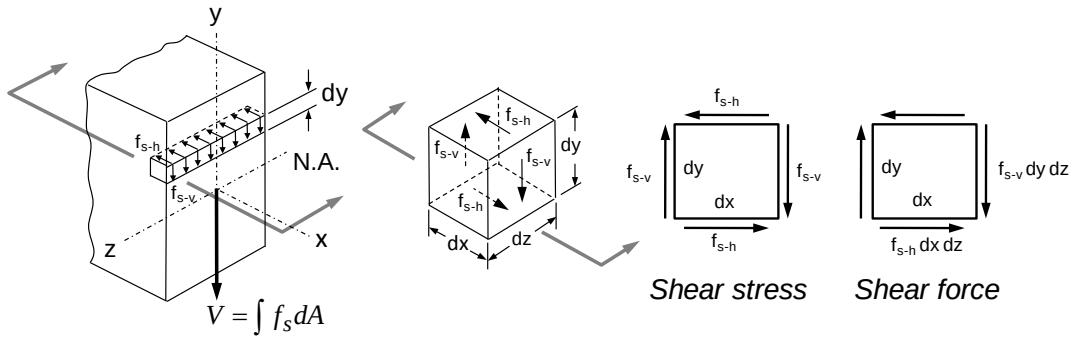

Figure 6.5.1-3 Shear Stress of an Incremental Element

Thus, Equation 6.5.1-1 is used to calculate both the vertical and horizontal shear stresses in a symmetric beam section, with the exceptions noted below. The horizontal shear stresses are used directly for strength analysis of the beam, as well as in the internal loads development of skin attachments and splice joints.

Using the shear stress, the margin of safety is calculated using the material ultimate shear strength as shown:

$$M.S. = \frac{F_{su}}{f_s} - 1$$ **Equation 6.5.1-2**

Where:
F_{su} is the shear ultimate material property (psi)
f_s is the applied shear stress (psi)

If a Limit shear strength check is required, the shear yield strength may be approximated through use of Equation 3.3.3-5.

Shear and bending stresses combine at locations on the beam cross section away from the neutral axis and require strength interaction per Section 2.5. Additional load components (e.g. axial, torsion, etc…) are also included in the strength analysis as applicable. *Note that if the bending stresses exceed the material proportional limit, the shear stresses must be corrected for plasticity effects per Section 6.3.2.3.*

For beams of symmetric cross section which are constant along their length, it is convenient to calculate the horizontal shear stress through use of equation 6.5.1-1, as shown for the example in Section 6.5.1.1. It is noted that identical results are obtained through a summation of forces (due to bending) on the various elements of two cross sections a distance apart. *When the beam is not of constant cross section, the horizontal shear stresses must be determined through the latter method, as the accuracy of Equation 6.5.1-1 is reduced for tapered beams.* An example calculation is shown in Section 6.5.1.2.

For convenience, the maximum shear stress on a cross section may be expressed in terms of the average shear stress, through use of Equation 6.5.1-3:

$$f_{s,max} = \alpha \frac{V}{A}$$ **Equation 6.5.1-3**

Where:
$f_{s,max}$ is the maximum shear stress acting on the cross section (psi)
α is the shape factor, dependent upon the cross section
V is the shear load acting on the section (lb)

Copyright 2016 Lockheed Martin Corporation.
Note: The current version is always the version on the Lockheed Martin network

A is the cross sectional area (in^2)

The shape factor α is determined from the geometric parameters *Q/(Ib)*. Table 6.5.1-2 presents the shape factors and location of maximum shear stress for several common cross sections.

Table 6.5.1-2: Shape Factors to Determine Maximum Shear Stress for Common Cross sections

Cross section	α	Location of Maximum Shear Stress, e (in)
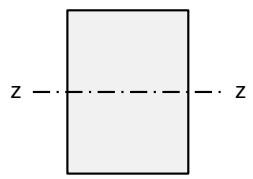	$\frac{3}{2}$	0
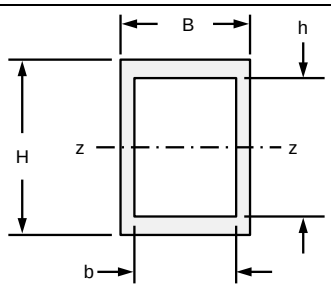	$\frac{3}{2}\left(\frac{BH^2-bh^2}{BH^3-bh^3}\right)$	0
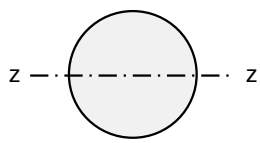	$\frac{4}{3}$	0
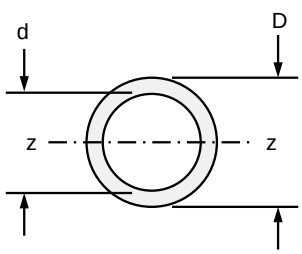	$\frac{4}{3}\left(1+\frac{Dd}{D^2+d^2}\right)$	0
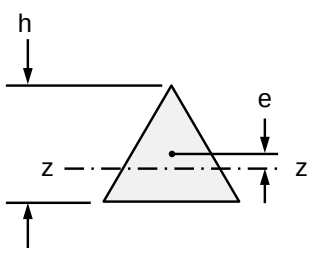	$\frac{3}{2}$	$\frac{h}{6}$

Copyright 2016 Lockheed Martin Corporation.
Note: The current version is always the version on the Lockheed Martin network

6.5.1.1 Example Calculation - Horizontal Shear Stress in a Symmetrical Beam Section

Given:
For the beam section of dimensions shown, determine the horizontal shear stress distribution through the height of the cross section, using an applied vertical shear load of 10,000 lb. Calculate the minimum Margin of Safety in shear at room temperature.

The section is symmetric about the vertical axis. Applicable section properties are shown below. The fillet radii are neglected in the stress calculations.

y_{BAR} = 1.995 in

$I_{z\text{-}z}$ = 6.916 in^4

Material:
Aluminum 7050-T74511 Extrusion
F_{tu} = 71,000 psi, F_{ty} = 60,000 psi, F_{su}=38,000 psi
E= 10.3x10^6 psi

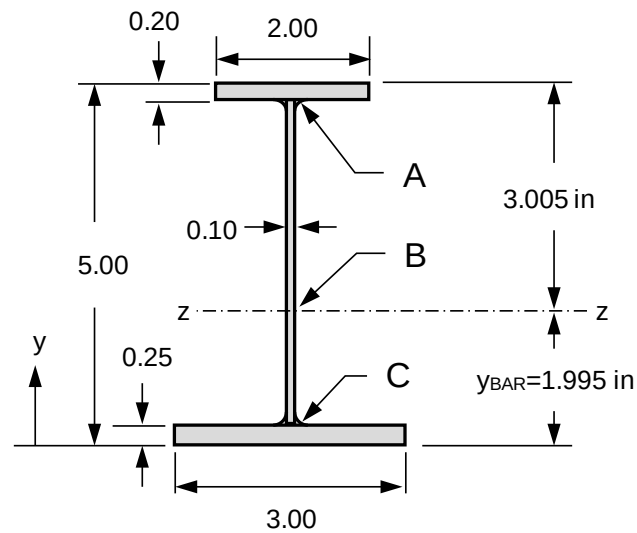

Solution Step	Calculation
Using Eqn. 4.2.1-4, calculate Q for the portions of the section above Points A and B, and below Point C. Note that Q_C is negative since the flange is below the neutral axis.	$Q = \int ydA = \Sigma ydA$ $Q_A = (3.005\ in - 0.10\ in)(2.0\ in)(0.20\ in) = 1.162\ in^3$ $Q_B = 1.162\ in^3 + \frac{(3.005\ in - 0.20\ in)}{2}(3.005\ in - 0.20\ in)(0.10\ in) = 1.555\ in^3$ $Q_C = (-1.995\ in + 0.125\ in)(3.0\ in)(0.25\ in) = -1.403\ in^3$
Using Eqn. 6.5.1-1, calculate the horizontal shear stresses above and below Points A and C, as well as the maximum value at point B.	$f_s = \frac{VQ}{Ib}$ $f_{s,A(above)} = \frac{10{,}000\ lb(1.162\ in^3)}{6.916\ in^4(2.0\ in)} = 840\ psi$ $f_{s,A(below)} = \frac{10{,}000\ lb(1.162\ in^3)}{6.916\ in^4(0.10\ in)} = 16{,}802\ psi$ $f_{s,B(above)} = \frac{10{,}000\ lb(1.555\ in^3)}{6.916\ in^4(0.10\ in)} = 22{,}484\ psi$ $f_{s,C(above)} = \frac{10{,}000\ lb(-1.403\ in^3)}{6.916\ in^4(0.10\ in)} = -20{,}286\ psi$ $f_{s,C(below)} = \frac{10{,}000\ lb(-1.403\ in^3)}{6.916\ in^4(3.0\ in)} = -676\ psi$

Copyright 2016 Lockheed Martin Corporation.
Note: The current version is always the version on the Lockheed Martin network

Using the values above, plot the horizontal shear stress distribution through the height of the cross section.	Horizontal Shear Stress Distribution: 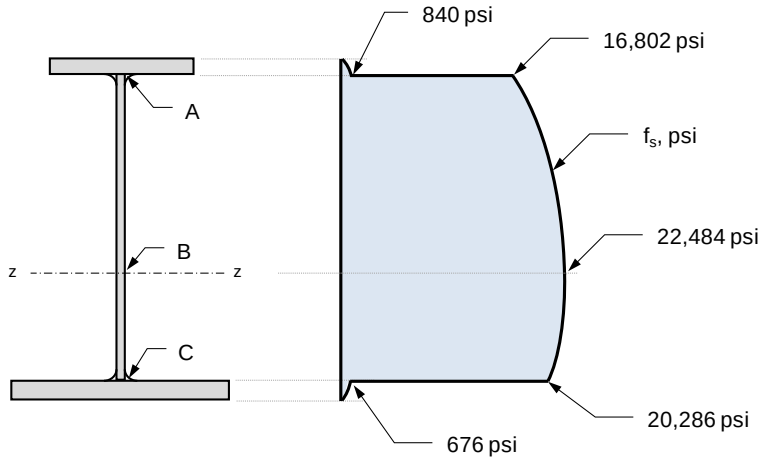
Note that although the sign of the horizontal shear stress changes below the neutral axis, the effect on the beam is the same, as shown right.	Sense of the shear acting on element in the cross section above and below the neutral axis: 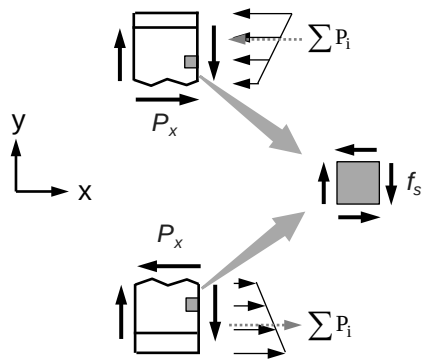
Calculate the minimum Margin of Safety in shear using Equation 6.5.1-2.	$MS_{ULT} = \frac{F_{su}}{f_s} - 1 = \frac{38{,}000\ psi}{22{,}484\ psi} - 1 = +\underline{0.69}$

In this example the web was of constant thickness, resulting in the neutral axis being the location of maximum shear stress. When web thickness variations occur, the shear flow will remain maximum at the neutral axis, but the shear stress may be critical elsewhere.

Copyright 2016 Lockheed Martin Corporation.
Note: The current version is always the version on the Lockheed Martin network

6.5.1.2 Example Calculation - Horizontal Shear Stress in a Symmetrical Beam with Varying Cross Section

Given:
For the cantilever beam section shown, determine the horizontal shear stress distribution through the height of the cross section and the minimum Margin of Safety in shear at room temperature.

The applied shear load is 6,500 lb. Assume the beam is restrained against out-of-plane displacement.

The beam flanges are tapered between sections 6 in and 14 in from the left end of the beam, as shown. Applicable section properties are given below. The fillet radii are neglected in the stress calculations.

Material:
Aluminum 7050-T74511 Extrusion
F_{tu} = 71,000 psi, F_{ty} = 60,000 psi,
F_{su}=38,000 psi
E= 10.3×10^6 psi

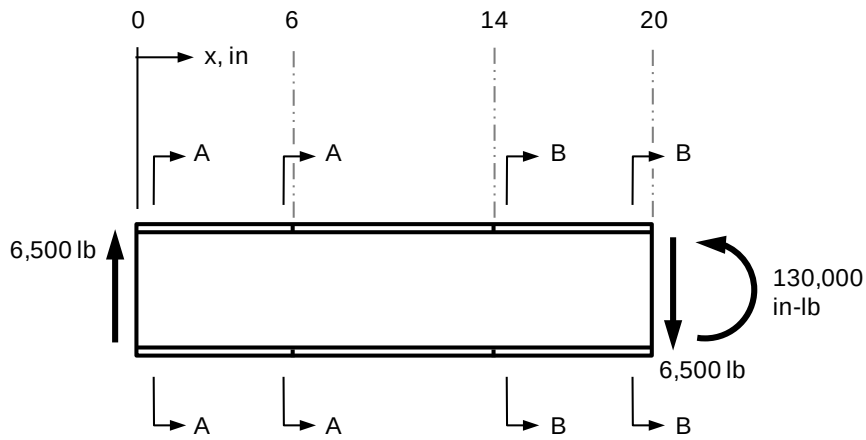

Note that flange widths only are tapered. The beam height is constant.

Section Properties:

Section A-A:

y_{BAR} = 2.112 in

$I_{z\text{-}z}$ = 3.900 in^4

Section B-B:

y_{BAR} = 1.995 in

$I_{z\text{-}z}$ = 6.916 in^4

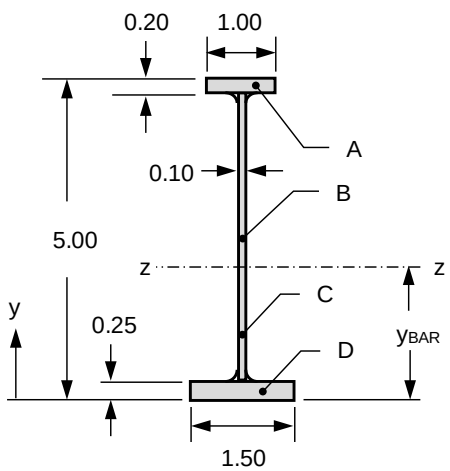

SECTION A - A

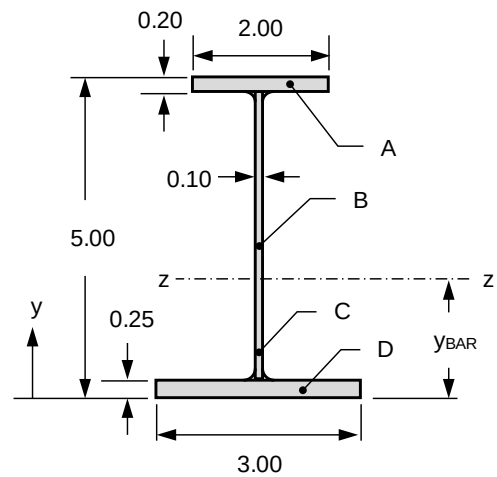

SECTION B - B

Copyright 2016 Lockheed Martin Corporation.
Note: The current version is always the version on the Lockheed Martin network

Solution Step	Calculation
Determine the axial loads on the Segments A-D on the cross sections, by calculating bending stresses at Points 1-5.	A sample calculation of the segment loads, P_A through P_D, for Section A (x=6 in) is shown:

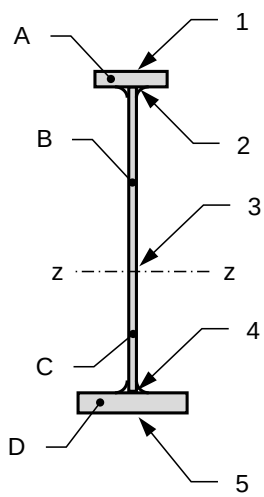

SECTION A – A

(Numbering Typical for both sections)

$$M_A = V(x) = 6{,}500\ lb\ (6\ in) = 39{,}000\ in - lb$$

$$f_{b1} = -\frac{My_1}{I} = \frac{(-39{,}000\ in\text{-}lb)(5.00\ in - 2.112\ in)}{3.900\ in^4} = -28{,}880\ psi$$

$$f_{b2} = -\frac{My_2}{I} = \frac{(-39{,}000\ in\text{-}lb)(5.00\ in - 2.112\ in\ - 0.200\ in)}{3.900\ in^4} = -26{,}880\ psi$$

$$f_{b3} = -\frac{My_3}{I} = 0$$

$$f_{b4} = -\frac{My_4}{I} = \frac{(-39{,}000\ in\text{-}lb)\big(-2.112\ in - (-0.25\ in)\big)}{3.900\ in^4} = 18{,}620\ psi$$

$$f_{b5} = -\frac{My_5}{I} = \frac{(-39{,}000\ in\text{-}lb)(-2.112\ in)}{3.900\ in^4} = 21{,}120\ psi$$

$$P_A = \left(\frac{f_{b1}\ +\ f_{b2}}{2}\right)(bt)_A = \left(\frac{-28{,}880\ psi - 26{,}880\ psi}{2}\right)(1.00\ in)(0.200\ in) = -5{,}576\ lb$$

$$P_B = \left(\frac{f_{b2}\ +\ f_{b3}}{2}\right)(bt)_B$$

$$P_B = \left(\frac{-26{,}880\ psi - 0\ psi}{2}\right)(0.100\ in)(5.00\ in - 2.112\ in - 0.200\ in) = \ -3{,}613\ lb$$

$$P_C = \left(\frac{f_{b3}\ +\ f_{b4}}{2}\right)(bt)_C$$

$$P_C = \left(\frac{0\ psi + 18{,}620\ psi}{2}\right)(0.100\ in)(2.112\ in - 0.250\ in) = \ 1{,}734\ lb$$

$$P_D = \left(\frac{f_{b4}\ +\ f_{b5}}{2}\right)(bt)_D = \left(\frac{18{,}620\ psi + 21{,}120\ psi}{2}\right)(1.50\ in)(0.25\ in) = 7{,}451\ lb$$

A similar set of calculations can be made for Section B. The internal load summary in shown in the table below:

Beam Sta., (in)	M, (in-lb)	f_{b1}, (psi)	f_{b2}, (psi)	f_{b3}, (psi)	f_{b4}, (psi)	f_{b5}, (psi)	P_A, (lb)	P_B, (lb)	P_C, (lb)	P_D, (lb)
6	39,000	-28,880	-26,880	0	18,620	21,120	-5,576	-3,613	1,734	7,451
14	91,000	-39,539	-36,908	0	22,961	26,250	-15,289	-5,176	2,003	18,454

Copyright 2016 Lockheed Martin Corporation.
Note: The current version is always the version on the Lockheed Martin network

Determine the free body forces for each segment above the neutral axis. The total shear load acting on each segment is the difference between the axial loads acting at x=6 and x=14 inches, respectively.	Above the neutral axes: 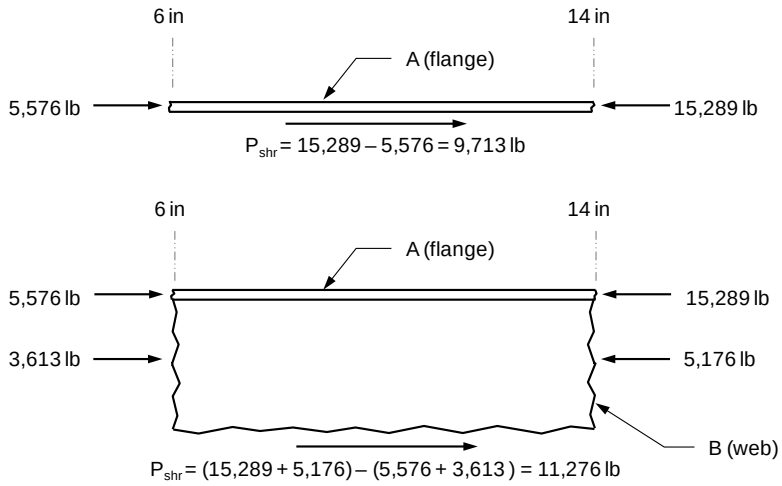 	
Calculate the shear stresses at Points 1, 2 and 3. Note the shear flow is constant between x=6 and x=14 inches; the shear stresses may vary if the width, b, is not constant.	At x=6 in : $f_s = \frac{P_{shr}}{L(b)}$ f_{s1}= 0 psi (free edge of the part) $f_{s2,above} = \frac{9{,}713\ lb}{8\ in(1.0\ in)} = 1{,}214\ psi$ $f_{s2,below} = \frac{9{,}713\ lb}{8\ in(0.10\ in)} = 12{,}141\ psi$ $f_{s3,above} = \frac{11{,}276\ lb}{8\ in(0.10\ in)} = 14{,}095\ psi$	At x=14 in : $f_s = \frac{P_{shr}}{L(b)}$ f_{s1}= 0 psi (free edge of the part) $f_{s2,above} = \frac{9{,}713\ lb}{8\ in(2.0\ in)} = 607\ psi$ $f_{s2,below} = \frac{9{,}713\ lb}{8\ in(0.10\ in)} = 12{,}141\ psi$ $f_{s3,above} = \frac{11{,}276\ lb}{8\ in(0.10\ in)} = 14{,}095\ psi$
Determine the free body forces for each segment below the neutral axis. The total shear load acting on each segment is the difference between the axial loads acting at x=6 and x=14 inches, respectively.	Below the neutral axes :	

Copyright 2016 Lockheed Martin Corporation.
Note: The current version is always the version on the Lockheed Martin network

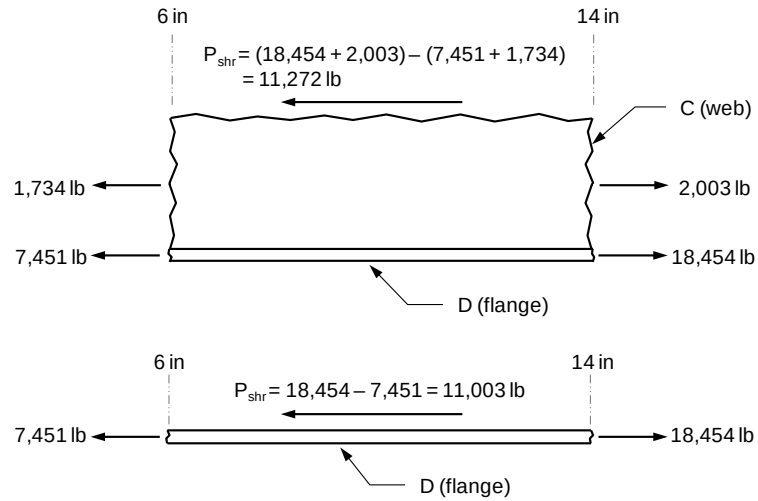

Calculate the shear stresses at Points 3, 4 and 5.	At x=6 in : $f_{s3,below} = \frac{11{,}272\ lb}{8\ in(0.10\ in)} = 14{,}090\ psi$ (as a check of $f_{s3,above}$) $f_{s4,above} = \frac{11{,}003\ lb}{8\ in(0.10\ in)} = 13{,}754\ psi$ $f_{s4,below} = \frac{11{,}003\ lb}{8\ in(1.50\ in)} = 917\ psi$ $f_{s5} = 0\ psi$ (free edge of the part)	At x=14 in : $f_{s3,below} = \frac{11{,}272\ lb}{8\ in(0.10\ in)} = 14{,}090\ psi$ (as a check of $f_{s3,above}$) $f_{s4,above} = \frac{11{,}003\ lb}{8\ in(0.10\ in)} = 13{,}754\ psi$ $f_{s4,below} = \frac{11{,}003\ lb}{8\ in(3.00\ in)} = 458\ psi$ $f_{s5} = 0\ psi$ (free edge of the part)

Plot the shear stress distribution at Section A-A.

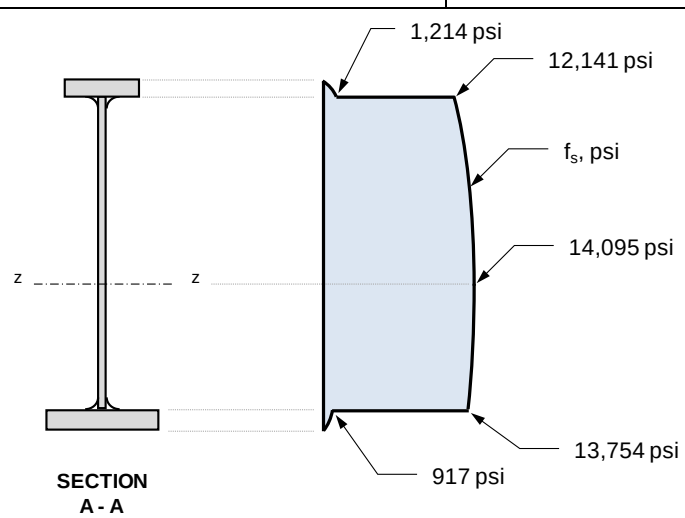

Copyright 2016 Lockheed Martin Corporation.
Note: The current version is always the version on the Lockheed Martin network

Plot the shear stress distribution at Section B-B. Note that the shear stresses are the same at Sections A-A and B-B except at the flanges, due to their taper.	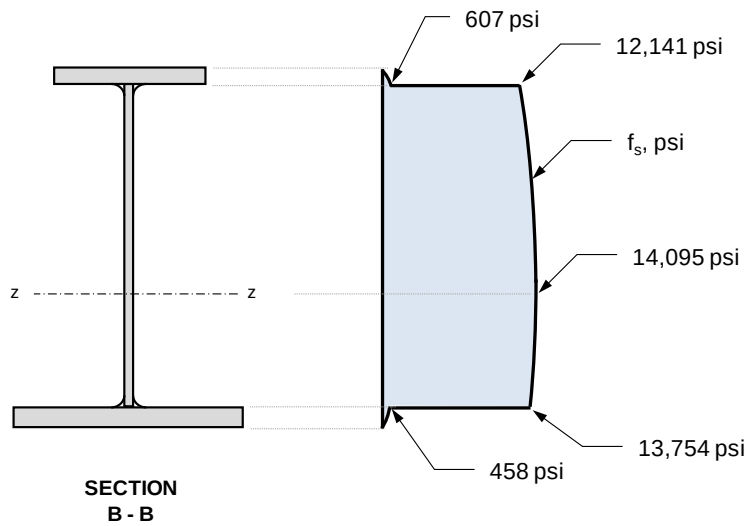
Calculate the Margin of Safety in Shear using Equation 6.5.1-2.	$MS_{ULT} = \frac{F_{su}}{f_s} - 1 = \frac{38{,}000\ psi}{14{,}095\ psi} - 1 = +\underline{0.03}$

Copyright 2016 Lockheed Martin Corporation.
Note: The current version is always the version on the Lockheed Martin network

Compare the shear stresses at the two sections with those obtained using Equation 6.5.1-1.

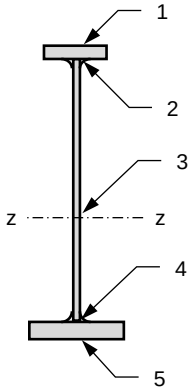

SECTION A – A

(Numbering typ. both sections)

	x=6 in		x=14 in	
Point	fs, psi	fs, psi (Eq. 6.5.1-1)	fs, psi	fs, psi (Eq. 6.5.1-1)
1	0	0	0	0
2A	1,214	929	607	546
2B	12,141	9,293	12,141	10,921
3	14,095	15,315	14,095	14,615
4A	13,754	12,418	13,754	13,186
4B	916	828	458	440
5	0	0	0	0
	Correct	Incorrect	Correct	Incorrect

This comparison is provided for reference only; as stated, Equation 6.5.1-1 should not be used for tapered sections.

6.5.2 Shear Stress Distribution – Unsymmetrical Sections

Equation 6.5.1-1 is valid only for beams which bend about the principal axes of the cross section, namely, symmetric sections. If the beam does not have an axis of symmetry, the following equations are used to determine the shear stresses acting on the beam cross section. Note that Equation 6.5.1-1 is valid if bending is restrained, such as the case where an unsymmetrical stiffener is attached to the skin. Figure 6.5.2-1 illustrates the geometry and sign conventions for analysis of an unsymmetrical section.

This method is based on the equations for bending stress in unsymmetrical sections. Reference 6-29 and other sources refer to this calculation of shear stress in unsymmetrical sections as the “k method”.

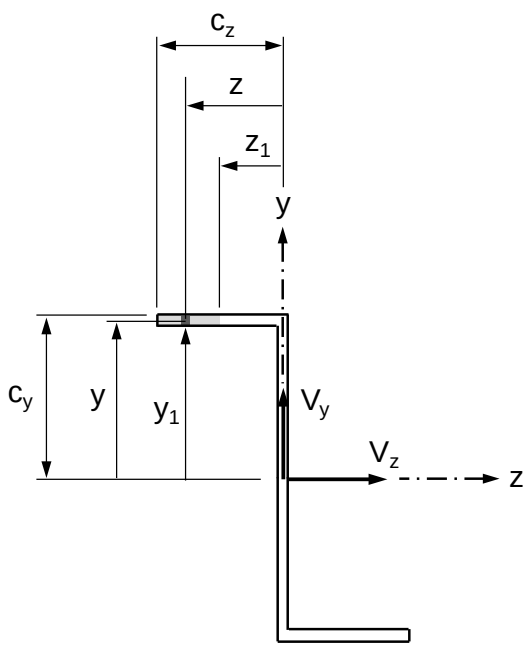

Figure 6.5.2-1 Sign Convention – Shear Loading Acting on an Unsymmetrical Section

(Note that the y and z axes intersect at the cross section centroid)

Copyright 2016 Lockheed Martin Corporation.
Note: The current version is always the version on the Lockheed Martin network

The shear flow in an unsymmetrical section is given by:

$$q = (K_1V_y - K_3V_z)Q_y + (K_1V_z - K_2V_y)Q_z$$ **Equation 6.5.2-1**

The shear stress in an unsymmetrical section is given by:

$$f_s = \frac{q}{t} = \frac{(K_1V_y - K_3V_z)Q_y + (K_1V_z - K_2V_y)Q_z}{t}$$ **Equation 6.5.2-2**

$$K_1 = \frac{I_{yz}}{I_yI_z - (I_{yz})^2}$$

$$K_2 = \frac{I_y}{I_yI_z - (I_{yz})^2}$$

$$K_3 = \frac{I_z}{I_yI_z - (I_{yz})^2}$$

$$Q_y = \int_{z_1}^{c_z} z dA$$

$$Q_z = \int_{y_1}^{c_y} y dA$$

Where:
f_s is the shear stress (psi) at the analysis location
q is the shear flow (lb/in) at the analysis location
V_y and V_z are the beam applied shear loads in the y and z directions (lb)
t is the thickness (or width) of the cross section at the analysis location (in)
y and z are the distances from the z and y axes to the element dA (in)
Q_y is the first area moment about the y axis for the portion above z_1 (in^4)
Q_z is the first area moment about the z axis for the portion above y_1 (in^4)
I_y and I_z are the section moments of inertia about the y and z centroidal axes (in^4)
I_{yz} is the product of inertia about the y and z centroidal axes (in^4)

Using the shear stress, the margin of safety is calculated using the material ultimate shear strength and Equation 6.5.1-2:

$$M.S. = \frac{F_{su}}{f_s} - 1$$

Where:
F_{su} is the shear ultimate material property (psi)
f_s is the applied shear stress (psi)

Copyright 2016 Lockheed Martin Corporation.
Note: The current version is always the version on the Lockheed Martin network

6.5.2.1 Example Calculation - Horizontal Shear Stress in an Unsymmetrical Beam

Given: The loads shown at right are applied through the shear center of the Zee section. Determine the horizontal shear stresses at Points A and B. Calculate the minimum Margin of Safety in shear at room temperature. I_y = 0.0574 in^4 I_z = 0.6035 in^4 I_{yz} = -0.1305 in^4 **Material:** Aluminum 7050-T74511 Extrusion F_{tu} = 71,000 psi, F_{ty} = 60,000 psi, F_{su}=38,000 psi E= 10.3x10^6 psi	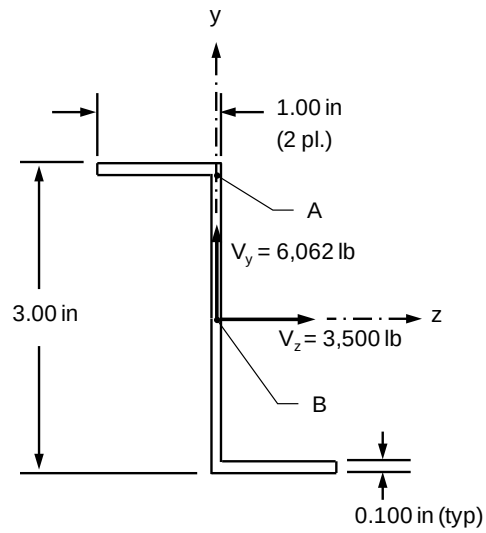
Solution Step	**Calculation**
Calculate the factors for use in Equation 6.5.2-1.	$K_1 = \frac{I_{yz}}{I_y I_z - (I_{yz})^2} = \frac{-0.1305\ in^4}{(0.0574\ in^4)(0.6035\ in^4) - (-0.1305\ in^4)^2} = -7.410$ $K_2 = \frac{I_y}{I_y I_z - (I_{yz})^2} = \frac{0.0574\ in^4}{(0.0574\ in^4)(0.6035\ in^4) - (-0.1305\ in^4)^2} = 3.259$ $K_3 = \frac{I_z}{I_y I_z - (I_{yz})^2} = \frac{0.6035\ in^4}{(0.0574\ in^4)(0.6035\ in^4) - (-0.1305\ in^4)^2} = 34.268$
Determine the shear flow distribution (Equation 6.5.2-1) written in terms of the first area moments.	$q = (K_1 V_y - K_3 V_z) Q_y + (K_1 V_z - K_2 V_y) Q_z$ $q = (-7.410 \times 6{,}062\ lb - 34.268 \times 3{,}500\ lb) Q_y$ $+(-7.410 \times 3{,}500\ lb - 3.259 \times 6{,}062\ lb) Q_z$ $q = -164{,}857\ Q_y - 45{,}691\ Q_z$
Determine the first area moments and shear stress at Point A using Equation 6.5.2-2.	$Q_y = \int_{z_1}^{c_z} z dA = \left[-(\frac{1.00\ in}{2} - 0.05\ in)\right](1.00\ in)(0.10\ in) = -0.045\ in^3$ $Q_z = \int_{y_1}^{c_y} y dA = (1.50\ in - 0.05\ in)(1.00\ in)(0.10\ in) = 0.145\ in^3$ $q = -164{,}857\ Q_y - 45{,}691\ Q_z$ $q = -164{,}857\ lb/in^4\ (-0.045\ in^3) - 45{,}691\ lb/in^4\ (0.145\ in^3) = 793\ lb/in$ $f_s = \frac{q}{t} = \frac{793\ lb/in}{0.100\ in} = 7{,}930$ psi

Copyright 2016 Lockheed Martin Corporation.
Note: The current version is always the version on the Lockheed Martin network

Determine the first area moments and shear stress at Point B using Equation 6.5.2-2.	$Q_y = \int_{z_1}^{c_z} z dA = -0.045\ in^3$ $Q_z = \int_{y_1}^{c_y} y dA = 0.145\ in^3 + \frac{(1.50\ in - 0.10\ in)}{2}(1.50\ in - 0.10\ in)(0.10\ in)$ $= 0.243\ in^3$ $q\ =\ -164{,}857\ Q_y - 45{,}691\ Q_z$ $q\ = -164{,}857\ \ lb/in^4\ (-0.045\ in^3) - 45{,}691\ \ lb/in^4\ (0.243\ in^3)$ $q\ = -3{,}684\ lb/in$ $f_s\ =\ \frac{q}{t} = \frac{3{,}684\ lb/in}{0.100\ in} = 36{,}840$ psi
Calculate the Margin of Safety in Shear at Point B using Equation 6.5.1-2.	$MS_{ULT}\ =\ \frac{F_{su}}{f_s} - 1 = \frac{38{,}000\ psi}{36{,}840\ psi} - 1\ =\ +\underline{0.03}$
The shear stress distribution on the cross section is as shown:	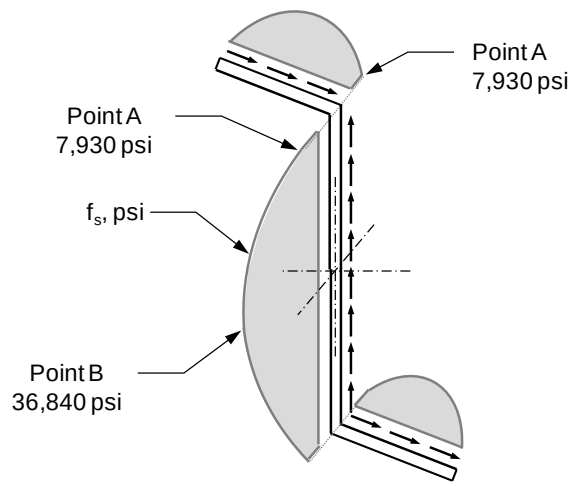

6.5.3 Shear Flow Distribution – Thin-Walled Open Sections

It is often necessary to determine the shear stress distribution across the width of a flange or along the perimeter of a closed section. When written in terms of the shear flow, q (lb/in), Equation 6.5.1-1 may be used to accomplish this. It is assumed that the flange is sufficiently thin such that the shear stresses are uniform through the thickness. Consider a portion of a cantilever beam consisting of an I-section as shown in Figure 6.5.3-1.

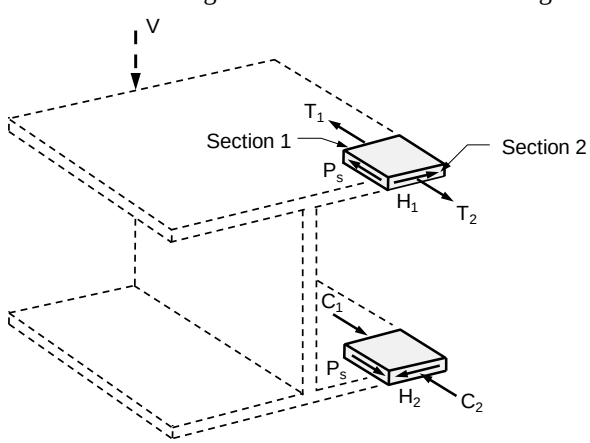

Figure 6.5.3-1 Lateral Forces H_1 and H_2 Developed in the Flanges of an I-section Cantilever Beam

Copyright 2016 Lockheed Martin Corporation.
Note: The current version is always the version on the Lockheed Martin network

As in Section 6.5.1, the horizontal shear load, P_s, may be developed through equilibrium consideration of the beam flanges. The horizontal shear load acting on a flange element is the difference between the loads due to bending at two stations, *e.g.*, T_1 and T_2 on the upper flange. To preserve moment equilibrium in the flange element, lateral forces H_1 and H_2 must act at Sections 1 and 2 as shown in Figure 6.5.3-1. Note that the shear stress is zero at the free edge of the flange. The shear flow distribution along the length of an I-section or channel section beam is given by Equation 6.5.3-1. The geometry is shown in Figure 6.5.3-2.

$$q = \frac{V}{I}Q = \frac{V}{I}(t)(z_f)y$$

$$q = \left(\frac{Vht}{2I}\right)z_f \qquad \textbf{Equation 6.5.3-1}$$

$$f_s = \frac{q}{t}$$

Where:
q is the flange shear flow (lb)
f_s is the shear stress (psi)
V is the beam shear load (lb)
Q is the first area moment for the portion of the flange at the analysis location (in^3)
I is the moment of inertia of the entire cross section (in^4)
t is the flange thickness at the analysis location (in), per Figure 6.5.3-2
z_f is the distance from flange edge to the analysis location (in), per Figure 6.5.3-2
y is the distance from the neutral axis to the flange centerline, (in) per Figure 6.5.3-2
h is the section height measured between flange centerlines, (in) per Figure 6.5.3-2

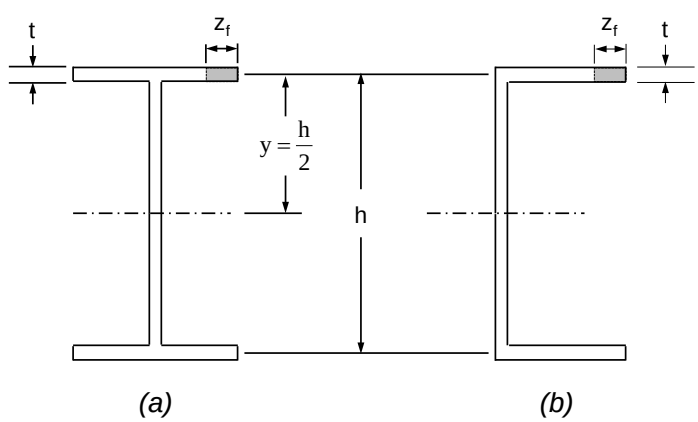

Figure 6.5.3-2 Reference Dimensions for use with Equation 6.5.3-1

The use of Equation 6.5.3-1 for channel and I-section beams results in the shear flow distributions shown in Figure 6.5.3-3. It is assumed that the resultant load is applied to the channel section through the shear center.

Copyright 2016 Lockheed Martin Corporation.
Note: The current version is always the version on the Lockheed Martin network

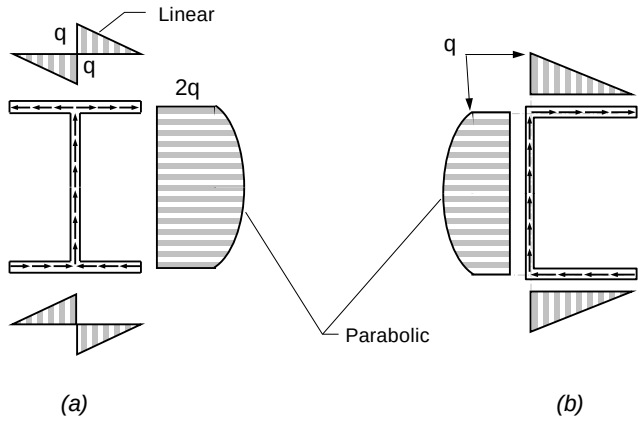

Figure 6.5.3-3 Shear Flow Distribution for I–Section and Channel Section Beams

Further discussion of this material, can be found in Reference 6-8 or other strength of materials texts.

Note that for a beam to bend without twist, the load must be applied in a plane of symmetry for the cross section. If this is not the case (as with the channel section of Figure 6.5.3-3 b) the shear center of the cross section must be determined to eliminate torsion. Shear Center equations for various cross sections are presented in Section 4.2.7.

6.5.4 Shear Flow Distribution – Thin-Walled Closed Sections

In a manner similar to Section 6.5.3, Equation 6.5.1-1 may be used to obtain the shear flow distribution for closed sections. In fuselage stress analyses, it is frequently required to determine the shear flow distribution in a thin-walled circular tube. The equations to approximate these shear flows are presented in this section.

The tube walls must be sufficiently thin such that uniform shear stresses through the thickness may be assumed. This is a valid assumption for tubes where $R/t \geq 5.5$, as discussed in Section 4.2.6.

Consider a cantilever beam consisting of a circular tube section as shown in Figure 6.5.4-1.

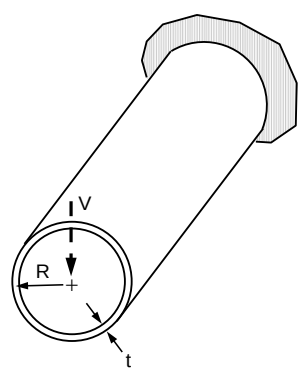

Figure 6.5.4-1 Cantilever Tube Applied Loading and Reference Dimensions

Beginning with Equation 6.5.1-1, written in terms of the shear flow:

$$q = \frac{V}{I} Q$$

Copyright 2016 Lockheed Martin Corporation.
Note: The current version is always the version on the Lockheed Martin network

For thin tubes, the polar moment of inertia, I_p, may be approximated using the assumption that the entire cross-sectional area is concentrated a distance R from the center of the tube. I_p is therefore the product of this approximate area and square of the mean radius, R. For a circular tube, since $I_p = 2\pi R^3 t = I_y + I_z$:

$$I_y = I_z = I_p/2 = \pi R^3 t$$

For the segment shown in Figure 6.5.4-2, $y = R cos\theta$ and $dA = Rtd\emptyset$
The area moment, Q, for the segment about the y axis is:

$$Q = \int ydA = \int_0^{\varphi} (Rcos\theta)(Rtd\emptyset) = \int_0^{\varphi} R^2 t\, cos\theta d\emptyset$$
$$Q = R^2 t\, sin\emptyset$$

The shear flow distribution along the perimeter of the cantilever tube is given by Equation 6.5.4-1 and illustrated in Figure 6.5.4-2. Note the shear flow is zero along the load line.

$$q = \frac{V}{I} Q = \frac{V}{\pi R^3 t} R^2 t\, sin\phi$$
$$q = \frac{V}{\pi R} sin\phi \qquad \textbf{Equation 6.5.4-1}$$
$$f_s = \frac{q}{t}$$

Where:
q is the flange shear flow (lb)
f_s is the shear stress (psi)
V is the beam shear load (lb)
Q is the first area moment for the portion of the tube at the analysis location (in^3)
I is the moment of inertia of the entire cross section (in^4)
R is the tube mean radius, in
t is the tube thickness at the analysis location (in), per Figure 6.5.3-2
ϕ is the angle from the load line to the analysis location, radians

The maximum shear stress occurs at $\phi = \pi / 2$ radians. At this location the shear flow is:

$$q = \frac{V}{\pi R}$$

The shear flow given Equation 6.5.4-1 is due to direct shear only and any shear flows due to torsion must be superimposed. Note that thickness variations in the fuselage skins do not affect the magnitude of the shear flow.

Further discussion of this material can be found in Reference 6-28 or several strength of material texts.

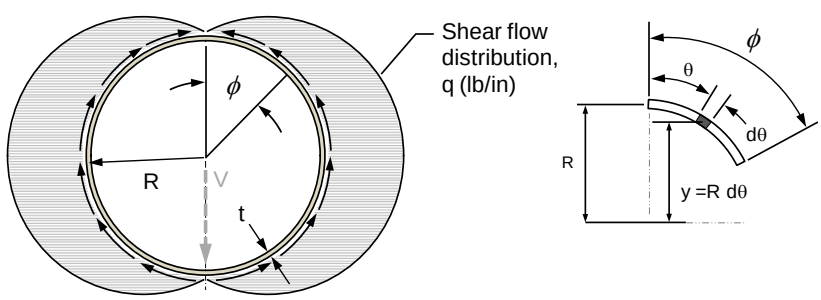

Figure 6.5.4-2 Shear Flow Distribution for Cantilever Tube

Copyright 2016 Lockheed Martin Corporation.
Note: The current version is always the version on the Lockheed Martin network

6.5.5 Shear Flow Distribution – Webs Ineffective in Bending

In stiffened thin-sheet (semimonocoque) aircraft structure, it is often assumed that beam webs transfer shear only. This assumption is based on the fact that, while thin webs efficiently transfer shear and tension loads, compression results in buckling at low levels. The compression loads must usually be carried by the beam stiffening members only, which also serve to distribute concentrated loads along their length to the beam webs. This is shown in the free-body diagram of Figure 6.5.5-1.

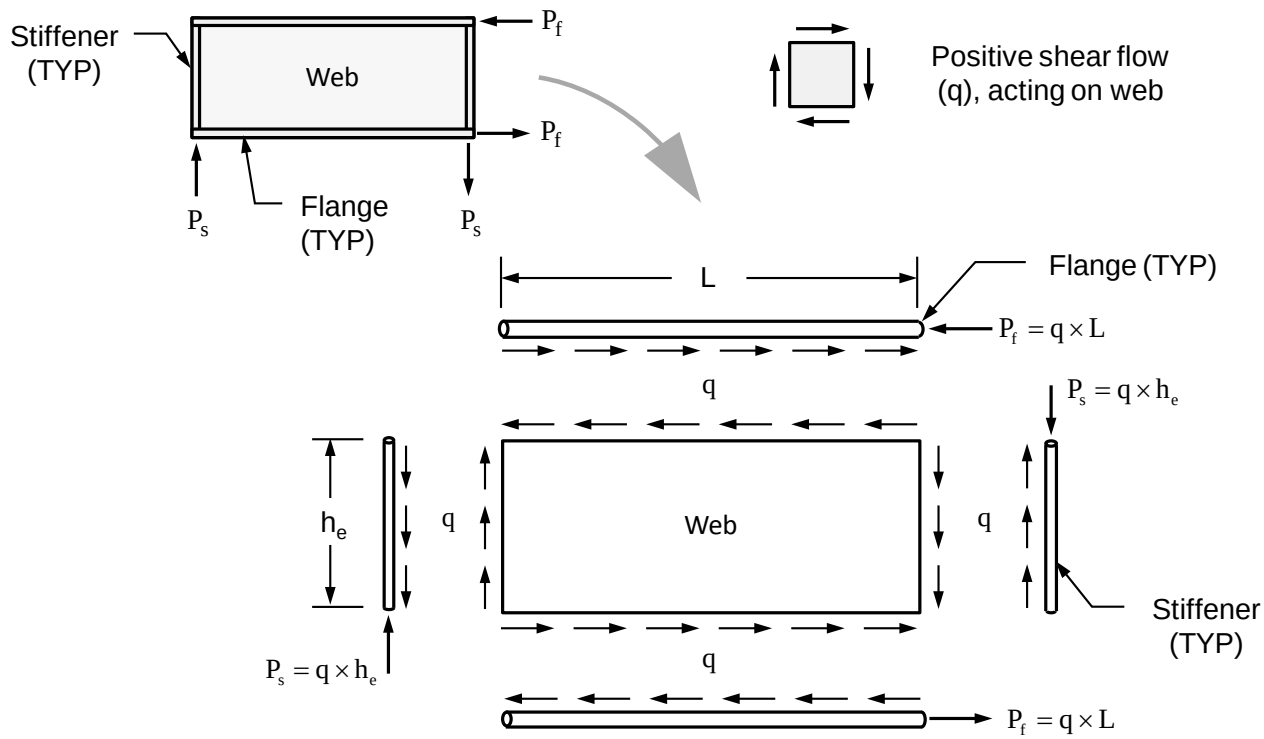

Figure 6.5.5-1 Thin-Sheet Cantilever Beam Free-Body

In this section, thin webs are assumed to transfer in-plane shear loads only. In actuality, thin webs may buckle in shear, introducing secondary tension field loads in addition to the primary shear loading. As shown in Section 6.6, the tension field stresses are superimposed directly to those calculated here. Thus, the methods presented in this section remain valid for obtaining the shear distribution in tension field webs.

To determine the internal load distribution in thin-sheet structure, the following are assumed:

1. The thin-sheet panel carries all shear loads.
2. Longitudinal members (flanges, stringers, etc…) carry all axial loads which act at the member centroid.
3. Any change in axial load to a longitudinal member is due to an externally applied load or shear load build-up only.
4. Shear flow in a rectangular panel is constant unless there is an intermediate load applied to a bounding member. Note that shear flow in tapered panels is not constant. This is discussed in Section 6.5.6.

The thin sheet beam idealization is shown in Figure 6.5.5-2. The shear flow and shear stress in a thin rectangular web is given by:

$$q = \frac{V}{h_e}$$ **Equation 6.5.5-1**

Copyright 2016 Lockheed Martin Corporation.
Note: The current version is always the version on the Lockheed Martin network

$$f_s = \frac{q}{t}$$

Where:
q is the web shear flow (lb)
f_s is the shear stress (psi)
V is the beam shear load (lb)
h_e is the beam height between flange centroids (in), per Figure 6.5.5-2
t is the web thickness at the analysis location (in), per Figure 6.5.5-2

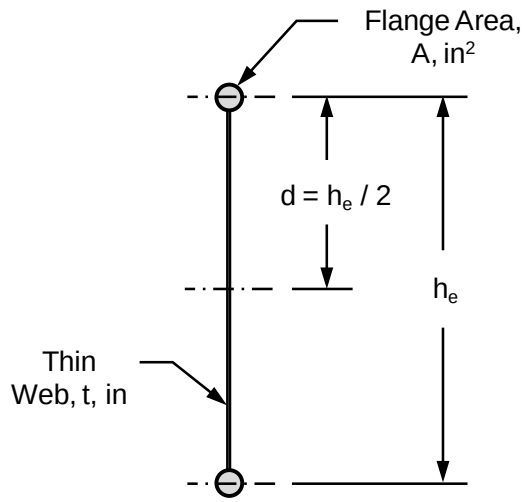

Figure 6.5.5-2 Thin-Sheet Beam Idealization

Note that Equation 6.5.5-1 can be derived through use of Equation 6.5.1-1:

The first area moment about the neutral axis is:

$$Q = Ad = A\frac{h_e}{2}$$

The moment of inertia about the neutral axis is:

$$I = 2Ad^2 = A\frac{h_e^2}{2}$$

The web shear flow is then obtained in the form of Equation 6.5.5-1:

$$q = f_s \times t = \frac{VQ}{It} \times t = \frac{2VAh_e}{2Ah_e^2} = \frac{V}{h_e}$$

The generalized free-body diagram for a thin-sheet cantilever beam is shown Figure 6.5.5-1. Note that the shear flow is constant along all edges of the rectangular panel.

The internal load distribution for a simple thin-sheet beam is presented in Example 6.5.5.1.

Copyright 2016 Lockheed Martin Corporation.
Note: The current version is always the version on the Lockheed Martin network

6.5.5.1 Example Calculation – Internal Load Distribution in a Thin-Sheet Beam

Given:
The idealized rib shown acts as a simply supported beam.
Assume:

1. The rib webs transfer shear only and that they are stable for the loading shown.
2. All axial loads are carried by the flanges and stiffeners.
3. The axial loads act through the centroids of the flanges and stiffeners.

Determine the internal load distribution for the beam and plot the axial load diagrams for the upper flange and Stiffener A-B.

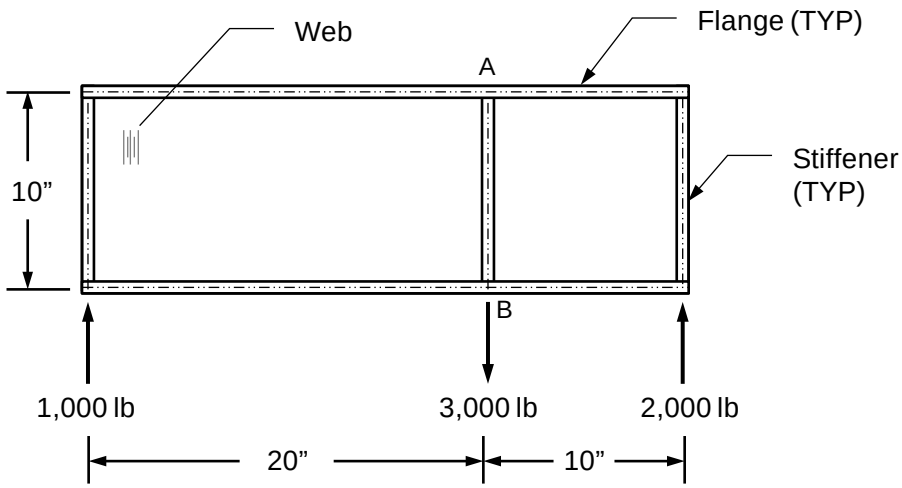

Solution Step	Calculation
Determine the shear flows in the rib webs using Equation 6.5.5-1.	Left panel: $q = \frac{V}{h_e} = \frac{1000\ lb}{10\ in} = 100\ lb/in$ Right panel : $q = \frac{V}{h_e} = \frac{2000\ lb}{10\ in} = 200\ lb/in$ These shear flows are shown in Figure A.
Determine the loads acting on the flanges and stiffeners using the rib free-body and shear flows calculated above.	Loads acting on upper flange (Lower flange is similar): $\Sigma F_H = 0: (100\ lb/in)(20\ in) - (200\ lb/in)(10\ in) = 0$ Loads acting on left stiffener (Right stiffener calculation is similar, using 2000 lb reaction): $\Sigma F_V = 0: 1000\ lb - (100\ lb/in)(10\ in) = 0$ Loads acting on Stiffener A-B: $\Sigma F_V = 0: 3000\ lb - (100\ lb/in + 200\ lb/in)(10\ in) = 0$ These loads are shown in Figure B. Note that the loads acting on the flanges and stiffeners are equal and opposite to the loads acting on the webs.

Copyright 2016 Lockheed Martin Corporation.
Note: The current version is always the version on the Lockheed Martin network

Show the free-body loads acting on each member using the loads calculated above.

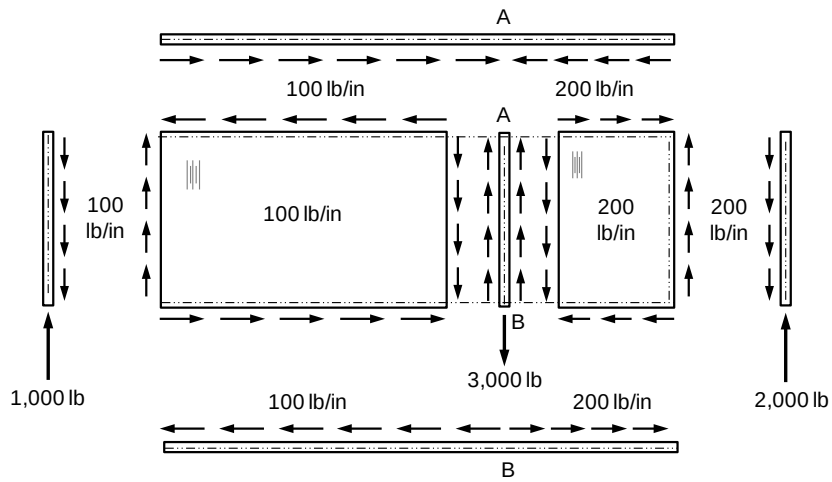

Figure A : Beam Free-Body Diagram

Plot the axial load diagrams for the upper flange and Stiffener A-B.

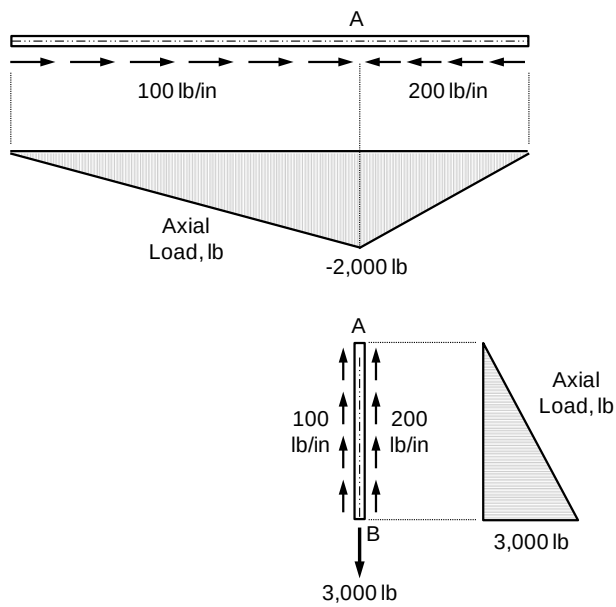

Figure B : Loads Acting on Upper Flange and Stiffener

The flange loads may alternatively be obtained through calculation of the beam bending stress. This is shown for illustration only.

The beam moment of inertia is idealized as shown in Figure 6.5.5-1, where the web is considered ineffective in resisting bending.

Assume flange areas are 1 in^2 :

$$I = \frac{Ah_e^2}{2} = \frac{1.0\ in^2(10\ in)^2}{2} = 50\ in^4$$

Bending moment at Point A: $M = 1{,}000\ lb(20\ in) = 20{,}000\ in\text{-}lb$

Bending stress at Point A:

$$f_b = \frac{Mc}{I} = \frac{-20{,}000\ in\text{-}lb(5\ in)}{50\ in^4} = -2{,}000\ psi$$

Axial load at Point A: $P = f_b A = -2{,}000\ psi(1.0\ in^2) = -2{,}000\ lb$

Copyright 2016 Lockheed Martin Corporation.
Note: The current version is always the version on the Lockheed Martin network

6.5.6 Shear Flow Distribution – Tapered Beams

Most aircraft beams have some degree of taper, which results from the need to achieve a minimum weight design. In the case of a cantilever beam, the taper allows for an increase in the beam moment of inertia with increasing bending moment. This makes it possible to achieve constant bending stresses at any beam station.

Although variation in the beam cross section may not result in appreciable error when using the beam flexure formula of Equation 6.2.2-1, calculation of beam shear stresses through the use of Equation 6.5.1-1 may be considerably in error. This occurs because a portion of the applied vertical shear load is carried by the non-parallel beam flanges. To determine the web shear flow in a tapered beam, the portion of the applied shear load carried by the web itself is used in the shear flow calculation. The web shear portion is obtained through statics, accounting for the geometric taper of the beam. Consider the cantilever beam idealization shown in Figure 6.5.6-1.

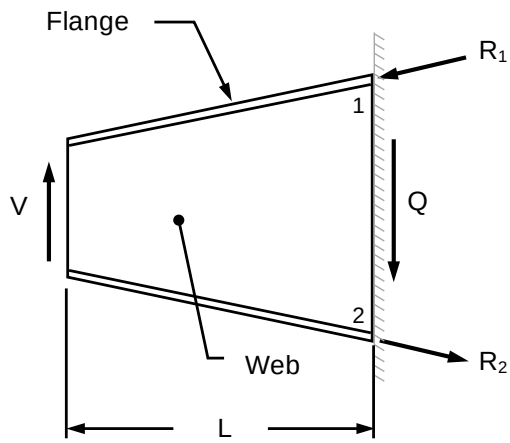

Figure 6.5.6-1 Thin-Sheet Cantilever Beam with Taper

The vertical web shear (Q) can be determined at any station by summing forces acting on the section as shown in Figure 6.5.6-2

Copyright 2016 Lockheed Martin Corporation.
Note: The current version is always the version on the Lockheed Martin network

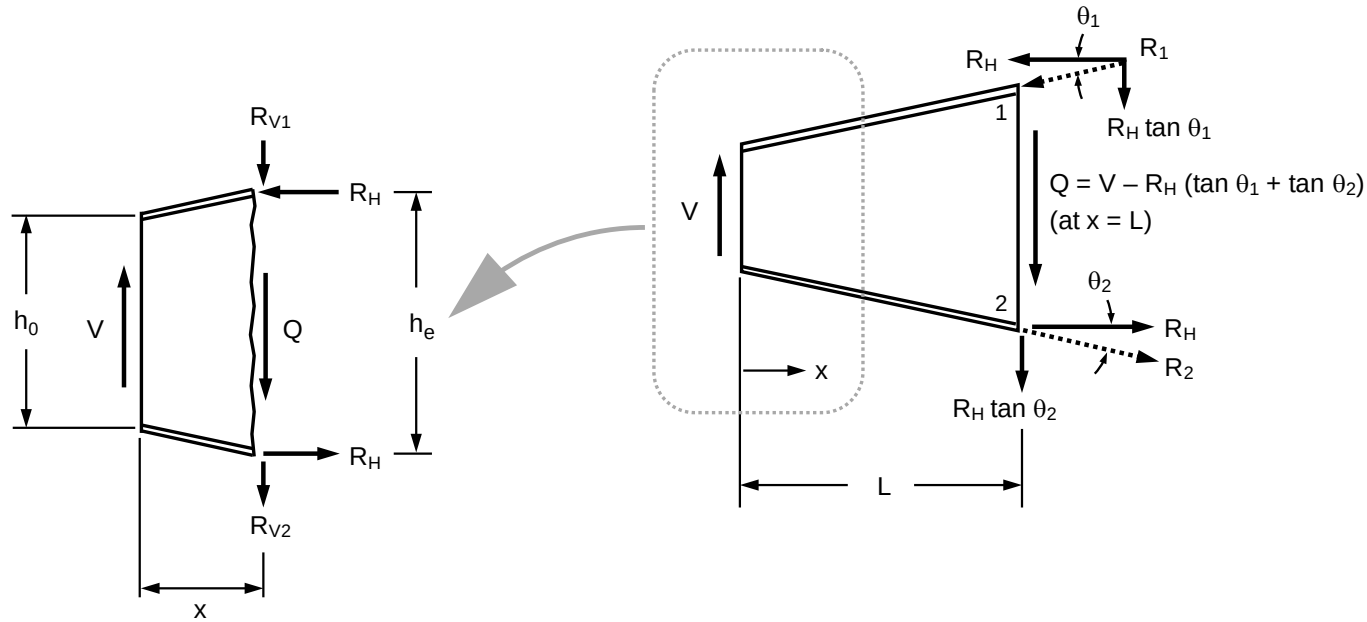

Figure 6.5.6-2 Tapered Cantilever Beam Free-Body

By summing moments at any station (x), the horizontal component of the flange reaction is determined:

$$R_H = V\frac{x}{h_e}$$

The vertical components of the flange reactions are:

$$R_{V1} = V\frac{x}{h_e}tan\ \theta_1$$

$$R_{V2} = V\frac{x}{h_e}tan\ \theta_2$$

Note that R_{V1} is only equal to R_{V2} if θ_1 is equal to θ_2.

The vertical shear load acting on the web at any station (x) is obtained by summing vertical forces on the beam section:

$$Q = V\left[1 - \frac{x}{h_e}(tan\ \theta_1 + tan\ \theta_2)\right] \qquad \textbf{Equation 6.5.6-1}$$

It can be shown that the web vertical shear load at any station may also be written as:

$$Q = V\frac{h_0}{h_e} \qquad \textbf{Equation 6.5.6-2}$$

The shear flow at any station is similar to Equation 6.5.5-1for the the beam without taper:

$$q = \frac{Q}{h_e} \qquad \textbf{Equation 6.5.6-3}$$

The shear flow at any station may also be written in terms of the shear flow at x=0, denoted by q_0:

$$q = q_0\left(\frac{h_0}{h_e}\right)^2$$

Copyright 2016 Lockheed Martin Corporation.
Note: The current version is always the version on the Lockheed Martin network

It is often necessary to obtain the average shear flow in a tapered web to perform stability analyses. The average web vertical shear load over a length x is given by:

$$Q_{av} = \frac{V + Q}{2}$$ **Equation 6.5.6-4**

The geometry and shear flow of a tapered web is shown in Figure 6.5.6-3. The average panel height, h_{av}, is taken ast mid-bay and is measured between flange centroids:

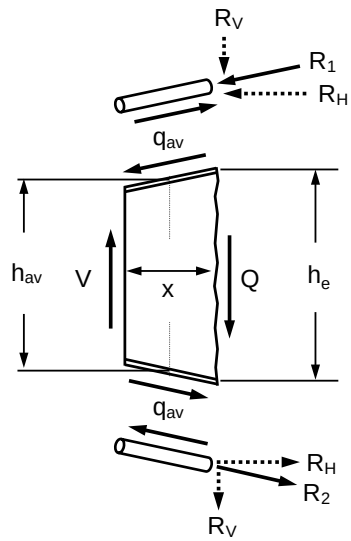

Figure 6.5.6-3 Tapered Panel Average Shear Flow

The average shear flow over a length x is shown below.

$$q_{av} = \frac{Q_{av}}{h_{av}}$$ **Equation 6.5.6-5**

Note that the web vertical shear load and resulting shear flow distributions in a cantilever beam do not vary linearly along its length. A sample shear flow distribution for a cantilever beam with flange taper angles of 15 degrees is shown in Figure 6.5.6-4. Because of the non-linear distribution, the average shear flow for the entire web, given in Equation 6.5.6-5 is not the same as the shear flow calculated at the beam mid-span.

Tapered Web Shear Flow vs. Beam Length

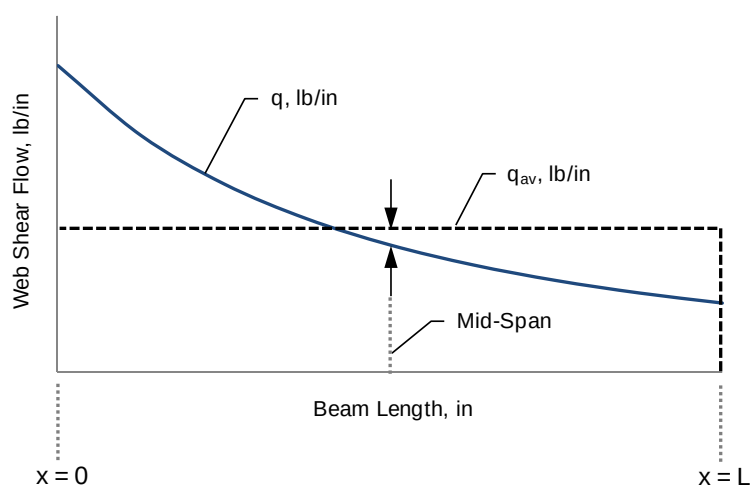

Figure 6.5.6-4 Tapered Panel Shear Flow Distribution

Copyright 2016 Lockheed Martin Corporation.
Note: The current version is always the version on the Lockheed Martin network

Further discussion of this material can be found in Reference 6-28.

A sample calculation of web shear flow in a tapered beam is shown in Example 6.5.6.1. Beam web strength analyses using the methods developed in this section are shown in Section 6.6.

6.5.6.1 Example Calculation – Internal Load Distribution in a Thin-Sheet Tapered Beam

Given:
The idealized rib shown acts as a cantilever beam.
Assume:
1. The rib webs transfer shear only and that they are stable for the loading shown.
2. All axial loads are carried by the flanges and stiffeners.
3. The axial loads act through the centroids of the flanges and stiffeners.

Determine:
1. The internal load distribution for the beam.
2. The web shear flow as a function of beam length.
3. The average web shear flows for the forward and aft panels.

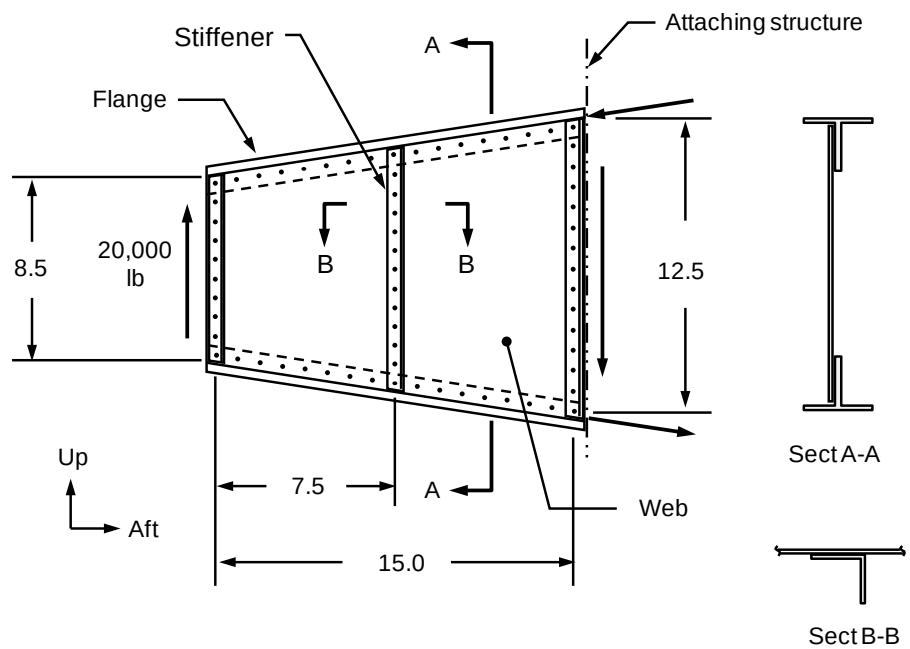

Solution Step	Calculation
Using the beam geometry, determine the upper and lower flange taper angles.	$\theta_1 = \theta_2 = arctan\left[\frac{(12.5\ in - 8.5\ in)/2}{15.0\ in}\right] = 7.59°$

Copyright 2016 Lockheed Martin Corporation.
Note: The current version is always the version on the Lockheed Martin network

	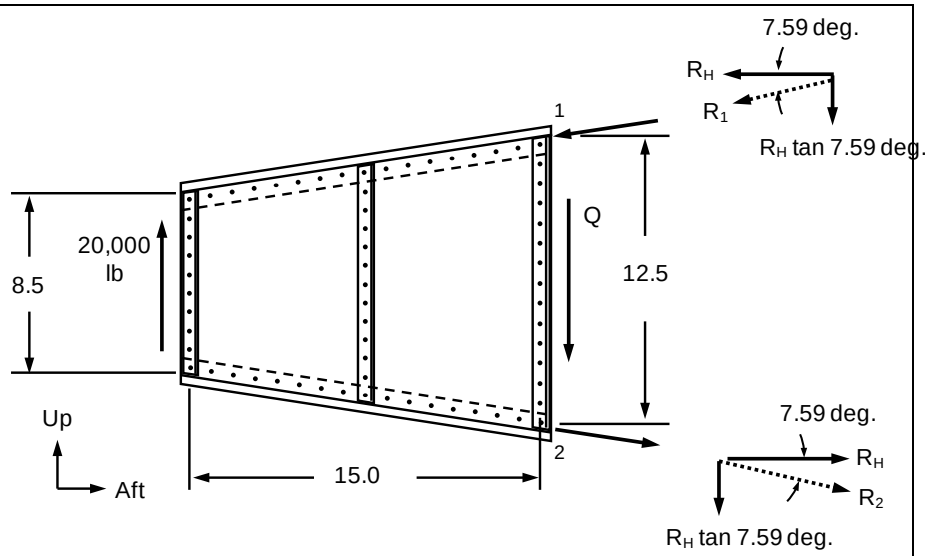
Sum moments about Point 1 or 2 to determine R_H (CW is positive). Determine the vertical component and resultant flange reactions.	$\Sigma M_2 = 0$: $(20{,}000\ lb)(15\ in) - 12.5\ R_H = 0$ $R_H = 24{,}000\ lb$ The vertical components of R_1 and R_2 are: $R_V = R_H\ \tan\theta = 24{,}000\ lb(\tan 7.59°) = 3{,}198\ lb$ The resultant flange reactions are : $R_1 = R_2 = \sqrt{[(24{,}000\ lb)^2 + (3{,}198\ lb)^2]} = 24{,}212\ lb$
Sum forces to determine the web shear (Q) at the beam aft edge (i.e., the beam reaction point).	$\Sigma F_V = 0$: $20{,}000\ lb - 2(24{,}000\ lb)(\tan 7.59°) - Q = 0$ $Q = 13{,}604\ lb$
Show the free-body diagrams for the web and flanges. Note that the stiffeners are for panel stability only and are included in the web free-body.	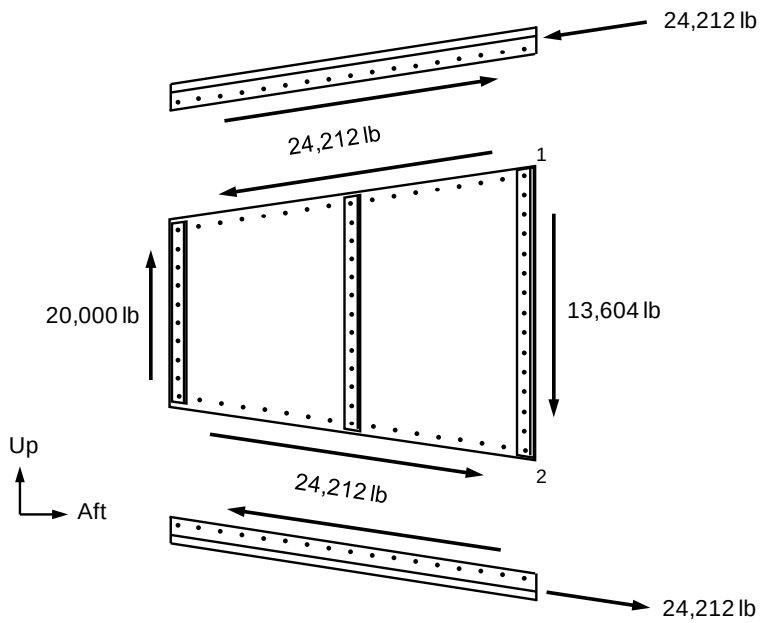

Copyright 2016 Lockheed Martin Corporation.
Note: The current version is always the version on the Lockheed Martin network

Check overall web balance (Positive is Up, Aft and CW):

$\Sigma F_H = 0$: $-(24{,}212\ lb)(\cos 7.59°) + (24{,}212\ lb)(\cos 7.59°) = 0$

$\Sigma F_V = 0$: $20{,}000\ lb - 2(24{,}212\ lb)(\sin 7.59°) - 13{,}604\ lb = 0$

$\Sigma M_2 = 0$: $20{,}000\ lb(15.0\ in) - (24{,}212\ lb)(\cos 7.59°)(12.5\ in) \cong 0$

Note that the average shear flow for the entire panel is calculated as shown using Equations 6.5.6-4 and 6.5.6-5:

$$Q_{av} = \frac{V + Q}{2} = \frac{20{,}000\ lb + 13{,}600\ lb}{2} = 16{,}800\ lb$$

$$q_{av} = \frac{Q_{av}}{h_{av}} = \frac{16{,}800\ lb}{10.5\ in} = 1{,}600\ lb/in$$

Or, alternatively using the web-to-flange shear load of 24,212 lb:

$$q_{av} = \frac{24{,}212\ lb}{15.0\ in/\cos(7.59°)} = 1{,}600\ lb/in$$

Calculate the web vertical shear load and shear flow as a function of beam length.

Sample calculation at the beam mid-span (x=7.50 in) :

Web vertical shear load, Equation 6.5.6-2 :

$$Q = V\frac{h_0}{h_e} = 20{,}000\ lb\left(\frac{8.5\ in}{10.5\ in}\right) = 16{,}190\ lb$$

Web shear flow, Equation 6.5.6-3:

$$q = \frac{Q}{h_e} = \frac{16{,}190\ lb}{10.5\ in} = 1{,}542\ lb/in$$

V= 20,000 lb, h_0 = 7.5 in

x, in	h, in	Q = V (h_0 / h_e), lb	q = Q / h_e, lb/in
0.00	8.5	20,000	2,353
3.75	9.5	17,895	1,884
7.50	10.5	16,190	1,542
11.25	11.5	14,783	1,285
15.00	12.5	13,600	1,088

Copyright 2016 Lockheed Martin Corporation.
Note: The current version is always the version on the Lockheed Martin network

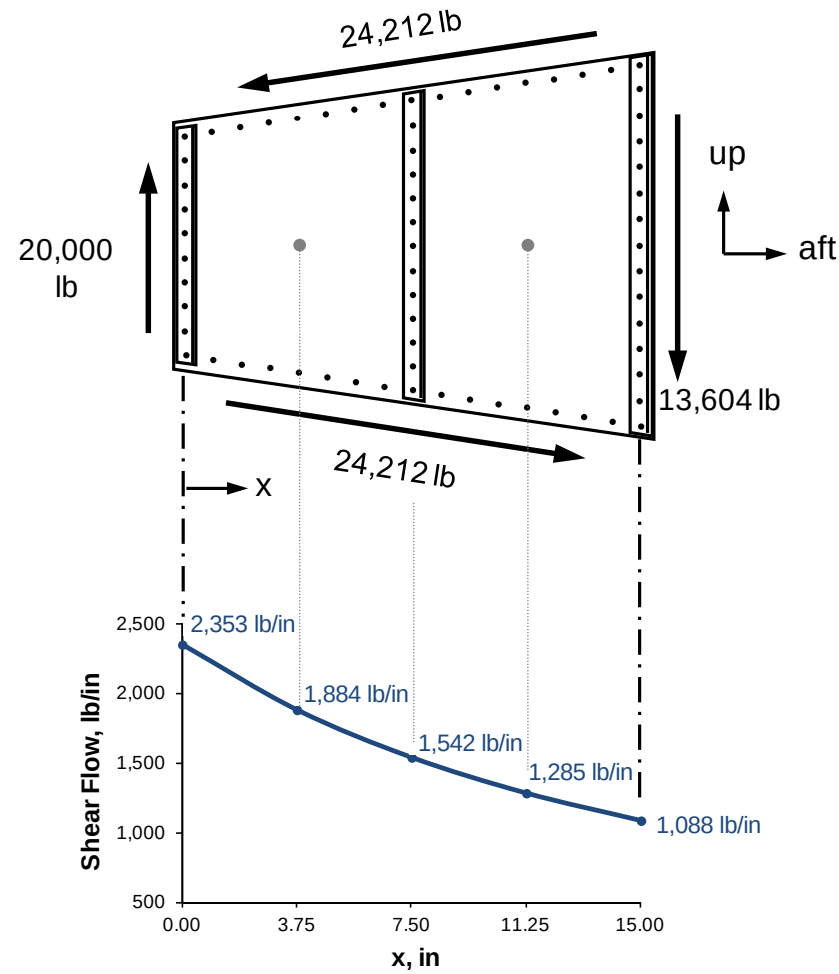

Calculate the average web shear flows for the forward panel. The average web height is 9.5 in.

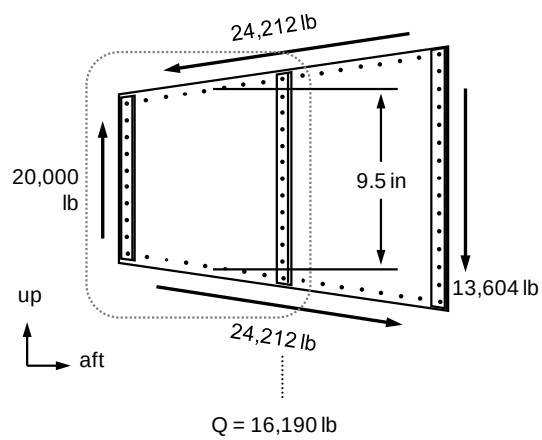

Average vertical shear load, Equation 6.5.6-4:

$$Q_{av} = \frac{V + Q}{2} = \frac{20{,}000\ lb + 16{,}190\ lb}{2} = 18{,}095\ lb$$

Copyright 2016 Lockheed Martin Corporation.
Note: The current version is always the version on the Lockheed Martin network

	Average shear flow, Equation 6.5.6-5: $q_{av} = \frac{Q_{av}}{h_{av}} = \frac{18{,}095\ lb}{9.5\ in} = 1{,}905\ lb/in$
Calculate the average web shear flows for the aft panel. The average web height is 11.5 in.	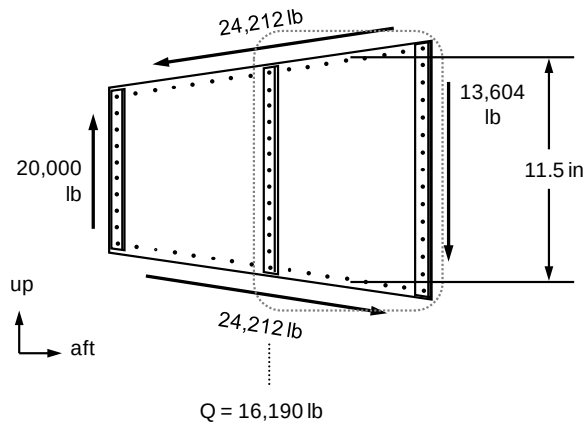 Average vertical shear load, Equation 6.5.6-4: $Q_{av} = \frac{V+Q}{2} = \frac{16{,}190\ lb + 13{,}604\ lb}{2} = 14{,}897\ lb$ Average shear flow, Equation 6.5.6-5: $q_{av} = \frac{Q_{av}}{h_{av}} = \frac{14{,}897\ lb}{11.5\ in} = 1{,}295\ lb/in$
Compare the average shear flows in the forward and aft panels with the values calculated at the center of each bay.	As shown, the differences between the shear flows calculated at mid-bay and the panel averages are not significant in this example. The difference increases with beam taper. 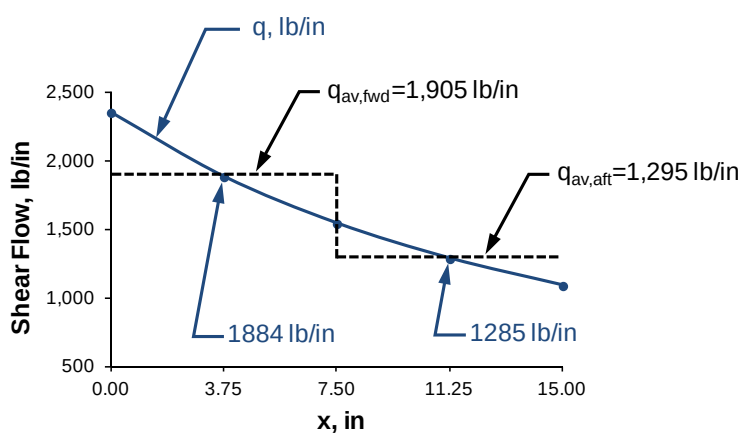

Copyright 2016 Lockheed Martin Corporation.
Note: The current version is always the version on the Lockheed Martin network

6.5.7 Shear Flow Distribution – Thin Sheet Box Beams

The majority of aircraft structural assemblies include some form of box beam in their construction. Wing boxes, tail sections and many fuselage types comprise box beams as the primary structural element, due to their efficiency in resisting loads in all directions. As described in Section 7, closed thin-walled sections are the only weight-efficient configuration to carry torsion loads.

Box beams include single and multiple-cell configurations. Common single-cell examples include circular fuselage sections and any assembly (such as a wing box or tail) consisting of two spars and two closure skins. The skin assemblies may include stringers to assist in carrying the beam bending loads and to increase the skin buckling resistance. An example of a single-cell wing box from a transport aircraft is shown in Figure 6.5.7-1. A configuration with three or more spars is classified as multi-cell. Examples include wing boxes of high speed aircraft, where low thickness-to-chord ratios and multiple spar requirements are common. An example of a multi-cell wing box from a fighter aircraft is shown in Figure 6.5.7-2.

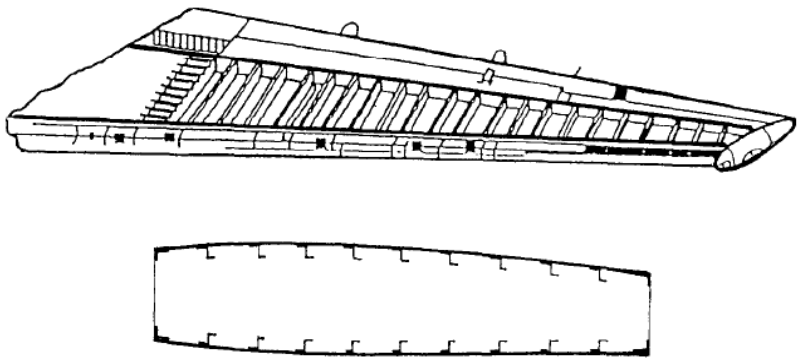

Figure 6.5.7-1 Single-Cell Wing Box - Transport Aircraft

(Reference 6-31)

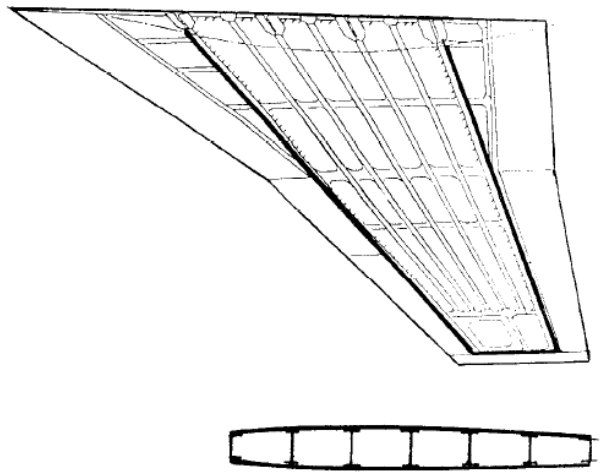

Figure 6.5.7-2 Multi-Cell Wing Box - Fighter Aircraft

(Reference 6-30)

Copyright 2016 Lockheed Martin Corporation.
Note: The current version is always the version on the Lockheed Martin network

The method presented in this section to determine internal load distribution makes the following basic assumptions:

1a) The skins carry shear loads only, written in terms of the shear flow (q) with units lb/in. Skin shear flows result in axial load buildup in the spar caps and stringers, as described in Section 6.5.5.
2a) Since the webs do not resist bending, all beam bending loads are carried as axial loads in the spar caps and stringers. It is common to include an effective width of skin in the cap / stringer areas. This method is described in Section 4.3.
3a) All torsion loads are carried as closed-cell shear flow, namely, $q = T/2A_0$ as given by Equation 7.3.1-3. The cross section is free to warp out of plane, therefore no axial loads in the spar flanges/stringers are created by torsion loads.
4a) The beam shear center is approximated as the cross section centroid at a given beam station.

The limitations of the method presented in this section are:

1b) The skin panels will carry some axial load[1], particularly when loaded in tension. These must be accounted for as necessary in any skin life analyses.
2b) The skins may buckle due to shear loading. Although the ultimate load-carrying capability of the skin greatly exceeds the initial buckling load, the secondary effects due to buckling must be accounted for in the strength analyses. These are developed in Section 6.6.2.
3b) Shear flows in skins containing cutouts or other discontinuities are not treated in this Section.
4b) At root attachments, Assumption (3a) above may be inaccurate due to the inability of the cross section to warp out of plane.

The method developed in this section to determine box beam shear flow is based upon that of Shanley and Cozzone (Reference 6-31), termed the "Unit Method". This procedure may be applied to a wide variety of configurations (with the limitations noted above) and is a sufficient approximation for preliminary sizing. It is recommended that final sizing of the box beam use an appropriate FEM for its internal loads distribution. This recommendation is based on the limitations above, as well as the presence of design details which may be difficult to capture with this method.

6.5.7.1 Internal Load Distribution in a Thin Sheet, Single-Cell Box Beam

The shear flows in a single-cell box include components due to both the externally applied shear and its accompanying torsion. The torsion is created through the shear load transfer from the application point to the beam shear center. The shear load is reacted by both spar webs, the distribution being a function of box geometry and flange / stringer areas. Thus, the load path for the external shear is statically indeterminate. The procedure outlined below allows for the internal load distribution to be determined:

1. Determine the flange / stringer axial loads due to bending.
2. Analytically "cut" a box skin to create a statically determinate open section. Determine the open section shear flows due to the externally applied shear only, neglecting torsion.
3. Sum the torsion moments due to the open section shear flows (from Step 2) assuming a closed torque box.
4. Use the externally applied torsion and the open section torsion (from Step 3) to solve for the unknown shear flow due to torsion imbalance, designated q_0. This torsion results from the shear load transfer to the shear center.
5. Superimpose the open section (Step 2) and torsion imbalance (Step 4) shear flows to determine the final shear flow distribution.

[1] FEM correlation: As this method uses a typical thin-sheet idealization in which the webs carry shear only, it is unlikely that internal loads obtained will closely match a modern FEM. Only in the relatively uncommon case where the box was modeled using NASTRAN CROD and CSHEAR elements would this method provide a high level of correlation with a typical FEM solution.

Copyright 2016 Lockheed Martin Corporation.
Note: The current version is always the version on the Lockheed Martin network

Note that since the webs carry shear only, the flange / stringer axial loads are not affected by this procedure. The shear flow components for a single-cell box beam are shown in Figure 6.5.7-3.
It is noted that this procedure determines the box shear flows without direct calculation of the shear center location. This results in the solution being independent of web thickness, a convenience during the sizing process.

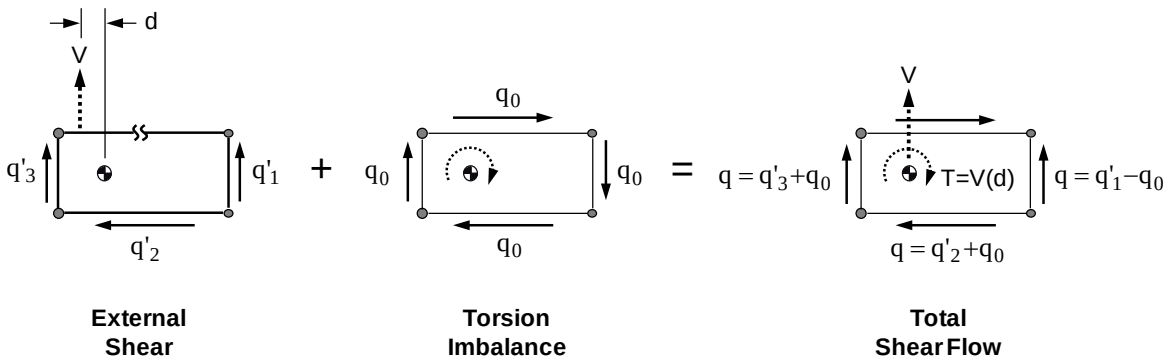

Figure 6.5.7-3 Shear Flow Components for a Single-Cell Box Beam

The analysis procedure is developed in the general case and may be used for single-cell box beams which include any combination of the following:

- Symmetrical or unsymmetrical cross sections
- Planform and/or height taper
- Varying flange / stringer areas at different beam stations, including terminations
- Bending about both axes

The procedure is developed as follows:

1. <u>Flange / Stringer axial loads due to bending</u>: The general form of the bending stress equation is:

$$f_b = \frac{M_x I_{xz} - M_z I_x}{I_x I_z - I_{xz}^2} x + \frac{M_z I_{xz} - M_x I_z}{I_x I_z - I_{xz}^2} z \qquad \textbf{Equation 6.5.7-1}$$

Where:
x and z are the distances from the section centroid to the analysis location (in)
M_x and M_z are the bending moments at the centroid of the cross section (in-lb)
I_x and I_z are the cross section moments of inertia about the x and z axes (in^4)
I_{xz} is the cross section product of inertia about the x and z axes (in^4)

If the cross section has an axis of symmetry, the product of inertia (I_{xz}) is zero and the bending equation reduces to:

$$f_b = -\frac{M_z}{I_z} x - \frac{M_x}{I_x} z \qquad \textbf{Equation 6.5.7-2}$$

Figure 6.5.7-5 showns the bending sign convention for a single-cell box beam.

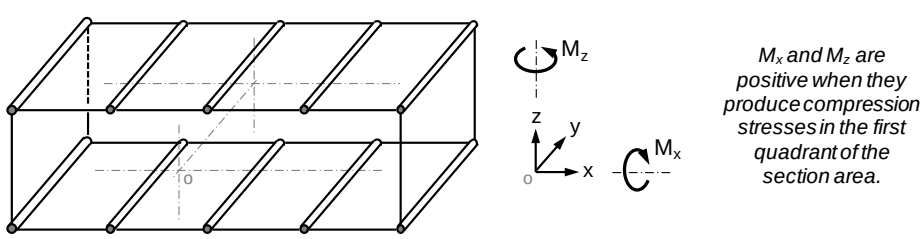

Figure 6.5.7-4 Bending Sign Convention - Single-Cell Box Beam

Copyright 2016 Lockheed Martin Corporation.
Note: The current version is always the version on the Lockheed Martin network

The individual flange / stringer axial loads are:

$$P_i = f_b A_i \qquad \textbf{Equation 6.5.7-3}$$

Where:
P_i is the axial load for the flange / stringer in question
A_i is the cross-sectional area for the flange / stringer in question

2. Open section shear flows due to applied shear load: A panel is "cut" to remove the redundancy in the shear path, creating an open section. The selection of the panel to cut is arbitrary. A summation of span-wise stringer forces is then used to determine the skin shear flows for the open section, designated by q_i. Thus, the individual panel shear flows are simply the accumulation of the shear flows introduced at each successive stringer location. For the box shown in Figure 6.5.7-5:

$$q_i' = \frac{\Delta P_i}{\Delta y}$$

$$q_{i+1}' = \frac{1}{\Delta y}(\Delta P_i + \Delta P_{i+1})$$

$$etc..$$

The open section shear flow in the nth panel is then:

$$q_n' = \frac{1}{\Delta y}\sum_{i=1}^{i=n} \Delta P_i \qquad \textbf{Equation 6.5.7-4}$$

Where:
$q_i', q_{i+1}' \ldots q_n'$ are the skin shear flows for the open box section (lb/in)
ΔP_i, $\Delta P_{i+1} \ldots \Delta P_n$ are the changes in the stringer axial loads due to bending (lb)
Δy is the length of the beam segment under consideration (in)

Figure 6.5.7-5 shows the numbering convention for the stringers and web panels for a single cell box beam and defines positive shear flow.

Convention: The stringers and web panels are numbered in a clockwise sequence from the cut web location. Shear flows are of positive sign when producing a clockwise moment about the y axis on the cross section at y=0. *It is essential that this convention be maintained throughout all analysis steps or significant numerical errors will result.*

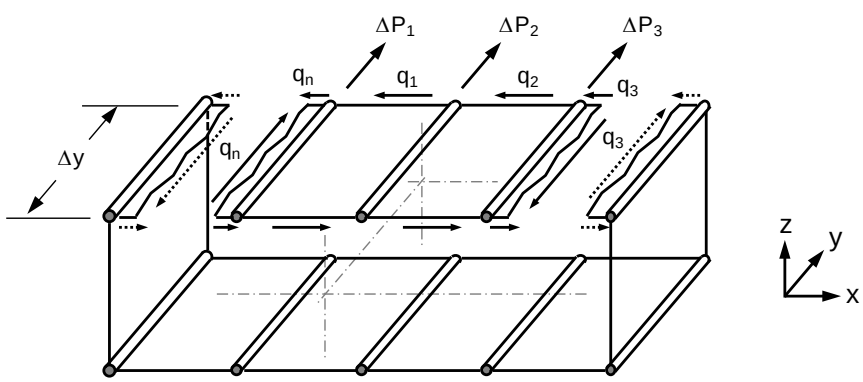

Figure 6.5.7-5 Shear Flow Convention - Single-Cell Box Beam

3. Torsion due to open section shear flows: The shear flows from Step 2 produce torsion on the box section. Assuming the box is closed, *i.e.*, continuity for the cut web is restored, moments are summed through use of Equation 7.3.1-3. The selection of the moment summation point is arbitrary, but the section centroid is used for convenience.

Copyright 2016 Lockheed Martin Corporation.
Note: The current version is always the version on the Lockheed Martin network

Equation 7.3.1-3 is rewritten in terms of the individual shear flows for each portion of the closed cell as shown:

$$q_i' = \frac{T_i^{OS}}{2A_i}$$

Which written in terms of the torsion is:

$$T_i^{OS} = 2A_i q_i' \qquad \textbf{Equation 6.5.7-5}$$

Where:
T_i is the torsion contribution for the ith portion of the cross section, summed about the centroid (in-lb)
q_i' is the skin shear flow for i[th] web of the open box section (lb/in)
A_i is the closed area of the ith portion of the cross section, referenced to the centroid (in^2)

Figure 6.5.7-6 shows the numbering convention for the closed areas within a single cell box beam. Notice the shear flows and areas are numbered clockwise. The location of point "o" is arbitrary but it will be used as the center of the moment summation.

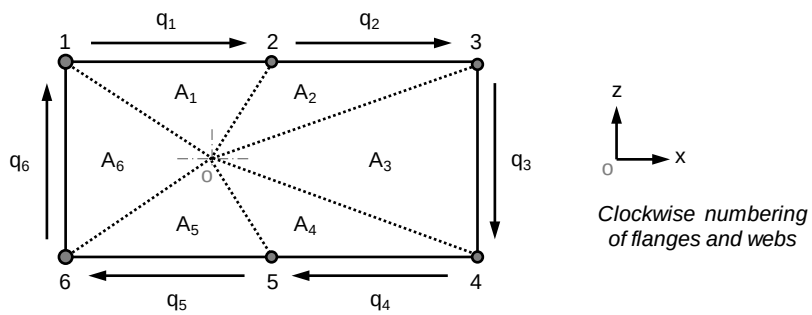

Figure 6.5.7-6 Enclosed Area Convention - Single-Cell Box Beam

4. <u>Solve for the shear flow due to torsion imbalance</u>: Use the externally applied torsion and the open section torsion (from Step 3) to solve for the unknown shear flow due to torsion imbalance, designated q_0. This torsion results from the requirement to maintain equilibrium as the shear load transfers to the shear center. Equating the external torsion to the sum of the open section and imbalanced torsions:

$$T = \Sigma 2Aq_i' + q_0 \Sigma 2A$$

$$q_0 = \frac{T - \Sigma 2Aq_i'}{\Sigma 2A} \qquad \textbf{Equation 6.5.7-6}$$

Where:
q_0 is the shear flow due to torsion imbalance (lb/in), constant for all webs
T is the externally applied torsion on the box (in-lb)
$\Sigma 2A$ is twice the total enclosed area for the torque box (in^2)
$\Sigma 2Aq_i'$ is the total torsion due to skin shear for the open box section (Step 3 above), (in-lb)

5. <u>Superimpose the open section and torsion imbalance shear flows to determine the final shear flow distribution</u>: Combine the individual open section shear flows (q_i' from Step 2) with the torsion imbalance shear flow (q_0 from Step 4) to obtain the final shear flow distribution in the box.

$$q_i = q_i' + q_0 \qquad \textbf{Equation 6.5.7-7}$$

Where:
q_i is the box beam shear flow for the ith web (lb/in)
q_i' is the skin shear flow for i[th] web of the open box section (Step 2 above), (lb/in)
q_0 is the shear flow due to torsion imbalance (lb/in), constant for all webs

This procedure is best accomplished in tabular form. Examples 6.5.7.1.1 through 6.5.7.1.3 illustrate the use of the method.

Copyright 2016 Lockheed Martin Corporation.
Note: The current version is always the version on the Lockheed Martin network

6.5.7.1.1 Example Calculation – Internal Load Distribution in a Thin-Sheet, Single Cell, Symmetric Box Beam

Given:
The idealized box beam shown acts as a cantilever beam. The box is of uniform cross section and symmetric about the horizontal (x) axis

Assume:

1. The rib webs transfer shear only and that they are stable for the loading shown.
2. All axial loads are carried by the flanges and stringers.
3. The axial loads act through the centroids of the flanges and stringers.

Determine the web shear flows for the beam.

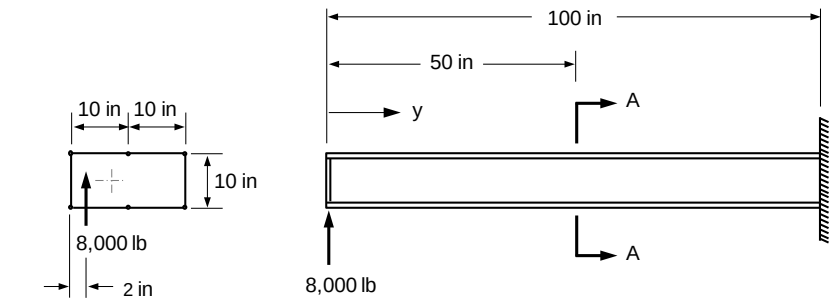

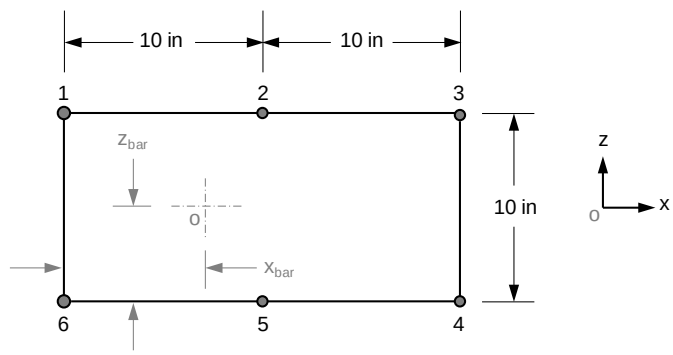

Stringer	Area (in²)
1	2.0
2	1.0
3	1.0
4	1.0
5	1.0
6	2.0

Sectional View A-A
(enlarged for clarity)

(Note clockwise stringer numbering)

Solution Step	Calculation
a) Determine the box beam centroid (Point "o") and moment of inertia about the x-axis.	$x_{bar} = \frac{\Sigma Ax}{\Sigma A} = \frac{2(1.0\ in^2)(20\ in) + 2(1.0\ in^2)(10\ in)}{8.0\ in^2} = 7.50\ in$ $z_{bar} = 5\ in. by\ inspection, due\ to\ symmetry$ $I_x = 2Ad^2 = 2(2.0\ in^2 + 1.0\ in^2 + 1.0\ in^2)(5.0\ in)^2 = 200\ in^4$ Since the beam is symmetric about the x-axis, the product of inertia (I_{xz}) term is zero.
b) Determine the stringer stresses due to bending at stations arbitrarily chosen at y=45 and 55 inches. The symmetric bending stress equation (Equation 6.5.7-2) is used.	At y=45 in.: $f_b = -\frac{M_z}{I_z}x - \frac{M_x}{I_x}z = 0 - \frac{8{,}000\ lb(45\ in)}{200\ in^4}z = -1{,}800\ z$ Stringers 1-3: $f_b = -1{,}800\ z = -1{,}800\ (5) = -9{,}000\ psi$ Stringers 4-6: $f_b = -1{,}800\ z = -1{,}800\ (-5) = 9{,}000\ psi$ At y=55 in.: $f_b = -\frac{M_z}{I_z}x - \frac{M_x}{I_x}z = 0 - \frac{8{,}000\ lb(55\ in)}{200\ in^4}z = -2{,}200\ z$

Copyright 2016 Lockheed Martin Corporation.
Note: The current version is always the version on the Lockheed Martin network

	Stringers 1-3: $f_b = -2{,}200\ z = -2{,}200\ (5) = -11{,}000\ psi$ Stringers 4-6: $f_b = -2{,}200\ z = -2{,}200\ (-5) = 11{,}000\ psi$
c) Determine the stringer axial loads at y=45 and 55 inches. Equation 6.5.7-3 is used.	$P_i = f_b A_i$ At y=45 in.: $P_1 = f_b A_1 = -9{,}000\ psi\ (2.0\ in^2) = -18{,}000\ lb$ $P_{2,3} = f_b A_{2,3} = -9{,}000\ psi\ (1.0\ in^2) = -9{,}000\ lb$ The negative sign indicates compression. The lower stringer loads are tensile and of the same magnitude. At y=55 in.: $P_1 = f_b A_1 = -11{,}000\ psi\ (2.0\ in^2) = -22{,}000\ lb$ $P_{2,3} = f_b A_{2,3} = -11{,}000\ psi\ (1.0\ in^2) = -11{,}000\ lb$
d) Determine the change in stringer axial loads (ΔP) between the two stations.	$\Delta P_i = P_i^{55} - P_i^{45}$ $\Delta P_1 = P_1^{55} - P_1^{45} = -22{,}000\ lb - (-18{,}000\ lb) = -4{,}000\ lb$ $\Delta P_{2,3} = P_{2,3}^{55} - P_{2,3}^{45} = -11{,}000\ lb - (-9{,}000\ lb) = -2{,}000\ lb$ $\Downarrow$ $\Delta P_6 = P_6^{55} - P_6^{45} = 22{,}000\ lb - 18{,}000\ lb = 4{,}000\ lb$
e) Determine the changes in stringer axial loads (ΔP) on a per inch basis, to be used in the open section shear flow (q') calculations in Step (f). Δy is the distance between the two stations (10 in).	$\frac{\Delta P_1}{\Delta y} = \frac{-4{,}000\ lb}{10\ in} = -400\ lb/in$ $\Downarrow$ $\frac{\Delta P_6}{\Delta y} = \frac{4{,}000\ lb}{10\ in} = 400\ lb/in$

Table A: Stringer axial loads

Stringer No.	f_b, psi (y=45 in)	f_b, psi (y=55 in)	P_i, lb (y=45 in)	P_i, lb (y=55 in)	ΔP_i, lb	ΔP/Δy, lb/in
1	-9,000	-11,000	-18,000	-22,000	-4,000	-400
2	-9,000	-11,000	-9,000	-11,000	-2,000	-200
3	-9,000	-11,000	-9,000	-11,000	-2,000	-200
4	9,000	11,000	9,000	11,000	2,000	200
5	9,000	11,000	9,000	11,000	2,000	200
6	9,000	11,000	18,000	22,000	4,000	400

Copyright 2016 Lockheed Martin Corporation.
Note: The current version is always the version on the Lockheed Martin network

f) Using the results of the stringer load calculations (Table A) and Equation 6.5.7-4, determine the open section shear flows (q').

Assume that Web No.6 is the cut web to create the open section.

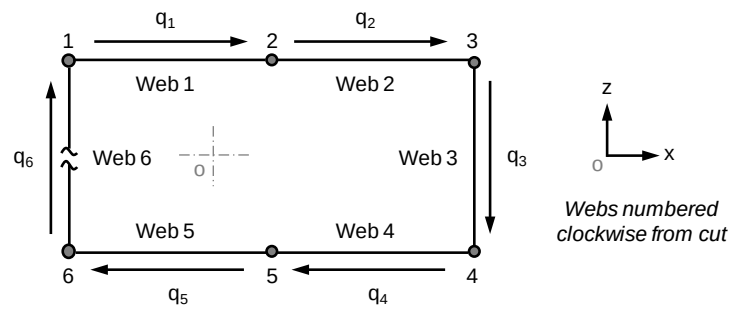

$$q_i' = \frac{\Delta P_i}{\Delta y}$$

$$q_{i+1}' = \frac{1}{\Delta y}(\Delta P_i + \Delta P_{i+1})$$

From the stringer load in Table A:

$q_1' = -400\ lb/in$

$q_2' = -400\ lb/in - 200\ lb/in = -600\ lb/in$

$\Downarrow$

$q_6' = -400\ lb/in - 200\ lb/in - 200\ lb/in + 200\ lb/in + 200\ lb/in + 400\ lb/in$

$q_6' = 0\ lb/in$, which is consistent with the fact that Web 6 is cut.

Table B: Open section shear flows

Stringer No.	Web No.	ΔP/Δy, lb/in(1)	q_i', lb/in
1		-400	
	1		-400
2		-200	
	2		-600
3		-200	
	3		-800
4		200	
	4		-600
5		200	
	5		-400
6		400	
	6		0

(1) Carry-over from Step (e), Table A, shown for convenience

Note that shear flows are positive when acting clockwise on the box at y=0.

Copyright 2016 Lockheed Martin Corporation.
Note: The current version is always the version on the Lockheed Martin network

g) Determine the individual closed areas of the cross section (A_i), to be used in Equation 6.5.7-5.

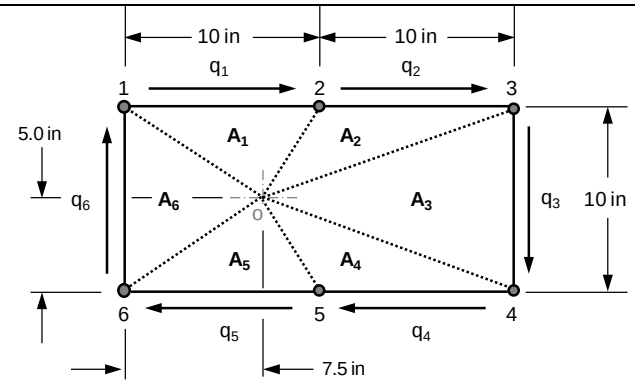

$$A_1 = A_2 = A_4 = A_5 = \frac{bh}{2} = \frac{10\ in(5\ in)}{2} = 25.0\ in^2$$

$$A_3 = \frac{10\ in(20\ in - 7.5\ in)}{2} = 62.5\ in^2$$

$$A_6 = \frac{10\ in(7.5\ in)}{2} = 37.5\ in^2$$

h) Determine the torsion due to open section shear flows using the values from Steps (f), (g) and Equation 6.5.7-5.

$$T_i^{OS} = 2A_i q_i'$$

$$T_1^{OS} = 2A_i q_i' = 2(25\ in^2)(-400\ lb/in) = -20{,}000\ in\text{-}lb$$

$$T_2^{OS} = 2A_i q_i' = 2(25\ in^2)(-600\ lb/in) = -30{,}000\ in\text{-}lb$$

$$\Downarrow$$

$$T_6^{OS} = 2A_i q_i' = 2(25\ in^2)(0\ lb/in) = 0\ in\text{-}lb$$

Table C: Torsion due to open section shear flows

Web No.	$2A_i$ in^2	q_i', lb/in (1)	$2A_i q_i'$, $in\text{-}lb$
1	50	-400	-20,000
2	50	-600	-30,000
3	125	-800	-100,000
4	50	-600	-30,000
5	50	-400	-20,000
6	75	0	0
Sum	400		-200,000

(1) Carry-over from Step (f), Table B, shown for convenience

Note that torsion is positive when acting clockwise on the box at y=0.

i) Solve for the shear flow due to torsion imbalance (q_0) using the values from Step (h) and Equation 6.5.7-6.

The value of the externally applied torsion, T is:
$T = 8{,}000\ lb\ (7.5\ in - 2.0\ in) = 44{,}000\ in\text{-}lb$
This torsion acts clockwise about the centroid of the cross section.

$$q_0 = \frac{T - \Sigma 2Aq_i'}{\Sigma 2A} = \frac{44{,}000\ in\text{-}lb + 200{,}000\ in\text{-}lb}{400\ \text{in}^2} = 610\ lb/in$$

Note that the shear flow is positive when acting clockwise on the box at y=0.

Copyright 2016 Lockheed Martin Corporation.
Note: The current version is always the version on the Lockheed Martin network

j) Determine the final shear flow distribution in the box (q) using Equation 6.5.7-7.

$q_i = q_i' + q_0$
$q_1 = -400\ lb/in + 610\ lb/in = 210\ lb/in$
$q_2 = -600\ lb/in + 610\ lb/in = 10\ lb/in$
$\Downarrow$
$q_6 = 0\ lb/in + 610\ lb/in = 610\ lb/in$

Table D: Final shear flows:

Web No.	q_i', lb/in (1)	q_0, lb/in (2)	$q_i = q_i' + q_0,\ lb/in$
1	-400	610	210
2	-600	610	10
3	-800	610	-190
4	-600	610	10
5	-400	610	210
6	0	610	610

(1) Carry-over a from Step (f), Table B, shown for convenience
(2) Carry-over a from Step (i), shown for convenience

k) The component and total shear flows acting on the beam segment are shown, as well as the axial loads developed in the stringers.

Some form of perspective sketch is required to understand the directions of the internal loads acting on the box beam.

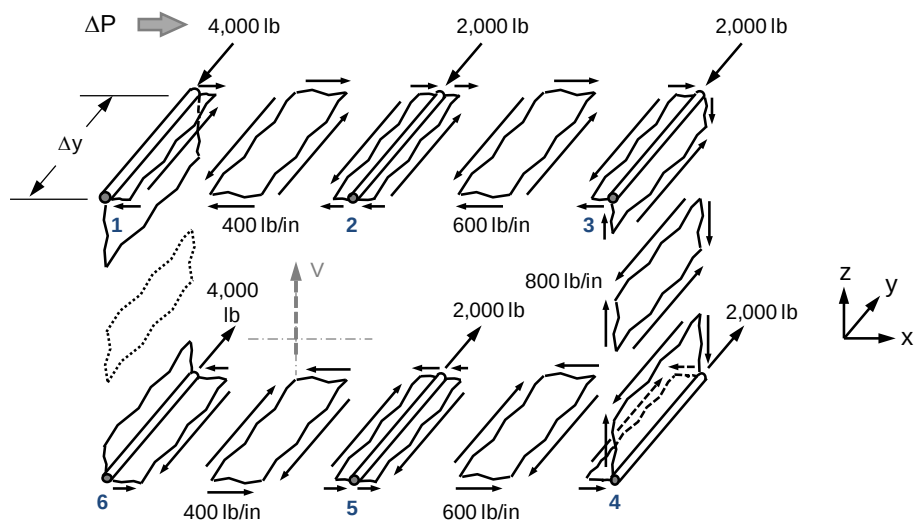

Stringer Axial Load Buildup (ΔP) from Table A and Open Section Shear Flows (q') from Table B

Copyright 2016 Lockheed Martin Corporation.
Note: The current version is always the version on the Lockheed Martin network

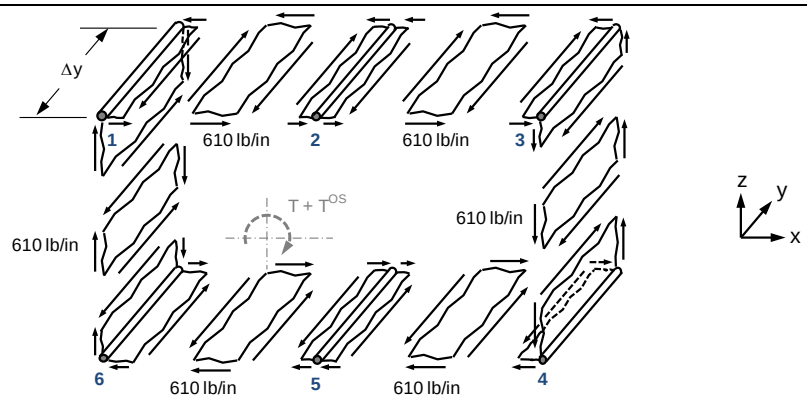

Shear flow due to Torsion (q_0) from Step (i)

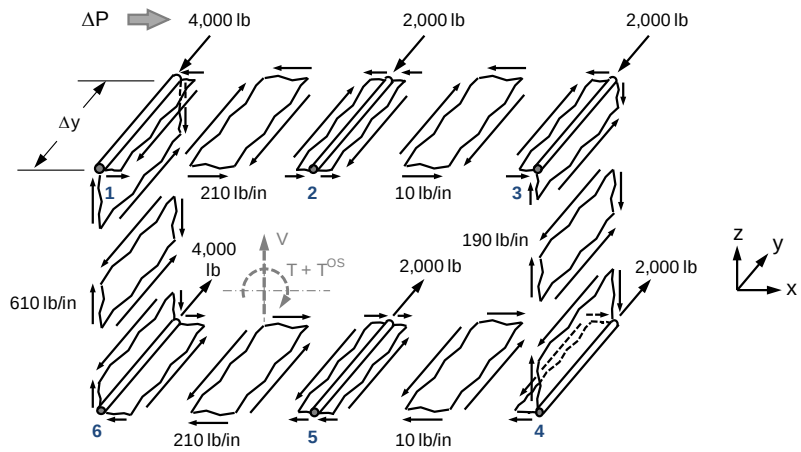

Stringer Axial Load Buildup (ΔP) from Table A and Total Shear Flows ($q = q' + q_0$) from Table D

For reference, a table summarizing the internal loads calculations is shown below:

Stringer Number	Stringer Area, in^2	Web Number	$2A_i$, in^2	f_b, psi (y=45 in)	f_b, psi (y=55 in)	P_i, lb (y=45 in)	P_i, lb (y=55 in)	ΔP_i, lb	$\Delta P/\Delta y$, lb/in [1]	q'_i, lb/in	$2A_i q'_i$, lb/in	q_o, lb/in	$q_i = q'_i + q_o$, lb/in
1	2.0			-9,000	-11,000	-18,000	-22,000	-4,000	-400				
		1	50							-400	-20,000	610	210
2	1.0			-9,000	-11,000	-9,000	-11,000	-2,000	-200				
		2	50							-600	-30,000	610	10
3	1.0			-9,000	-11,000	-9,000	-11,000	-2,000	-200				
		3	125							-800	-100,000	610	-190
4	1.0			9,000	11,000	9,000	11,000	2,000	200				
		4	50							-600	-30,000	610	10
5	1.0			9,000	11,000	9,000	11,000	2,000	200				
		5	50							-400	-20,000	610	210
6	2.0			9,000	11,000	18,000	22,000	4,000	400				
		6	75							0	0	610	610
Total			400								-200,000		

[1] Δy = 10 in

Copyright 2016 Lockheed Martin Corporation.
Note: The current version is always the version on the Lockheed Martin network

6.5.7.1.2 Example Calculation – Internal Load Distribution in a Thin-Sheet, Single Cell, Symmetric Box Beam with Taper

Given:
The idealized box beam shown acts as a cantilever beam. The box is tapered in height. The cross section is symmetric about the horizontal (x) axis
Assume:

1. The rib webs transfer shear only and that they are stable for the loading shown.
2. All axial loads are carried by the flanges and stringers.
3. The axial loads act through the centroids of the flanges and stringers.

Determine the web shear flows for the beam at Section A-A (mid-span).

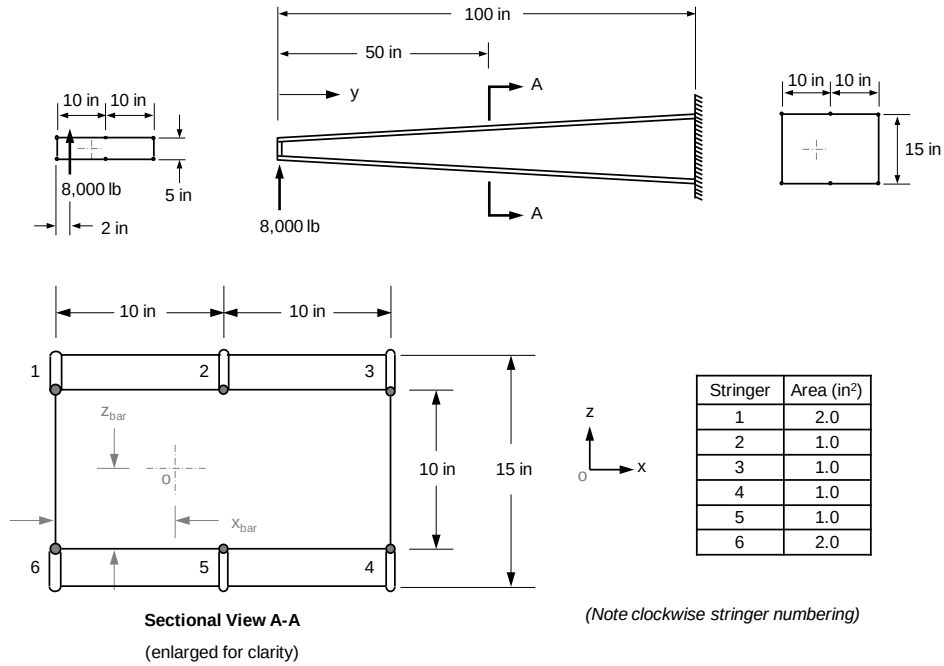

Stringer	Area (in²)
1	2.0
2	1.0
3	1.0
4	1.0
5	1.0
6	2.0

Solution Step	Calculation
a) Determine the box beam centroid (Point o) and moment of inertia about the x-axis. The stringer stresses due to bending will be calculated at stations arbitrarily chosen at y=45 and 55 inches. The moments of inertia are required at these two stations.	$x_{bar} = \frac{\Sigma Ax}{\Sigma A} = \frac{2(1.0\ in^2)(20\ in) + 2(1.0\ in^2)(10\ in)}{8.0\ in^2} = 7.50\ in$ z_{bar} is at the section mid-height, due to symmetry. The section heights at y=45 and 55 inches are 9.5 and 10.5 inches, respectively. $I_x^{45\ in} = 2Ad^2 = 2(2.0\ in^2 + 1.0\ in^2 + 1.0\ in^2)(4.75\ in)^2 = 180.5\ in^4$ $I_x^{55\ in} = 2Ad^2 = 2(2.0\ in^2 + 1.0\ in^2 + 1.0\ in^2)(5.25\ in)^2 = 220.5\ in^4$ Since the beam is symmetric about the x-axis, the product of inertia (I_{xz}) term is zero at both stations.
b) Determine the stringer stresses due to bending at y=45 and 55 inches. The symmetric bending stress equation (Equation 6.5.7-2) is used.	At y=45 in.: $f_b = -\frac{M_z}{I_z}x - \frac{M_x}{I_x}z = 0 - \frac{8{,}000\ lb(45\ in)}{180.5\ in^4}z = -1{,}994.5\ z$ Stringers 1-3: $f_b = -1{,}994.5\ z = -1{,}994.5\ (4.75) = -9{,}474\ psi$ Stringers 4-6: $f_b = -1{,}994.5\ z = -1{,}994.5\ (-4.75) = 9{,}474\ psi$ At y=55 in.: $f_b = -\frac{M_z}{I_z}x - \frac{M_x}{I_x}z = 0 - \frac{8{,}000\ lb(55\ in)}{220.5\ in^4}z = -1{,}995.5\ z$

Copyright 2016 Lockheed Martin Corporation.
Note: The current version is always the version on the Lockheed Martin network

	Stringers 1-3: $f_b = -1{,}995.5\ z = -1{,}995.5\ (5.25) = -10{,}476\ psi$ Stringers 4-6: $f_b = -1{,}995.5\ z = -1{,}995.5\ (-5.25) = 10{,}476\ psi$
c) Determine the stringer axial loads at y=45 and 55 inches. Equation 6.5.7-3 is used.	$P_i = f_b A_i$ At y=45 in.: $P_1 = f_b A_1 = -9{,}474\ psi\ (2.0\ in^2) = -18{,}948\ lb$ $P_{2,3} = f_b A_{2,3} = -9{,}474\ psi\ (1.0\ in^2) = -9{,}474\ lb$ The negative sign indicates compression. The lower stringer loads are tensile and of the same magnitude. At y=55 in.: $P_1 = f_b A_1 = -10{,}476\ psi\ (2.0\ in^2) = -20{,}952\ lb$ $P_{2,3} = f_b A_{2,3} = -10{,}476\ psi\ (1.0\ in^2) = -10{,}476\ lb$
d) Determine the change in stringer axial loads (ΔP) between the two stations.	$\Delta P_i = P_i^{55} - P_i^{45}$ $\Delta P_1 = P_1^{55} - P_1^{45} = -20{,}952\ lb - (-18{,}948\ lb) = -2{,}004\ lb$ $\Delta P_{2,3} = P_{2,3}^{55} - P_{2,3}^{45} = -10{,}476\ lb - (-9{,}474\ lb) = -1{,}002\ lb$ $\Downarrow$ $\Delta P_6 = P_6^{55} - P_6^{45} = 20{,}952\ lb - 18{,}948\ lb = 2{,}004\ lb$ Note that these flange loads are horizontal, not inclined with the flange. For reference, the vertical component of the flange load is: 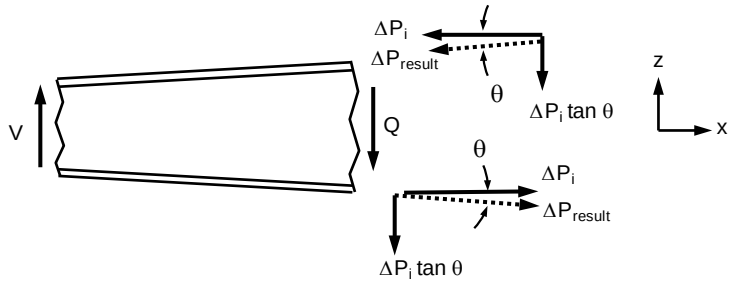 From the problem geometry definition: $Tan\theta = \frac{10\ in - 5\ in}{2(50\ in)} = 0.05$ $\Delta P_{1,z} = \Delta P_1\ Tan\theta = 0.05(-2{,}004\ lb) = -100\ lb$ $\Delta P_{2,z} = \Delta P_2\ Tan\theta = 0.05(-1{,}002\ lb) = -50\ lb$ $\Downarrow$ $\Delta P_{6,z} = \Delta P_6\ Tan\theta = 0.05(2{,}004\ lb) = 100\ lb$ *Note that the vertical flange load components are not used in the shear flow calculations. They are listed in Table A for reference only.*

Copyright 2016 Lockheed Martin Corporation.
Note: The current version is always the version on the Lockheed Martin network

e) Determine the changes in stringer axial loads (ΔP) on a per inch basis, to be used in the open section shear flow (q') calculations in Step (f).
Δy is the distance between the two stations (10 in).

$$\frac{\Delta P_1}{\Delta y} = \frac{-2{,}004\ lb}{10\ in} = -200\ lb/in$$

$$\Downarrow$$

$$\frac{\Delta P_6}{\Delta y} = \frac{2{,}004\ lb}{10\ in} = 200\ lb/in$$

Table A: Stringer axial loads:

Stringer No.	f_b, psi (y=45 in)	f_b, psi (y=55 in)	P_i, lb (y=45 in)	P_i, lb (y=55 in)	ΔP_i, lb	ΔP_i Tan θ, lb (1)	ΔP/Δy, lb/in
1	-9,474	-10,476	-18,948	-20,952	-2,004	-100	-200
2	-9,474	-10,476	-9,474	-10,476	-1,002	-50	-100
3	-9,474	-10,476	-9,474	-10,476	-1,002	-50	-100
4	9,474	10,476	9,474	10,476	1,002	50	100
5	9,474	10,476	9,474	10,476	1,002	50	100
6	9,474	10,476	18,948	20,952	2,004	100	200

(1) Reference only, from Step (d)

f) Using the results of the stringer load calculations (Table A) and Equation 6.5.7-4, determine the open section shear flows (q').

Assume that Web No.6 is the cut web to create the open section.

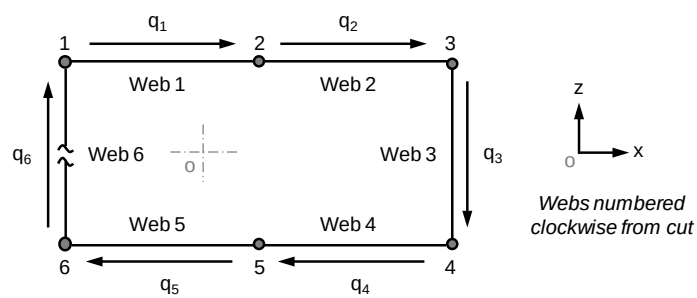

$$q_i' = \frac{\Delta P_i}{\Delta y}$$

$$q_{i+1}' = \frac{1}{\Delta y}(\Delta P_i + \Delta P_{i+1})$$

From the stringer load in Table A:

$q_1' = -200\ lb/in$

$q_2' = -200\ lb/in - 100\ lb/in = -300\ lb/in$

$\Downarrow$

$q_6' = -200\ lb/in - 100\ lb/in - 100\ lb/in + 100\ lb/in + 100\ lb/in + 200\ lb/in$

$q_6' = 0\ lb/in$, which is consistent with the fact that Web 6 is cut.

Table B: Open section shear flows

Stringer No.	Web No.	ΔP/Δy, lb/in(1)	q_i', lb/in
1		-200	
	1		-200
2		-100	
	2		-300
3		-100	
	3		-400

(continued on following page)

Copyright 2016 Lockheed Martin Corporation.
Note: The current version is always the version on the Lockheed Martin network

Table B: Open section shear flows (continued)

Stringer No.	Web No.	ΔP/Δy, lb/in(1)	q_i', lb/in
4		100	
	4		-300
5		100	
	5		-200
6		200	
	6		0

(1) Carry-over from Step (e), Table A, shown for convenience

Note that shear flows are positive when acting clockwise on the box at y=0.

g) Determine the individual closed areas of the cross section (A_i), to be used in Equation 6.5.7-5.

Note that the enclosed area at Section A-A is used.

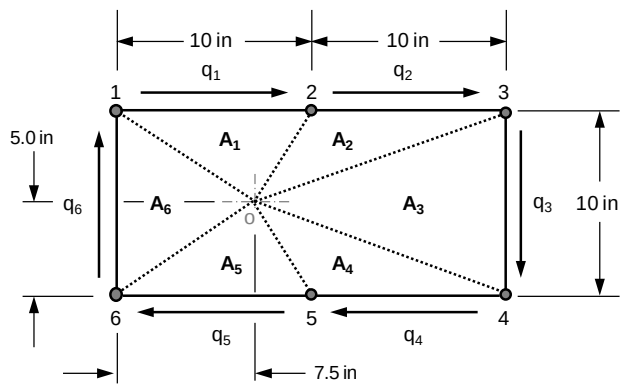

$$A_1 = A_2 = A_4 = A_5 = \frac{bh}{2} = \frac{10\ in(5\ in)}{2} = 25.0\ in^2$$

$$A_3 = \frac{10\ in(20\ in - 7.5\ in)}{2} = 62.5\ in^2$$

$$A_6 = \frac{10\ in(7.5\ in)}{2} = 37.5\ in^2$$

h) Determine the torsion due to open section shear flows using the values from Steps (f), (g) and Equation 6.5.7-5.

$$T_i^{OS} = 2A_i q_i'$$
$$T_1^{OS} = 2A_i q_i' = 2(25\ in^2)(-200\ lb/in) = -10{,}000\ in\text{-}lb$$
$$T_2^{OS} = 2A_i q_i' = 2(25\ in^2)(-300\ lb/in) = -15{,}000\ in\text{-}lb$$
$$\Downarrow$$
$$T_6^{OS} = 2A_i q_i' = 2(25\ in^2)(0\ lb/in) = 0\ in\text{-}lb$$

Table C: Torsion due to open section shear flows

Web No.	$2A_i$ in^2	q_i', lb/in (1)	$2A_i q_i'$, *in-lb*
1	50	-200	-10,000
2	50	-300	-15,000
3	125	-400	-50,000
4	50	-300	-15,000
5	50	-200	-10,000
6	75	0	0
Sum	400		-100,000

(1) Carry-over from Step (f), Table B, shown for convenience

Note that torsion is positive when acting clockwise on the box at y=0.

Copyright 2016 Lockheed Martin Corporation.
Note: The current version is always the version on the Lockheed Martin network

i) Solve for the shear flow due to torsion imbalance (q_0) using the values from Step (h) and Equation 6.5.7-6.

The value of the externally applied torsion, T is:
$T = 8{,}000\ lb\ (7.5\ in - 2.0\ in) = 44{,}000\ in\text{-}lb$
This torsion acts clockwise about the centroid of the cross section.

$$q_0 = \frac{T - \Sigma 2Aq_i'}{\Sigma 2A} = \frac{44{,}000\ in\text{-}lb + 100{,}000\ in\text{-}lb}{400\ \text{in}^2} = 360\ lb/in$$

Note that the shear flow is positive when acting clockwise on the box at y=0.

j) Determine the final shear flow distribution in the box (q) using Equation 6.5.7-7.

$q_i = q_i' + q_0$
$q_1 = -200\ lb/in + 360\ lb/in = 160\ lb/in$
$q_2 = -300\ lb/in + 360\ lb/in = 60\ lb/in$
$\Downarrow$
$q_6 = 0\ lb/in + 360\ lb/in = 360\ lb/in$

Table D: Final shear flows:

Web No.	q_i', lb/in (1)	q_0, lb/in (2)	$q_i = q_i' + q_0$, lb/in
1	-200	360	160
2	-300	360	60
3	-400	360	-40
4	-300	360	60
5	-200	360	160
6	0	360	360

(1) Carry-over a from Step (f), Table B, shown for convenience
(2) Carry-over a from Step (i), shown for convenience

k) The component and total shear flows acting on the beam segment are shown, as well as the axial loads developed in the stringers.

Note the vertical components of the stringer loads developed over the length Δy (400 lb total). These are due to the beam taper. Values shown are from Table (A).

Again, some form of perspective sketch is required to understand the directions of the internal loads acting on the box beam.

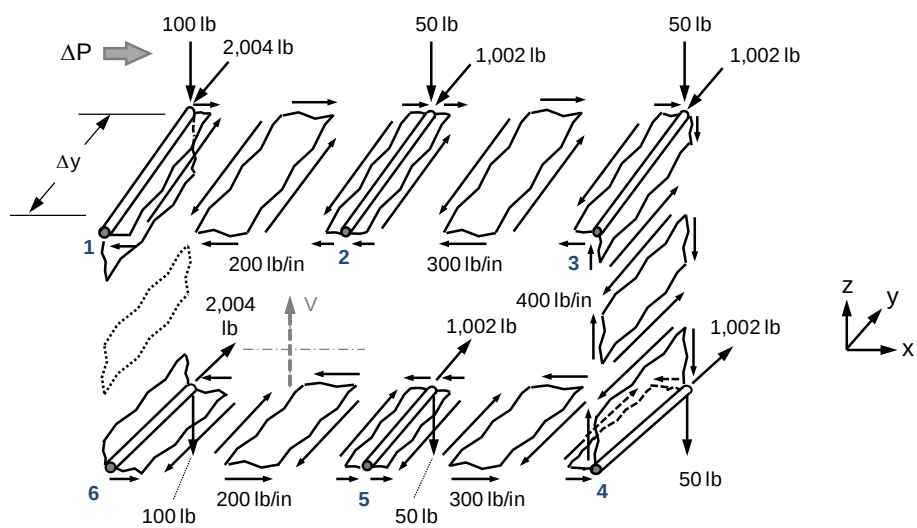

Stringer Axial Load Buildup (ΔP) from Table A and Open Section Shear Flows (q') from Table B

Copyright 2016 Lockheed Martin Corporation.
Note: The current version is always the version on the Lockheed Martin network

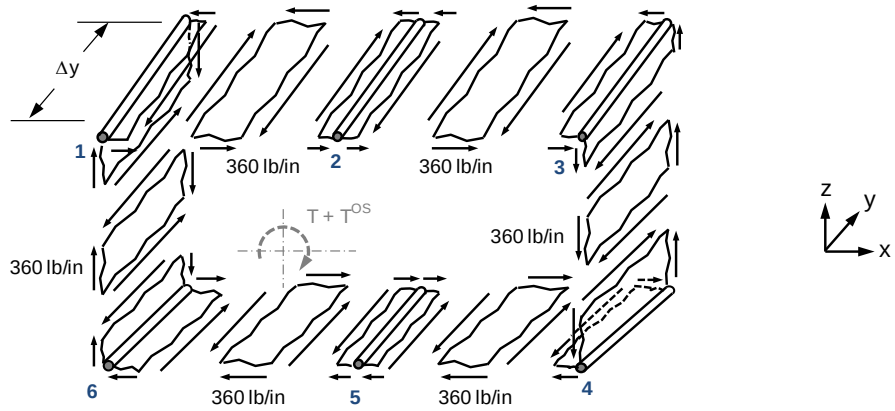

Shear flow due to Torsion (q_0) from Step (i)

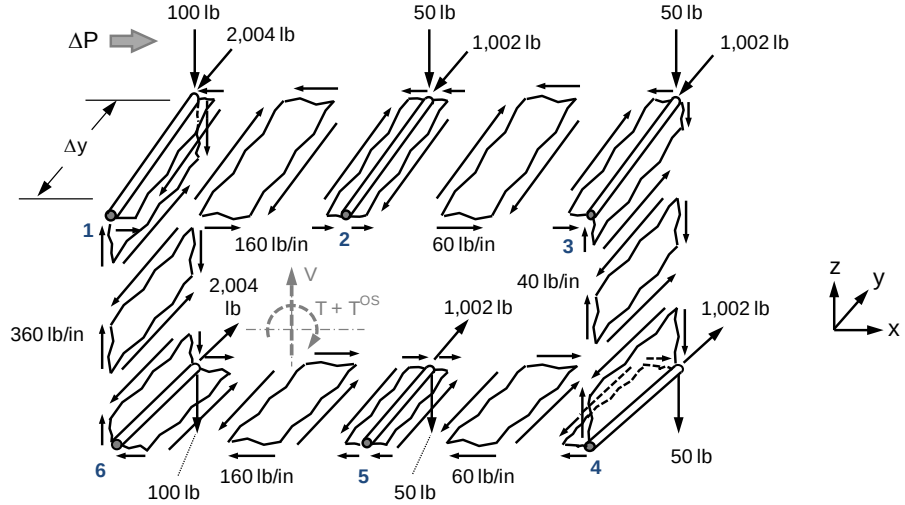

Stringer Axial Load Buildup (ΔP) from Table A and Total Shear Flows ($q = q' + q_0$) from Table D

Copyright 2016 Lockheed Martin Corporation.
Note: The current version is always the version on the Lockheed Martin network

For reference, a table summarizing the internal loads calculations is shown below:

Stiffener Number	Stiffener Area, in^2	Web Number	$2A_i$, in^2	f_b, psi (y=45 in)	f_b, psi (y=55 in)	P_i, lb (y=45 in)	P_i, lb (y=55 in)	ΔP_i, lb	$\Delta P/\Delta y$, lb/in [1]	q'_i, lb/in	$2A_i q'_i$, lb/in	q_o, lb/in	$q_i = q'_i + q_o$, lb/in
1	2.0			-9,474	-10,476	-18,948	-20,952	-2,004	-200				
		1	50							-200	-10,000	360	160
2	1.0			-9,474	-10,476	-9,474	-10,476	-1,002	-100				
		2	50							-300	-15,000	360	60
3	1.0			-9,474	-10,476	-9,474	-10,476	-1,002	-100				
		3	125							-400	-50,000	360	-40
4	1.0			9,474	10,476	9,474	10,476	1,002	100				
		4	50							-300	-15,000	360	60
5	1.0			9,474	10,476	9,474	10,476	1,002	100				
		5	50							-200	-10,000	360	160
6	2.0			9,474	10,476	18,948	20,952	2,004	200				
		6	75							0	0	360	360
Total			400								-100,000		

[1] Δy = 10 in

Note:
These results do not match those of Example 6.5.7.1.1 despite the fact that the beam section is the same at the analysis location. This is due to the beam taper. As described in Section 6.5.6 and Step (d), a portion of the externally applied shear load is carried by the stringers. Because this method uses stringer axial loads as its basis, the effects of beam taper are automatically included the results. Do not use the beam geometry to reduce the shear load at the section of interest, as this will yield incorrect results.

Copyright 2016 Lockheed Martin Corporation.
Note: The current version is always the version on the Lockheed Martin network

6.5.7.1.3 Example Calculation – Internal Load Distribution in a Thin-Sheet, Single Cell, Unsymmetrical Box Beam

Given:
The idealized box beam shown acts as a cantilever beam. The box is of uniform cross section and symmetric about the horizontal (x) axis

Assume:

1. The rib webs transfer shear only and that they are stable for the loading shown.
2. All axial loads are carried by the flanges and stringers.
3. The axial loads act through the centroids of the flanges and stringers.

Determine the web shear flows for the beam.

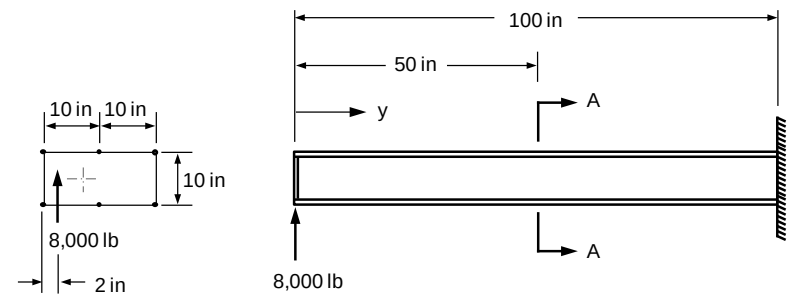

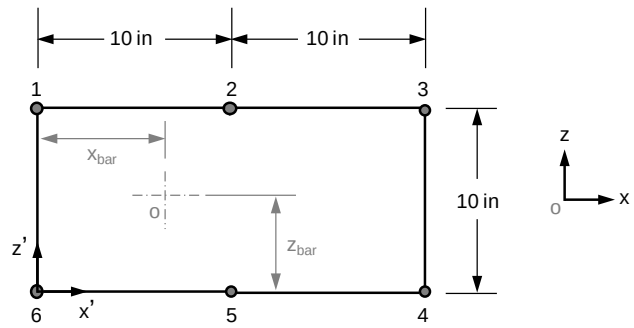

Stringer	Area (in^2)
1	2.0
2	2.0
3	1.0
4	1.0
5	1.0
6	2.0

Sectional View A-A
(enlarged for clarity)

(Note clockwise stringer numbering)

Solution Step	Calculation

a) Determine the box beam centroid (Point o) and moments of inertia.
Due to the asymmetry, the product of inertia term is not zero.

Table A: Section property calculations

Stringer No.	A, in^2	x', in	z', in	Ax', in^3	A(x')^2, in^4	Az', in^3	A(z')^2, in^4	Ax'z', in^4
1	2.0	0	10	0	0	20	200	0
2	2.0	10	10	20	200	20	200	200
3	1.0	20	10	20	400	10	100	200
4	1.0	20	0	20	400	0	0	0
5	1.0	10	0	10	100	0	0	0
6	2.0	0	0	0	0	0	0	0
Sum	9.0			70	1,100	50	500	400

$$x_{bar} = \frac{\Sigma Ax'}{\Sigma A} = \frac{70\ in^3}{9.0\ in^2} = 7.78\ in$$

$$z_{bar} = \frac{\Sigma Az'}{\Sigma A} = \frac{50\ in^3}{9.0\ in^2} = 5.56\ in$$

$$I_x = A(z')^2 - Az_{bar}^2 = 500\ in^2 - (9.0\ in^2)(5.56\ in)^2 = 221.78\ in^4$$

$$I_z = A(x')^2 - Ax_{bar}^2 = 1{,}100\ in^2 - (9.0\ in^2)(7.78\ in)^2 = 555.24\ in^4$$

$$I_{xz} = Ax'z' - Ax_{bar}z_{bar} = 400\ in^2 - (9.0\ in^2)(7.78\ in)(5.56\ in) = 10.69\ in^4$$

Copyright 2016 Lockheed Martin Corporation.
Note: The current version is always the version on the Lockheed Martin network

b) Determine the stringer stresses due to bending at stations arbitrarily chosen at y=45 and 55 inches. The unsymmetrical bending stress equation (Equation 6.5.7-1) is used.

$$f_b = \frac{M_x I_{xz} - M_z I_x}{I_x I_z - I_{xz}^2} x_o + \frac{M_z I_{xz} - M_x I_z}{I_x I_z - I_{xz}^2} z_o$$

Where x_o and z_o are measured from the section centroid, Point o.

At y=45 in.:

$$f_b = \frac{8{,}000\ lb(45\ in)(10.69\ in^4) - 0}{221.78\ in^4\ (555.24\ in^4) - (10.69\ in^4)^2} x$$

$$+ \frac{0 - 8{,}000\ lb(45\ in)(555.24\ in^4)}{221.78\ in^4\ (555.24\ in^4) - (10.69\ in^4)^2} z$$

$$f_b = 31.281\ x_o - 1624.738\ z_o$$

At y=55 in.:

$$f_b = \frac{8{,}000\ lb(55\ in)(10.69\ in^4) - 0}{221.78\ in^4\ (555.24\ in^4) - (10.69\ in^4)^2} x$$

$$+ \frac{0 - 8{,}000\ lb(55\ in)(555.24\ in^4)}{221.78\ in^4\ (555.24\ in^4) - (10.69\ in^4)^2} z$$

$$f_b = 38.232\ x_o - 1985.791\ z_o$$

The flange / stringer axial stresses due to bending at the two stations are:

Table B: Stringer stresses due to bending at the two stations

Stringer No.	x_0, in	y_0, in	f_b, psi (y=45 in)	f_b, psi (y=55 in)
1	-7.78	4.44	-7,457	-9,114
2	2.22	4.44	-7,144	-8,732
3	12.22	4.44	-6,832	-8,350
4	12.22	-5.56	9,416	11,508
5	2.22	-5.56	9,103	11,126
6	-7.78	-5.56	8,790	10,744

c) Determine the stringer axial loads at y=45 and 55 inches. Equation 6.5.7-3 is used.

$$P_i = f_b A_i$$

Table C: Stringer axial loads due to bending at the two stations:

Stringer No.	A_i, in^2	f_b, psi (y=45 in) (1)	f_b, psi (y=55 in) (1)	P_i, lb (y=45 in)	P_i, lb (y=55 in)
1	2.0	-7,457	-9,114	-14,914	-18,228
2	2.0	-7,144	-8,732	-14,288	-17,464
3	1.0	-6,832	-8,350	-6,832	-8,350
4	1.0	9,416	11,508	9,416	11,508
5	1.0	9,103	11,126	9,103	11,126
6	2.0	8,790	10,744	17,580	21,488

(1) Carry-over from Step (b), Table B, shown for convenience

d) The changes in stringer axial loads (ΔP) on a per inch basis are shown in Table D.
Δy is the distance between the two stations (10 in).

$$\Delta P_i = P_i^{55} - P_i^{45}$$

On a per inch basis,

$$\frac{\Delta P_i}{\Delta y}$$

Copyright 2016 Lockheed Martin Corporation.
Note: The current version is always the version on the Lockheed Martin network

Table D: Summary of stringer loads

Stringer No.	f_b, psi (y=45 in)	f_b, psi (y=55 in)	P_i, lb (y=45 in)	P_i, lb (y=55 in)	ΔP_i, lb	$\Delta P/\Delta y$, lb/in
1	-7,457	-9,114	-14,914	-18,228	-3,314	-331
2	-7,144	-8,732	-14,288	-17,464	-3,176	-318
3	-6,832	-8,350	-6,832	-8,350	-1,518	-152
4	9,416	11,508	9,416	11,508	2,092	209
5	9,103	11,126	9,103	11,126	2,023	202
6	8,790	10,744	17,580	21,488	3,908	391

The remaining internal load calculations are similar to Example 6.5.7.1 and are shown below in Table E.

Table E: Final Shear Flow Calculations

Flange Number	Flange Area, in^2	Web Number	$2A_i$, in^2	f_b, psi (y=45 in)	f_b, psi (y=55 in)	P_i, lb (y=45 in)	P_i, lb (y=55 in)	ΔP_i, lb	$\Delta P/\Delta y$, lb/in [1]	q'_i, lb/in	$2A_i q'_i$, lb/in	q_o, lb/in	$q_i = q'_i + q_o$, lb/in
1	2.0			-7,457	-9,114	-14,914	-18,228	-3,314	-331				
		1	50							-331	-16,550	611	280
2	2.0			-7,144	-8,732	-14,288	-17,464	-3,176	-318				
		2	50							-649	-32,450	611	-38
3	1.0			-6,832	-8,350	-6,832	-8,350	-1,518	-152				
		3	125							-801	-100,125	611	-190
4	1.0			9,416	11,508	9,416	11,508	2,092	209				
		4	50							-592	-29,600	611	19
5	1.0			9,103	11,126	9,103	11,126	2,023	202				
		5	50							-390	-19,500	611	221
6	2.0			8,790	10,744	17,580	21,488	3,908	391				
		6	75							0	0	611	611
Total			400								-198,225		

[1] Δy = 10 in

The value of the externally applied torsion, T is:

$T = 8{,}000\ lb\ (7.78\ in - 2.0\ in) = 46{,}240\ in\text{-}lb$

This torsion acts clockwise about the centroid of the cross section.

$$q_0 = \frac{T - \Sigma 2Aq'_i}{\Sigma 2A} = \frac{46{,}240\ in\text{-}lb + 198{,}225\ in\text{-}lb}{400\ \text{in}^2} = 611\ lb/in$$

The total loads acting on the beam segment are shown below:

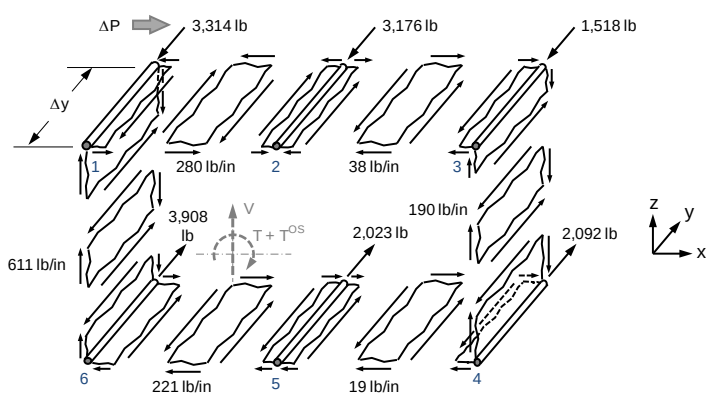

Stringer Axial Load Buildup (ΔP) from Table D and Total Shear Flows ($q = q' + q_o$) from Table E

Copyright 2016 Lockheed Martin Corporation.
Note: The current version is always the version on the Lockheed Martin network

6.5.7.2 Internal Load Distribution in a Thin Sheet, Multi-Cell Box Beam

The method developed in this section to determine the shear flow in a multi-cell box beam is similar to that for the single-cell box and is again based upon the "Unit Method" by Shanley and Cozzone (Reference 6-31). The shear flows in a multi-cell box include components due to both the externally applied shear and its accompanying torsion. The torsion is created through the shear load transfer from the application point to the beam shear center. As with the single-cell box, the load path for the external shear is statically indeterminate. The multi-cell box differs from the single-cell box in that the load path for the torsion loading is also statically indeterminate, the level of redundancy being equal to the number of cells in the box minus one. Thus, a two-cell box beam is singly redundant. As is typical in redundant solutions, deflection equations augment the equations of statics to solve for the internal loads. The behavior of multi-cell box beams in torsion is explained further in Section 7.3.2.

The procedure outlined below allows for the internal load distribution to be determined:

1. Determine the flange / stringer axial loads due to bending.
2. Analytically "cut" a box skin in each cell to create statically determinate open sections. Determine the open section shear flows due to the externally applied shear only, neglecting torsion.
3. Impose the condition of zero twist for the cross section subject to external shear loading only, assuming a closed torque box. The shear flows required to maintain this condition are determined. Note that superimposing the open section shear flows (from Step 2) onto these values produces a system of shear flows whose resultant is equal to the externally applied load acting through the shear center.
4. Determine the external torque about the shear center using the applied torsion and the torsion resulting from the shear flows obtained in Steps 2 and 3.
5. Superimpose the open section (Step 2), zero twist (Step 3) and torsion shear flows (Step 4) to determine the final shear flow distribution.

Again, since the webs carry shear only, the flange / stringer axial loads are not affected by this procedure.

The analysis procedure is developed in the general case and may be used for multi-cell box beams which include any combination of the following:

- Symmetrical or unsymmetrical cross sections
- Planform and/or height taper
- Varying flange / stringer areas at different beam stations, including terminations
- Bending about both axes

Due to the torsion redundancy, the multi-cell internal loads procedure introduces equations which are based upon the box angle of twist. Equation 7.3.1-6 may be written in the form:

$$\varphi = \sum \frac{q \Delta s L}{2AtG}$$ **Equation 6.5.7-8**

Where:
φ is the box angle of twist (radians)
q is the web shear flow (lb)
Δs is the web length between stiffeners (in)
L is the box length (in)
A is the box enclosed area (in^2)
t is the web thickness at the analysis location (in)
G is the box shear modulus (psi)

Figure 6.5.7-7 provides the reference geometry defintion and shear flow sign convention for a multi-cell box beams.

Copyright 2016 Lockheed Martin Corporation.
Note: The current version is always the version on the Lockheed Martin network

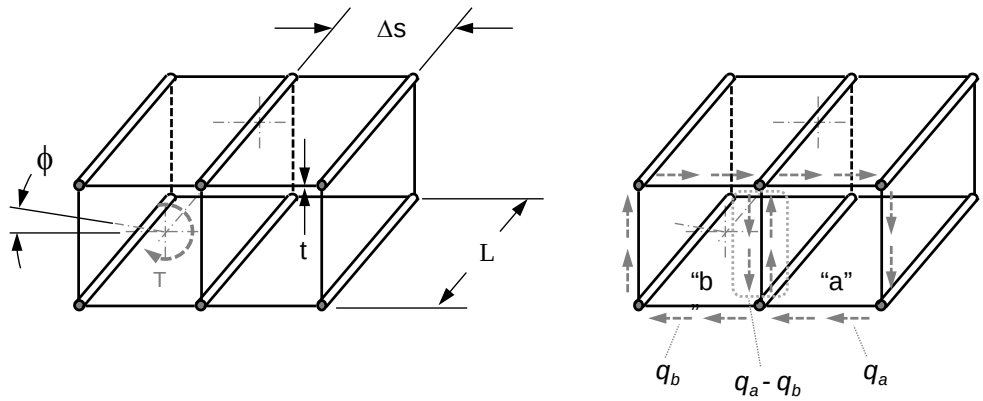

Figure 6.5.7-7 Multi-Cell Box Beam Reference Geometry and Shear Flow Convention

Although Equation 6.5.7-8 is shown written in terms of the entire box, the equation may be applied to the individual cells, or any combination that forms a closed path. It is assumed that all cells twist through the same angle φ and that G is constant for all webs. By removing like terms, the angle of twist equations may be written as shown for a unit length of two cell box:

$$\frac{q_a}{A_a}\sum_a \frac{\Delta s}{t} - \frac{q_b}{A_a}\left(\frac{\Delta s}{t}\right)_{a-b} = \frac{q_b}{A_b}\sum_b \frac{\Delta s}{t} - \frac{q_a}{A_b}\left(\frac{\Delta s}{t}\right)_{a-b} \qquad \textbf{Equation 6.5.7-9}$$

Where :
"a" denotes Cell "a"
"b" denotes Cell "b"
"a-b" denotes the web between Cells "a" and "b"

Equation 6.5.7-9 is used in the procedure to calculate internal loads, developed as follows for a two cell box:

1. <u>Determine flange / stringer axial loads due to bending</u>: The general and symmetric forms of the bending stress equations are identical to the single cell box beam, given by Equations 6.5.7-1 and 6.5.7-2. The individual stringer loads are given by Equation 6.5.7-3.

2. <u>Determine the open section shear flows due to applied shear load</u>: The multi-cell box is treated as a series of single-cell box beams. A panel in each cell is "cut" to remove the redundancy in the shear path, creating open sections. Summations of span-wise stringer forces are then used to determine the skin shear flows for the open sections, again designated by q_i'. Equation 6.5.7-4 is then used to determine the values of the open section shear flows.

3. <u>Determine the shear flows required to maintain zero twist under shear loading</u>: These equations include the twist contribution from the open section shear flows in Step 2.

$$\sum_{\mathrm{a}} q_i'\frac{\Delta s}{t} + q_{as}\sum_a \frac{\Delta s}{t} - q_{bs}\left(\frac{\Delta s}{t}\right)_{a-b} = 0 \qquad \text{Cell "a"} \qquad \textbf{Equation 6.5.7-10}$$

$$\sum_{\mathrm{b}} q_i'\frac{\Delta s}{t} + q_{bs}\sum_b \frac{\Delta s}{t} - q_{as}\left(\frac{\Delta s}{t}\right)_{a-b} = 0 \qquad \text{Cell "b"} \qquad \textbf{Equation 6.5.7-10b}$$

These equations must be solved simultaneously. The "s" terms in the subscripts indicate that the shear flows are due to the direct shear load only, as opposed to the shear flows due to torsion.

Copyright 2016 Lockheed Martin Corporation.
Note: The current version is always the version on the Lockheed Martin network

4. Determine the torque acting about the box beam shear center:

$$T = T_o - \Sigma 2A_i q_i' - 2A_a q_{as} - 2A_b q_{bs}$$ **Equation 6.5.7-11**

Where T_o is the torque about the reference point (o).

5. Equate the angle of twist for the two cells: This is done using Equation 6.5.7-9.

$$\frac{q_{at}}{A_a}\sum_a \frac{\Delta s}{t} - \frac{q_{bt}}{A_a}\left(\frac{\Delta s}{t}\right)_{a-b} = \frac{q_{bt}}{A_b}\sum_b \frac{\Delta s}{t} - \frac{q_{at}}{A_b}\left(\frac{\Delta s}{t}\right)_{a-b}$$

The "t" terms in the subscripts indicate that the shear flows are due to the torsion only, as opposed to the shear flows due to direct shear.

6. Equate the externally applied torque to the sum of the torques in each cell:

$$T = 2A_a q_{at} + 2A_b q_{bt}$$ **Equation 6.5.7-12**

7. Calculate the shear flows due to pure torsion by solving Equations 6.5.7-9 and 6.5.7-12 simultaneously.
8. Combine the results from Steps 2,3 and 7 to obtain the final shear flow distribution.

$$q_i = q_i' + q_{as} + q_{at}$$ Cell "a" **Equation 6.5.7-13a**

$$q_i = q_i' + q_{bs} + q_{bt}$$ Cell "b" **Equation 6.5.7-13b**

$$q_i = q_i' + q_{as} + q_{at} - q_{bs} - q_{bt}$$ Center Web **Equation 6.5.7-13c**

Copyright 2016 Lockheed Martin Corporation.
Note: The current version is always the version on the Lockheed Martin network

6.5.7.2.1 Example Calculation – Internal Load Distribution in a Thin-Sheet, Multi-Cell, Symmetric Box Beam

Given:
The idealized box beam shown acts as a cantilever beam. The box is of uniform cross section and symmetric about the horizontal (x) axis
Assume:

1. The rib webs transfer shear only and that they are stable for the loading shown.
2. All axial loads are carried by the flanges and stringers.
3. The axial loads act through the centroids of the flanges and stringers.
4. The shear modulus (G) is constant for all webs.

Determine the web shear flows for the beam.

Note that the box is similar to that in Example 6.5.7.1.1, except for the addition of the center web (No. 7).

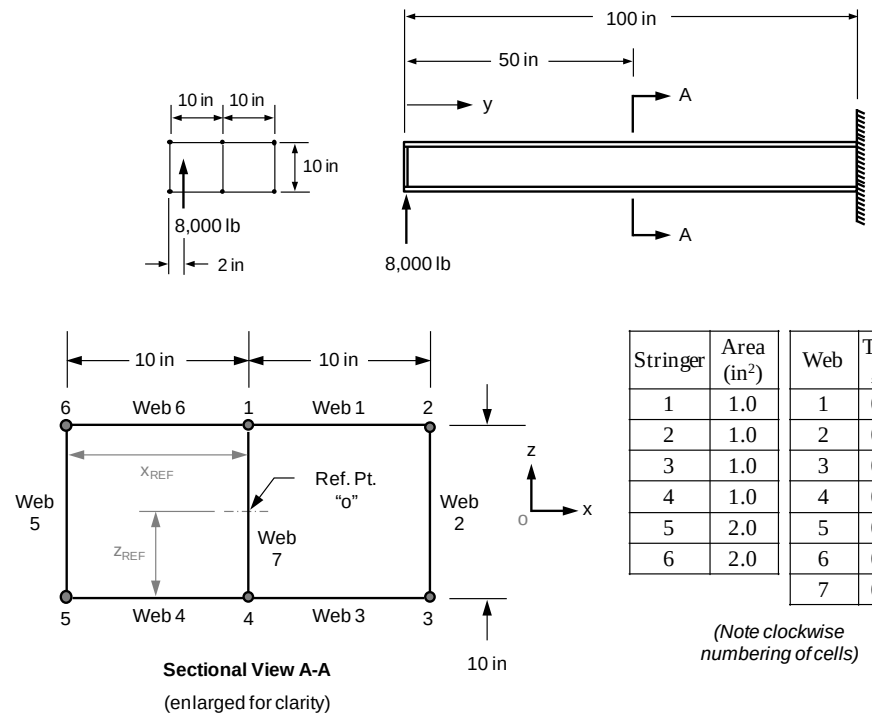

Stringer	Area (in^2)
1	1.0
2	1.0
3	1.0
4	1.0
5	2.0
6	2.0

Web	Thick., (in)
1	0.04
2	0.04
3	0.04
4	0.04
5	0.08
6	0.04
7	0.05

(Note clockwise numbering of cells)

Solution Step	Calculation
a) Determine the cross section reference point ("o") and moment of inertia about the x-axis.	The reference point is chosen at the intersection of the bending neutral axis and the center web. This location facilitates the calculation of the stringer axial loads and the individual torsion areas for the two cells. $x_{REF} = 10\ in$ $z_{REF} = 5\ in$ $I_x = 200\ in^4$ (This value is identical to Example 6.5.7.1.1) Since the beam is symmetric about the x-axis, the product of inertia (I_{xz}) term is zero.
b) Determine the stringer stresses due to bending at stations arbitrarily chosen at y=45 and 55 inches. The symmetric bending stress equation (Equation 6.5.7-2) is used.	At y=45 in.: $f_b = -\frac{M_z}{I_z}x - \frac{M_x}{I_x}z = 0 - \frac{8{,}000\ lb(45\ in)}{200\ in^4}z = -1{,}800\ z$ Stringers 1, 2 and 6: $f_b = -1{,}800\ z = -1{,}800\ (5) = -9{,}000\ psi$ Stringers 3-5: $f_b = -1{,}800\ z = -1{,}800\ (-5) = 9{,}000\ psi$ At y=55 in.:

Copyright 2016 Lockheed Martin Corporation.
Note: The current version is always the version on the Lockheed Martin network

	$f_b = -\frac{M_z}{I_z}x - \frac{M_x}{I_x}z = 0 - \frac{8{,}000\ lb(55\ in)}{200\ in^4}z = -2{,}200\ z$ Stringers 1, 2 and 6: $f_b = -2{,}200\ z = -2{,}200\ (5) = -11{,}000\ psi$ Stringers 3-5: $f_b = -2{,}200\ z = -2{,}200\ (-5) = 11{,}000\ psi$
c) Determine the stringer axial loads at y=45 and 55 inches. Equation 6.5.7-3 is used.	$P_i = f_b A_i$ At y=45 in.: $P_{1,2} = f_b A_{1,2} = -9{,}000\ psi\ (1.0\ in^2) = -9{,}000\ lb$ $P_6 = f_b A_6 = -9{,}000\ psi\ (2.0\ in^2) = -18{,}000\ lb$ The negative sign indicates compression. The lower stringer loads are tensile and of the same magnitude. At y=55 in.: $P_{1,2} = f_b A_{1,2} = -11{,}000\ psi\ (1.0\ in^2) = -11{,}000\ lb$ $P_6 = f_b A_6 = -11{,}000\ psi\ (2.0\ in^2) = -22{,}000\ lb$
d) Determine the change in stringer axial loads (ΔP) between the two stations.	$\Delta P_i = P_i^{55} - P_i^{45}$ $\Delta P_1 = P_1^{55} - P_1^{45} = -11{,}000\ lb — (-9{,}000\ lb) = -2{,}000\ lb$ $\Downarrow$ $\Delta P_6 = P_6^{55} - P_6^{45} = -22{,}000\ lb — (-18{,}000\ lb) = -4{,}000\ lb$
e) Determine the changes in stringer axial loads (ΔP) on a per inch basis, to be used later in the open section shear flow (q') calculations. Δy is the distance between the two stations (10 in).	$\frac{\Delta P_1}{\Delta y} = \frac{-2{,}000\ lb}{10\ in} = -200\ lb/in$ $\Downarrow$ $\frac{\Delta P_6}{\Delta y} = \frac{-4{,}000\ lb}{10\ in} = -400\ lb/in$

Table A: Stringer axial loads

Stringer No.	f_b, psi (y=45 in)	f_b, psi (y=55 in)	P_i, lb (y=45 in)	P_i, lb (y=55 in)	ΔP_i, lb	ΔP/Δy, lb/in
1	-9,000	-11,000	-9,000	-11,000	-2,000	-200
2	-9,000	-11,000	-9,000	-11,000	-2,000	-200
3	9,000	11,000	9,000	11,000	2,000	200
4	9,000	11,000	9,000	11,000	2,000	200
5	9,000	11,000	18,000	22,000	4,000	400
6	-9,000	-11,000	-18,000	-22,000	-4,000	-400

Copyright 2016 Lockheed Martin Corporation.
Note: The current version is always the version on the Lockheed Martin network

f) Using the results of the stringer load calculations and Equation 6.5.7-4, determine the open section shear flows (q').

Assume that Webs 1 and 4 are the cut webs to create the open cells.

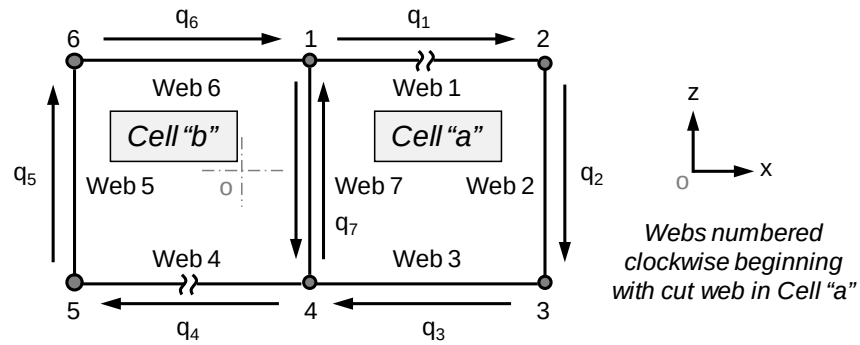

$$q'_i = \frac{\Delta P_i}{\Delta y}$$

$$q'_{i+1} = \frac{1}{\Delta y}(\Delta P_i + \Delta P_{i+1})$$

From the stringer load calculations in the previous step:

Cell "a"

$q'_1 = 0\ \ lb/in$ (cut web)

$q'_2 = -200\ lb/in$ (from Stringer 2)

$q'_3 = -200\ lb/in + 200\ lb/in = 0\ \ lb/in$

Center web, referenced to Cell "a":

$q'_7 = q'_3 + \frac{\Delta P_4}{\Delta y} = 0\ lb/in + 200\ lb/in = 200\ \ lb/in$ (Note $\frac{\Delta P_4}{\Delta y}$ is from Table A)

Cell "b"

$q'_4 = 0\ \ lb/in$ (cut web)

$q'_5 = 400\ lb/in$ (from Stringer 5)

$q'_6 = 400\ lb/in - 400\ lb/in = 0\ lb/in$

Center web, referenced to Cell "b":

$q'_7 = q'_6 + \frac{\Delta P_1}{\Delta y} = 0\ lb/in - 200\ lb/in = -200\ \ lb/in$ (Note $\frac{\Delta P_1}{\Delta y}$ is from Table A)

Table B: Open section shear flows

	Stringer Number	Web Number	ΔP/Δy, lb/in (1)	q'_i, lb/in
Cell "a"	1		-200	
		1		0
	2		-200	
		2		-200
	3		200	
		3		0
		7		200

(1) Carry-over from Step (e), Table A, shown for convenience

Copyright 2016 Lockheed Martin Corporation.
Note: The current version is always the version on the Lockheed Martin network

Table B: Open section shear flows (continued)

	Stringer Number	Web Number	ΔP/Δy, lb/in (1)	q_i', lb/in
Cell "b"	4		200	
		4		0
	5		400	
		5		400
	6		-400	
		6		0
		7		-200

(1) Carry-over from Step (e), Table A, shown for convenience

Note that the shear flows in each cell are positive when acting clockwise on the box at y=0. This is the case in all steps of the procedure.

g) Determine the individual closed areas of the cross section (A_i), to be used in Table B.

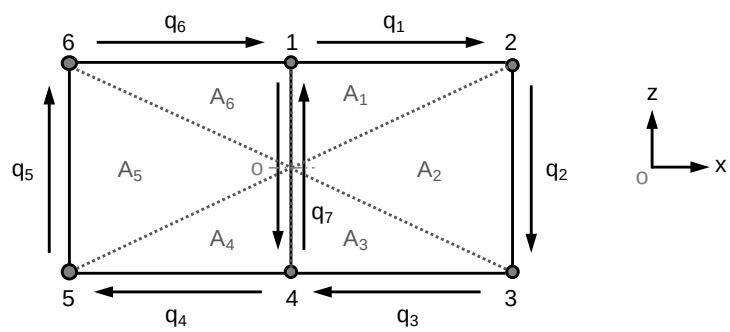

$$A_1 = A_3 = A_4 = A_6 = \frac{bh}{2} = \frac{10\ in(5\ in)}{2} = 25.0\ in^2$$

$$A_2 = A_5 = \frac{10\ in(10\ in)}{2} = 50\ in^2$$

$$A_{Cell\ a} = A_{Cell\ b} = 10\ in(10\ in) = 100\ in^2$$

Note that Web 7 has no contribution to the box torsion areas.

h) Assemble the terms for use in Equation 6.5.7-10.

These equations impose the condition of zero twist on the cross section due to external shear loading.

$$\left(\frac{\Delta s}{t}\right)_i = \left(\frac{l_{web}}{t_{web}}\right)_i$$

$$\left(\frac{\Delta s}{t}\right)_{1-4,6} = \frac{10\ in}{0.040\ in} = 250;\ \left(\frac{\Delta s}{t}\right)_5 = \frac{10\ in}{0.080\ in} = 125;\ \left(\frac{\Delta s}{t}\right)_7 = \frac{10\ in}{0.050\ in} = 200$$

Table C: Torsion due to open section shear flows
Cell "a"

Web No.	q_i', lb/in (1)	$\left(\frac{\Delta s}{t}\right)_i$	$q_i'\left(\frac{\Delta s}{t}\right)_i, lb/in$	$2A_i$ in^2	$2A_i q_i',\ in\text{-}lb$
1	0	250	0	50	0
2	-200	250	-50,000	100	-20,000
3	0	250	0	50	0
7	200	200	40,000	0	0
Sum		950	-10,000	200	

Copyright 2016 Lockheed Martin Corporation.
Note: The current version is always the version on the Lockheed Martin network

(1) Carry-over from Step (f), Table B, shown for convenience

Cell "b"

Web No.	q_i', lb/in (1)	$\left(\frac{\Delta s}{t}\right)_i$	$q_i'\left(\frac{\Delta s}{t}\right)_i, lb/in$	$2A_i$ in^2	$2A_i q_i', in\text{-}lb$
4	0	250	0	50	0
5	400	125	50,000	100	40,000
6	0	250	0	50	0
7	-200	200	-40,000	0	0
Sum		825	10,000	200	

(1) Carry-over from Step (f), Table B, shown for convenience

i) Impose the zero twist condition on the two cells using Equation 6.5.7-10. The values used are from the Table B.

For Cell "a", using Equation 6.5.7-10a:

$$\sum_{\text{a}} q_i'\left(\frac{\Delta s}{t}\right)_i + q_{as}\sum_{a}\left(\frac{\Delta s}{t}\right)_i - q_{bs}\left(\frac{\Delta s}{t}\right)_{a-b} = 0$$

$-10{,}000 + q_{as}(950) - q_{bs}(200) = 0$ (Note that $\left(\frac{\Delta s}{t}\right)_{a-b} = 200$, for Web 7)

For Cell "b", using Equation 6.5.7-10b:

$$\sum_{\text{b}} q_i'\left(\frac{\Delta s}{t}\right)_i + q_{bs}\sum_{b}\left(\frac{\Delta s}{t}\right)_i - q_{as}\left(\frac{\Delta s}{t}\right)_{a-b} = 0$$

$10{,}000 + q_{bs}(825) - q_{as}(200) = 0$

j) Determine the shear flows to impose the zero twist condition by solving the equations simultaneously.

$q_{as}(950) + q_{bs}(-200) = 10{,}000$
$q_{as}(-200) + q_{bs}(825) = -10{,}000$

$q_{as} = 6.6\ lb/in$
$q_{bs} = -18.6\ lb/in$

The superposition of these values and the open section shear flows (q_i') represent the shear flow distribution for the shear load acting at the cross section shear center. The effects of torsion must be added to obtain the final distribution.

k) Determine the value of the external torque acting about the cross section shear center, using Equation 6.5.7-11. The torsion due to open section shear flow ($\Sigma 2A_i q_i'$) is from Table B.

$T = T_o - \Sigma 2A_i q_i' - 2A_a q_{as} - 2A_b q_{bs}$
Where T_o is the torque about the reference point (o).
$T = 8{,}000\ lb(10\ in - 2\ in) - (-20{,}000\ in\text{-}lb + 40{,}000\ in\text{-}lb) - 200(6.6\ in\text{-}lb) - 200(-18.6\ in\text{-}lb)$
$T = 46{,}400\ in\text{-}lb$
Note that the section reference point does not coincide with the shear center.

Copyright 2016 Lockheed Martin Corporation.
Note: The current version is always the version on the Lockheed Martin network

l) Determine the shear flows due to pure torsion. This is done through solving the following equations simultaneously: 1. Use Equation 6.5.7-9 to equate the angle of twist for both cells. The values used are from the previous table.	Equate the angle of twist for the two cells: $\frac{q_{at}}{A_a}\sum_a\left(\frac{\Delta s}{t}\right)_i - \frac{q_{bt}}{A_a}\left(\frac{\Delta s}{t}\right)_{a-b} = \frac{q_{bt}}{A_b}\sum_b\left(\frac{\Delta s}{t}\right)_i - \frac{q_{at}}{A_b}\left(\frac{\Delta s}{t}\right)_{a-b}$ $\frac{q_{at}}{100\ in^2}(950) - \frac{q_{bt}}{100\ in^2}(200) = \frac{q_{bt}}{100\ in^2}(825) - \frac{q_{at}}{100\ in^2}(200)$ $q_{at}(9.5) + q_{bt}(-2.0) = q_{bt}(8.25) + q_{at}(-2.0)$ $q_{at}(11.5) + q_{bt}(-10.25) = 0 \quad \leftarrow$[1]
2. Use Equation 6.5.7-12 to equate the externally applied torque and the sum of the torques in each cell.	Equate the externally applied torque to the sum of the torques in each cell: $T = 2A_a q_{at} + 2A_b q_{bt}$ $T = 46{,}400\ in\text{-}lb$, from above $(200)q_{at} + (200)q_{bt} = 46{,}400\ in\text{-}lb \quad \leftarrow$ [2] Solving [1] and [2] simultaneously: $q_{at} = 109.3\ lb/in$ $q_{bt} = 122.7\ lb/in$ These are the shear flows in each cell due to pure torsion loading.
m) Use Equation 6.5.7-13 to determine the final shear flow distribution for the beam. *These values are the superposition of the direct shear and torsion components.*	For Webs 1-3 (Cell "a"), using Equation 6.5.7-10a: $q_i = q_i' + q_{as} + q_{at}$ $q_1 = 0 + 6.6\ lb/in + 109.3\ lb/in = 115.9\ lb/in$ $q_2 = -200\ lb/in + 6.6\ lb/in + 109.3\ lb/in = -84.10\ lb/in$ $q_3 = 0 + 6.6\ lb/in + 109.3\ lb/in = 115.9\ lb/in$ For Webs 4-6 (Cell "b"), using Equation 6.5.7-10b: $q_i = q_i' + q_{bs} + q_{bt}$ $q_4 = 0 - 18.6\ lb/in + 122.7\ lb/in = 104.1\ lb/in$ $q_5 = 400\ lb/in - 18.6\ lb/in + 122.7\ lb/in = 504.1\ lb/in$ $q_6 = 0 - 18.6\ lb/in + 122.7\ lb/in = 104.1\ lb/in$ For Web 7 (Web "a-b"), using Equation 6.5.7-10c: $q_i = q_i' + q_{as} + q_{at} - q_{bs} - q_{bt}$ $q_7 = 200\ lb/in + 6.6\ lb/in + 109.3\ lb/in - (-18.6\ lb/in) - 122.7\ lb/in$ $q_7 = 211.8\ lb/in$, relative to Cell "a". Alternatively, for Web 7 (Web "a-b"), using Equation 6.5.7-10c: $q_i = q_i' - q_{as} - q_{at} + q_{bs} + q_{bt}$ $q_7 = -200\ lb/in - 6.6\ lb/in - 109.3\ lb/in + (-18.6\ lb/in) + 122.7\ lb/in$ $q_7 = -211.8\ lb/in$, relative to Cell "b". <u>Table D: Final Shear Flows</u>: Cell "a"

Web No.	q_i', lb/in (1)	q_{as}, lb/in (2)	q_{at}, lb/in (3)	q_i, lb/in
1	0	6.6	109.3	115.9

Copyright 2016 Lockheed Martin Corporation.
Note: The current version is always the version on the Lockheed Martin network

2	-200	6.6	109.3	-84.1
3	0	6.6	109.3	115.9
7	200	6.6	109.3	211.8

Cell "b"

Web No.	q_i', lb/in (1)	q_{bs}, lb/in (2)	q_{bt}, lb/in (3)	q_i, lb/in
4	0	−18.6	122.7	104.1
5	400	−18.6	122.7	504.1
6	0	−18.6	122.7	104.1
7	-200	−18.6	122.7	-211.8

(1) Carry-over from Step (f), Table B, shown for convenience
(2) Carry-over from Step (j)
(3) Carry-over from Step (l)

n) The component and total shear flows acting on the beam segment are shown, as well as the axial loads developed in the stringers.

Again, some form of perspective sketch is required to understand the directions of the internal loads acting on the box beam.

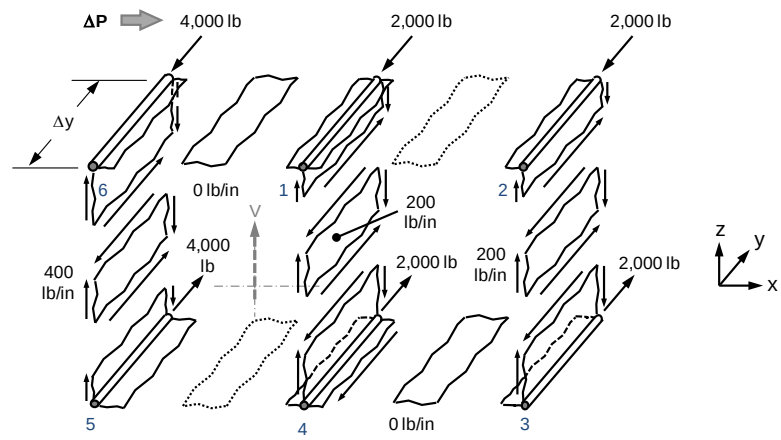

Stringer Axial Load Buildup (ΔP) from Table A and Open Section Shear Flows (q') from Table B

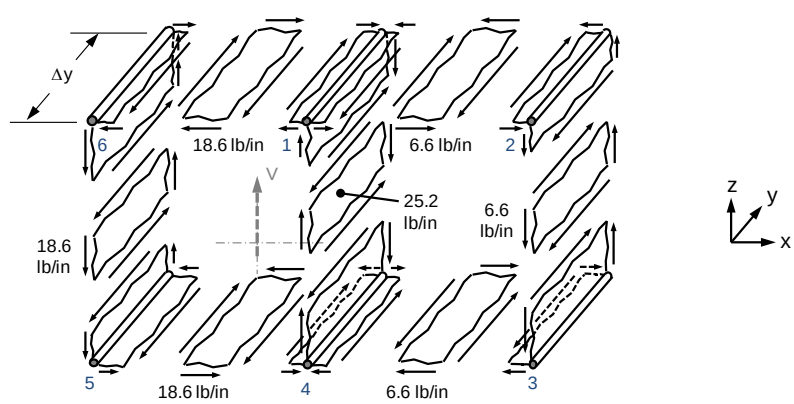

Shear Flows to Maintain Zero Twist under Shear Loading (q_{as}, q_{bs}) from Step (j)

Copyright 2016 Lockheed Martin Corporation.
Note: The current version is always the version on the Lockheed Martin network

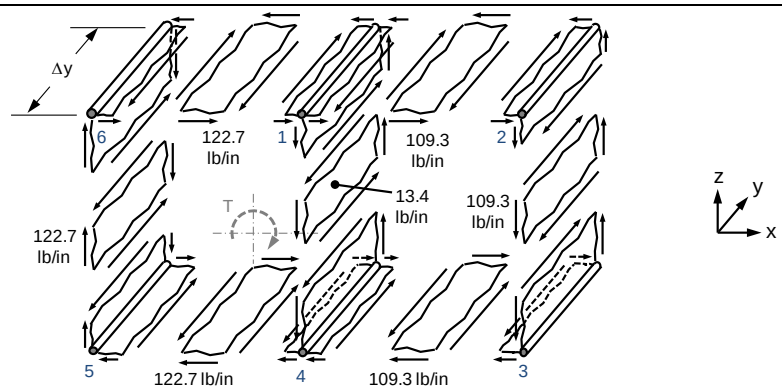

Shear Flows due to Torsion (q_{at},q_{bt}) from Step (l)

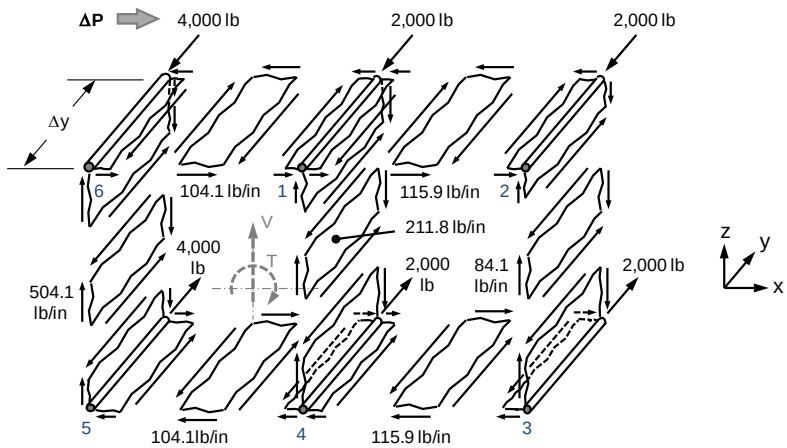

Stringer Axial Load Buildup (ΔP) from Table C and Final Shear Flow Distribution (q) from Table D

Copyright 2016 Lockheed Martin Corporation.
Note: The current version is always the version on the Lockheed Martin network

6.6 Shear Beams

The design approach for beams loaded in shear falls into one of two categories:

1. Shear resistant, where the webs are unbuckled to Ultimate load.
2. Diagonal tension beams, where the webs buckle at some load level below Ultimate. These are often referred to as Post-Buckled beams.

Diagonal tension beams are usually classified either as intermediate or pure tension field beams, depending on the degree of web post-buckling.

The behavior of the web in the various shear beam configurations is shown in Figure 6.6-1. For the shear resistant beam shown in Figure (a), the web tensile and compressive stresses are equal to the web shear stress, as would be seen in a shear-only plot using Mohr's Circle. For the intermediate diagonal tension beam shown in Figure (b), the web is buckled at some load level. In this case, the tensile stress exceeds the compression stress, since the web can only carry the compression load up to the buckling point. Additional load beyond this point is carried in tension only. For the pure diagonal tension beam shown in Figure (c), the web is assumed to have no compression resistance whatsoever and all loads are carried in tension only. Thus, the shear resistant and pure diagonal tension webs are the limiting cases in shear beam design. Since the pure diagonal tension web is never truly achieved in practice, it is an assumption sometimes made for analysis simplicity.

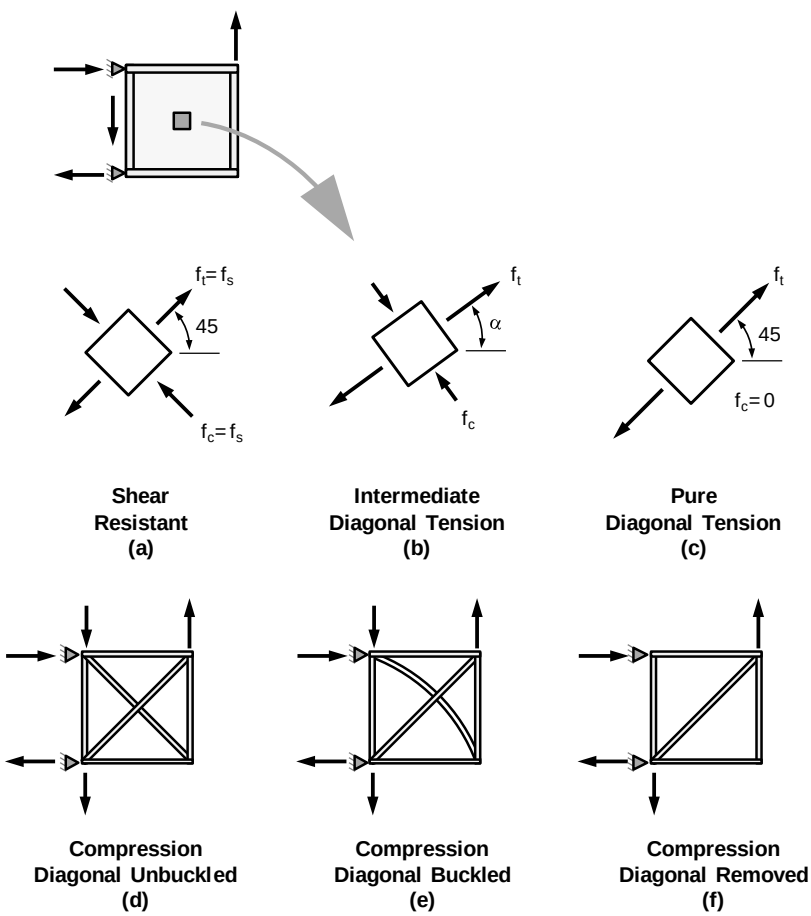

Figure 6.6-1: Shear Resistant and Diagonal Tension Beam Configurations

Copyright 2016 Lockheed Martin Corporation.
Note: The current version is always the version on the Lockheed Martin network.

Figures 6.6-1 (d) through (f) show a simplified model representing beam configurations (a) through (c), assuming the beam web is replaced by a pin-jointed truss. In the shear resistant case (d), all shear load in carried by the truss diagonals, which are fully effective. In the intermediate diagonal tension case (e), all shear load is carried by the truss diagonals up to the point which the compression diagonal buckles as a column. The compression load in the buckled column is maintained, with additional shear load carried by the tension diagonal only. In the pure diagonal tension case (f), the compression diagonal is removed, with all shear load carried by the tension diagonal.

The bending and shear stresses for machined and most[1] built-up beams may be determined using Equations 6.2.2-1 and 6.5.1-1:

$$f_{b,i} = \frac{My_i}{I}$$

Reference Equation 6.2.2-1

$$f_{s,i} = \frac{VQ_i}{Ib_i}$$

Reference Equation 6.5.1-1

Where the subscript "i" denotes the location on the cross section under consideration.

Often the beam stresses are approximated by assuming that the web carries shear only and the flanges react all bending moment as a couple. The flange axial stresses are then given by Equation 6.6-1:

$$P_{ax} = \frac{M}{h_e}$$

Equation 6.6-1

$$f_{ax} = \frac{P_{ax}}{A_f}$$

Where:
P_{ax} is the flange axial load (lb)
f_{ax} is the flange axial stress (psi)
M is the beam bending moment (in-lb)
h_e is the beam height between flange centroids (in), per Figure 6.5.5-1
A_f is the flange area (in^2)

The average shear stress in the web is given by Equation 6.5.5-1:

$$q = \frac{V}{h_e}$$

Reference Equation 6.5.5-1

$$f_s = \frac{q}{t}$$

The approximate stresses from Equations 6.5.5-1 and 6.6-1 are acceptable with most common beam configurations. Figures 6.6-2 and 6.6-3 compare the exact and approximate solutions of bending and shear stress for a variety of beam configurations. When performing the beam strength analyses, these figures may be useful to determine whether exact solutions for bending and shear stress are warranted.

In the bending stiffness comparison of Figure 6.6.2, $f_{b,max}$ and f_{ax} are calculated using Equations 6.2.2-1 and 6.6-1. In the shear stiffness comparison of Figure 6.6.3, $f_{s,max}$ and f_s are calculated using Equations 6.5.1-1 and 6.5.5-1.

[1] Per Reference 6-33, if the beam flanges are overly stiff and web-to-flange attachments are overly flexible, errors are introduced through the use of Equations 6.2.2-1 and 6.5.1-1. To ensure adequate joint stiffness, yielding of the attachments should be checked, particularly when rivets are used.

Copyright 2016 Lockheed Martin Corporation.
Note: The current version is always the version on the Lockheed Martin network.

Examples 6.6.1.17 and 6.6.1.18 use the exact and approximate solutions, respectively, in the strength analyses for a shear resistant beam.

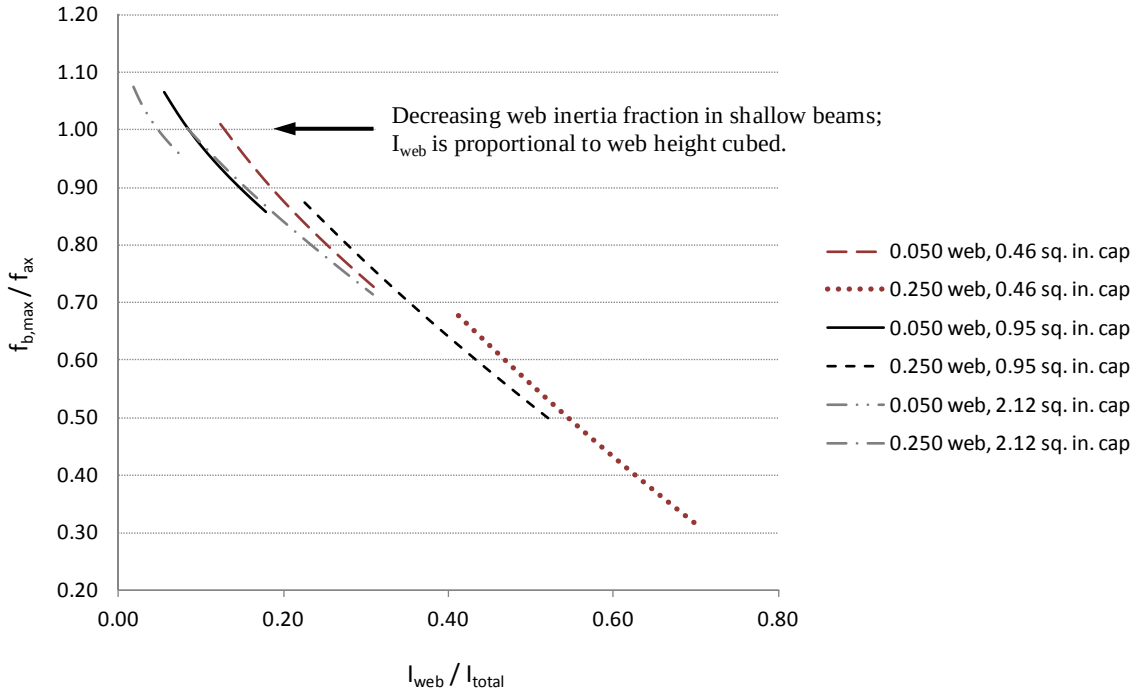

Figure 6.6-2: Ratio of Beam Bending to Axial Stress vs. Web Stiffness Fraction

It is seen from Figure 6.6-2 that the beam bending stress exceeds the flange axial stress from Equation 6.6-1 only when the stiffness contribution from the web is at the lower end of the data range. Because the web bending stiffness is proportional to its height cubed, the approximate bending solution is slightly unconservative for beams of shallow height. This is particularly true if the cap thicknesses themselves are a significant portion of the beam height.

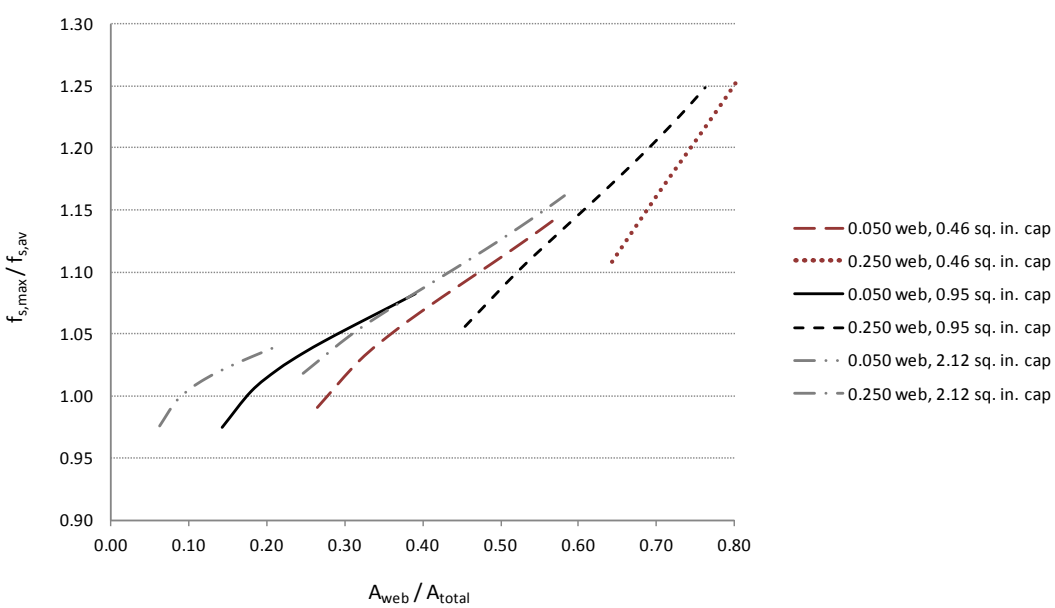

Figure 6.6-3: Ratio of Web Maximum to Average Shear Stress vs. Web Stiffness Fraction

Copyright 2016 Lockheed Martin Corporation.
Note: The current version is always the version on the Lockheed Martin network.

It is seen from Figure 6.6-3 that the maximum web shear stress (at the neutral axis) exceeds the average shear stress for the majority of the data range. The approximate solution becomes increasingly unconservative as the web area becomes a larger portion of the beam total. Since the critical strength location is often away from the neutral axis where web shear and bending stresses combine, use of the average shear stress is usually acceptable in the strength interaction equations. The maximum shear stress should be checked at the neutral axis using Equation 6.5.1-1.

The most weight-efficient beam configuration is one in which nearly all of the moment resistance is provided by the flanges and the web may be assumed to carry shear only, as described above. This configuration is best achieved by making the radius of gyration of the beam section as large as possible, which concentrates the bending stiffness near the beam extreme fibers.

Weight Efficiency: Reference 6-33 suggests the following guidelines when choosing between shear-resistant and diagonal tension beam configurations to achieve minimum weight:

$$\frac{q}{h_e} < 49, \text{ Use diagonal tension design}$$
$$\frac{q}{h_e} > 121, \text{ Use shear resistant design}$$

Equation 6.6-2

Between the ranges shown, the beam type will be chosen based on some criterion other than weight.

Although in most applications, shear resistant beams usually have reduced weight efficiency when compared with diagonal tension beams, their use is fairly common. In particular, tactical aircraft often utilize shallow, machined structure for which post-buckled design may be neither practical nor weight advantageous. These structures may contain web penetrations or have minimum machining gages which preclude post-buckled design. Shear resistant beam configurations may also result from specific program requirements or design criteria. Wherever possible, advantage should be taken of post-buckled design to reduce weight.

The following sections present the strength analysis methods required in the design of shear resistant and diagonal tension beams.

6.6.1 Shear Resistant Beams

As stated above, the most weight-efficient beam is configured such that the webs have minimal contribution to the overall bending stiffness. To achieve this, web thicknesses must be kept to a minimum, with the required buckling resistance obtained through the use of stiffeners, not increased web thickness.

In configurations where webs do make an appreciable contribution to the overall beam bending stiffness, they must be included in the section property calculations and thus carry loads in the spanwise direction[1]. These loads act in addition to the web shear and any loads that may exist through the beam height. In shear resistant beams, stiffeners serve primarily to set panel size, act as load introduction points and react crushing loads due to curvature. Where they exist, lateral pressure loads also cause bending of the stiffeners.

The strength and stability analyses for a shear resistant beam must include the checks listed in Table 6.6.1-1.

[1] If the beam internal loads basis is a finite-element model, the axial stiffness of the web shell elements contribute to the beam bending stiffness; this contribution is included in the web internal loads recovery.

Copyright 2016 Lockheed Martin Corporation.
Note: The current version is always the version on the Lockheed Martin network.

Table 6.6.1-1: Required Strength and Stability Analyses for a Shear-Resistant Beam

(Reference Figure 6.6.1-1 for location diagram)

Item	Location	Required Check	Applied Load[1]	Notes
1	Web	Initial buckling	All in-plane load components for stability critical cases	Neglect lateral pressure effects
2	Web	Strength	All in-plane load components plus local bending due to pressure	Include lateral pressure effects
3	Flange	Strength	Axial load plus any local bending effects due to pressure, pull-off loading, etc.	Multiple locations must be checked
4	Flange	Crippling	Axial compression load plus any strong-axis bending moment	Effective skin and web may be included
5	Flange	Initial buckling	Axial compression load plus any strong-axis bending moment	Not applicable where flange is attached to skin
6	Flange / Skin	Inter-rivet buckling	Axial compression load plus any strong-axis bending moment	Effective skin and web may be included
7	Stiffener	Strength	Axial load plus local bending due to pressure	Effective web may be included. Include lateral pressure effects
8	Stiffener	Crippling	Axial compression load plus local bending due to pressure	Effective web may be included. Include lateral pressure effects
9	Stiffener outstanding leg	Initial buckling	Axial compression load plus local bending due to pressure	Effective web may be included in stress calculations. Include lateral pressure effects
10	Stiffener	Required inertia	None	Stiffener must meet minimum inertia requirements to stabilize panel edge
11	Web-to-flange attachments	Joint strength	All in-plane load components	Include lateral pressure effects
12	Flange-to-skin attachments	Joint strength	Shear transfer plus axial load due to pull-off	Include lateral pressure effects
13	Stiffener termination splice	Joint strength	All in-plane load components	Include lateral pressure effects
14	Load introduction splices	Joint strength	All in-plane load components	Include lateral pressure effects
15	Miscellaneous manufacturing splices	Joint strength	All in-plane load components	Include lateral pressure effects

[1] May include thermal load components, if applicable.

Copyright 2016 Lockheed Martin Corporation.
Note: The current version is always the version on the Lockheed Martin network.

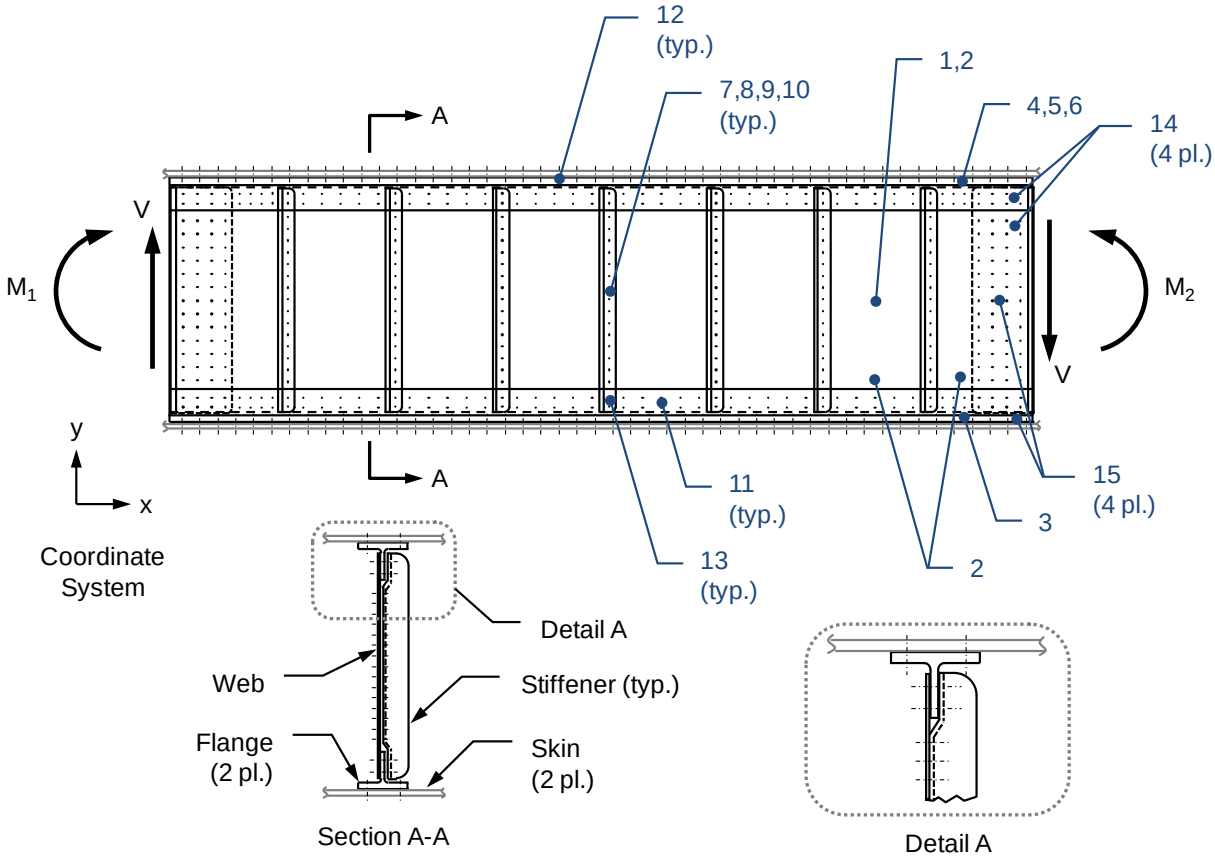

Figure 6.6.1-1: Required Strength and Stability Analyses Locations for a Shear-Resistant Beam
(Locations shown are critical for loading shown)

The analysis procedures for Items 1 through 15 in Table 6.6.1-1 are developed in Sections 6.6.1.1 through 6.6.1.15. Note that the item number corresponds with the trailing section numbers and the locations shown in Figure 6.6.1-1.

<u>For beams which include machined parts, the following should be noted</u>:

1. The strength analysis must include the thickness tolerance as described in Section 2.6.2. *This may require that the thickness used in the analysis is less than nominal*.
2. The minimum machining gages should be established early in the sizing process and must be reflected in the strength and stiffness calculations. Minimum gages are given in Reference 6-32.
3. In fully machined beams, joint strength analyses per Items 11-15, Table 6.6.1-1 may selectively apply based on the configuration.

Copyright 2016 Lockheed Martin Corporation.
Note: The current version is always the version on the Lockheed Martin network.

6.6.1.1 Web Stability Analysis

The web stability analysis may be performed using one of the following methods:

1. The buckling interaction equations given in Section 10.3.2[1]
2. The SO0 program in the IDAT tool suite
3. The SS8 program in the IDAT tool suite
4. NASTRAN Solution 105 FEM, which may include use of the POPPI pre-processor

Note that Items 3 and 4 above are elastic buckling solutions. *If the elastic buckling stress exceeds the material proportional limit, a plasticity correction is required per Section 10.3.1.2.*

Note that a NASTRAN Solution 106 FEM does not replace the web buckling solution. While the Solution 106 may be required for strength analyses, *it should not be assumed that the structure is unbuckled merely because the finite-element solution reaches convergence. This is true even if the FEM includes material stress-strain data.*

Regardless of the method used, all applicable components of load must be included in the stability analysis, which may include the effects of thermal loading. It is customary to conservatively neglect any web membrane loads resulting from pressure. As in the web strength analysis, if internal loads are obtained from a finite-element model, it must be sufficiently de-idealized to reflect the bending distribution in the web.

Web stability analyses must adhere to the buckling criteria given in Section 10.3.1.3.

Web Boundary Conditions: Panel edge fixities should be established per Section 10.3.1.3. In built-up beams, it is assumed that stiffeners are attached to the flanges at their termination, as shown in Figure 6.6.1-1, Detail A. If this attachment does not exist, the web may buckle through the stiffener (i.e. a panel node may not be enforced). *The ends of each stiffener must attach to a flange with at least one fastener or rivet; if not, the methods presented in this section do not apply.*

6.6.1.2 Web Strength Analysis

The web strength analysis is done using the combined stress equations given in Section 2.5.4. All applicable components of load must be used, which may include the effects of normal pressure and thermal loading. If internal loads are obtained from a finite-element model, it must be sufficiently de-idealized to reflect the bending distribution at the critical locations, as well as any peaking effects.

Webs without pressure: Using the beam shown in Figure 6.6.1-1 as an example, the critical locations for web strength in a given panel will be along a line between Points A and B, shown in Figure 6.6.1-2. Between these points, the net web area is used in the stress calculations. Note that this beam is loaded in shear and bending only; the critical web location may be the point of max shear, bending or a point between the two. For most loadings, it is usually sufficient to perform the analysis at Points A and B, conservatively using the average panel shear stress. The stress in the y-direction is compressive and results from beam curvature, where it is appreciable. This stress is developed using the methods given in Section 6.2.5, where the curvature is obtained using the beam deflection. The crushing loads due to curvature are usually included in the strength analysis of wing box sections, control surfaces, etc. It is often assumed that these loads are carried by the stiffeners, with effective web skin included in the stress calculations. *Note that since these loads are a function of deflected position, they are not captured in a linear-static FEM solution.*

[1] To determine the web buckling stresses for the individual load components, use either the provided curves in Section 10.3.2 or the SM33 program in the IDAT tools suite.

Copyright 2016 Lockheed Martin Corporation.
Note: The current version is always the version on the Lockheed Martin network.

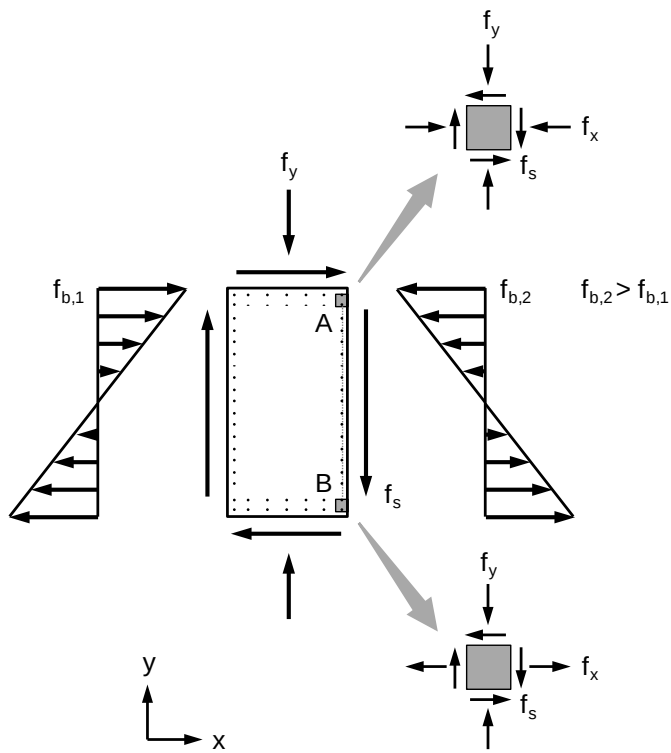

Figure 6.6.1-2: Critical Web Strength Locations for a Shear-Resistant Beam Panel
(Applied loading is shear and bending only)

Webs with pressure: When webs are subject to normal pressure, membrane and bending stresses result[1] and must be superimposed onto the stresses shown in Figure 6.6.1-2. Because the stresses due to pressure are critical at different locations than those due to shear and bending alone, additional points must be considered in the strength analysis.

For a web loaded by pressure only, one of two locations will be critical for strength, depending on the boundary conditions:

1. Webs with simply supported edges are critical at the center
2. Webs with fixed edges are critical at the center of the long edge

These locations are shown in Figure 6.6.1-3.

[1] In the bounding cases, either the membrane or bending stresses may approach zero; the methods given in Section 10.5 account for this variation and may be used in all cases. It is not necessary to determine panel deflections prior to the calculation of web stresses.

Copyright 2016 Lockheed Martin Corporation.
Note: The current version is always the version on the Lockheed Martin network.

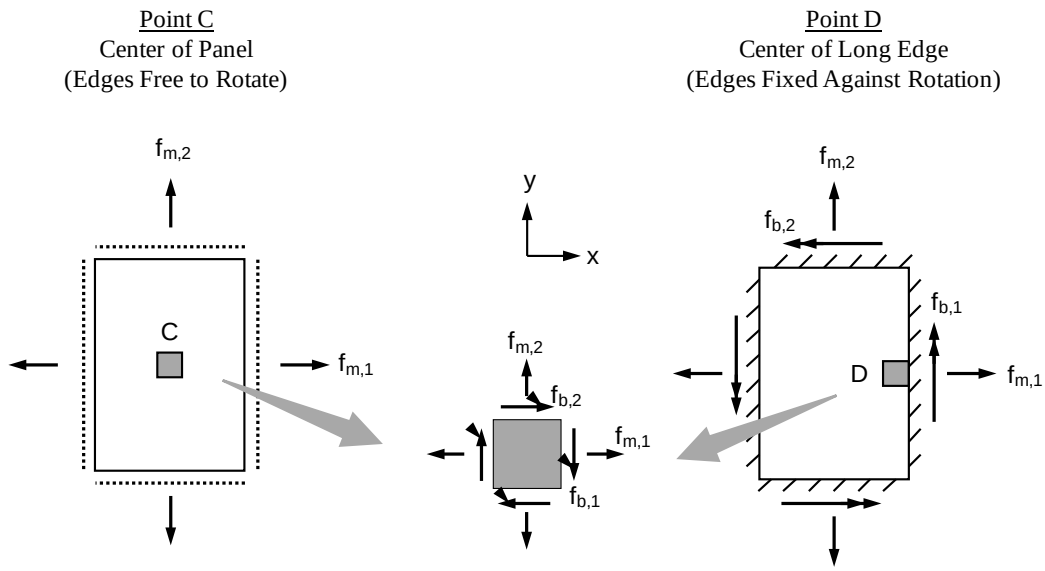

$f_{m,1}$ is the panel membrane stress, psi

$f_{b,1}$ is the panel bending stress, psi

$f_{m,2} = \nu\, f_{m,1}$ (Point C only, if fixed against translation)

$f_{b,2} = \nu\, f_{b,1}$ (Point C only)

Figure 6.6.1-3: Critical Web Strength Locations for Pressure Loading

In actual structure, web edges are usually neither simply supported nor clamped. Because the true edge fixity is difficult to accurately determine, the web strength analysis uses overlapping assumptions. The total stress at a point consists of membrane and bending components, which vary at the two critical locations on the web, as shown in Figure 6.6.1-3. Note that the membrane and bending stresses in the normal (y) direction are due to Poisson's effect, as shown.

Calculation of the web stresses may be performed using one of the following methods:

1. The methods developed in Section 10.5
2. The PRESS program in the IDAT tool suite
3. NASTRAN Solution 106 FEM

Note: Air-vehicle FEM solutions sometimes include bay pressures in the applied loads set and almost exclusively use a linear-static solution sequence (i.e., NASTRAN Sol. 101). *In this case, the axial and bending components of the web internal loads do not reflect any large-displacement behavior and should not be used directly in the strength analysis.*

Several locations must be considered in the web strength analysis, each having different load combinations. Care must be taken to ensure the critical location and loading are used.

6.6.1.3 Flange Strength Analysis

Generalized free body diagrams for flanges attached to continuous and discontinuous skins are shown in Figure 6.6.1-4. When attached to continuous skin (Figure 6.6.1-4 (a)), the loads acting on the flange are due to axial load, web shear and pull-off loading. When attached to discontinuous skins (Figure 6.6.1-4 (b)), the flange additionally acts as a skin splice, transferring axial and shear loads between skins.

Copyright 2016 Lockheed Martin Corporation.
Note: The current version is always the version on the Lockheed Martin network.

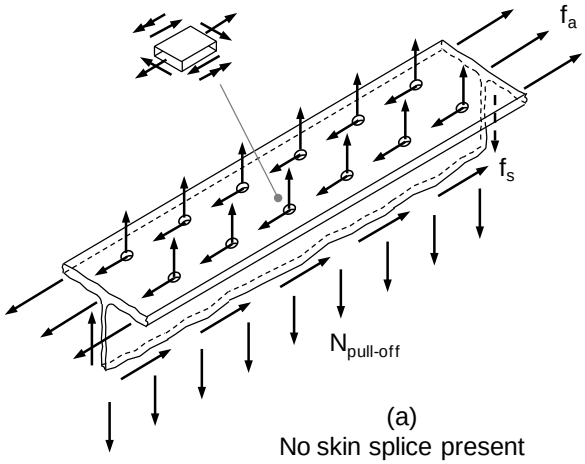

(a)
No skin splice present

f_a= axial stress
f_s= shear stress
$N_{pull\text{-}off}$ = web pull-off load intensity (lb/in)

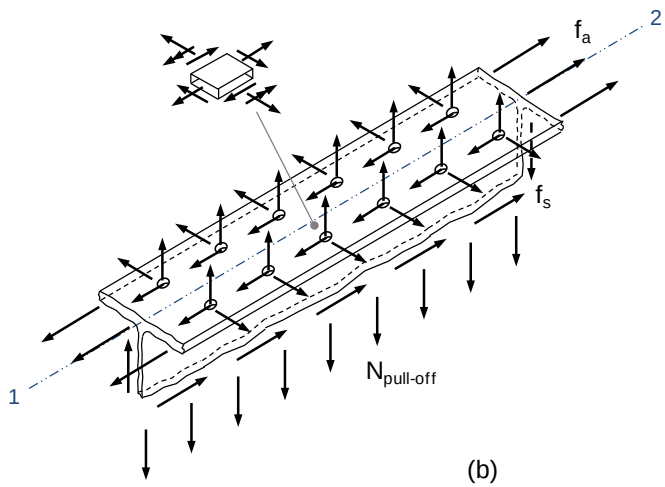

(b)
Skin splice along Line 1-2

Figure 6.6.1-4: Loads Acting on Flange at Skin Attachment
(Skin Not Shown)

If the flange is subject to axial and shear loads only (no pull-off), the strength analysis is done using the interaction expression given in Equation 6.6.1-1, obtained from Table 2.5.4-1:

$$MS = \frac{1}{\sqrt{{R_a}^2 + {R_s}^2}} - 1$$ **Equation 6.6.1-1**

Where:
MS is the Ultimate Margin of Safety
R_a is the axial stress ratio (may be tensile or compressive)
R_s is the shear stress ratio

The Ultimate shear strength for use in Equation 6.6.1-1 is described in Section 3.3.3.3.

Copyright 2016 Lockheed Martin Corporation.
Note: The current version is always the version on the Lockheed Martin network.

Where skin pull-off loads exist, the flange is subject to axial, shear and bending loads. In this case the strength analysis requires use of the interaction expressions given in Section 2.5.4. Multiple locations on the flange may require strength evaluation, depending on the configuration of the skin attachments.

The flange bending analysis may be performed using one of the following methods:

1. The traditional cantilever solution given in Section 5.3.5.1
2. The SM89 empirical solution given in Section 5.3.5.2
3. The FLANGE program in the IDAT tool suite as described in Section 5.3.5.3
4. NASTRAN Solution 101 or 106 FEM

Note: Above Limit load, the allowable flange bending moment may include plasticity, if permitted by program policy. Detrimental deformation criteria must be adhered to where applicable. Plastic bending methods are described in Section 6.3.

With integrally machined structure, stiffeners provide some level of flange restraint at their intersections, as shown in Figure 6.6.1-5. The level of restraint is a function of flange width (b), thickness (t) and stiffener spacing (s). In some configurations, neglecting the stiffeners in the flange bending check results in stresses which may be overly conservative. If it is desired to remove this conservatism, a small 2D FEM of the flange, which includes the support geometry, is recommended.

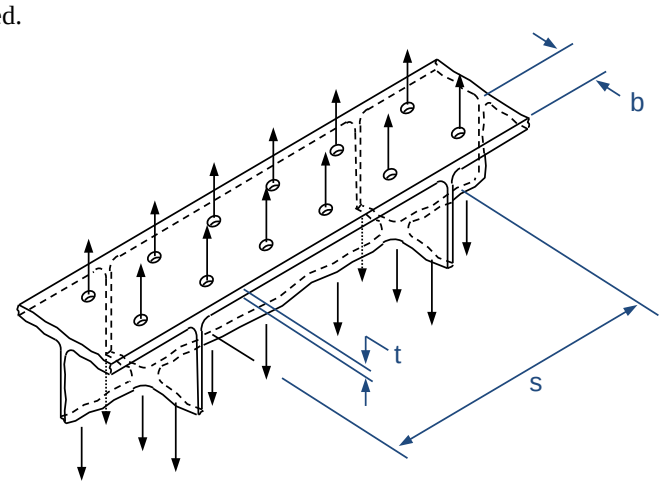

Figure 6.6.1-5: Effect of Stiffeners on Flange Bending for Integrally Machined Beam

Note: If flange stresses are obtained from any 3D solid FEM where fillets or other features are modeled, care must be used to ensure that the stresses do not include geometric stress concentrations. This is often the case when the FEM is built directly from a CATIA solid. Raised stresses are not appropriate in a static strength analysis and thus cannot be used as-is from the FEM results. Manipulation is sometimes required to remove stress concentration effects prior to calculation of the strength margins of safety.

6.6.1.4 Flange Crippling Analysis

The flange crippling analysis is done using the methods given in Section 8.4. For built-up sections, the allowable crippling load is calculated for the beam flange (cap) alone. The attached skin and web are checked for inter-rivet buckling as applicable. Note that it is good design practice to set the fastener spacing such that the inter-rivet buckling stresses are approximately the same as the crippling stress of the cap, maintaining a minimum of 4D (or program policy minimums). For integrally machined beams, a portion of effective web is included in the crippling calculation. When including effective material from integral structure in the crippling calculation, *the total compressive load for all elements must be used*. The areas used in the crippling calculations for built-up and machined beams are shown in Figure 6.6.1-6.

Copyright 2016 Lockheed Martin Corporation.
Note: The current version is always the version on the Lockheed Martin network.

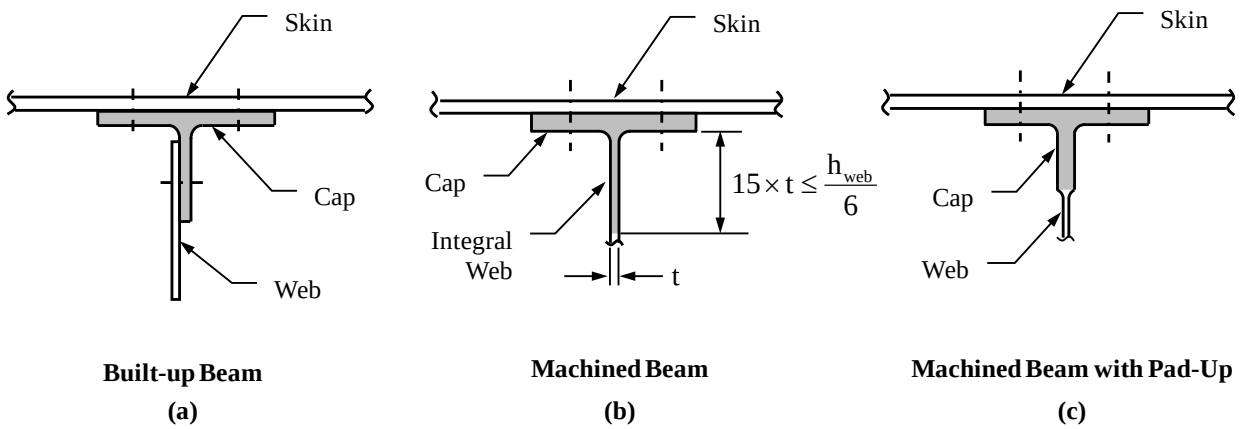

Figure 6.6.1-6: Beam Cap Areas used in Crippling Load Calculations

For shallow beams loaded by axial and bending loads, significant gradients in compression stress may exist through the height of the effective crippling section. In this case, it is recommended that the applied compression load reflect the true stress level for each individual portion of the section; an example is shown in Figure 6.6.1-7.

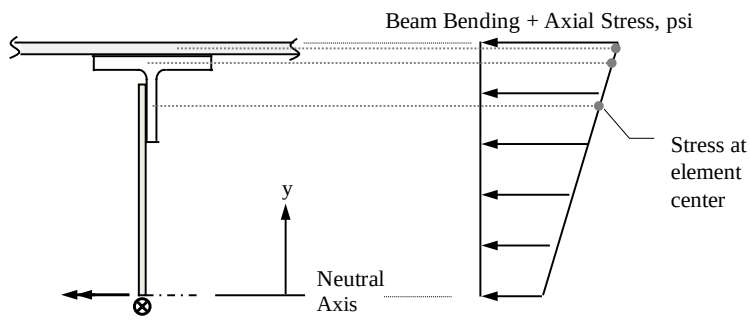

Figure 6.6.1-7: Flange Crippling Analysis – Stress Gradient in a Shallow Beam

In some cases, where the flange is not supported by skin, bending of the flange about its strong axis may occur. The allowable crippling stress for this condition is given in Section 8.4.2.5.

6.6.1.5 Flange Stability Analysis

The flange stability analysis is done using the methods given in Section 10.3. It is required that the flanges remain unbuckled to Ultimate load. The buckling load is always calculated for the flange alone. Two cases are possible:

1. The flange is not attached to skin, or, the attached skin is of insignificant bending stiffness[1]. In this case the skin is neglected and the stability analysis is performed as described below, shown in Figure 6.6.1-8.
2. The flange is attached to a skin of significant bending stiffness. In this case the flange stability analysis is not performed.

For built-up beams of the configuration shown in Figure 6.6.1-1, where the flanges are not directly attached to the stiffeners, Figure 10.3.2-1 is used to determine k_c. The minimum value is used ($k_c = 0.429$) which corresponds to a compression-loaded plate with three sides simply supported and one edge free, for a/b > 5.0.

[1] It is suggested that the skin stiffness be considered insignificant if $(EI)_{skin} \leq 10(EI)_{flange}$.

Copyright 2016 Lockheed Martin Corporation.
Note: The current version is always the version on the Lockheed Martin network.

For machined or built-up beams with direct stiffener attachments, Figure 10.3.2-1 is used to determine k_c using the three sides simply supported and one edge free curve, with the appropriate value of a/b.
The dimensions used in the flange stability analysis are shown in Figure 6.6.1-8 for reference.

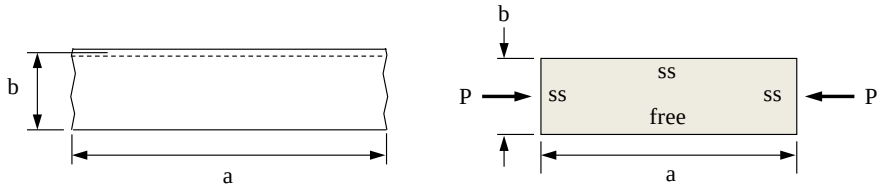

No Direct Stiffener Attachments: a/b > 5

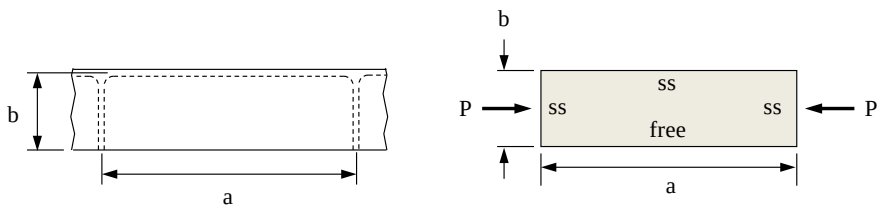

Direct Stiffener Attachments: a/b as Measured

Figure 6.6.1-8: Flange Stability Analysis – Panel Idealizations

6.6.1.6 Skin Inter-Rivet Buckling Analysis

When the beam section includes effective skin and web, they must be checked at the flange attachments for inter-rivet buckling using the methods given in Section 8.6.

6.6.1.7 Stiffener Strength Analysis

Beam stiffeners serve four primary functions, to:

1. Act as panel breakers to reduce bay sizes for web stability.
2. Carry axial compressive loads due to beam curvature. In an initially straight beam the curvature is due to deflection.
3. Introduce in-plane applied point loads to the beam web.
4. Carry out-of-plane loads to the flanges and skins where the beam webs are loaded by pressure.

For beams subject to in-plane loading only, the stiffener strength analysis is done using the axial loading alone. The crushing loads due to curvature (Item 2 above) must be included and may be calculated using the methods given in Section 6.2.5.
For beams subject to in-plane loading and web pressure, the strength analysis uses the stiffener axial load in addition to transverse shear and bending loads. The bending moments due to web pressure are dependent upon the surface area over which the pressure acts. In a hand analysis, the stiffener is treated as a simply-supported[1] beam with a span equal to the distance between flange attachments. Two commonly used areas are shown in Figure 6.6.1-9; note that program policy may dictate this assumption. Note that the hand analysis is a conservative approximation of the true behavior, in which the pressure results in membrane action of the beam web. Here, the stiffeners act as supports at the panel edges. Due to the complexities of performing such an analysis, a non linear FEM is recommended if the true action is desired for test correlation, etc. In typical strength analyses and sizing, the hand method is recommended.

[1] Bending analysis at the stiffener mid span always assumes simple supports. At the stiffener ends, moments may exist as described in Section 6.6.1-13.

Copyright 2016 Lockheed Martin Corporation.
Note: The current version is always the version on the Lockheed Martin network.

In all cases the stiffener axial load may include thermal components as applicable.

Whether a built-up or integrally machined beam, effective web is usually included in the stiffener strength analysis, as shown in Figure 6.6.1-9. *Note that the total axial load used in the strength analysis must include any contribution from the web, if applicable.*

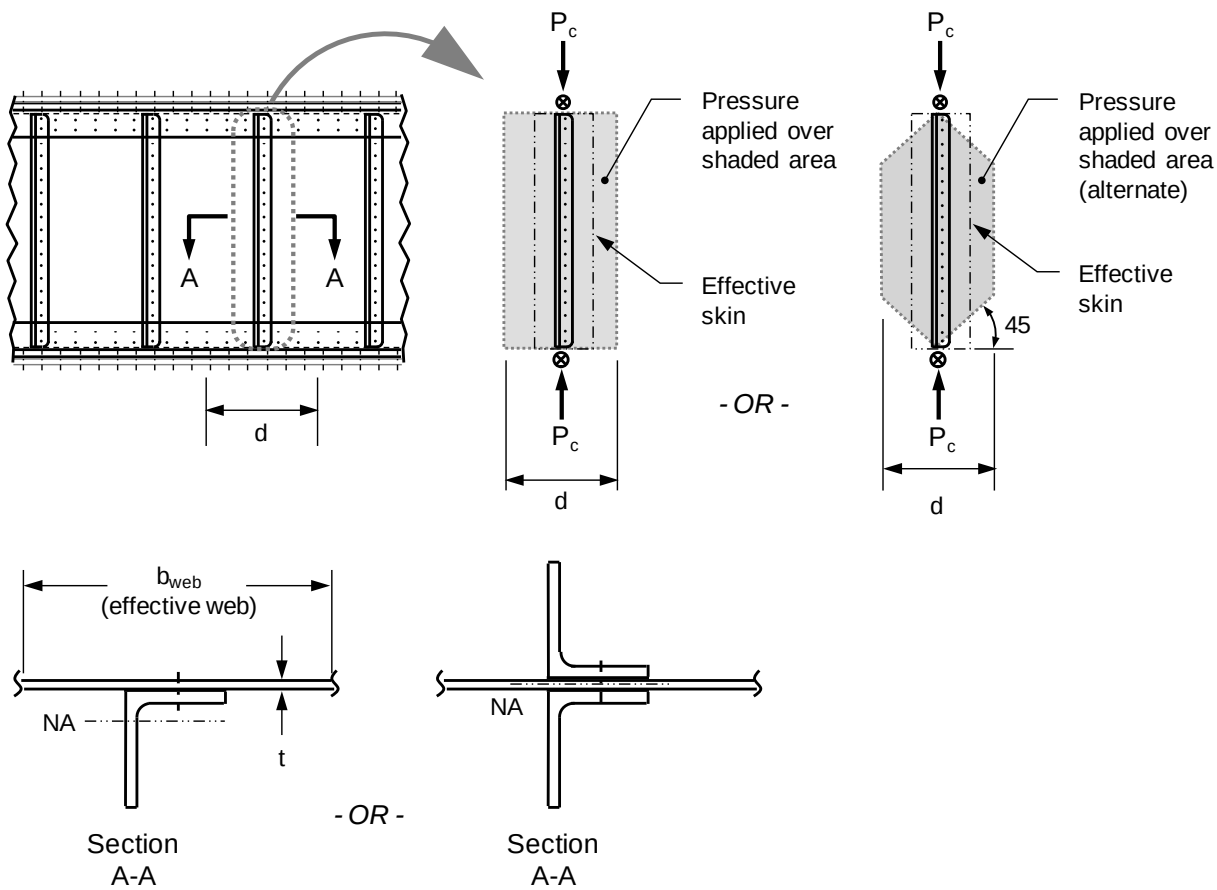

Figure 6.6.1-9: Beam Stiffener Loading and Analysis Cross Sections

6.6.1.8 Stiffener Crippling Analysis

The stiffener crippling analysis is done using the methods given in Section 8.4. For built-up sections, the allowable crippling load is calculated for the attached stiffener alone. The attached skin and web are checked for inter-rivet buckling as applicable. For integrally machined beams, a portion of effective web is included in the crippling calculation. When including effective material from integral structure in the crippling calculation, *the total compressive load for all elements must be used*. The areas used in the crippling calculations for built-up and machined beams are shown in Figure 6.6.1-10.

When pressures act normal to the beam web, the crippling analysis is modified to include bending as shown in Section 8.4.2.5.

Copyright 2016 Lockheed Martin Corporation.
Note: The current version is always the version on the Lockheed Martin network.

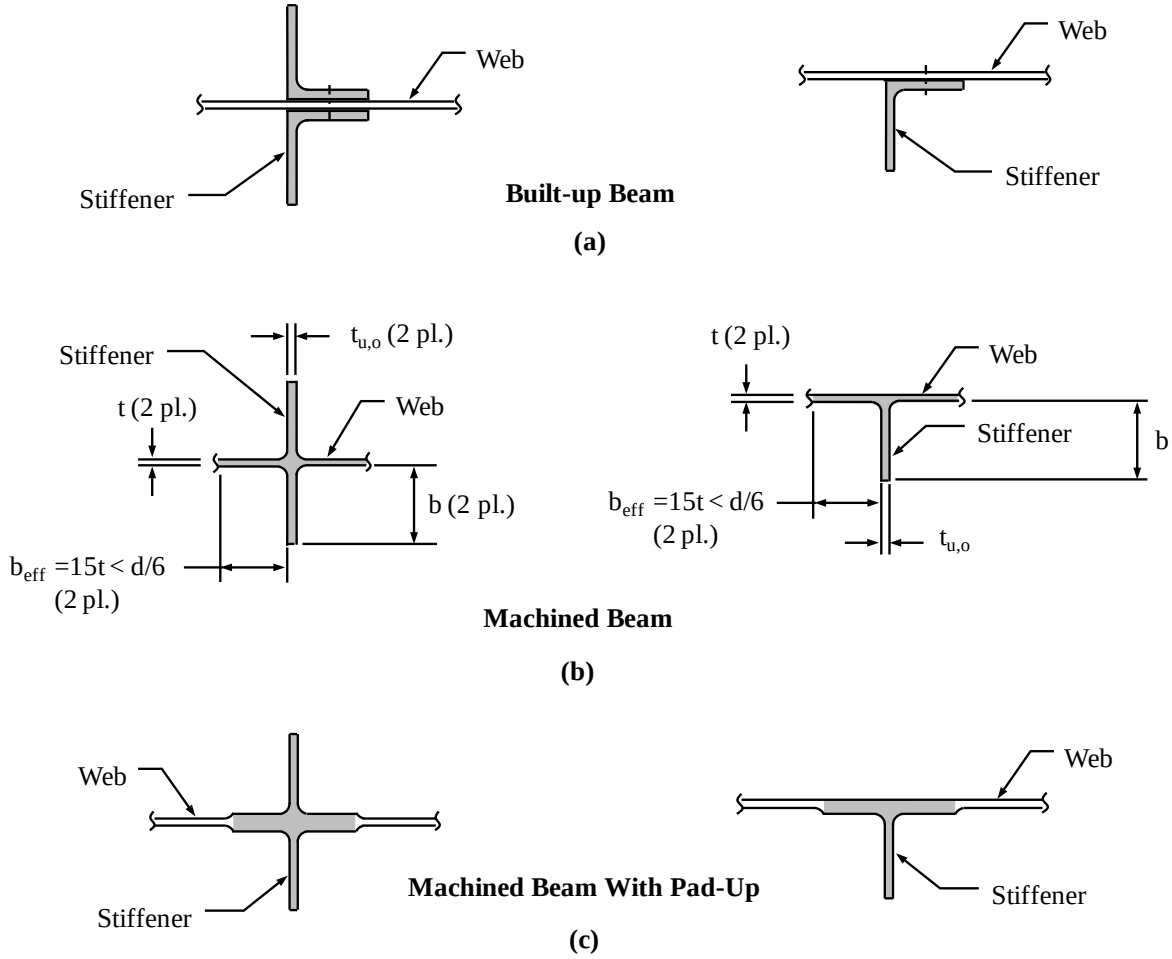

Figure 6.6.1-10: Stiffener Areas used in Crippling Load Calculations

6.6.1.9 Stiffener Stability Analysis

The stiffener stability analysis is done using the methods given in Section 10.3. It is required that the stiffener remain unbuckled to Ultimate load. The buckling load is calculated for the stiffener outstanding leg alone; the attached flange and effective web are not included in the stability analysis. The dimensions used in the flange stability analysis are dependent upon the intersecting structure and are determined in a manner similar to the idealizations shown in Figure 6.6.1-8.

6.6.1.10 Stiffener Required Inertia Check

The primary function of stiffeners is to decrease the size of the web panels, which improves the web buckling resistance and reduces weight. The panel dimensions used in the web stability analysis are valid only if the stiffeners have sufficient rigidity to enforce buckling nodes at the panel edges; if the stiffeners are too flexible, the web will buckle “through” the stiffener, resulting in a larger stability panel than assumed.

To enforce a node, the stiffener must not deflect excessively normal to the plane of the web; to ensure this, a minimum moment of inertia must be maintained, measured about an axis parallel to the web. Figure 6.6.1-11 provides the minimum required moment of inertia for the stiffener (Reference 6-29).

Copyright 2016 Lockheed Martin Corporation.
Note: The current version is always the version on the Lockheed Martin network.

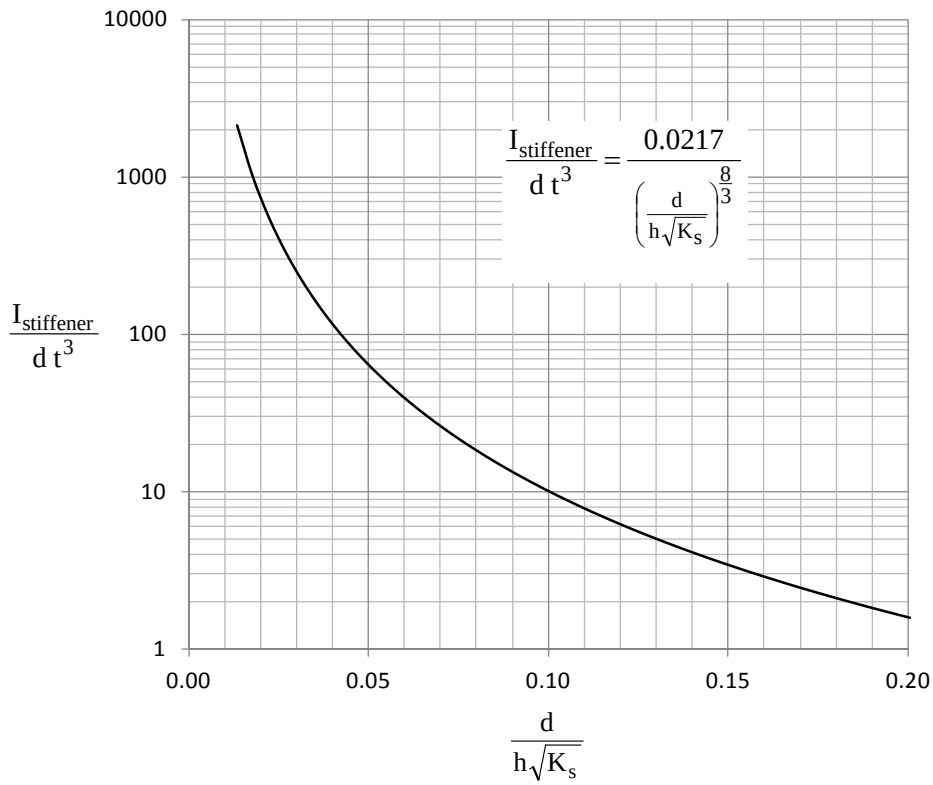

Figure 6.6.1-11: Minimum Moment of Inertia for Stiffeners Supporting Shear Resistant Panels

The minimum moment of inertia curve of Figure 6.6.1-11 is given in Equation form:

$$\frac{I_{stiffener}}{d\,t^3} = \frac{0.0217}{\left(\frac{d}{h\sqrt{K_s}}\right)^{8/3}}$$

Equation 6.6.1-2

Where:

$I_{stiffener}$ is the required moment of inertia for the stiffener (in^4) for the cross sections shown in Figure 6.6.1-12

d is the panel small dimension (in)

h is the panel large dimension (in)

t is the web thickness at the analysis location (in)

K_s is the shear buckling coefficient for the panel, from Equation 10.3.1-5, using Figure 10.3.2-7 (simply supported)

Reference dimensions for the minimum required inertia calculation are shown in Figure 6.6.1-12.

Copyright 2016 Lockheed Martin Corporation.
Note: The current version is always the version on the Lockheed Martin network.

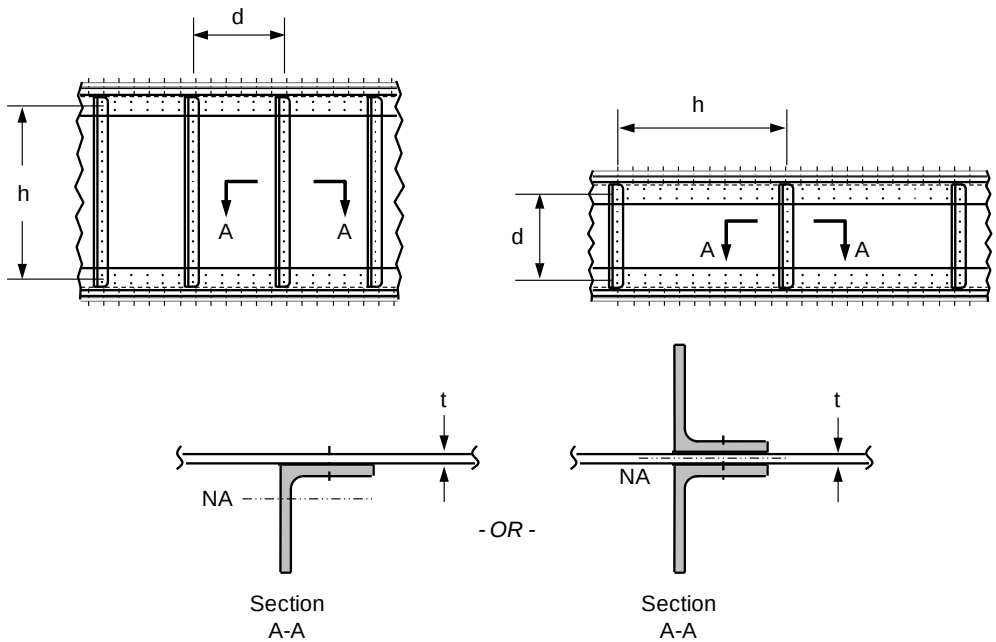

Notes:
1. "d" is always the smaller panel dimension.
2. "NA" is the Neutral Axis of the shaded portions only.

Figure 6.6.1-12(a): Effective Section for Stiffener Minimum Inertia Calculation – Built-Up Beam

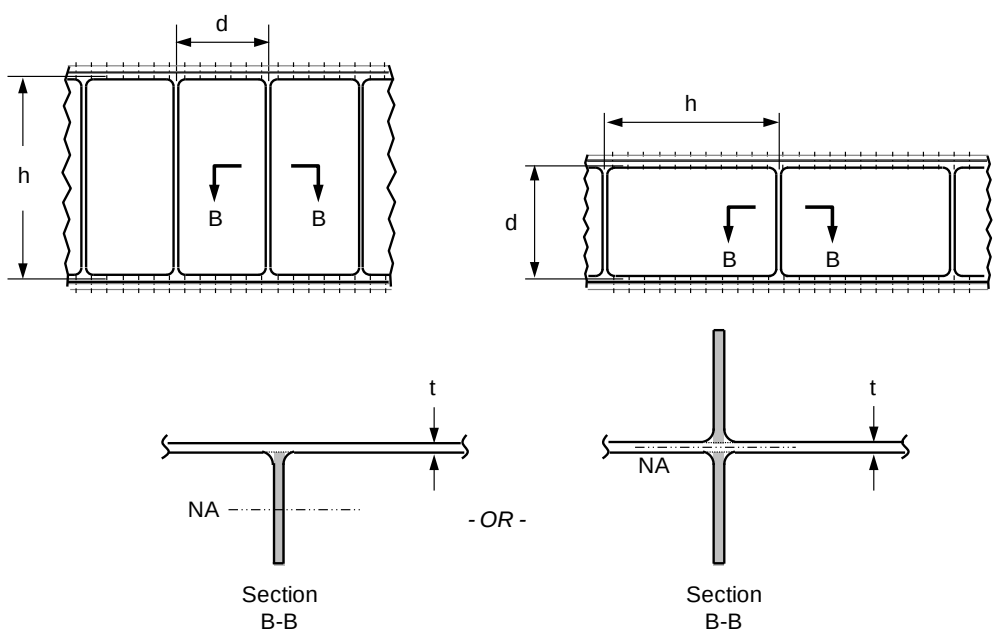

Notes:
1. "d" is always the smaller panel dimension.
2. "NA" is the Neutral Axis of the shaded portions only.

Copyright 2016 Lockheed Martin Corporation.
Note: The current version is always the version on the Lockheed Martin network.

Figure 6.6.1-12(b): Effective Section for Stiffener Minimum Inertia Calculation –Machined Beam

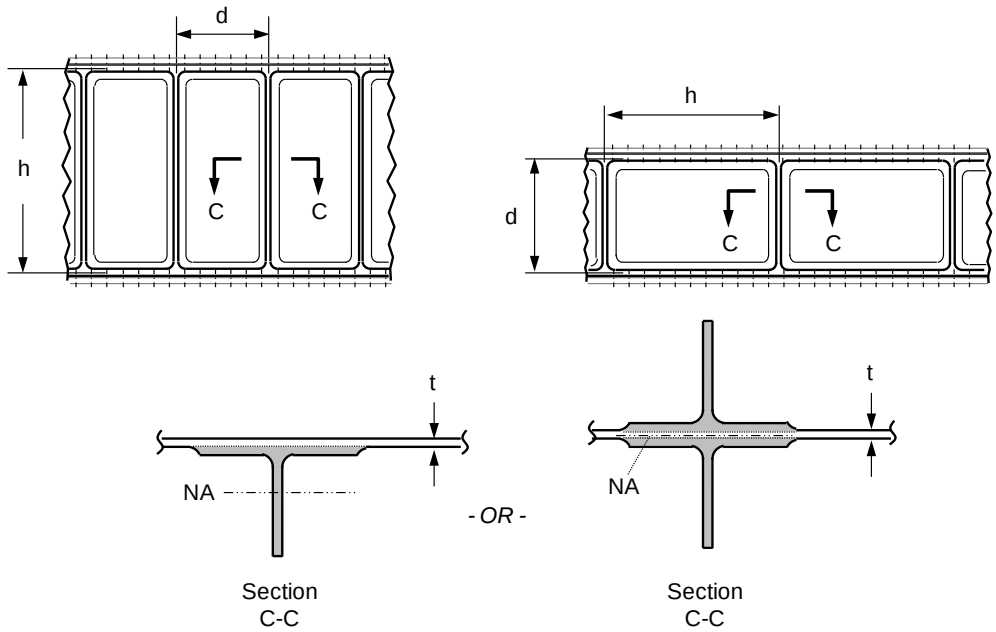

Notes:
1. "d" is always the smaller panel dimension.
2. "NA" is the Neutral Axis of the shaded portions only.

Figure 6.6.1-12(c): Effective Section for Stiffener Minimum Inertia Calculation –Machined Beam with Pad-ups

For reference, the effective panel buckling coefficient is as shown:

$$K_s = \frac{k_s \pi^2}{12(1-\upsilon_e^2)}$$

Reference Equation 10.3.1-5

Where:

k_s is the shear buckling coefficient from Figure 10.3.2-7, with all edges simply supported[1]. If the web is attached with a single fastener row, use Figure 10.3.2-15.

ν_e is the elastic Poisson's Ratio

Notes for use of Equation 6.6.1-2:

1. At elevated temperatures, multiply $I_{stiffener}/dt^3$ by $E_{Room\ Temp}/E_{Elevated\ Temp}$.
2. For built-up beams, the analysis is only applicable when the ends of the stiffeners are attached to the flanges.
3. Do not include any effective skin in the stiffener moment of inertia calculation.
4. The panel buckling stress must be in the elastic range.
5. The stiffener thickness must not be less than the web thickness except as shown in Table 6.6.1-2. It is permissible to interpolate between values for machined webs.

Minimum required stiffener thicknesses for common web sheet gages are shown in Table 6.6.1-2. The stiffener thickness obtained through use of Equation 6.6.1-2 must not be less than the minimum from Table 6.6.1-2.

[1] When using Eq. 10.3.1-5 and Fig. 10.3.2-7, the "b" and "a" terms are represented by "d" and "h", respectively.

Copyright 2016 Lockheed Martin Corporation.
Note: The current version is always the version on the Lockheed Martin network.

Table 6.6.1-2: Minimum Stiffener Thickness for Shear Resistant Panels

Web Thickness, in	0.025	0.032	0.04	0.051	0.064	0.072	0.081	0.091	0.102	0.125	0.156
Stiffener Min. Thickness, in	0.025	0.032	0.04	0.051	0.051	0.064	0.064	0.072	0.081	0.081	0.091

6.6.1.11 Joint Strength Analysis – Web-to-Flange Attachments

In built-up beams, the web-to-flange joint is checked using the methods given in Section 5.2. Figure 6.6.1-13 depicts the load transfer between the web and attached flange. Only the components which load the web-to-flange joint are shown. Note that if the boundary conditions at the panel edge are assumed to provide some level of moment restraint, the fastener loads are unaffected but the stress distribution adjacent to the attachments is affected.

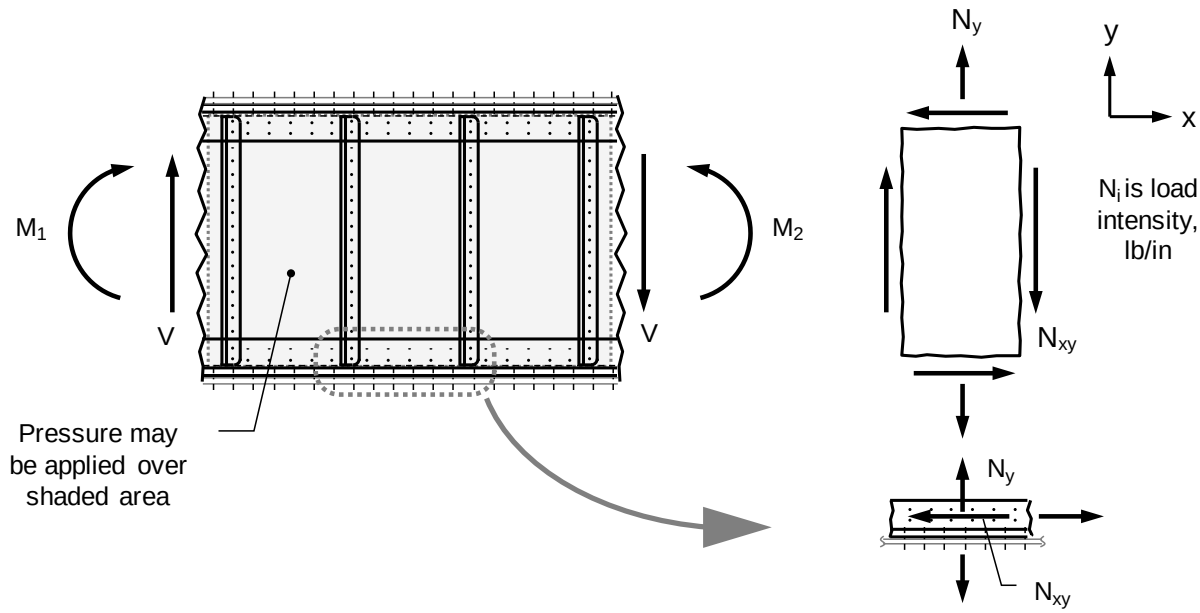

Figure 6.6.1-13: Load Transfer between Web and Flange for a Built-Up Beam

6.6.1.12 Joint Strength Analysis – Flange-to-Skin Attachments

Generalized free body diagrams for flanges attached to continuous and discontinuous skins are shown in Figure 6.6.1-4. The beam is checked at flange-to-skin joints using these loads and the methods given in Section 5.2.

6.6.1.13 Joint Strength Analysis – Stiffener Termination

In built-up beams, the stiffener-to-flange joint is checked using the methods given in Section 5.2. Figure 6.6.1-14 depicts the load transfer between the stiffener and attached flange for varying conditions of pressure and end restraint. For hand analyses, it is often assumed that single attachment rows provide simply supported end restraints and double attachment rows provide fixed end restraints. Note that the stiffener axial load, P_{stiff}, may be either tensile or compressive.

Copyright 2016 Lockheed Martin Corporation.
Note: The current version is always the version on the Lockheed Martin network.

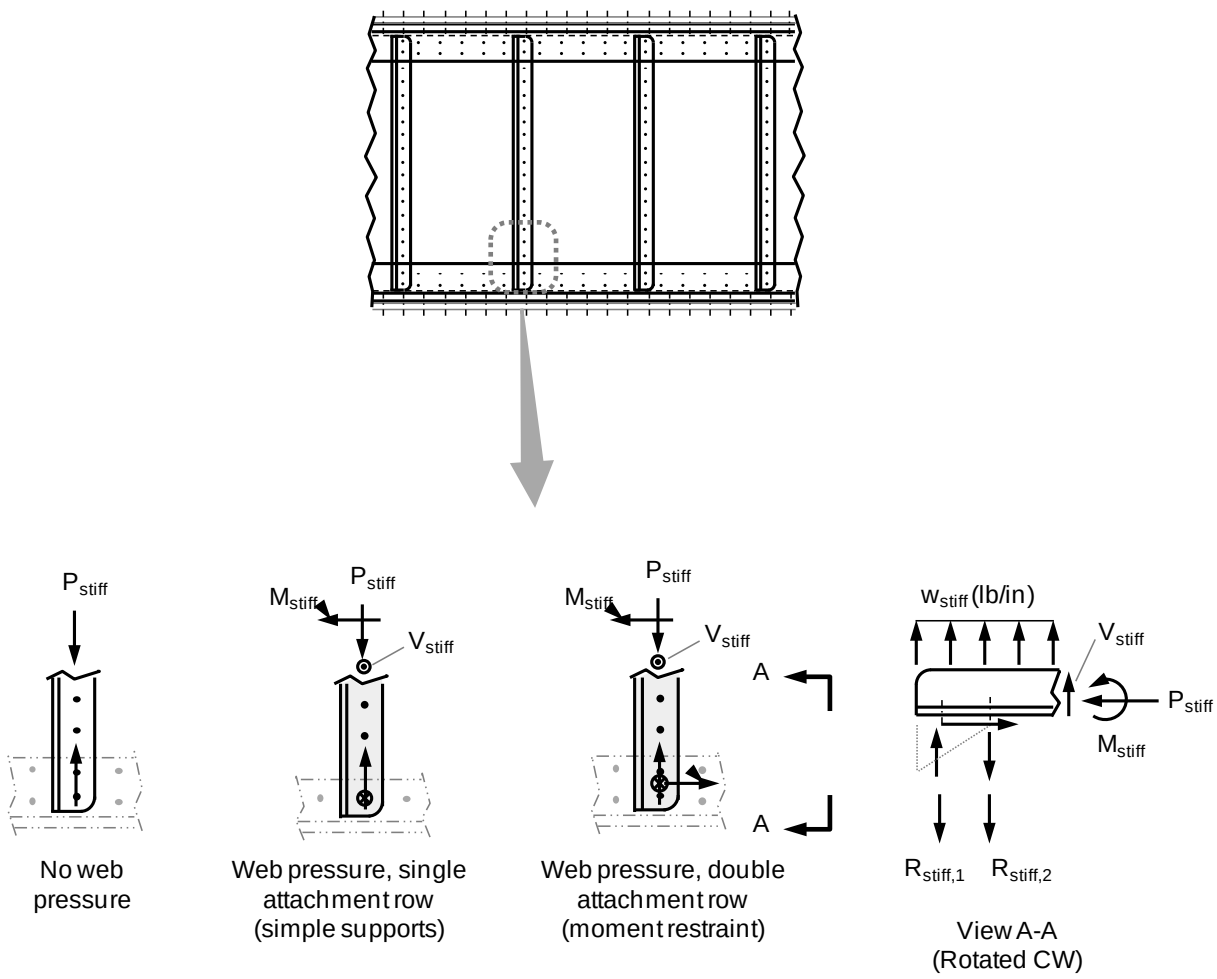

Figure 6.6.1-14: Load Transfer between Stiffener and Flange for a Built-Up Beam

6.6.1.14 Joint Strength Analysis – Load Introduction

The beam is checked at the load introduction joints using the methods given in Section 5.2. The load transfer between attached structure is highly dependent upon the configuration details. Figure 6.6.1-15 shows simple shear and moment splices for a built-up beam. The flange splice loads, P_{flg}, are dependent upon the configuration of the flange/skin attachment.

Copyright 2016 Lockheed Martin Corporation.
Note: The current version is always the version on the Lockheed Martin network.

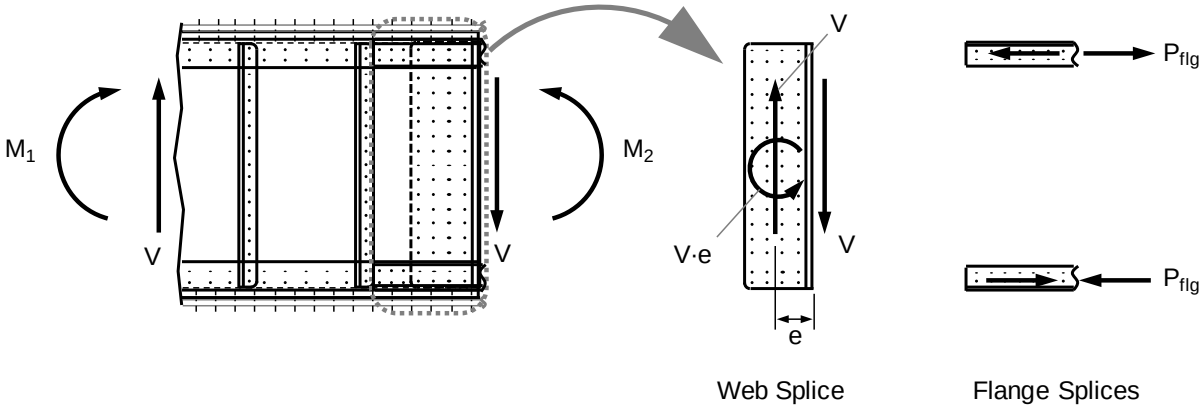

Figure 6.6.1-15: Load Introduction Splices for a Built-Up Beam

At splice locations, it is recommended that stiffness-based methods be used to determine the internal load distribution. Part thicknesses, materials, fastener type/size, shims, etc. have a significant effect on the load transfer between attaching parts. If assumptions are made in lieu of a stiffness-based analysis, care must be taken to ensure that the distribution is reasonable and not unconservative. In joint strength checks, it is common to assume an "ultimate distribution" in which bearing deformation results in load being shared equally between same-size fasteners. *This assumption is only valid in bearing critical joints.*

6.6.1.15 Joint Strength Analysis – Miscellaneous Manufacturing Splices

In built-up beams, splices are often required for manufacturing reasons. For strength analyses, these are treated similarly to load introduction splices (Section 6.6.1.14) using the methods given in Section 5.2.

Judgment should be used in locating manufacturing splices and in their configuration. Knowledge of the beam inflection points for the dominant loading will result in a configuration which is minimum weight and least sensitive to future internal loads changes. Splices should be located at points of minimum beam bending moment so that they are sized primarily to transfer shear between mating parts.
Joints should be configured such that fasteners transfer load in shear whenever possible. Tension fittings are less desirable from a weight and structural integrity[1] standpoint and should not be used purely as a matter of manufacturing convenience.

6.6.1.16 Shear Resistant Beam Strength Analysis – Reference Dimensions

For reference, the various height dimensions which are required in the strength and stability analyses of a shear resistant beam are shown in Figure 6.6.1-16.

[1] This includes static strength, stiffness and fatigue life.

Copyright 2016 Lockheed Martin Corporation.
Note: The current version is always the version on the Lockheed Martin network.

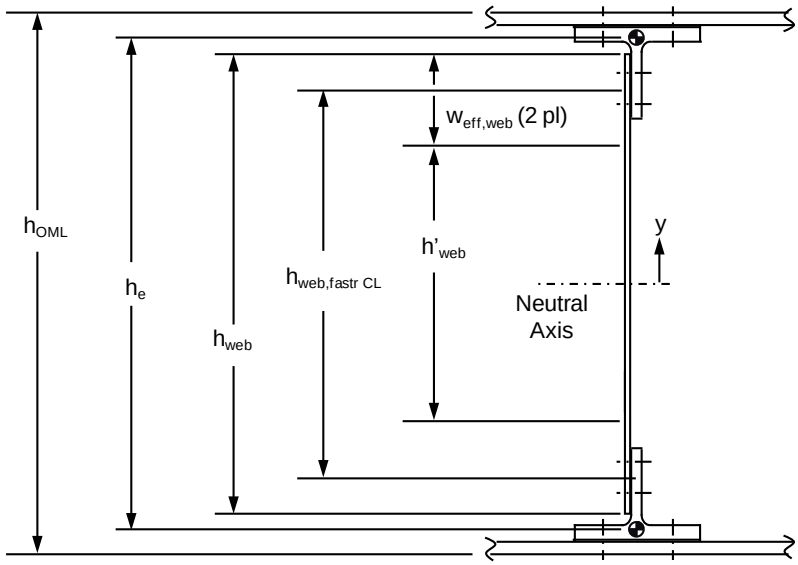

Figure 6.6.1-16: Height Definitions for Analysis of a Shear Resistant Built-Up Beam

Copyright 2016 Lockheed Martin Corporation.
Note: The current version is always the version on the Lockheed Martin network.

6.6.1.17 Example Calculation – Shear Resistant Beam Strength Analysis, No Normal Pressure (Exact Solution)

Given:
The Ultimate loads acting on the built-up beam shown are: V= 20,000 lb, M=20,000 lb (40 in) = 800,000 in-lb. The beam web must remain unbuckled to Ultimate load. The exact solutions are used to calculate the beam shear and bending stresses.

Assume:
1. The beam web is effective in resisting bending.
2. The skins act to restrain the beam against lateral displacement.
3. There are no shims between mating parts.
4. The longitudinal grain direction is beam spanwise for all components except the stiffeners.
5. The beam operating temperature is 160° F.
6. Ultimate load = 1.5 (Limit Load)
7. The crippling strength of the tee flange alone at 160°F is 62.881 ksi, using IDAT SM110 v1.4. Note that this value includes a 5% temperature reduction per Reference 6-5, Figure 3.7.6.1.2(a)

Determine the strength and stability margins of safety for Bay E.

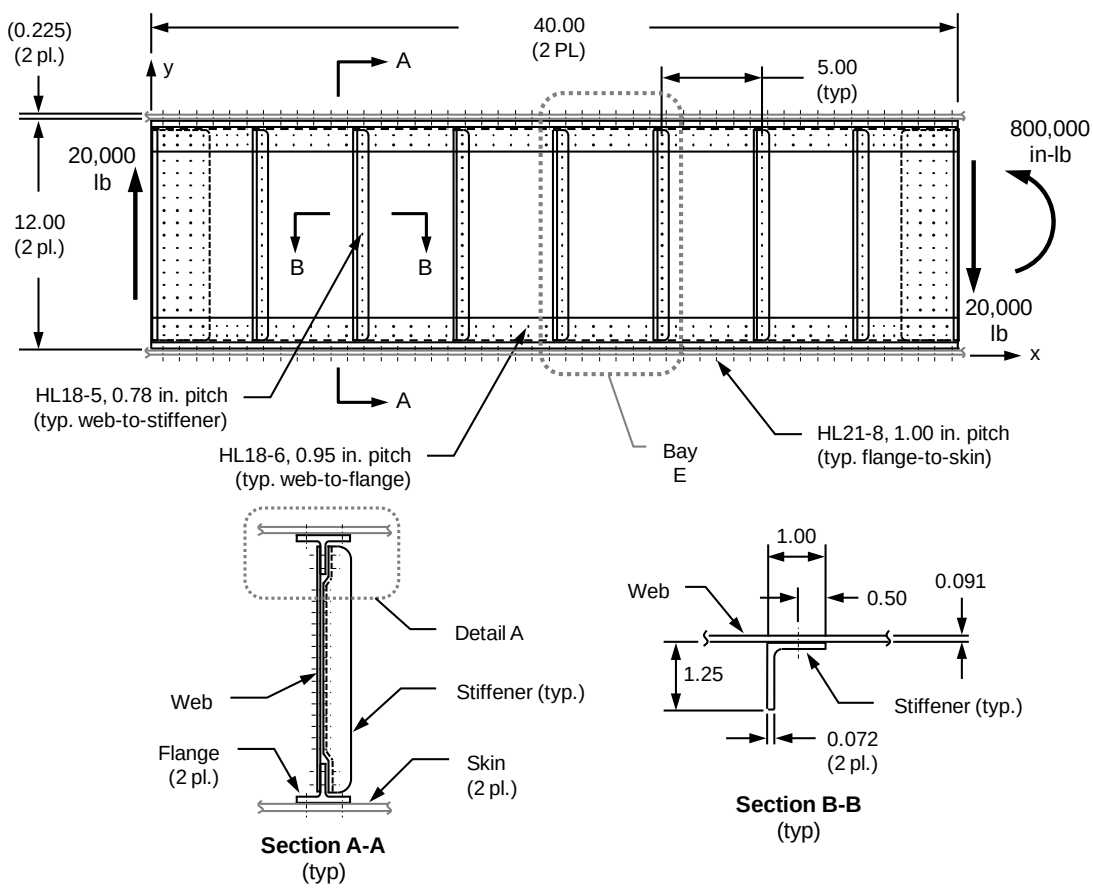

Figure 1a: Beam Configuration

Copyright 2016 Lockheed Martin Corporation.
Note: The current version is always the version on the Lockheed Martin network.

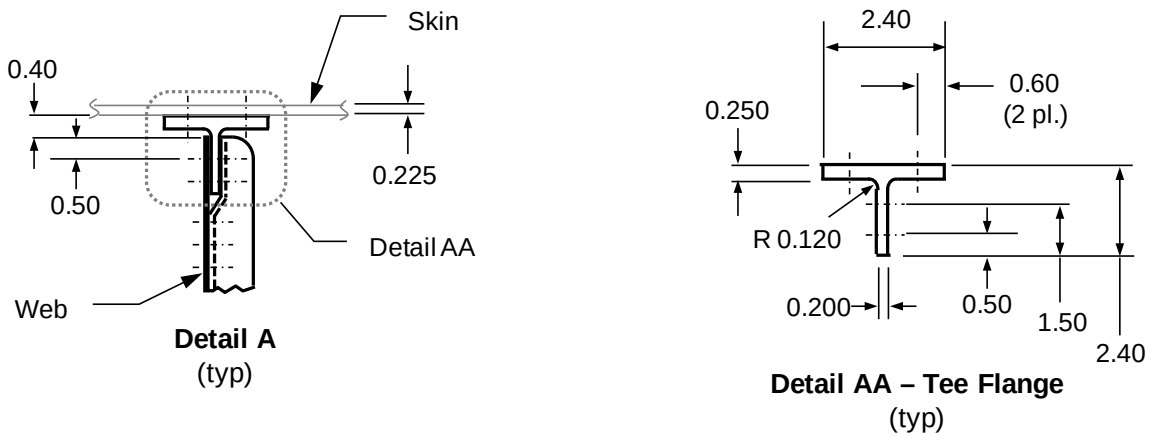

Figure 1b: Beam Configuration

Table 1a: Beam Material Properties at Room Temperature [1]

Item	Material	E_t, msi	E_c, msi	F_{tu}, ksi	F_{ty}, ksi	F_{cu}, ksi [2]	F_{cy}, ksi	F_{su}, ksi	F_{sy}, ksi [2]	F_{bru}, ksi	F_{bry}, ksi [2]	n
Skins	7075-T7351 Bare Plate, 0.25-0.499 Thick, S-Basis	10.30	10.60	68.00	57.00	66.80	56.00	38.00	30.30	131.00	95.00	20
Tee Flanges	7075-T6511 Extrusion, 0.25-0.499 Thick, B-Basis	10.40	10.70	85.00	77.00	85.00	77.00	45.00	39.10	153.00	119.00	26
Web	7075-T6 Bare Sheet, 0.04-0.125 Thick, B-Basis	10.30	10.50	80.00	72.00	78.90	71.00	48.00	39.50	160.00	122.00	13
Stiffeners	7075-T76511 Extrusion, 0.062-0.25 Thick, B-Basis	10.40	10.70	74.00	65.00	74.00	65.00	40.00	33.50	137.00	104.00	25

Table 1b: Temperature Reduction Factors to 160° F

Temperature Reduction Factor (TRF) [1]	0.980	0.980	0.940	0.950	0.940	0.950	0.990	0.990	0.915	0.975	-
	1.4	1.4	1.1(c)	1.1(d)	1.1(c)	1.2(a)	1.2(b)	1.2(b)	1.3(a)	1.3(b)	-

Table 1c: Beam Material Properties at 160° F [3]

Item	Material	E_t, msi	E_c, msi	F_{tu}, ksi	F_{ty}, ksi	F_{cu}, ksi [2]	F_{cy}, ksi	F_{su}, ksi	F_{sy}, ksi [2]	F_{bru}, ksi	F_{bry}, ksi [2]	n
Skins	7075-T7351 Bare Plate, 0.25-0.499 Thk, S-Basis	10.09	10.39	63.92	54.15	62.79	53.20	37.62	30.00	119.87	92.63	20
Tee Flanges	7075-T6511 Extrusion, 0.25-0.499 Thk, B-Basis	10.19	10.49	79.90	73.15	79.90	73.15	44.55	38.71	140.00	116.03	26
Web	7075-T6 Bare Sheet, 0.04-0.125 Thk, B-Basis	10.09	10.29	75.20	68.40	74.17	67.45	47.52	39.11	146.40	118.95	13
Stiffeners	7075-T76511 Extrusion, 0.062-0.25 Thk, B-Basis	10.19	10.49	69.56	61.75	69.56	61.75	39.60	33.17	125.36	101.40	25

Table 2a: Beam Fasteners - Allowable Shear Loads at Room Temperature [1]

Location	Description	P_{shr}, lb
Flange-to-Skin Attachments	HL21-8, 100° Flush Head Hi-Lok , 95 ksi Steel, 1/4 Dia.	4660
Web-to-Flange Attachments	HL18-6, Protruding Shear Head Hi-Lok, 95 ksi Steel, 3/16	2694
Web-to-Stiffener Attachments	HL18-5, Protruding Shear Head Hi-Lok, 95 ksi Steel, 5/32	2007

Table 2b: Temperature Reduction Factor to 160° F

Temperature Reduction Factor (TRF) for AISI low-alloy steel [1]	0.99

Table 2c: Beam Fasteners - Allowable Shear Loads at 160° [4]

Location	Description	P_{shr}, lb
Flange-to-Skin Attachments	HL21-8, 100° Flush Head Hi-Lok , 95 ksi Steel, 1/4 Dia.	4613
Web-to-Flange Attachments	HL18-6, Protruding Shear Head Hi-Lok, 95 ksi Steel, 3/16	2667
Web-to-Stiffener Attachments	HL18-5, Protruding Shear Head Hi-Lok, 95 ksi Steel, 5/32	1987

[1] Reference 6-5
[2] Calculated using IDAT METDB v3.3b
[3] Table 1c value = Room Temperature property from Table 1a multiplied by corresponding TRF from Table 1b
[4] P_{shr} from Table 2c = P_{shr} at Room Temperature from Table 2a multiplied by TRF from Table 2b

Copyright 2016 Lockheed Martin Corporation.
Note: The current version is always the version on the Lockheed Martin network.

Solution Step:

a) Determine the effective widths of skin and web to be included in the section property calculations.

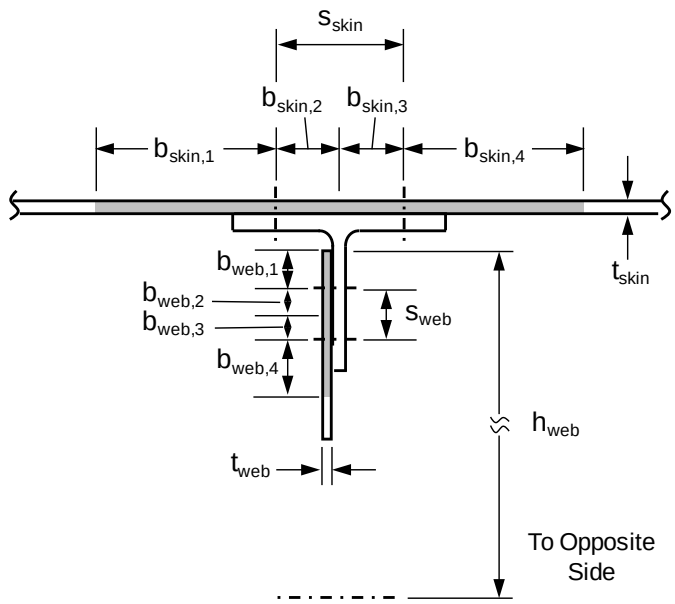

Limiting Geometry:

$b_{skin,2}, b_{skin,3} \leq s_{skin}/2$

$b_{web,2}, b_{web,3} \leq s_{web}/2$

$b_{web,1} + b_{web,2} + b_{web,3} + b_{web,4} \leq h_{web}/6$

From Table 4.3.1-1, the equations for no edges free and one edge free effective widths are shown. Note that the b_{eff} term is represented by the b_{skin} and b_{web} terms in the above illustration.

$$b_{eff} = 1.91\left(\frac{f_{sk}}{F_{st}}\right)t\sqrt{\frac{E_{tan}}{F_{st}}} \quad \text{(Equation 4.3.1-5, No Edges Free, Simply Supported)}$$

$$b_{eff} = 2.52\left(\frac{f_{sk}}{F_{st}}\right)t\sqrt{\frac{E_{tan}}{F_{st}}} \quad \text{(Equation 4.3.1-6, No Edges Free, Fixed)}$$

$$b_{eff} = 0.63\left(\frac{f_{sk}}{F_{st}}\right)t\sqrt{\frac{E_{tan}}{F_{st}}} \quad \text{(Equation 4.3.1-8, One Edge Free, One Edge Simply Supported)}$$

For this cross section, F_{st} is the minimum of the:

1) Tee crippling stress
2) Tee stress corresponding to the inter-rivet buckling stress of the attached skin (or web)
3) Tee stress corresponding to the compression yield stress of the attached skin (or web)

Because the tee, skin and web are different materials, it is necessary to determine the strain levels at these stresses.

<u>Tee crippling stress</u>: F_{cc} = 62.881 ksi at 160° F (from the problem statement)

<u>Skin inter-rivet buckling stress</u>:

The fastener pitch, s = 1.00 in, from Figure 1a. Using Equation 8.6.1-6, the effective slenderness ratio is:

$$\frac{L'}{\rho} = 1.732\frac{s}{t_{skin}} = 1.732\frac{1.00\ in}{0.225\ in} = 7.70$$

Copyright 2016 Lockheed Martin Corporation.
Note: The current version is always the version on the Lockheed Martin network.

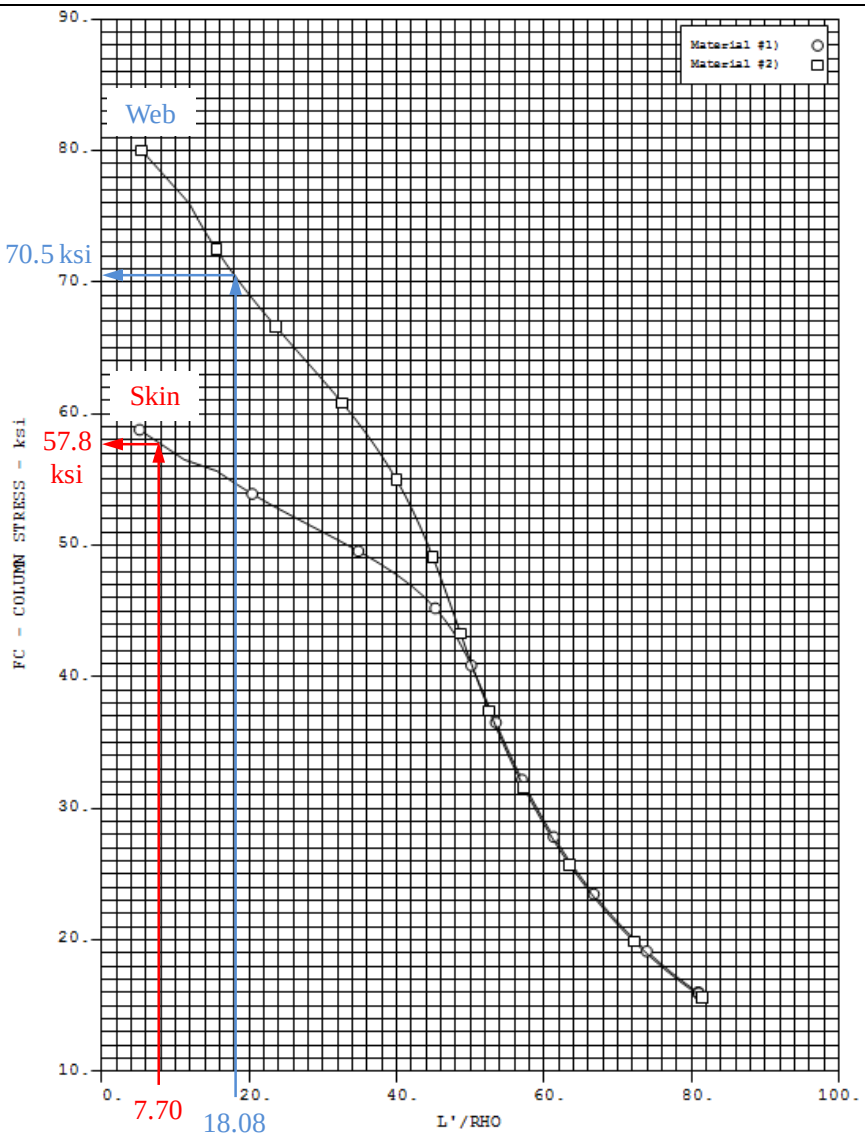

Using the IDAT SM83 column curve (above) for 7075-T7351 Plate, the skin inter-rivet buckling stress is: F_{IR} = 57.8 ksi. The inter-rivet buckling stress at room temperature is above the proportional limit stress, so the temperature correction is based on the compression yield stress. From Table 1b, TRF=0.95.

$$F_{IR(160°F)} = F_{IR(RT)}(TRF) = 57.8\ ksi(0.95) = 54.91\ ksi$$

<u>Web inter-rivet buckling stress</u>:

The fastener pitch, s = 0.95 in, from Figure 1a. Using Equation 8.6.1-6, the effective slenderness ratio is:

$$\frac{L'}{\rho} = 1.732\frac{s}{t_{web}} = 1.732\frac{0.95\ in}{0.091\ in} = 18.08$$

The inter-rivet buckling stress at room temperature is above the proportional limit stress, so the temperature correction is based on the compression yield stress. From Table 1b, TRF=0.95.

$$F_{IR(160°F)} = F_{IR(RT)}(TRF) = 70.5\ ksi(0.95) = 66.98\ ksi$$

Copyright 2016 Lockheed Martin Corporation.
Note: The current version is always the version on the Lockheed Martin network.

The skin and web inter-rivet buckling stresses are compared with the compression yield stresses, as shown below.

	F_{IR}, ksi (above)	F_{cy}, ksi (Table 1c)
Skin	54.91	**53.20**
Web	**66.98**	67.45

The skin stress is limited to F_{cy} and the web stress is limited to $F_{IR;}$ the tee stress is limited to F_{cc} = 62.881 ksi. The tee, skin and web strains at the limiting stresses are calculated using Equation 3.3.1-6 (Hill stress-strain equation):

$$\varepsilon = \frac{f}{E_c} + 0.002\left(\frac{f}{F_{cy}}\right)^n$$

The tee, skin and web properties from Table 1c are shown below.

	E_c, msi	F_{cy}, ksi (Table 1c)	n
Tee	10.49	73.15	26
Skin	10.39	53.20	20
Web	10.29	67.45	13

$$\varepsilon_{tee} = \frac{62{,}881\ psi}{10.49E6\ psi} + 0.002\left(\frac{62{,}881\ psi}{73{,}150\ psi}\right)^{26} = 0.006034\ \ in/in = 6034\ \ \mu\ in/in$$

$$\varepsilon_{skin} = \frac{53{,}200\ psi}{10.39E6\ psi} + 0.002\left(\frac{53{,}200\ psi}{53{,}200\ psi}\right)^{20} = 0.007120\ \ in/in = 7120\ \ \mu\ in/in$$

$$\varepsilon_{web} = \frac{66{,}980\ psi}{10.29E6\ psi} + 0.002\left(\frac{66{,}980\ psi}{67{,}450\ psi}\right)^{13} = 0.008335\ \ in/in = 8335\ \ \mu\ in/in$$

The section strain is limited to the tee crippling strain of 6034 μ in/in, thus: $F_{st} = F_{cc}$ = 62.881 ksi at 160° F.

<u>Effective width of attached skin</u>:

Calculate the tangent modulus of the tee at F_{st} using Equation 3.3.1-8 (Hill formulation). All material properties are for the tee at 160°F, from Table 1c.

$$E_{tan} = \frac{1}{\frac{1}{E_c} + 0.002\left(\frac{n}{F_{cy}}\right)\left(\frac{F_{st}}{F_{cy}}\right)^{n-1}}$$

E_c = 10.49 msi
n = 26
F_{cy} = 73.15 ksi
F_{st} = 62.881 ksi

$$E_{tan} = \frac{1}{\frac{1}{10.49E6\ psi} + 0.002\left(\frac{26}{73{,}150\ psi}\right)\left(\frac{62{,}881\ psi}{73{,}150\ psi}\right)^{(26-1)}} = 8.967E6\ psi$$

Using Equation 3.3.1-6, determine the skin stress, f_{sk}, at the crippling strain of 6034 μ in/in. Skin properties are used for this calculation.

$$\varepsilon = \frac{f}{E_c} + 0.002\left(\frac{f}{F_{cy}}\right)^n = 0.006034\ \ in/in = \frac{f}{10.39E6\ psi} + 0.002\left(\frac{f}{53{,}200\ psi}\right)^{20}$$

Through iteration, the skin stress at the tee crippling strain of 6034 μ in/in is: $f = f_{sk}$ = 51,565 psi.
s_{skin} = 1.20 in, t_{skin} = 0.225 in

For skin Segments 1 and 4, Equation 4.3.1-5 is used. Note that each of the two segment widths is equal to b_{eff} / 2.

$$b_{skin,1,4} = \frac{b_{eff}}{2} = \frac{1.91}{2}\left(\frac{f_{sk}}{F_{st}}\right)\mathrm{t}\sqrt{\frac{E_{tan}}{F_{st}}} = \frac{1.91}{2}\left(\frac{51{,}565\ psi}{62{,}881\ psi}\right)0.225\ \mathrm{in}\sqrt{\frac{8.967E6\ psi}{62{,}881\ psi}} = 2.10\ in$$

Copyright 2016 Lockheed Martin Corporation.
Note: The current version is always the version on the Lockheed Martin network.

For skin Segments 2 and 3, Equation 4.3.1-6 is used. Note that each of the two segment widths is equal to b_{eff} / 2.

$$b_{skin,2,3} = \frac{b_{eff}}{2} = \frac{2.52}{2}\left(\frac{f_{sk}}{F_{st}}\right)\mathrm{t}\sqrt{\frac{E_{tan}}{F_{st}}} = \frac{2.52}{2}\left(\frac{51{,}565\ psi}{62{,}881\ psi}\right)0.225\ \text{in}\sqrt{\frac{8.967E6\ psi}{62{,}881\ psi}} = 2.78\ in$$

$b_{skin,2} + b_{skin,3} = 5.56\ in$, which exceeds s_{skin}, so the pitch dimension of 1.20 in governs.

The total effective width of skin used in the beam section property calculations is then:

$$w_{eff,skin} = \Sigma b_{skin,1-4} = 2.10\ in\ (2) + 1.20\ in = 5.400\ in$$

<u>Effective width of attached web</u>:

Using Equation 3.3.1-6, determine the web stress, f_{web}, at the crippling strain of 6034 μ in/in. Web properties are used for this calculation.

$$\varepsilon = \frac{f}{E_c} + 0.002\left(\frac{f}{F_{cy}}\right)^n = 0.006034\ in/in = \frac{f}{10.29E6\ psi} + 0.002\left(\frac{f}{67{,}450\ psi}\right)^{13}$$

Through iteration, the web stress at the tee crippling strain of 6034 μ in/in is: f = f_{web} = 58,700 psi.

s_{web} = 1.00 in, t_{web} = 0.091 in

For web Segment 1, Equation 4.3.1-8 is used. Reference Figure 1b, Detail A, the edge distance for the web upper fastener is 0.50 in. The calculated value for $b_{web,1}$ cannot exceed this value.

$$b_{web,1} = 0.63\left(\frac{f_{web}}{F_{st}}\right)\mathrm{t}\sqrt{\frac{E_{tan}}{F_{st}}} = 0.63\left(\frac{58{,}700\ psi}{62{,}881\ psi}\right)0.091\ \text{in}\sqrt{\frac{8.967E6\ psi}{62{,}881\ psi}} = 0.64\ in$$

This exceeds the 0.50 in edge distance, so: $b_{web,1}$ = 0.50 in

For web Segments 2 and 3, Equation 4.3.1-6 is used. Note that each of the two segment widths is equal to b_{eff} / 2.

$$b_{web,2,3} = \frac{b_{eff}}{2} = \frac{2.52}{2}\left(\frac{f_{web}}{F_{st}}\right)\mathrm{t}\sqrt{\frac{E_{tan}}{F_{st}}} = \frac{2.52}{2}\left(\frac{58{,}700\ psi}{62{,}881\ psi}\right)0.091\ \text{in}\sqrt{\frac{8.967E6\ psi}{62{,}881\ psi}} = 1.28\ in$$

$b_{web,2} + b_{web,3}$ = 1.28 in (2) = 2.56 in, which exceeds s_{web}, so the pitch dimension of 1.0 in governs.

For web Segment 4, Equation 4.3.1-5 is used. Note that the segment width is equal to b_{eff} / 2.

$$b_{web,4} = \frac{b_{eff}}{2} = \frac{1.91}{2}\left(\frac{f_{web}}{F_{st}}\right)\mathrm{t}\sqrt{\frac{E_{tan}}{F_{st}}} = \frac{1.91}{2}\left(\frac{58{,}700\ psi}{62{,}881\ psi}\right)0.091\ \text{in}\sqrt{\frac{8.967E6\ psi}{62{,}881\ psi}} = 0.97\ in$$

The total effective width of web is then:

$$w_{eff,web} = \Sigma b_{web,1-4} = 0.50\ in + 1.0\ in + 0.97\ in = 2.47\ in$$

This value is compared with the $h_{web}/6$ limit for webs in bending:

$h_{web} = 12\ in - 2(0.25\ in + 0.12\ in + 0.030\ in) = 11.200\ in$ (note that the web edge of part set-back is 0.030 in from the fillet radius point of tangency)

$\frac{h_{web}}{6} = \frac{11.20\ in}{6} = 1.867\ in$, which is the limiting web effective width dimension.

The total effective width of web used in the beam section property calculations is then:

$$w_{eff,web} = 1.867\ in$$

Copyright 2016 Lockheed Martin Corporation.
Note: The current version is always the version on the Lockheed Martin network.

b) Determine the section properties of the cap using the effective width calculations from Step (a):

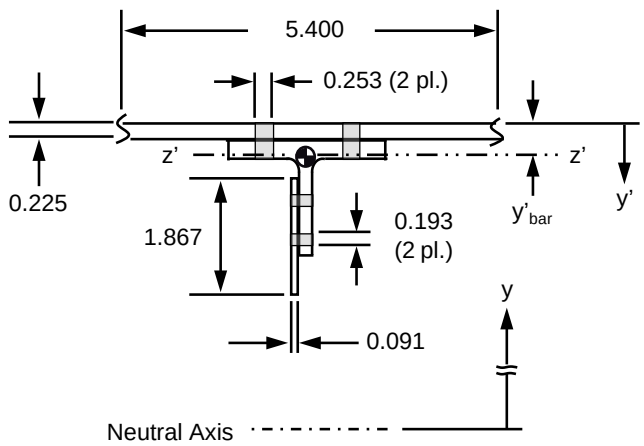

Reference: IDAT SECTION V6.3a:
y'_{bar} = 0.504 in A_{cap} = 2.062 in^2 I_{cap} = 0.8919 in^4

c) Determine the section properties of the beam using the cap properties from Step (b):

The beam OML height is:

$$h_{OML} = 12.0\ in + 2(0.225\ in) = 12.45\ in$$

The distance between cap centroids is:

$$h_e = h_{OML} - 2(y_{bar}) = 12.45\ in - 2(0.504\ in) = 11.442\ in$$

The height of the remaining portion of the web is needed to calculate the total section properties of the beam:

$$h'_{web} = h_{web} - 2\ w_{eff,web} = 11.200\ in - 2(1.867\ in) = 7.466\ in$$

The total beam first area moment is the sum of the contributions from the cap and the remaining portion of the web. The first area moment is computed using the area above the beam neutral axis. The calculation is based on Equation 4.2.1-4.

$$Q_{NA} = A_{cap}\left(\frac{h_e}{2}\right) + \frac{t_w(h'_w)^2}{8} = 2.062\ in^2\left(\frac{11.442\ in}{2}\right) + \frac{0.091\ in(7.466\ in)^2}{8} = 11.797\ in^3 + 0.634\ in^3 = 12.431\ in^3$$

The total beam moment of inertia is the sum of the contributions from the caps and the remaining portion of the web. The moment of inertia calculation is based on Equation 4.2.1-8.

$$I = 2\left[I_{cap} + A_{cap}\left(\frac{h_e}{2}\right)^2\right] + \frac{t_w(h'_w)^3}{12} = 2\left[0.8919\ in^4 + 2.062\ in^2\left(\frac{11.442\ in}{2}\right)^2\right] + \frac{0.091\ in(7.466\ in)^3}{12}$$

$$I = 136.762\ in^4 + 3.156\ in^4 = 139.918\ in^4$$

Copyright 2016 Lockheed Martin Corporation.
Note: The current version is always the version on the Lockheed Martin network.

The beam section properties and dimensions used in the following solution steps are summarized below:

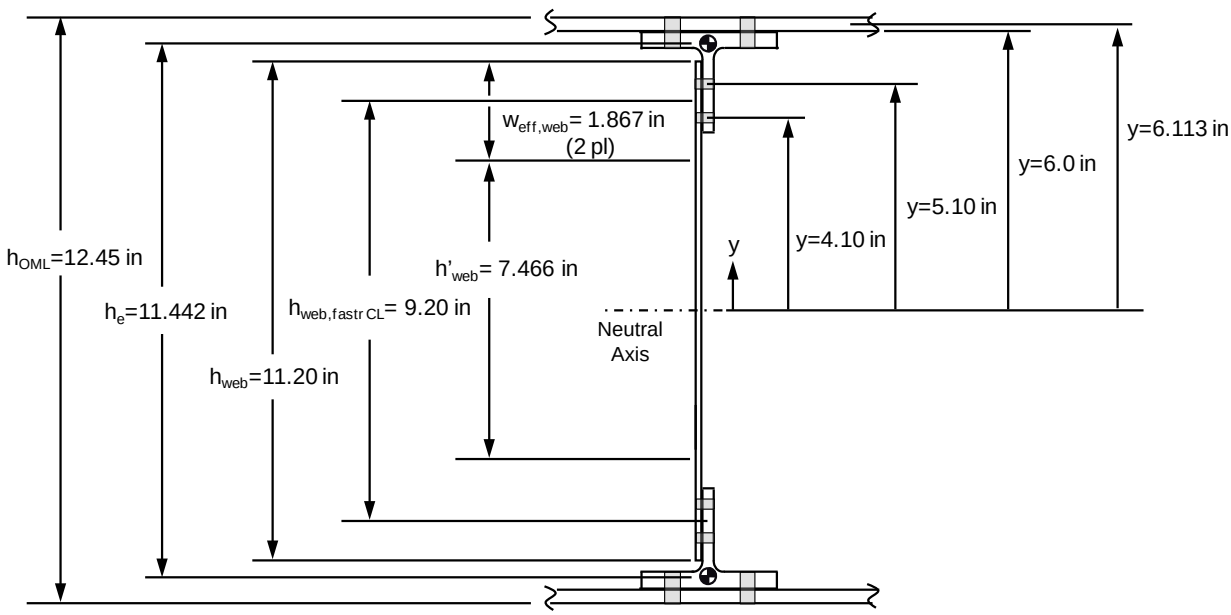

Beam Section Properties and Reference Dimensions

For reference, the contribution from the remaining portion of the web to the total beam first area moment is:
$\%\ Q_{web} = 0.634\ in^3/12.431\ in^3 \times 100 = 5.1\ \%$

The contribution from the remaining portion of the web to the total beam moment of inertia is:
$\%\ I_{web} = 3.156\ in^4/139.918\ in^4 \times 100 = 2.3\ \%$

Thus, it is seen that including the web material which is not part of the effective cap section does not significantly affect the resulting beam shear and bending stresses.

d) Determine the average shear stress acting on the web, using the shear load V = 20,000 lb

1. The shear flow at the web-to-tee attachment is calculated using the first area moment for the tee plus skin only:

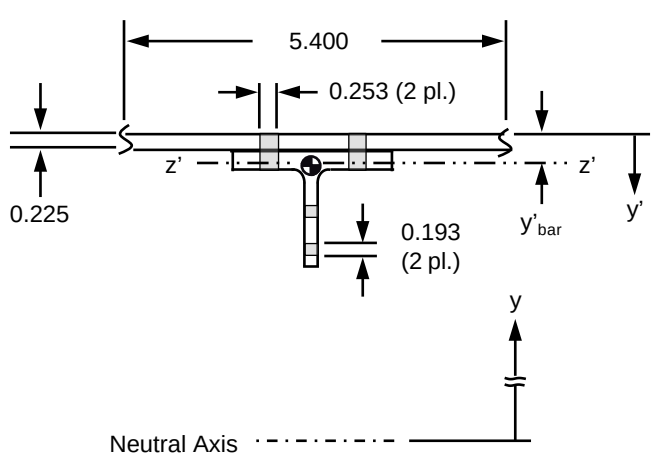

Copyright 2016 Lockheed Martin Corporation.
Note: The current version is always the version on the Lockheed Martin network.

Reference: IDAT SECTION V6.3a:

y'_{bar} = 0.431 in $A_{tee+skin}$ = 1.927 in^2 $I_{tee+skin}$ = 0.6964 in^4

The calculation of the first area moment for the tee plus skin is based on Equation 4.2.1-4:

$$Q_{tee+skin} = A_{tee+skin}\left(\frac{h_{OML}}{2} - y'_{bar}\right) = 1.927\ in^2\left(\frac{12.45\ in}{2} - 0.431\ in\right) = 11.165\ in^3$$

The shear flow at the web-to-tee attachment is calculated using Equation 6.5.1-1:

$$q_{att} = \frac{VQ_{tee+skin}}{I} = \frac{20{,}000\ lb\ (11.165\ in^3\ )}{139.918\ in^4} = 1{,}596\ lb/in$$

2. The maximum shear flow occurs at the neutral axis and is calculated using Equation 6.5.1-1:

$$q_{max} = \frac{VQ_{NA}}{I} = \frac{20{,}000\ lb\ (12.431\ in^3\ )}{139.918\ in^4} = 1{,}777\ lb/in$$

3. The average shear flow for the web is the average of the tee attachment and neutral axis shear flows:

$$q_{av} = \frac{q_{att} + q_{max}}{2} = \frac{1{,}596\ psi + 1{,}777\ psi}{2} = 1{,}687\ lb/in$$

The average shear stress for the web is:

$$f_{s,av} = \frac{q_{av}}{t_{web}} \quad \text{(Equation 6.5.5-1)}$$

$$f_{s,av} = \frac{1{,}687\ lb/in}{0.091\ in} = 18{,}538\ psi$$

e) Determine the average bending stress acting on the web at the tee attachment:

<u>Calculate the bending moment at the mid-span of Bay E</u> (Reference Figure 1a)

At x = 22.5 in, V = 20,000 lb

$M_{av} = V\ x = 20{,}000\ lb(22.5\ in) = 450{,}000\ in\text{-}lb$, average for Bay E

The bending stress at the tee attachment is:

$$f_b = \frac{M_{av}y}{I} \quad \text{(Equation 6.2.2-1). Reference the Step (c) illustration, y=4.60 in at the web-to-tee fastener centerline.}$$

$$f_b = \frac{450{,}000\ in\text{-}lb(4.60\ in)}{139.918\ in^4} = 14{,}794\ psi$$

f) Determine the web compression load due to beam curvature:

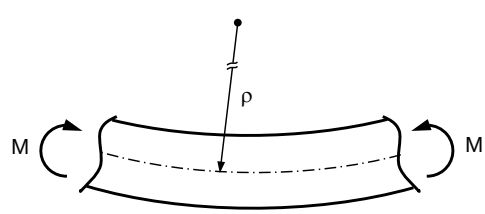

The radius of curvature in bending is approximated through use of Equation 6.2.5-18 (beam deflection equation):

$$\frac{1}{\rho} = \frac{M}{EI}$$

Copyright 2016 Lockheed Martin Corporation.
Note: The current version is always the version on the Lockheed Martin network.

$M = V\,x = 20{,}000\ lb(25.0\ in) = 500{,}000\ in\text{-}lb$, maximum for Bay E

Use of the skin modulus results in the minimum radius of curvature, which is slightly conservative: E=10.09 msi.

$$\rho = \frac{EI}{M} = \frac{10.09E6\ psi\ (139.918\ in^4)}{500{,}000\ in\text{-}lb} = 2{,}824\ in$$

The average web running load, at the neutral axis is:

$$w = \frac{P_{cap}}{\rho}\ \text{(Equation 6.2.5-15,-16), where } P_{cap} = \frac{M}{h_e}\ \text{(Equation 6.6.1-1)}$$

$h_e = 11.442\ in$, from the Step (c) illustration

$$P_{cap} = \frac{M}{h_e} = \frac{500{,}000\ in\text{-}lb}{11.442\ in} = \pm 43{,}699\ lb$$

$$w = \frac{-43{,}699\ lb}{2{,}824\ in} = -15.5\ \frac{lb}{in}$$

The total load for Bay E (5 in width) is:

$$W = -15.5\ \frac{lb}{in}(5.0\ in) = -78\ lb$$

This load is shared between the unbuckled web and stiffeners and is negligible in the design of the beam.

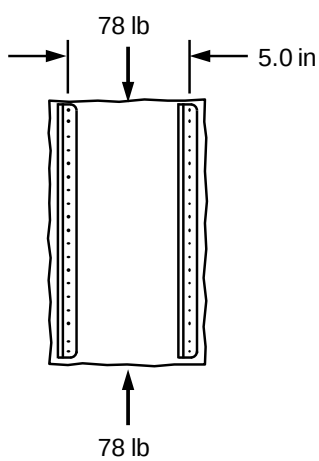

Note that although the crushing load due to curvature is negligible in this example, this may not be the case for beams which are more flexible and have smaller loaded radii of curvature. Wing boxes, particularly those of fighter aircraft, often have crushing loads which must be considered in the strength and stability analyses of spars and ribs

g) Determine the web buckling margin of safety using the shear and bending stresses calculated in Steps (d) and (e): *(Note that this analysis step corresponds to Item 1 in Table 6.6.1-1.)*

The stability analysis uses the shear and bending stresses acting on the panel as shown.

Copyright 2016 Lockheed Martin Corporation.
Note: The current version is always the version on the Lockheed Martin network.

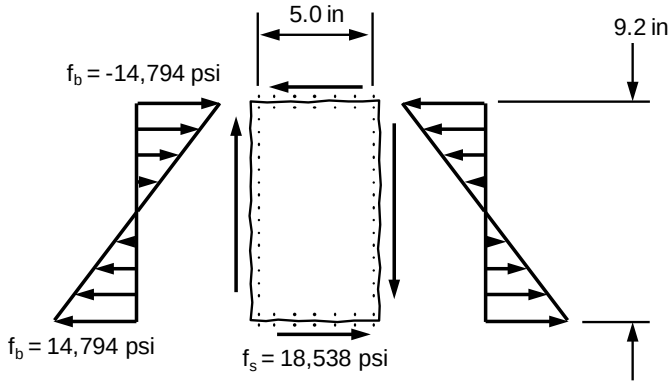

Shear component, reference Section 10.3.2.2:

$$\frac{b}{a} = \frac{5.0\ in}{9.2\ in} = 0.543; \quad \frac{b}{t} = \frac{5.0\ in}{0.091\ in} = 54.95; \quad \text{Using Figure 10.3.2-15, } k_s = 8.1$$

$$K = \frac{k_s\,\pi^2}{12(1-\upsilon^2)} = \frac{8.1\pi^2}{12(1-(0.33)^2)} = 7.48 \ \text{(Equation 10.3.1-5)}$$

$$\left(\frac{b}{t}\right)_e = \frac{b}{t\sqrt{K}} = \frac{5.0\ in}{0.091\ in\ \sqrt{7.48}} = 20.09 \ \text{(Equation 10.3.1-4)}$$

Using Figure 10.3.1-10, Curve 5: $F_{s,cr} = 25.5\ ksi$

Correcting to 160°F: $F_{s,cr(160°F)} = F_{s,cr(RT)}\left(\frac{E_{c(160°F)}}{E_{c(RT)}}\right) = 25.5\ ksi\left(\frac{10.29\ msi}{10.50\ msi}\right) = 24.99\ ksi$

Note that the shear buckling curves in Section 10.3.2.2 use the compression modulus as their basis, so the temperature correction is based on E_c.

$$R_s = \frac{18{,}538\ psi}{24{,}990\ psi} = 0.742$$

Bending component, reference Section 10.3.2.3: It is assumed that the double fastener rows at the upper and lower flange attachments provide 50% edge fixity at these edges, with the remaining edges simply supported. Given the relative thicknesses of the web and attaching flange leg, with two rows of HL18-6 fasteners, this assumption is conservative. The buckling coefficient is the average of the all edges simply supported case (Figure 10.3.2-8) and the compression edge fixed, remaining edges simply supported case (Figure 10.3.2-10)[1].

$$\frac{a}{b} = \frac{5.0\ in}{9.2\ in} = 0.543; \quad d = \frac{b}{2} = \frac{9.2\ in}{2} = 4.6\ in, \quad \phi = \frac{b}{d} = 2.0$$

Using Figure 10.3.2-8, $a/b \le 3.0$, the all edges simply supported buckling coefficient is: $k_{b,ss} = 24.5$

Using Figure 10.3.2-10, $a/b \le 2.4$, the compression edge fixed buckling coefficient is: $k_{b,fix} = 42.8$

The average buckling coefficient for the all edges simply supported and compression edge fixed cases is: $k_{b,av} = 33.65$

$$K = \frac{k_{b,av}\ \pi^2}{12(1-\upsilon^2)} = \frac{33.65\ \pi^2}{12(1-(0.33)^2)} = 31.06 \ \text{(Equation 10.3.1-5)}$$

[1] The buckling coefficient for the bending case is formulated with the compression edge fixed and the tension edge simply supported, and is used to represent the upper and lower edges fixed case.

Copyright 2016 Lockheed Martin Corporation.
Note: The current version is always the version on the Lockheed Martin network.

$$\left(\frac{b}{t}\right)_e = \frac{b}{t\sqrt{K}} = \frac{9.2\ in}{0.091\ in\ \sqrt{31.06}} = 18.14 \text{ (Equation 10.3.1-4)}$$

Using Figure 10.3.1-7, Curve 5: $F_{b,cr} = 32.5\ ksi$

Correcting to 160°F: $F_{b,cr(160°F)} = F_{b,cr(RT)}\left(\frac{E_{c(160°F)}}{E_{c(RT)}}\right) = 32.5\ ksi\left(\frac{10.29\ msi}{10.50\ msi}\right) = 31.85\ ksi$

Note that the temperature correction for the buckling case uses the ratio of the compression moduli.

$$R_b = \frac{14{,}794\ psi}{31{,}850\ psi} = 0.464$$

<u>The web buckling margin of safety is written using Equation 10.3.2-9</u>:

$$MS_{ult} = \frac{1}{\sqrt{{R_b}^2 + {R_s}^2}} - 1 = \frac{1}{\sqrt{(0.464)^2 + (0.742)^2}} - 1 = +0.14$$

h) Determine the web strength margin of safety at the beam neutral axis:
(Note that this analysis step corresponds to Item 2 in Table 6.6.1-1.)

The strength check uses maximum shear stress which is located at the beam neutral axis; there is no bending component at this location. The web shear flow from Step (d) is: $q_{NA} = 1{,}777\ lb/in$.

$$f_{s,max} = \frac{q_{NA}}{t_{web}} = \frac{1{,}777\ lb/in}{0.091\ in} = 19{,}527\ psi \text{ (Equation 6.5.5-1)}$$

The shear stress at the neutral axis, $f_{s,max}$, is a gross stress, which must be modified to reflect the removed area of the stiffener attachment holes. From Figure 1a, the HL18-5 holes are 0.159 in diameter at 0.78 in pitch. Using Equation 5.2.3-12, the net section reduction factor, η, is:

$$\eta = 1 - \left[\frac{\Sigma D_i t}{A_g}\right] = 1 - \left[\frac{0.159(0.091\ in)}{(0.78\ in)(0.091\ in)}\right] = 0.796$$

The web net shear stress is:

$$f_{s,max}(net) = \frac{f_{s,max}}{\eta} = \frac{19{,}527\ psi}{0.796} = 24{,}531\ psi$$

The web allowable shear stress is:

F_{su} = 47,520 psi, at 160° F (7075-T6 sheet, Table 1c)

The web strength margin of safety at the neutral axis is calculated using Equation 6.5.1-2:

$$MS_{ult} = \frac{F_{su}}{f_{s,max}} - 1 = \frac{47{,}520\ psi}{24{,}531\ psi} - 1 = +0.94$$

Note that $\frac{F_{sy}}{F_{su}} = 0.82$; the Limit load check is less critical than Ultimate.

Copyright 2016 Lockheed Martin Corporation.
Note: The current version is always the version on the Lockheed Martin network.

i) Determine the web strength margins of safety at the tee attachment:
(Note that this analysis step corresponds to Item 2 in Table 6.6.1-1)

Checks are required through Sections F and G as shown:

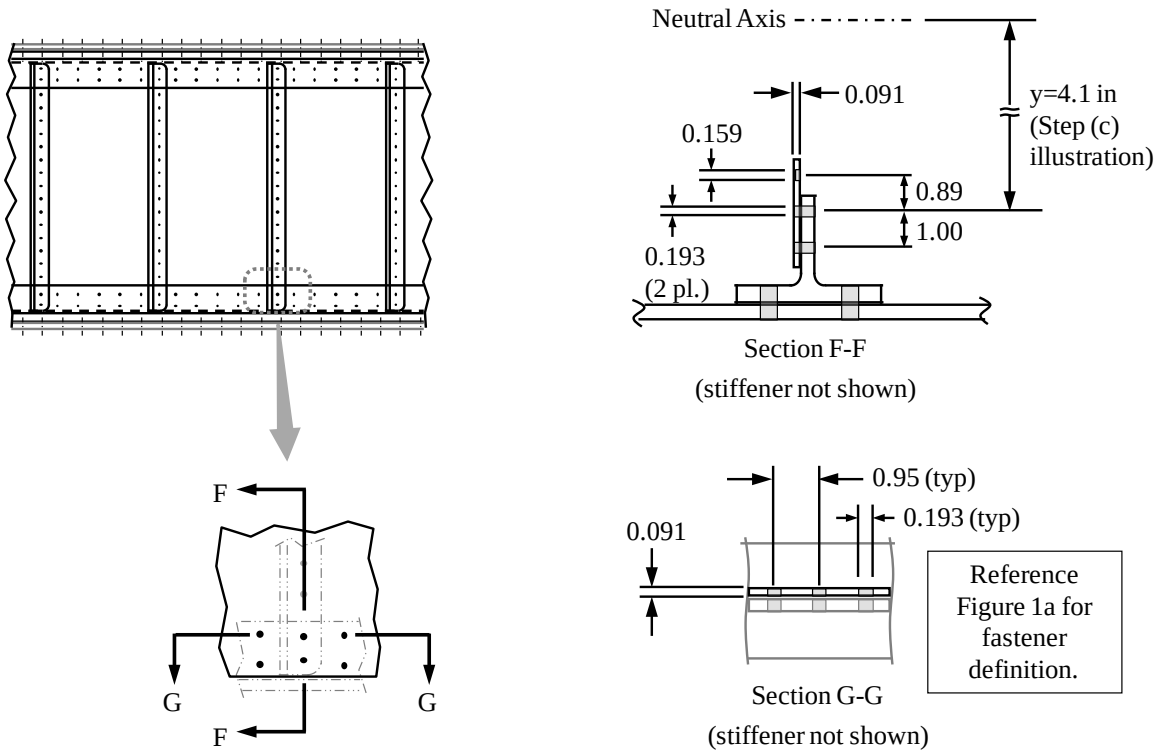

<u>Section F-F</u>:

Using Equation 5.2.3-12, the net section reduction factor, η, through the web at Section F-F is:

$$\eta = 1 - \left[\frac{\Sigma D_i t}{A_g}\right] = 1 - \left[\frac{0.193(0.091\ in)}{\left(\frac{1.00\ in + 0.89\ in}{2}\right)(0.091\ in)}\right] = 0.796$$

The shear stress at the upper fastener is calculated using the area of the effective cap section from Step (b) and the centroidal height and moment of inertia from Step (c):

$$Q_{cap} = A_{cap}\left(\frac{h_e}{2}\right) = 2.062\ in^2\left(\frac{11.442\ in}{2}\right) = 11.797\ in^3 \quad \text{(Equation 4.2.1-4)}$$

$$q_{cap} = \frac{VQ_{cap}}{I} = \frac{20{,}000\ lb\ (11.797\ in^3\ )}{139.918\ in^4} = 1{,}686\ lb/in \quad \text{(Equation 6.5.1-1)}$$

$$f_s = \frac{q_{cap}}{t_{web}} = \frac{1{,}686\ lb/in}{0.091\ in} = 18{,}527\ psi \quad \text{(Equation 6.5.5-1)}$$

The web net shear stress is:

$$f_s(net) = \frac{f_s}{\eta} = \frac{18{,}527\ psi}{0.796} = 23{,}275\ psi$$

Copyright 2016 Lockheed Martin Corporation.
Note: The current version is always the version on the Lockheed Martin network.

The web allowable shear stress is:

F_{su} = 47,520 psi, at 160° F (7075-T6 sheet, Table 1c)

The web shear stress ratio is:

$$R_s = \frac{f_s}{F_{su}} = \frac{23{,}275\ psi}{47{,}520\ psi} = 0.490$$

The web bending stress at the upper fastener location is:

$M = 500{,}000\ in\text{-}lb$, from Step (f)

$y = 4.1\ in;\ I = 139.918\ in^4$, from the Step (c)illustration

$$f_{b,cap} = \frac{My}{I} = \frac{500{,}000\ in\text{-}lb(4.1\ in)}{139.918\ in^4} = 14{,}651\ psi \quad \text{(Equation 6.2.2-1)}$$

The beam bending stress is based on net section properties, so further reduction is not required.

The web allowable bending stress is:

F_{tu} = 75,200 psi, at 160° F (7075-T6 sheet, Table 1c)

The bending stress ratio is:

$$R_b = \frac{f_b}{F_{tu}} = \frac{14{,}651\ psi}{75{,}200\ psi} = 0.195$$

The strength margin of safety for the web at Section F-F is written using Equation 6.6.1-1:

$$MS_{ult} = \frac{1}{\sqrt{{R_b}^2 + {R_s}^2}} - 1 = \frac{1}{\sqrt{(0.195)^2 + (0.490)^2}} - 1 = +0.90$$

By inspection, the Limit check is not critical.

<u>Section G-G</u>:

Using Equation 5.2.3-12, the net section reduction factor, η, through Section G-G is:

$$\eta = 1 - \left[\frac{\Sigma D_i t}{A_g}\right] = 1 - \left[\frac{0.193(0.091\ in)}{(0.95\ in)(0.091\ in)}\right] = 0.797$$

The check at this location is made using the shear stress only. The gross shear stress at the upper fastener row is the same as that calculated at Section F-F, Step (i):

$$f_s = \frac{q_{cap}}{t_{web}} = 18{,}527\ psi \quad \text{(Equation 6.5.5-1)}$$

The web net shear stress is:

$$f_s(net) = \frac{f_s}{\eta} = \frac{18{,}527\ psi}{0.797} = 23{,}246\ psi$$

The web allowable shear stress is:

F_{su} = 47,520 psi, at 160° F (7075-T6 sheet, Table 1c)

The web strength margin of safety at Section G-G is calculated using Equation 6.5.1-2:

$$MS_{ult} = \frac{F_{su}}{f_s(net)} - 1 = \frac{47{,}520\ psi}{23{,}246\ psi} - 1 = +1.04$$

Copyright 2016 Lockheed Martin Corporation.
Note: The current version is always the version on the Lockheed Martin network.

By inspection, the Limit check is not critical.

j) Determine the net-section strength margins of safety for the lower cap skin:
(Note that this analysis step corresponds to Item 3 in Table 6.6.1-1.)

By inspection, the skin is the critical component in the cap. Compared with the tee and the web, the skin has the largest bending stress (based on distance from the beam neutral axis) and the lowest tensile strength (F_{tu}). The bending stress is calculated using Equation 6.2.2-1:

$f_{b,OML} = \frac{My}{I}$, where M=500,000 in-lb and y= $h_{OML}/2$

$M = 500{,}000\ in\text{-}lb$, from Step (f)

$h_{OML} = 12.45\ in;\ I = 139.918\ in^4$, from Step (c)

$$f_{b,OML} = \frac{500{,}000\ in\text{-}lb(12.45\ in/2)}{139.918\ in^4} = 22{,}245\ psi$$

The beam bending stress is based on net section properties, so further reduction is not required.

The skin allowable bending stress is:

F_{tu} = 63,920 psi, at 160° F (7075-T7351 plate, Table 1c)

The skin strength margin of safety at the beam OML is:

$$MS_{ult} = \frac{F_{tu}}{f_{b,OML}} - 1 = \frac{63{,}920\ psi}{22{,}245\ \ psi} - 1 = +1.87$$

By inspection, the Limit check is not critical.

Copyright 2016 Lockheed Martin Corporation.
Note: The current version is always the version on the Lockheed Martin network.

k) Determine the net-section strength margins of safety for the lower tee. This check is done per Section 6.6.1-3.
(Note that this analysis step corresponds to Item 3 in Table 6.6.1-1.)

The tee loading is axial (due to bending) and shear transfer between the web and skin, so the generalized free body diagram given in Fig. 6.6.1-4(a) reduces to that shown:

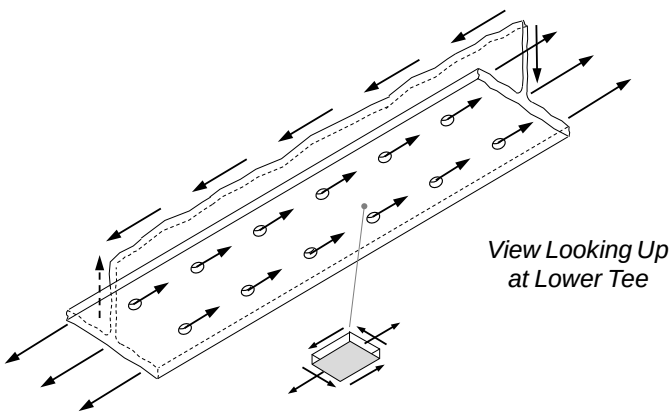

The bending stress at the upper cap OML is calculated using Equation 6.6.2-1:

$f_b = \frac{My}{I}$, where y is measured to the the lower cap outer fibers.

$M = 500{,}000\ in\text{-}lb$, from Step (f)

$y = 6.0\ in;\ I = 139.918\ in^4$, from the Step (c) illustration

$$f_b = \frac{500{,}000\ in\text{-}lb(6.0\ in)}{139.918\ in^4} = 21{,}441\ psi$$

The beam bending stress is based on net section properties, so further reduction is not required.

The allowable bending stress for the tee is:

F_{tu} = 79,900 psi, at 160° F (7075-T7651 extrusion, Table 1c)

The bending stress ratio for the tee is:

$$R_b = \frac{f_b}{F_{tu}} = \frac{21{,}441\ psi}{79{,}900\ psi} = 0.268$$

The shear load at the tee flange intersection is calculated using the first area moment for the skin and attaching flange alone:

Copyright 2016 Lockheed Martin Corporation.
Note: The current version is always the version on the Lockheed Martin network.

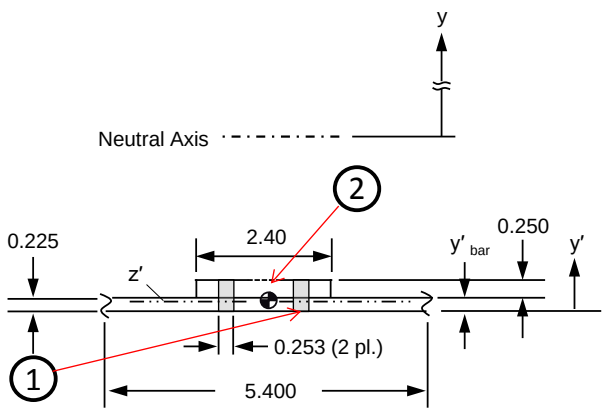

Reference: IDAT SECTION V6.3a:

y'_{bar} = 0.184 in $\quad$ $A_{tee+skin}$ = 1.575 in^2

$$Q_{cap+skin} = A_{cap+skin}\left(\frac{h_{OML}}{2} - y'_{bar}\right) = 1.575\ in^2\left(\frac{12.45\ in}{2} - 0.184\ in\right) = 9.515\ in^3 \quad \text{(Equation 4.2.1-4)}$$

$$q = \frac{VQ_{cap+skin}}{I} = \frac{20{,}000\ lb\ (9.515\ in^3\ )}{139.918\ in^4} = 1{,}360\ lb/in \quad \text{(Equation 6.5.1-1)}$$

Location 1: The shear stress for the tee is:

$$f_s = \frac{q}{t_{tee}} = \frac{1{,}360\ lb/in}{0.250\ in} = 5{,}440\ psi \quad \text{(Equation 6.5.5-1)}$$

Using Equation 5.2.3-12, the net section reduction factor, η, through the tee lower flange is:

$$\eta = 1 - \left[\frac{\Sigma D_i t}{A_g}\right] = 1 - \left[\frac{0.253(0.250\ in)}{(1.00\ in)(0.250\ in)}\right] = 0.747$$

Note that the reduction factor is used for the shear loading only, since the bending stress uses net section properties.

The net shear stress for the tee is:

$$f_s(net) = \frac{f_s}{\eta} = \frac{5{,}440\ psi}{0.747} = 7{,}282\ psi$$

The allowable shear stress for the tee is:

F_{su} = 44,550 psi, at 160° F (7075-T7651 extrusion, Table 1c)

The shear stress ratio for the tee is:

$$R_s = \frac{f_s}{F_{su}} = \frac{7{,}282\ psi}{44{,}550\ psi} = 0.163$$

The strength margin of safety for the tee is written using Equation 6.6.1-1:

$$MS_{ult} = \frac{1}{\sqrt{{R_b}^2 + {R_s}^2}} - 1 = \frac{1}{\sqrt{(0.268)^2 + (0.163)^2}} - 1 = +2.19$$

By inspection, the Limit check is not critical.

Copyright 2016 Lockheed Martin Corporation.
Note: The current version is always the version on the Lockheed Martin network.

6.6.3.1.1 Location 2: This is a check at the tee-flange junction for gross shear stress.

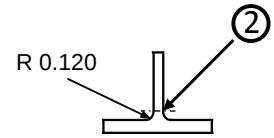

From Step c, y is:

$y = 6.0"\text{-}0.25"\text{-}0.120" = 5.63"$

The Bending Stress is:

$$f_b = \frac{500{,}000\ in\#(5.63")}{139.918 in^4} = 20{,}119\ psi$$

F_{tu}=79.9 ksi

$$R_b = \frac{f_b}{F_{tu}} = \frac{20{,}119}{79{,}900} = 0.252$$

The shear stress is the total at the Junction:

q=1360 #/in

$$f_s = \frac{q}{t_{tee}} = \frac{1360\ \#/in}{0.20} = 6{,}800\ psi$$

F_{su} = 44,500 psi

$$R_s = \frac{f_s}{F_{su}} = \frac{6{,}800}{44{,}500} = 0.153$$

$$MS_{ult} = \frac{1}{\sqrt{{R_b}^2 + {R_s}^2}} - 1 = \frac{1}{\sqrt{(0.252)^2 + (0.153)^2}} - 1 = +2.39$$

The margin at location 2 is less critical than the margin at location 1.

l) Determine the crippling margin of safety for the upper cap tee:

(Note that this analysis step corresponds to Item 4 in Table 6.6.1-1.)

The gross area of the tee is:

$$A_{tee} = 2.40\ in(0.250\ in) + (2.40\ in - 0.250\ in)(0.200\ in) = 1.03\ in^2$$

The axial load developed in the tee is the bending stress at the cap centroid multiplied by the tee area:

$M = 500{,}000\ in\text{-}lb$, from Step (f)

$h_e = 11.442\ in;\ I = 139.918\ in^4$, from Step (c)

$$P_{tee} = \frac{M(h_e/2)}{I} A_{tee} = \frac{500{,}000\ in\text{-}lb(11.442/2)}{139.918\ in^4}(1.03\ in^2) = 21{,}057\ lb$$

The allowable crippling load for the tee is the crippling stress multiplied by the tee area:

$F_{cc} = 62.881\ ksi$, given in the problem definition

$$P_{cc} = F_{cc}A_{tee} = 62{,}881\ psi(1.03\ in^2) = 64{,}767\ lb$$

The crippling margin of safety for the tee is:

$$MS_{ult} = \frac{P_{cc}}{P_{tee}} - 1 = \frac{64{,}767\ lb}{21{,}057\ lb} - 1 = +2.08$$

Note that since the tee flanges are attached to the skin and web, initial buckling checks for the individual flanges are not required.

Copyright 2016 Lockheed Martin Corporation.
Note: The current version is always the version on the Lockheed Martin network.

m) Determine the inter-rivet buckling margins of safety for the upper cap skin and web:
(Note that this analysis step corresponds to Item 6 in Table 6.6.1-1.)

Skin:

The axial stress at the skin centerline is:

$M = 500{,}000\ in\text{-}lb$, from Step (f)

$y = 6.113\ in;\ I = 139.918\ \ in^4$, from the Step (c) illustration

$$f_{skin} = \frac{My}{I} = \frac{500{,}000\ in\text{-}lb(6.113)}{139.918\ \ in^4} = 21{,}845\ psi \quad \text{(Equation 6.2.2-1)}$$

From Step (a), the skin inter-rivet buckling stress is: F_{IR} = 54.91 ksi

The inter-rivet buckling margin for the skin is calculated using Equation 8.6.1-9:

$$MS_{ult} = \frac{F_{ir(160°F)}}{f_{skin}} - 1 = \frac{54{,}910\ psi}{21{,}845\ psi} - 1 = +1.51$$

Web:

The axial stress at the web-to tee upper attachment is:

$M = 500{,}000\ in\text{-}lb$, from Step (f)

$y = 5.10\ in;\ I = 139.918\ in^4$, from the Step (c) illustration

$$f_{web} = \frac{My}{I} = \frac{500{,}000\ in\text{-}lb(5.10\ in)}{139.918\ in^4} = 18{,}225\ psi$$

From Step (a), the web inter-rivet buckling stress is: F_{IR} = 66.98 ksi

The inter-rivet buckling margin for the web is calculated using Equation 8.6.1-9:

$$MS_{ult} = \frac{F_{ir(160°F)}}{f_{web}} - 1 = \frac{66{,}980\ psi}{18{,}225\ psi} - 1 = +2.68$$

n) Determine the required minimum moment of inertia for the stiffeners:
(Note that this analysis step corresponds to Item 10 in Table 6.6.1-1.)

Since the curvature-based crushing loads from Step (f) are negligible and there are no intermediate applied loads, the stiffeners serve as panel-breakers only. The procedure to determine the required moment of inertia is given in Section 6.6.1.10.

$K_s = 7.48$, from Step (g)

$h = panel\ height = 9.2\ in\ (between\ attachment\ mid\text{-}lines)$

$d = panel\ width = 5.0\ in$

$t = web\ thickness = 0.091\ in$

Using Equation 6.6.1-2:

$$\frac{I_{stiffener}}{d\,t^3} = \frac{0.0217}{\left(\frac{d}{h\sqrt{K_s}}\right)^{8/3}} = \frac{0.0217}{\left(\frac{5.0\ in}{9.2\ in\sqrt{7.48}}\right)^{8/3}} = 1.614$$

Copyright 2016 Lockheed Martin Corporation.
Note: The current version is always the version on the Lockheed Martin network.

$$I_{stiffener}=1.614(d)(t)^3\left(\frac{E_t(RT)}{E_t(160°F)}\right)=1.614(5.0\text{ in})(0.091\text{ in})^3\left(\frac{10.4\text{ msi}}{10.19\text{ msi}}\right)=0.006207\text{ in}^4$$

The stiffener moment of inertia about the centroidal axis parallel to the web is 0.02363 in^4, which exceeds the required value. Note that the 0.072 in stiffener thickness meets the minimum requirements from Table 6.6.1-2.

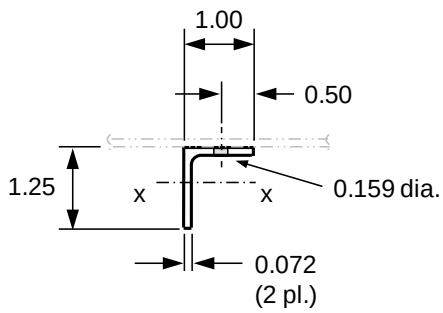

Reference: IDAT SECTION V6.3a:
$I_{x\text{-}x}$ = 0.02363 in^4 (with fastener hole area removed)

o) Determine the margins of safety for the web-to tee joint:
(Note that this analysis step corresponds to Item 11 in Table 6.6.1-1.)

The shear flow at the web-to-tee attachment is used from Step (d):

$q_{att} = 1{,}596\ lb/in$

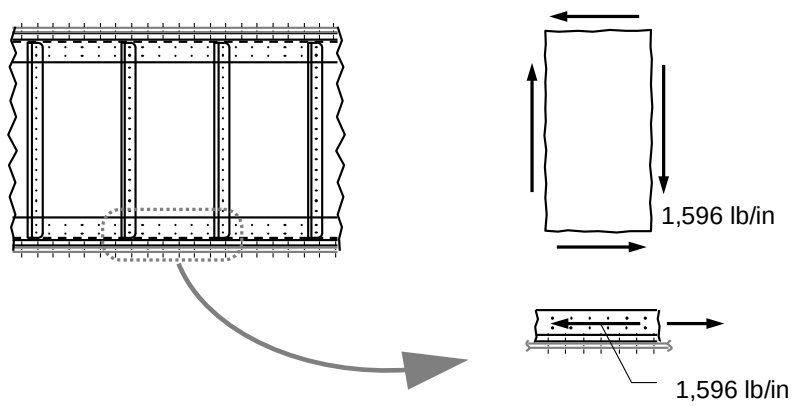

The fastener load using the 0.95 in pitch (Figure 1a) is:

$$P = \frac{q(pitch)}{2\ rows} = \frac{1{,}596\ lb/in\ (0.95\ in)}{2\ rows} = 758\ lb$$

Published joint allowable strengths are not available for this installation, so the minimum of the fastener shear and calculated bearing allowable loads are used.

Web, 7075-T6 sheet: F_{bru} = 146.4 ksi

HL18-6 : P_{shr} = 2,667 lb at 160°F

k_{wpb} = 0.82, Reference Table 3.3.3-3

The allowable web bearing load is calculated using Equation 5.2.3-3:

Copyright 2016 Lockheed Martin Corporation.
Note: The current version is always the version on the Lockheed Martin network.

$P_{bru} = k_{wpb}\, F_{bru} d\, t = 0.82$(146,400 psi)(0.190 in)(0.091 in) = 2,076 lb

The web allowable bearing load of 2,076 lb is less than the allowable fastener shear load of 2,667 lb. The web bearing margin of safety at the web-to-tee joint is calculated using Equation 5.2.3-7:

$$MS_{ult} = \frac{P_{bru}}{P} - 1 = \frac{2{,}076\ lb}{758\ lb} - 1 = +1.74$$

Note that $\frac{F_{bry}}{F_{bru}} = 0.81$; the Limit load check is less critical than Ultimate.

p) Determine the margins of safety for the skin-to-tee joint:

(Note that this analysis step corresponds to Item 12 in Table 6.6.1-1.)

The shear flow at the skin-to-tee joint is calculated using the first area moment for the skin alone:

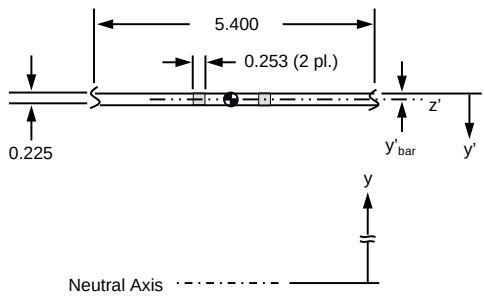

Reference: IDAT SECTION V6.3a:

y'_{bar} = 0.113 in A_{skin} = 1.101 in^2 I_{skin} = 0.004645 in^4

$$Q_{skin} = A_{skin}\left(\frac{h_{OML}}{2} - y'_{bar}\right) = 1.101\ in^2\left(\frac{12.45\ in}{2} - 0.113\ in\right) = 6.729\ in^3 \quad \text{(Equation 4.2.1-4)}$$

$$q = \frac{VQ_{skin}}{I} = \frac{20{,}000\ lb\ (6.729\ in^3\ )}{139.918\ in^4} = 962\ lb/in \quad \text{(Equation 6.5.1-1)}$$

The fastener load using the 1.00 in pitch (Figure 1a) is:

$$P = \frac{q(pitch)}{2\ rows} = \frac{962\ lb/in\ (1.00\ in)}{2\ rows} = 481\ lb$$

Published joint allowable strengths are not available for this installation, so the minimum of the fastener shear and calculated bearing allowable loads are used:

Skin, 7075-T7351 plate: F_{bru} = 119.87 ksi

HL21-8 : P_{shr} = 4,613 lb at 160°F

k_{wpb} = 0.82, Reference Table 3.3.3-3

The allowable skin bearing load is calculated using Equation 5.2.3-3:

$P_{bru} = k_{wpb}\, F_{bru} d\, t = 0.82$(119,870 psi)(0.250 in)(0.225 in) = 5,529 lb, which is greater than the fastener shear allowable of 4,613 lb.

The fastener shear margin of safety for the skin-to-tee joint is calculated using Equation 5.2.3-8:

$$MS_{ult} = \frac{P_{shr}}{P} - 1 = \frac{4{,}613\ lb}{481\ lb} - 1 = +8.59$$

By inspection, the Limit check is not critical.

Copyright 2016 Lockheed Martin Corporation.
Note: The current version is always the version on the Lockheed Martin network.

q) Determine the margins of safety for the stiffener termination joint:
(Note that this analysis step corresponds to Item 13 in Table 6.6.1-1.)

The crushing load from Step (f) is the only stiffener axial load. Conservatively assuming all crushing load is carried by the stiffener alone, joint strength is not critical by inspection.

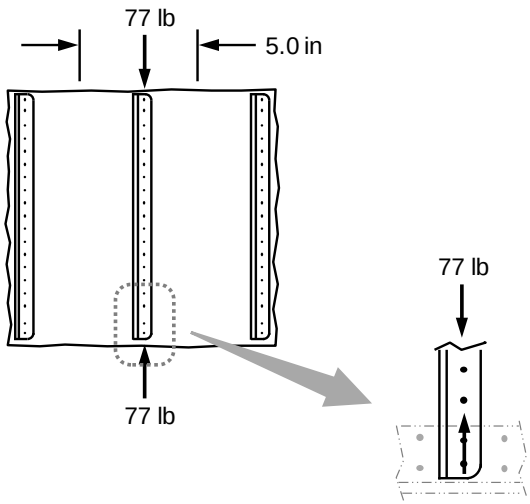

Copyright 2016 Lockheed Martin Corporation.
Note: The current version is always the version on the Lockheed Martin network.

The Margins of Safety for the exact solution are summarized as shown:

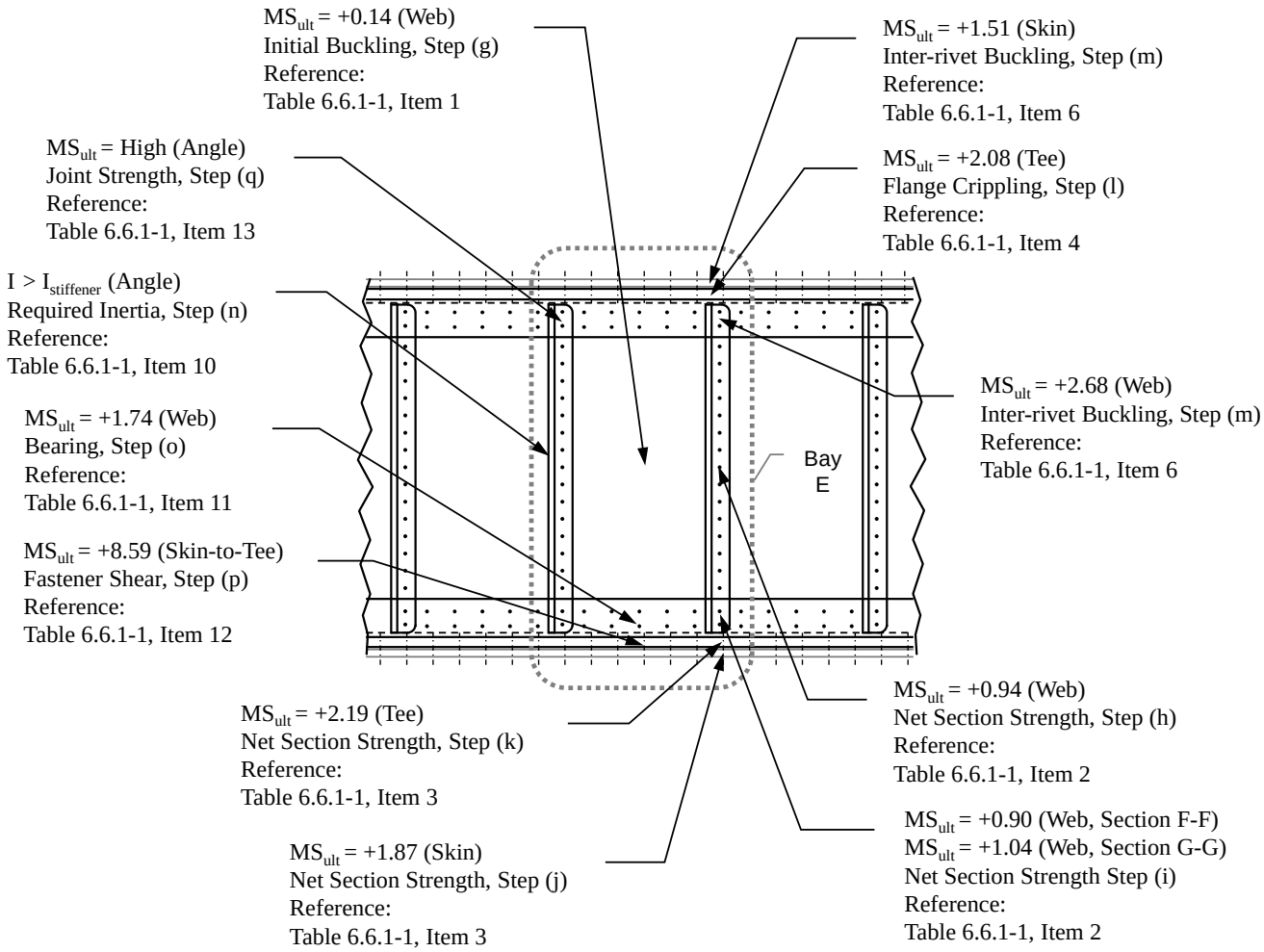

Note that the Margins of Safety are shown as calculated numerically, even where they are high (usually greater than +1.00 or +2.00). Refer to program policy regarding the reporting of high margins.

It is seen that the cap margins of safety are greater than would be necessary purely to satisfy strength requirements. Part of the excess capability results from effective skin which contributes to the beam bending stiffness. While iteration may result in lower overall beam weight, beam bending stiffness should be concentrated in the caps, as described in Section 6.6. Reducing the cap dimensions (and thus the overall bending stiffness) in a shear resistant beam increases the web bending stress, which usually increases web thickness. Trade studies are usually required to arrive at minimum weight.

Copyright 2016 Lockheed Martin Corporation.
Note: The current version is always the version on the Lockheed Martin network.

6.6.1.18 Example Calculation – Shear Resistant Beam Strength Analysis, No Normal Pressure (Approximate Solution)

Given:
Example 6.6.1.17 is revised to reflect the use of approximate solutions to calculate the beam shear and bending stresses.
Note that only the affected portions of the example are shown; unchanged sections are not repeated here.

Solution Step:

a) Determine the section properties of the beam using the effective cap section only:

From Example 6.6.1, Step (b), the effective cap section is shown:

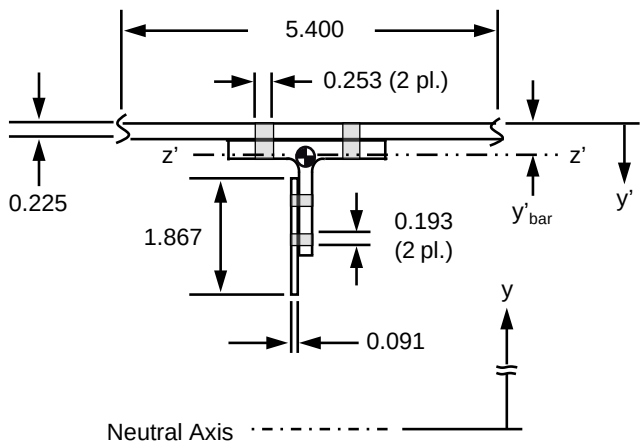

Reference: IDAT SECTION V6.3a:
y'_{bar} = 0.504 in A_{cap} = 2.062 in^2 I_{cap} = 0.8919 in^4

From the Example 6.6.1 Step (c) illustration:
The beam OML height is: h_{OML}= 12.450 in
The distance between cap centroids is: h_e = 11.442 in

The approximate beam moment of inertia is calculated, based on Equation 4.2.1-8:

$$I = 2\left[I_{cap} + A_{cap}\left(\frac{h_e}{2}\right)^2\right] = 2\left[0.8919\ in^4 + 2.062\ in^2\left(\frac{11.442\ in}{2}\right)^2\right] = 136.762\ in^4$$

Note that the calculations in Step (i) use the *gross* areas of the effective cap section and tee alone. These are shown here for reference:

Copyright 2016 Lockheed Martin Corporation.
Note: The current version is always the version on the Lockheed Martin network.

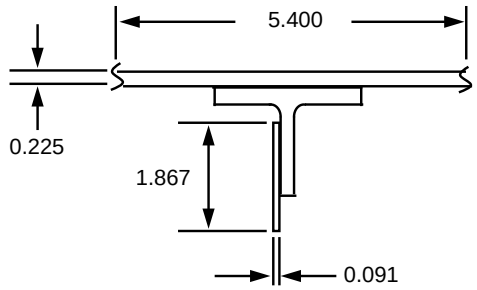

$A_{cap,gross} = 2.415\ in^2$

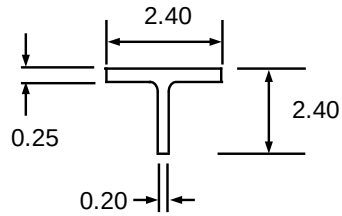

$A_{tee,gross} = 1.03\ in^2$

b) Determine the average shear stress acting on the web, using the shear load:

$V = 20{,}000\ lb$, from Example 6.6.1.17, Figure 1a
$h_e = 11.442\ in$, from Example 6.6.1.17, Step (c)
$t_{web} = 0.091\ in$, from Example 6.6.1.17, Figure 1a

$$q = \frac{V}{h_e} = \frac{20{,}000\ lb}{11.442\ in} = 1{,}748\ lb/in \quad \text{(Equation 6.5.5-1)}$$

$$f_{s,av} = \frac{q}{t_{web}} = \frac{1{,}748\ lb/in}{0.091\ in} = 19{,}209\ \text{psi} \quad \text{(Equation 6.5.5-1)}$$

c) The average bending stress acting on the web at the tee attachment from Example 6.6.1 Step (e):

From Example 6.6.1.17, Step (e), the bending moment at the Bay E mid span is: $M_{av} = 450{,}000\ in\text{-}lb$, average for Bay E

The bending stress at the tee attachment is:

$f_b = \frac{M_{av}y}{I}$ (Equation 6.2.2-1). Reference the Step (c) illustration, y=4.60 in at the web-to-tee fastener centerline.

$$f_b = \frac{450{,}000\ in\text{-}lb(4.60)}{136.762\ in^4} = 15{,}136\ psi$$

d) From Example 6.6.1.17, Step (f), the web compression load due to curvature is negligible.

e) Determine the web buckling margin of safety using the shear and bending stresses calculated in Steps (b) and (c):
(Note that this analysis step corresponds to Item 1 in Table 6.6.1-1.)

The stability analysis uses the shear and bending stresses acting on the panel as shown.

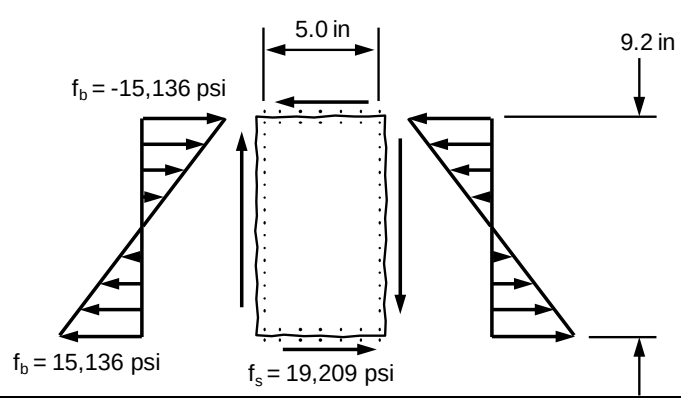

Copyright 2016 Lockheed Martin Corporation.
Note: The current version is always the version on the Lockheed Martin network.

Shear component, reference Section 10.3.2.2:

From Example 6.6.1.17, Step (g):

$$F_{s,cr(160°F)} = 24.99\ ksi$$

$$R_s = \frac{19{,}209\ psi}{24{,}990\ psi} = 0.769$$

Bending component, reference Section 10.3.2.3:

From Example 6.6.1.17, Step (g):

$$F_{b,cr(160°F)} = 31.85\ ksi$$

$$R_b = \frac{15{,}136\ psi}{31{,}850\ psi} = 0.475$$

The web buckling margin of safety is written using Equation 10.3.2-9:

$$MS_{ult} = \frac{1}{\sqrt{{R_b}^2 + {R_s}^2}} - 1 = \frac{1}{\sqrt{(0.475)^2 + (0.769)^2}} - 1 = +0.11$$

f) Determine the web strength margins of safety at the tee attachment:
(Note that this analysis step corresponds to Item 2 in Table 6.6.1-1.)

Checks are required through Sections F and G as shown below. *Note that the check at the neutral axis is not critical, because the web average shear stress from Step (b) is used and there is no bending interaction.*

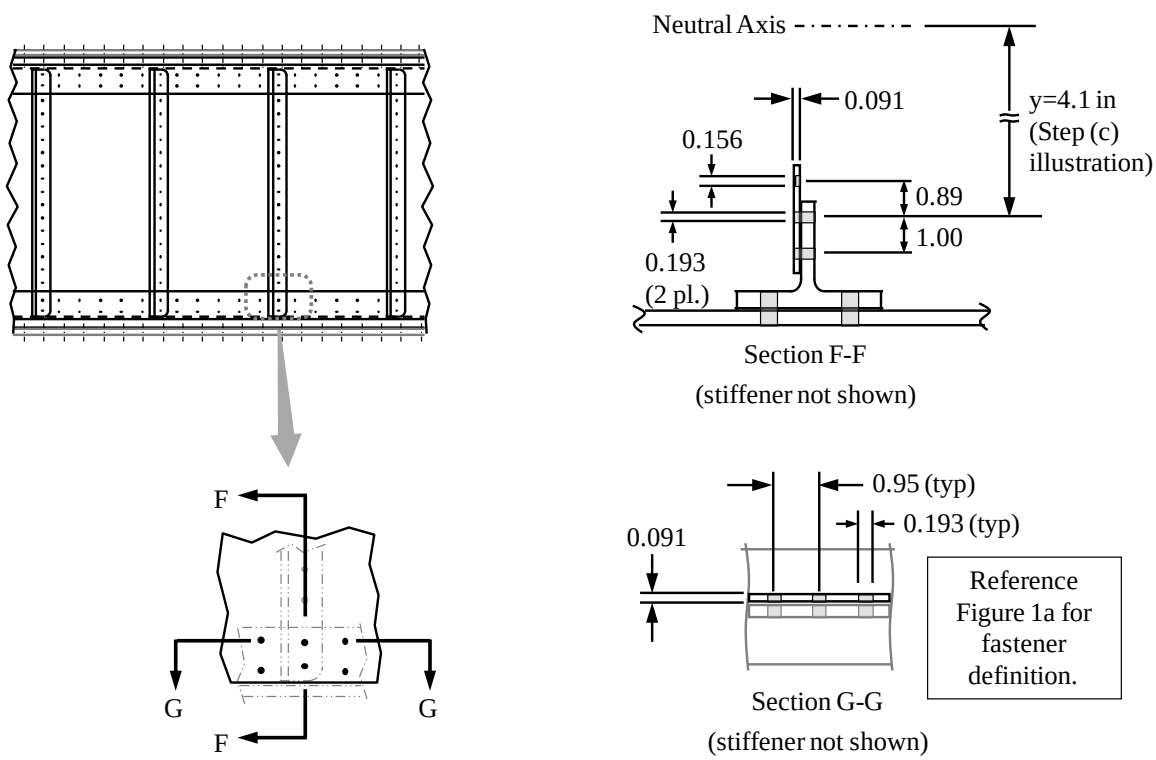

Section F-F:

Copyright 2016 Lockheed Martin Corporation.
Note: The current version is always the version on the Lockheed Martin network.

From Example 6.6.1.17, Step (i), the net section reduction factor, η, through Section F-F is:

$\eta = 0.796$

The web average shear stress from Step (b) is:

$f_{s,av} = 19{,}209$ psi

The net shear stress is:

$$f_{s,net} = \frac{f_s}{\eta} = \frac{19{,}209\ psi}{0.796} = 24{,}132\ psi$$

The web allowable shear stress is:

F_{su} = 47,520 psi, at 160° F (7075-T6 sheet, Example 6.6.1.17, Table 1c)

The web shear stress ratio is:

$$R_s = \frac{f_{s,net}}{F_{su}} = \frac{24{,}132\ psi}{47{,}520\ psi} = 0.508$$

The cap axial load resulting from the beam bending moment is:

$M = 500{,}000\ in\text{-}lb$, from Example 6.6.1.17, Step (f)

$h_e = 11.442\ in$, from Example 6.6.1.17, Step (c)

$$P_{cap} = \frac{M}{h_e} = \frac{500{,}000\ in\text{-}lb}{11.442\ in} = 43{,}699\ lb \quad \text{(Equation 6.6-1)}$$

The cap axial stress due to bending is:

$A_{cap} = 2.062\ in^2$, from Example 6.6.1.17, Step (b)

$$f_{a,net} = \frac{P_{cap}}{A_{cap}} = \frac{43{,}699\ lb}{2.062\ in^2} = 21{,}193\ psi$$

Note that the cap area of 2.062 in^2 is net, so no additional reduction is necessary.

The web allowable axial stress is:

F_{tu} = 75,200 psi, at 160° F (7075-T6 sheet, Example 6.6.1.17, Table 1c)

The web axial stress ratio is:

$$R_a = \frac{f_{a,net}}{F_{tu}} = \frac{21{,}193\ psi}{75{,}200\ psi} = 0.282$$

The strength margin of safety for the web at Section F-F is written using Equation 6.6.1-1:

$$MS_{ult} = \frac{1}{\sqrt{{R_a}^2 + {R_s}^2}} - 1 = \frac{1}{\sqrt{(0.282)^2 + (0.508)^2}} - 1 = +0.72$$

By inspection, the Limit check is not critical.

<u>Section G-G</u>:

From Example 6.6.1.17, Step (i), the net section reduction factor, η, through Section F-F is:

$\eta = 0.797$

Copyright 2016 Lockheed Martin Corporation.
Note: The current version is always the version on the Lockheed Martin network.

The check at this location is made using the shear stress only. The gross shear stress at the upper fastener row is the same as that calculated at Section F-F, Step (f):

$f_{s,av} = 19{,}209$ psi

The net shear stress is:

$$f_{s,net} = \frac{f_s}{\eta} = \frac{19{,}209\ psi}{0.797} = 24{,}102\ psi$$

The web allowable shear stress is:

F_{su} = 47,520 psi, at 160° F (7075-T6 sheet, Example 6.6.1.17, Table 1c)

The web strength margin of safety at Section G-G is calculated using Equation 6.5.1-2:

$$MS_{ult} = \frac{F_{su}}{f_{s,net}} - 1 = \frac{47{,}520\ psi}{24{,}102\ psi} - 1 = +0.97$$

By inspection, the Limit check is not critical.

g) Determine the net-section strength margins of safety for the lower cap skin:
(Note that this analysis step corresponds to Item 3 in Table 6.6.1-1.)

From Step (f), the net axial stress in the lower cap is:

$f_{cap(net)} = 21{,}193\ psi$

The skin allowable axial stress is:

F_{tu} = 63,920 psi, at 160° F (7075-T7351 plate, Example 6.6.1.17, Table 1c)

The skin strength margin of safety at the beam OML is:

$$MS_{ult} = \frac{F_{tu}}{f_{cap(net)}} - 1 = \frac{63{,}920\ psi}{21{,}193\ psi} - 1 = +2.02$$

By inspection, the Limit check is not critical.

Copyright 2016 Lockheed Martin Corporation.
Note: The current version is always the version on the Lockheed Martin network.

h) Determine the net-section strength margins of safety for the lower tee:
(Note that this analysis step corresponds to Item 3 in Table 6.6.1-1.)

From Example 6.6.1.17, Step (m), the load transfer in the lower cap is as shown:

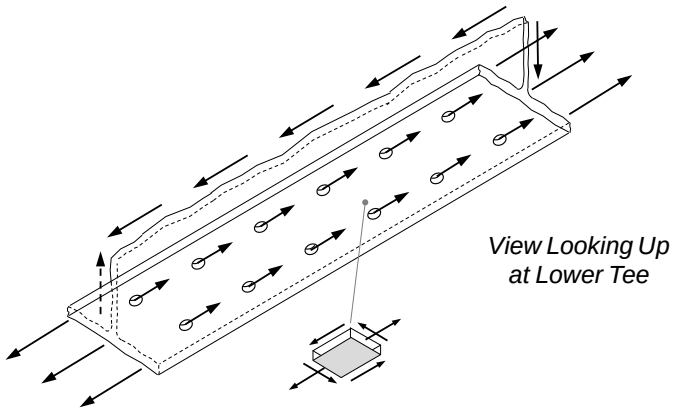

From Step (f), the net axial stress in the lower cap is:

$$f_{cap} = 21{,}193\ psi$$

The allowable axial stress for the tee is:

F_{tu} = 79,900 psi, at 160° F (7075-T651 extrusion, Example 6.6.1.17, Table 1c)

The axial stress ratio for the tee is:

$$R_a = \frac{f_{cap}}{F_{tu}} = \frac{21{,}193\ psi}{79{,}900\ psi} = 0.265$$

From Step (b), the web average shear flow is:

$$q = 1{,}748\ lb/in$$

The shear stress for the tee is:

$$f_{s,flg} = \frac{1{,}748\ lb/in}{0.25\ in} = 6{,}992 \text{ psi. Note that this is a gross stress.}$$

Using the net section reduction factor of 0.747 from Example 6.6.1.17, Step (k), Location 1, the net flange shear stress is:

$$f_{s,net} = \frac{f_s}{\eta} = \frac{6{,}992\ psi}{0.747} = 9{,}360\ psi$$

The allowable shear stress for the tee is:

F_{su} = 44,550 psi, at 160° F (7075-T6 sheet, Example 6.6.1.17, Table 1c)

The shear stress ratio for the tee is:

$$R_s = \frac{f_s}{F_{su}} = \frac{9{,}360\ psi}{44{,}550\ psi} = 0.210$$

The strength margin of safety for the tee is written using Equation 6.6.1-1:

Copyright 2016 Lockheed Martin Corporation.
Note: The current version is always the version on the Lockheed Martin network.

$$MS_{ult} = \frac{1}{\sqrt{{R_a}^2 + {R_s}^2}} - 1 = \frac{1}{\sqrt{(0.265)^2 + (0.210)^2}} - 1 = +1.96$$

By inspection, the Limit check is not critical.
Location 2, Shear at flange-cap intersection
q=1748 #/in

$$f_s = \frac{q}{t_{tee}} = \frac{1748\ \#/in}{0.20\ in} = 8{,}740\ psi$$

$$R_s = \frac{f_s}{F_{su}} = \frac{8{,}740\ psi}{44{,}550\ psi} = 0.196$$

The strength margin of safety for the tee-cap intersection is written as

$$MS_{ult} = \frac{1}{\sqrt{{R_a}^2 + {R_s}^2}} - 1 = \frac{1}{\sqrt{(0.265)^2 + (0.196)^2}} - 1 = +2.03$$

This is less critical than the net shear through the fastener row.

i) Determine the crippling margin of safety for the upper cap tee:
(Note that this analysis step corresponds to Item 4 in Table 6.6.1-1.)

From Step (f), the cap axial load resulting from the 500,000 in-lb bending moment is:

$$P_{cap} = 43{,}699\ lb$$

And the net cap area A_{net}=2.062 in^2. The axial stress is

$$f_a = \frac{P_{cap}}{A_{net}} = \frac{43{,}699\ lb}{2.062\ in} = 21{,}193\ psi$$

The load acting in the tee alone is determined by the stress times the tee gross area:

$$A_{tee,gross} = 1.030\ in^2$$

$$P_{tee} = f_a A_{tee,gross} = 21{,}193\ psi(1.030\ in^2) = 21{,}829\ lb$$

The allowable crippling load for the tee from Example 6.6.1.17, Step (l) is:

$$P_{cc} = F_{cc} A_{tee} = 64{,}767\ lb \quad \text{(Equation 8.4.0-2)}$$

The crippling margin of safety for the tee is:

$$MS_{ult} = \frac{P_{cc}}{P_{tee}} - 1 = \frac{64{,}767\ lb}{21{,}829\ lb} - 1 = +1.97 \quad \text{(Equation 8.4.0-3)}$$

Note that since the tee flanges are attached to the skin and web, initial buckling checks for the individual flanges are not required.

Copyright 2016 Lockheed Martin Corporation.
Note: The current version is always the version on the Lockheed Martin network.

j) Determine the inter-rivet buckling margins of safety for the upper cap skin and web:
(Note that this analysis step corresponds to Item 6 in Table 6.6.1-1.)

The axial compression stress in the upper cap is of the same magnitude as the lower cap tension stress from Step (f):

$$f_{cap} = 21{,}193\ psi\ (compression)$$

Skin:

The fastener pitch is: s = 1.00 in, from Example 6.6.1.17, Figure 1a.

From Example 6.6.1.17, Step (a), the skin inter-rivet buckling stress is:

$$F_{ir(160°\mathrm{F})} = 54.91\ ksi$$

The skin inter-rivet buckling margin of safety is calculated using Equation 8.6.1-9:

$$MS_{ult} = \frac{F_{ir(160°\mathrm{F})}}{f_{skin}} - 1 = \frac{54{,}910\ psi}{21{,}193\ psi} - 1 = +1.59$$

Web:

From Example 6.6.1.17, Step (a), the web inter-rivet buckling stress is:

$$F_{ir(160°\mathrm{F})} = 66.98\ ksi$$

The web inter-rivet buckling margin of safety is calculated using Equation 8.6.1-9:

$$MS_{ult} = \frac{F_{ir(160°\mathrm{F})}}{f_{web}} - 1 = \frac{66{,}980\ psi}{21{,}193\ psi} - 1 = +2.16$$

k) The required minimum inertia check is unchanged from Example 6.6.1.17, Step (n).
(Note that this analysis step corresponds to Item 10 in Table 6.6.1-1.)

l) Determine the margins of safety for the web-to tee joint:
(Note that this analysis step corresponds to Item 11 in Table 6.6.1-1.)

The shear flow at the web-to-tee attachment is the average for the panel, from Step (b):

$$q = 1{,}748\ lb/in$$

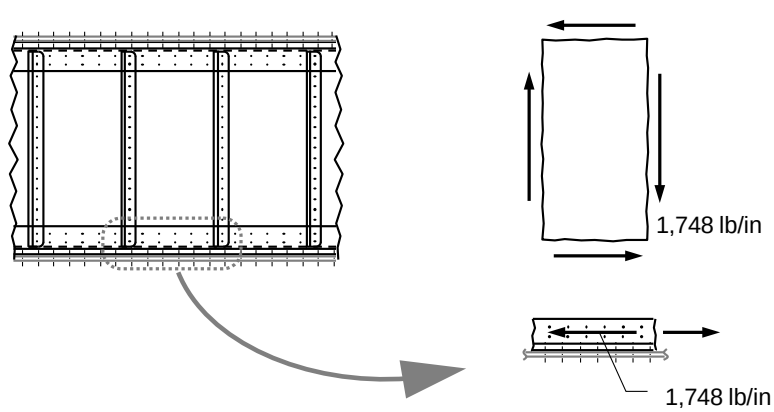

The fastener load using the 0.95 in pitch (Example 6.6.1.17, Figure 1a) is:

Copyright 2016 Lockheed Martin Corporation.
Note: The current version is always the version on the Lockheed Martin network.

$$P = \frac{q(pitch)}{2\ rows} = \frac{1{,}748\ lb/in\ (0.95\ in)}{2\ rows} = 830\ lb$$

Reference Example 6.6.1.17, Step (o), the allowable fastener load for the HL18-6 in the 0.091 in web is calculated using Equation 5.2.3-3:

$P_{bru} = k_{wpb}\ F_{bru} d\ t = 0.82$(146,400 psi)(0.190 in)(0.091 in) = 2,076 lb, which is less than the fastener shear allowable of 2,667 lb.

The web bearing margin of safety at the web-to-tee joint is calculated using Equation 5.2.3-7:

$$MS_{ult} = \frac{P_{bru}}{P} - 1 = \frac{2{,}076\ lb}{830\ lb} - 1 = +1.50$$

Note that $\frac{F_{bry}}{F_{bru}} = 0.81$; the Limit load check is less critical than Ultimate.

m) Determine the margins of safety for the skin-to-tee joint:

(Note that this analysis step corresponds to Item 12 in Table 6.6.1-1.)

The shear flow at the skin-to-tee attachment is the average for the panel, from Step (b):

$q = 1{,}748\ lb/in$

The fastener load using the 1.00 in pitch (Example 6.6.1.17, Figure 1a) is:

$$P = \frac{q(pitch)}{2\ rows} = \frac{1{,}748\ lb/in\ (1.00\ in)}{2\ rows} = 874\ lb$$

Reference Example 6.6.1.17, Step (p), the allowable fastener load for the HL21-8 in the 0.225 in skin is calculated using Equation 5.2.3-3:

$P_{bru} = k_{wpb}\ F_{bru} d\ t = 0.82$(119,870 psi)(0.250 in)(0.225 in) = 5,529 lb, which is greater than the fastener shear allowable of 4,613 lb.

The fastener shear margin of safety for the skin-to-tee joint is calculated using Equation 5.2.3-8:

$$MS_{ult} = \frac{P_{shr}}{P} - 1 = \frac{4{,}613\ lb}{874\ lb} - 1 = +4.28$$

By inspection, the Limit check is not critical.

n) The margins of safety for the stiffener termination joint are unchanged from Example 6.6.1.17, Step (q) and are not critical.

(Note that this analysis step corresponds to Item 13 in Table 6.6.1-1.)

Copyright 2016 Lockheed Martin Corporation.
Note: The current version is always the version on the Lockheed Martin network.

The Margins of Safety for the approximate solution are summarized as shown:

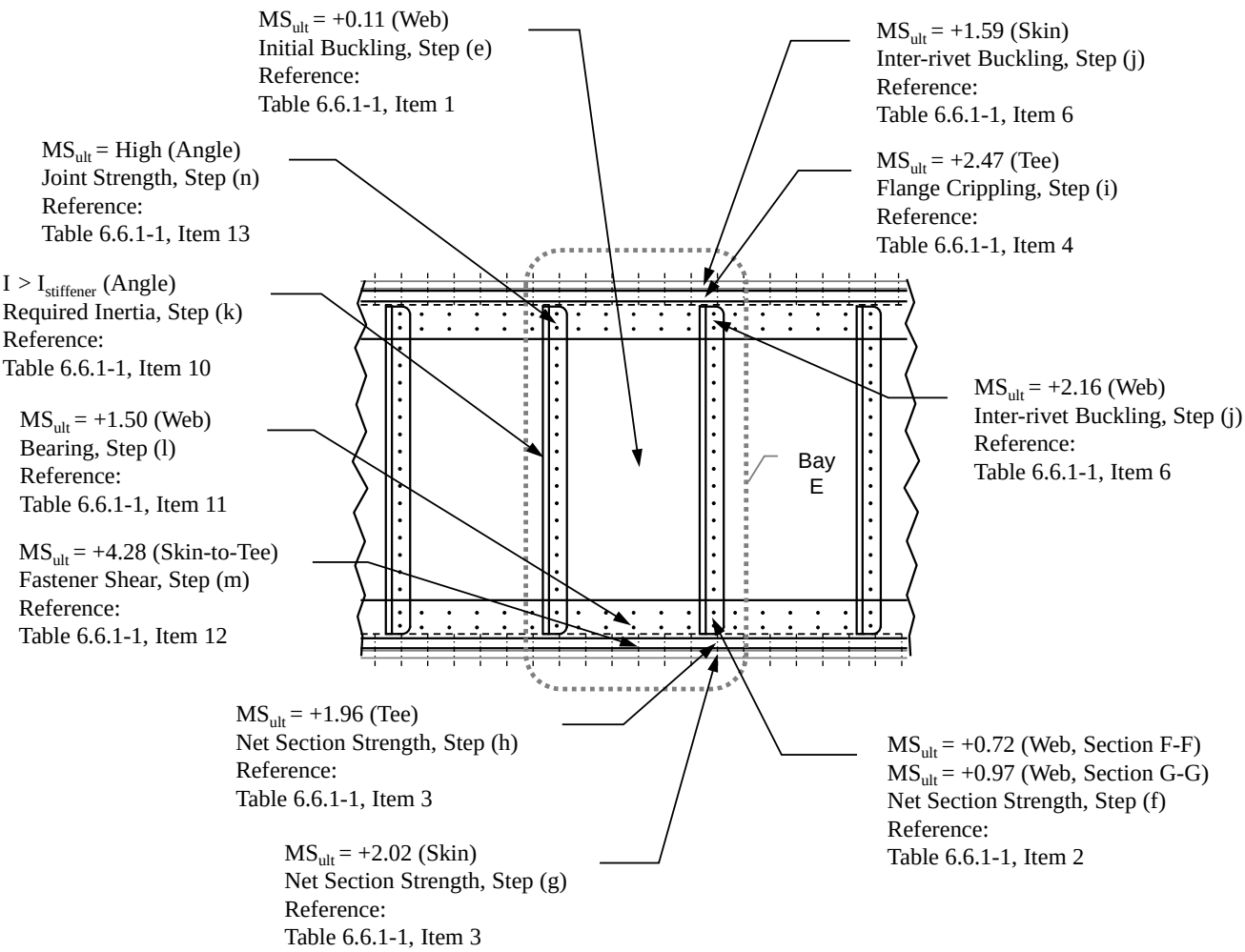

Note that the Margins of Safety are shown as calculated numerically, even where they are high (usually greater than +1.00 or +2.00). Refer to program policy regarding the reporting of high margins.

Copyright 2016 Lockheed Martin Corporation.
Note: The current version is always the version on the Lockheed Martin network.

A comparison of Margins of Safety for the exact and approximate solutions is as shown:
Reference Examples 6.6.1.17 and 6.6.1.18, respectively, for the exact and approximate solutions.

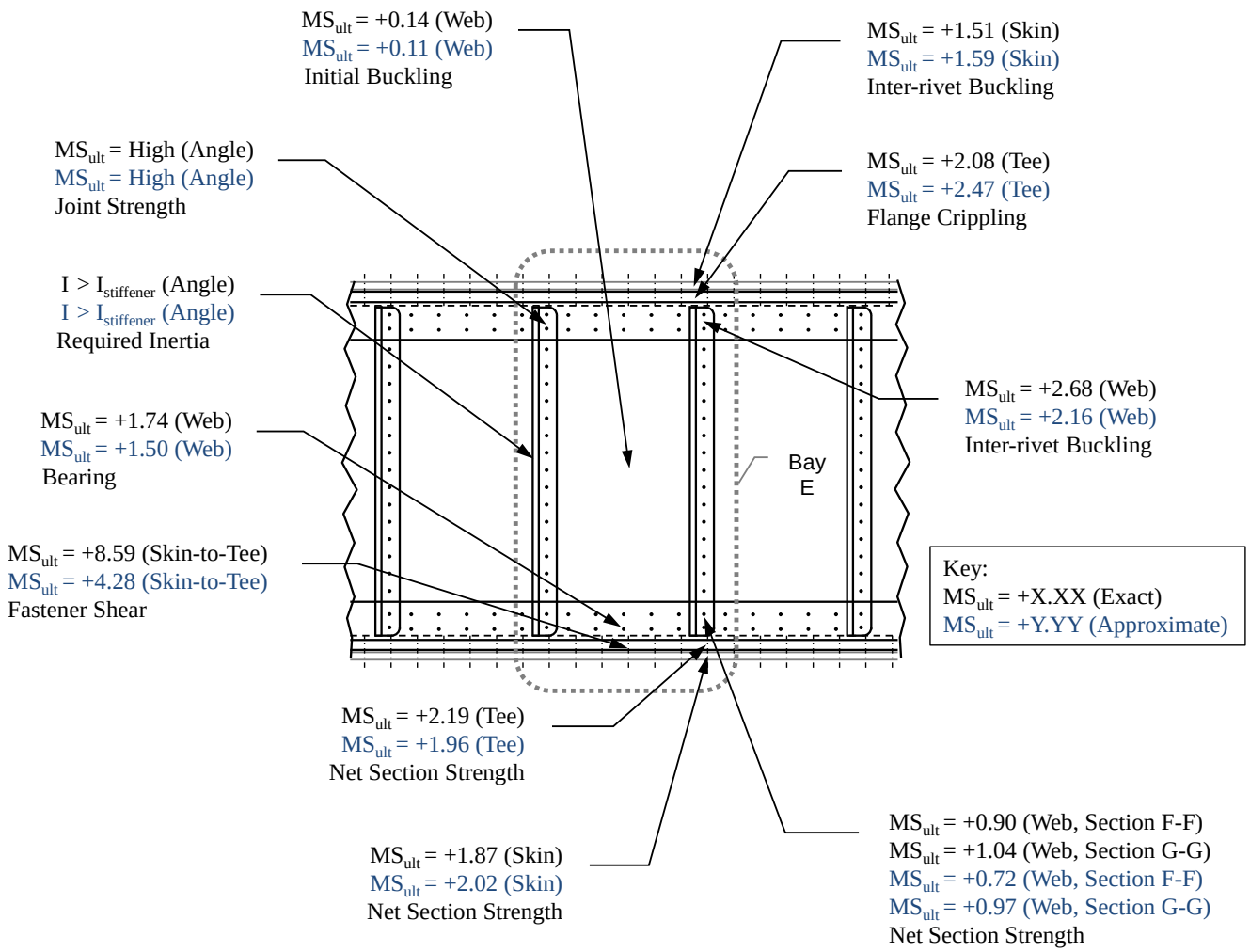

Note that the Margins of Safety are shown as calculated numerically, even where they are high (usually greater than +1.00 or +2.00). Refer to program policy regarding the reporting of high margins.

For the beam in Examples 6.6.1.17 and 6.6.1.18, the approximate solution is preferable due to its simplicity. The difference in the critical margin (web buckling) using the two solutions is three percent. For most deep beams with thin webs, the strength analysis using the approximate solution is usually sufficient; for shallow beams with thicker webs, the exact solution is advised. Section 6.6 discusses this topic in greater detail.

Copyright 2016 Lockheed Martin Corporation.
Note: The current version is always the version on the Lockheed Martin network.

6.6.2 Diagonal Tension Beams

Diagonal tension beam design should be used wherever possible to reduce weight. From Equation 6.6-2, if the ratio of shear flow to beam height (q/h_e) is less than 49, diagonal tension design will usually result in the minimum weight beam configuration.

The webs of diagonal tension beams buckle below Ultimate load, so there are additional forces in the beam caps, stiffeners and attachments, when compared with shear resistant beams. A comparison of web stresses in shear resistant and pure diagonal tension beams illustrates this point. Consider a beam with all bending resistance in the caps; web stresses for the shear resistant case are shown in Figure 6.6.2-1:

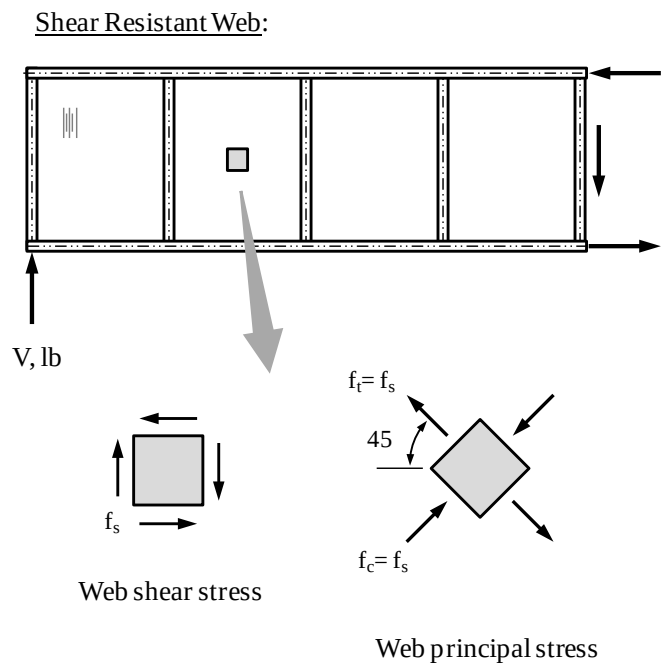

Figure 6.6.2-1: Stresses Acting on a Shear Resistant Beam Web

From Figure 6.6.2-1, it can be shown using Mohr's Circle that:

$$f_s = f_t = f_c$$

Thus, for the shear resistant beam, there are no axial forces acting on the web in addition to shear. The only load transfer to caps and stiffeners is in the form of shear flow (q).

Web stresses for the pure diagonal tension case are shown in Figure 6.6.2-2. In this case, the web has no compression resistance; the web axial load may be idealized as carried by a series of parallel wires.

Copyright 2016 Lockheed Martin Corporation.
Note: The current version is always the version on the Lockheed Martin network.

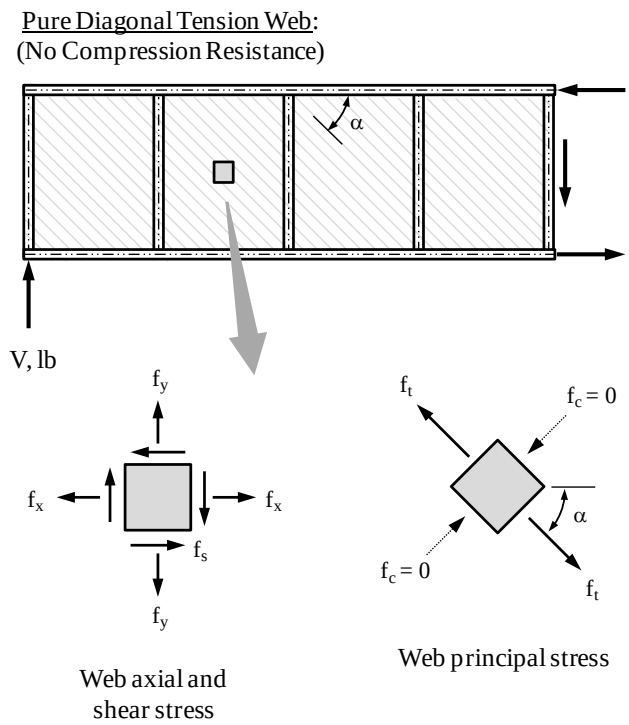

Figure 6.6.2-2: Stresses Acting on the Web of a Pure Diagonal Tension Beam

Mohr's Circle may be used to resolve the components of web stress into those given by Equation 6.6.2-1:

$$f_x = \frac{f_s}{\tan\alpha} = f_s \cot\alpha$$

$$f_y = f_s \tan\alpha \qquad \textbf{Equation 6.6.2-1}$$

$$f_t = \frac{f_s}{\sin\alpha\cos\alpha} = \frac{2f_s}{\sin 2\alpha}$$

Note that where the attaching flanges and stiffeners have the same axial stiffness[1], α = 45° and the web stress components from Equation 6.6.2-1 reduce to those given by Equation 6.6.2-2:

$$f_x = f_s$$

$$f_y = f_s \qquad \textbf{Equation 6.6.2-2}$$

$$f_t = 2f_s$$

Thus, for the diagonal tension beam, there are axial forces acting on the web in addition to shear. These loads must be reacted by the flanges and stiffeners as shown in Figures 6.6.2-3 and 6.6.2-4. The bending moments shown represent full moment fixity at the flange / stiffener intersections, which is an approximation in most cases.

[1] In this case, f_x and f_y are resisted equally by compression loading in the the flanges and stiffeners. In most practical beams, the flanges have greater stiffness than the stiffeners and α ≠ 45°. Further discussion on this topic is presented in Reference 6-28.

Copyright 2016 Lockheed Martin Corporation.
Note: The current version is always the version on the Lockheed Martin network.

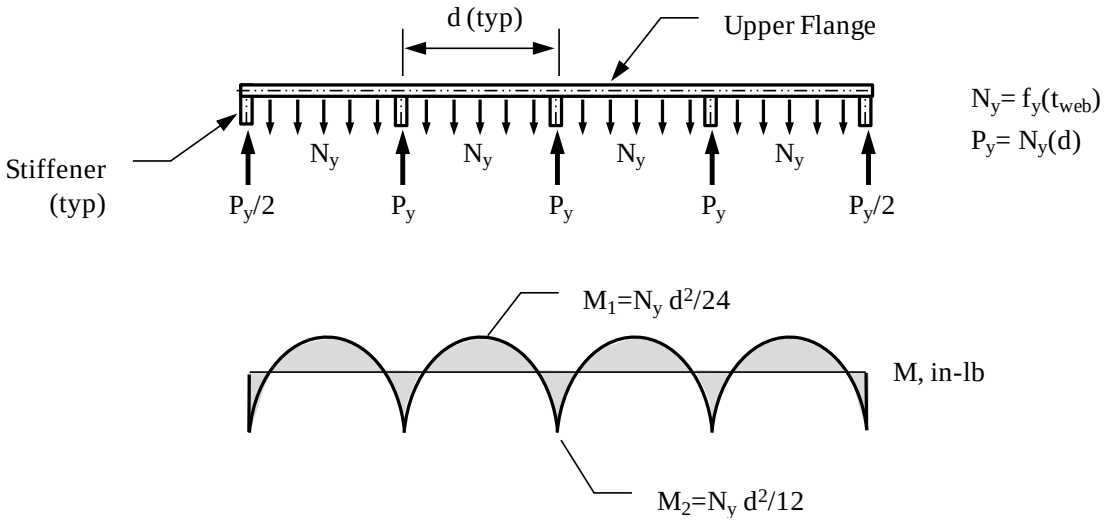

Figure 6.6.2-3: Bending Moments Acting on the Flange of a Pure Diagonal Tension Beam

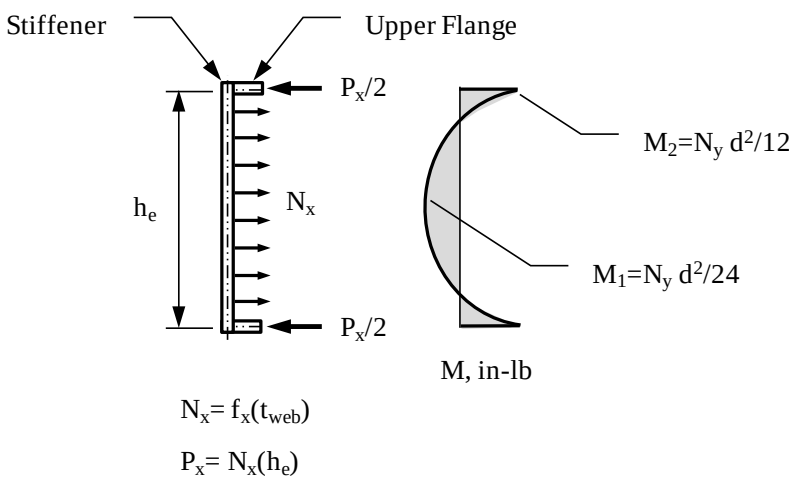

Figure 6.6.2-4: Bending Moments Acting on the Closeout Stiffener of a Pure Diagonal Tension Beam

End Bay Effects: The free body diagram for the closeout stiffener in Figure 6.6.2-4 illustrates why end bays are usually designed with shear-resistant webs. If the end bays remain unbuckled, there are no secondary loads and bending moments acting on the closeout stiffeners. Common options for reinforcement are shown in Figure 6.6.2-5:

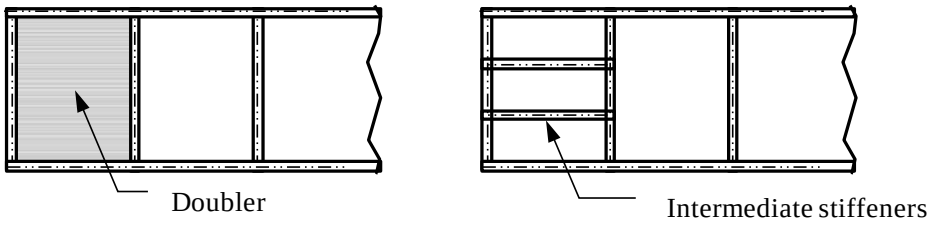

Figure 6.6.2-5: Common End Bay Reinforcement in a Diagonal Tension Beam

Copyright 2016 Lockheed Martin Corporation.
Note: The current version is always the version on the Lockheed Martin network.

Attachment Loads: In tension field beams, additional forces act at the web-to-flange and web-to-closeout stiffener attachments. For the pure tension field beam, these are as given in Equation 6.6.2-3(a) and 6.6.2-3(b) and shown in Figure 6.6.2-6.

Web-to-Flange Attachments: In addition to the basic shear flow, q, the attachments transfer the vertical component of the web axial load, N_y. The resultant of these two running loads is given by Equation 6.6.2-3(a):

$$q_{flg} = \sqrt{q^2 + {N_y}^2} = \sqrt{q^2 + q^2 tan^2\alpha} = q\sqrt{1 + tan^2\alpha}$$

$$q_{flg} = q \sec\alpha$$

Equation 6.6.2-3(a)

Note that α is assumed to be 45° for the pure diagonal tension web

Web-to-Closeout Stiffener Attachments: In addition to the basic shear flow, q, the attachments transfer the horizontal component of the web axial load, N_x. The resultant of these two running loads is given by Equation 6.6.2-3(b):

$$q_{stiff} = \sqrt{q^2 + {N_x}^2} = \sqrt{q^2 + q^2 cot^2\alpha} = q\sqrt{1 + cot^2\alpha}$$

$$q_{stiff} = q \csc\alpha$$

Equation 6.6.2-3(b)

Note that α is assumed to be 45° for the pure diagonal tension web

Note that the load transfer between the web and intermediate stiffeners is negligible.

Web-to-Flange Attachments

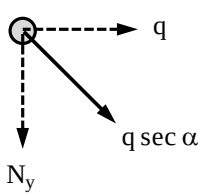

Web-to-Closeout Stiffener Attachments

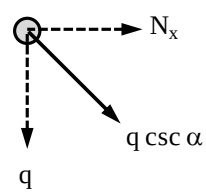

Figure 6.6.2-6: Attachment Loads for a Pure Diagonal Tension Beam

Copyright 2016 Lockheed Martin Corporation.
Note: The current version is always the version on the Lockheed Martin network.

6.6.2.1 Example Calculation – Internal Load Calculations for a Pure Diagonal Tension Beam

Given:

The beam shown is assumed to have a pure tension field web (α = 45°). Draw the free body diagrams for the stiffeners and flanges. Determine the resultant fastener loads acting at the closeout stiffener and flange attachments. Note that h_e is the distance between cap centroids.

Assume:

1. All beam bending moments are reacted as cap axial forces
2. The flanges and stiffeners have the same axial stiffness

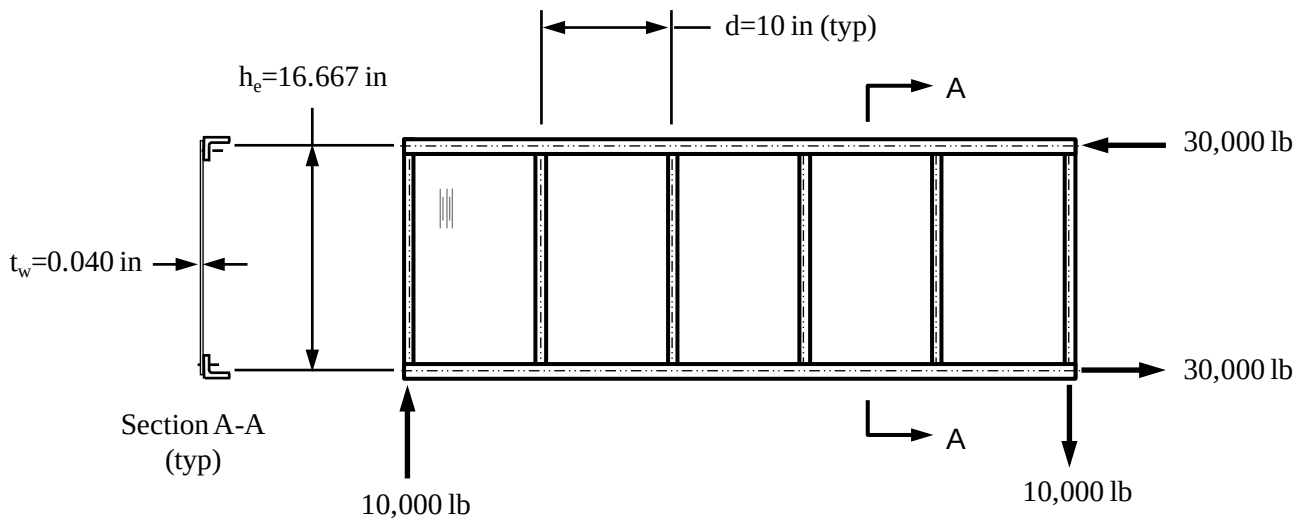

Solution Step:

a) Determine the average shear stress acting on the web for the shear load: V = 10,000 lb

Using Equation 6.5.5-1, the shear flow is:

$$q = \frac{V}{h_e} = \frac{10{,}000\ lb}{16.667\ in} = 600\ lb/in$$

$$f_s = \frac{600\ lb/in}{0.040\ in} = 15{,}000 \text{ psi}$$

Using Equation 6.6.2-2, for α = 45°:

$$f_x = f_y = f_s = 15{,}000 \text{ psi}$$

Copyright 2016 Lockheed Martin Corporation.
Note: The current version is always the version on the Lockheed Martin network.

b) Determine the loads acting normal to the stiffeners:

The running loads acting normal to the closeout stiffeners are:

$N_x = f_x(t_{web}) = q_{av} = 600\ lb/in$

The reactions to the closeout stiffener running loads are:

$P_x = N_x \frac{h_e}{2} = 600\ \text{lb}\left(\frac{16.667\ in}{2}\right) = 5{,}000\ lb$, acting in compression at the upper and lower flange attachments.

The normal loads acting on the closeout stiffeners are as shown:

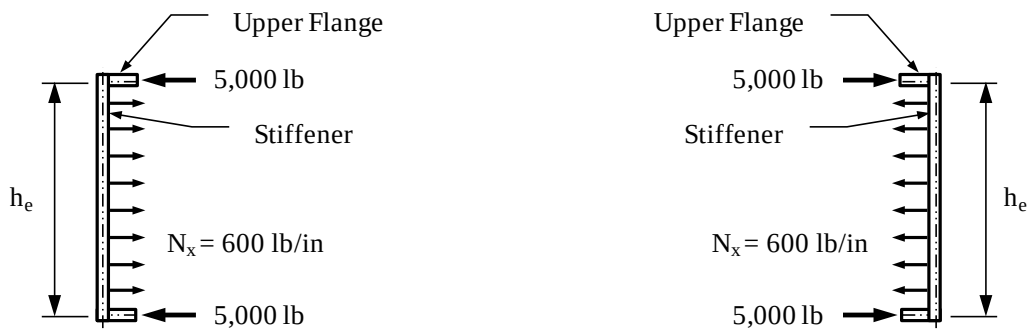

The intermediate stiffeners experience no net normal load since the running load acts equally on both sides of the stiffener, as shown:

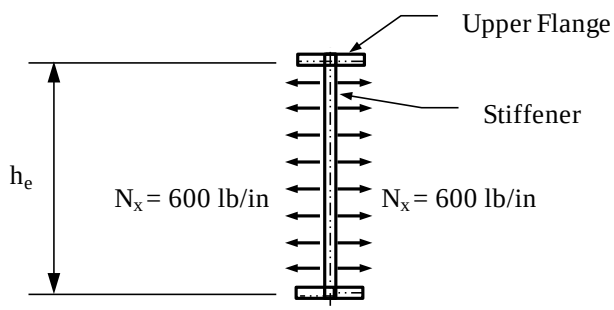

c) Determine the loads acting normal to the flanges:

The running loads acting normal to the flanges are:

$N_y = f_y(t_{web}) = q_{av} = 600\ lb/in$

The reactions to the flange running loads are:

$P_y = N_y \frac{d}{2} = 600\ \text{lb}\left(\frac{10.00\ in}{2}\right) = 3{,}000\ lb$, acting in compression at the closeout stiffener attachments.

$P_y = N_y\ d = 600\ \text{lb}\ (10.00\ in) = 6{,}000\ lb$, acting in compression at the intermediate stiffener attachments.

The normal loads acting on the flanges are as shown:

Copyright 2016 Lockheed Martin Corporation.
Note: The current version is always the version on the Lockheed Martin network.

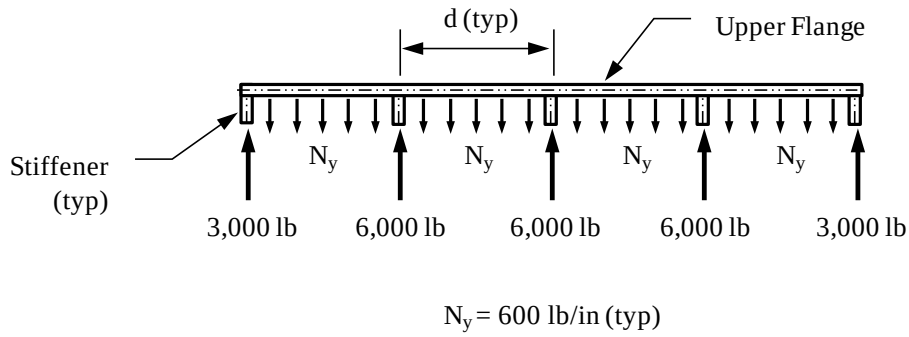

d) Combine the primary loads due to shear and bending from Step (a) with the secondary loads from Steps (b) and (c) to obtain the final internal load distribution:

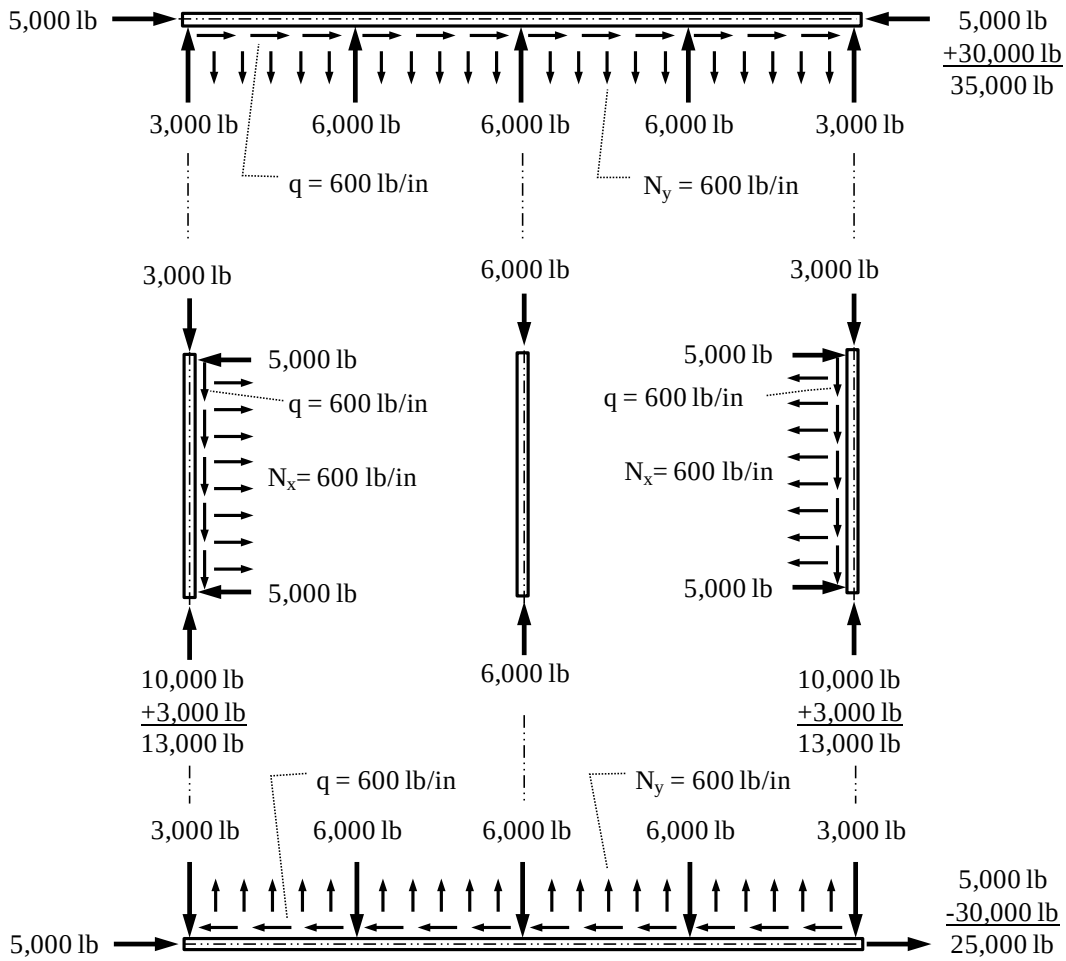

Notes:

1. The internal loads are identical for all intermediate stiffeners; for clarity, some are omitted from the free body diagram.
2. The flange and stiffener shear and bending moments are not shown; strength analysis would include these loads in addition to the axial loads shown.

Copyright 2016 Lockheed Martin Corporation.
Note: The current version is always the version on the Lockheed Martin network.

e) Determine the resultant fastener loads acting at the web-to-flange attachments using the loads from Step (d):

Using Equation 6.6.2-3(a):

$$q_{flg} = \sqrt{q^2 + {N_y}^2} = \sqrt{(600\ lb/in)^2 + (600\ lb/in)^2} = 849\ lb/in$$

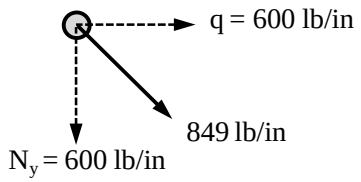

Alternatively, also using Equation 6.6.2-3(a):

$q_{stiff} = q \sec\alpha = 600\ lb/in\ (sec\ 45°) = 849\ lb/in$

f) Determine the resultant fastener loads acting at the web-to-closeout stiffener attachments using the loads from Step (d):

Using Equation 6.6.2-3(b):

$$q_{stiff} = \sqrt{q^2 + {N_x}^2} = \sqrt{(600\ lb/in)^2 + (600\ lb/in)^2} = 849\ lb/in$$

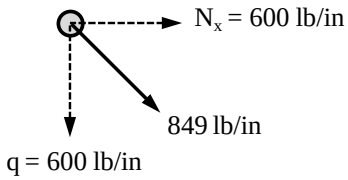

Alternatively, also using Equation 6.6.2-3(b):

$q_{stiff} = q \csc\alpha = 600\ lb/in\ (csc\ 45°) = 849\ lb/in$

Copyright 2016 Lockheed Martin Corporation.
Note: The current version is always the version on the Lockheed Martin network.

6.6.3 Intermediate Diagonal Tension Beams

In beam design, the assumption of a pure diagonal tension web results in secondary forces in the flanges and stiffeners that greatly exceed the actual values. While this conservatism may be acceptable in preliminary sizing, greater accuracy is required for final design. For this reason, the majority of practical post-buckled beam designs fall into the category of Intermediate Diagonal Tension (IDT) Beams, often referred to as Partial (or Semi-) Tension Field Beams. In the IDT beam, the web state of stress is between pure shear and pure diagonal tension. Strength analysis methods for IDT beams are based primarily on the extensive development work performed by the NACA in the 1940's and 1950's, presented here as Reference 6-33. It is important to note that, while the secondary forces for the Pure Tension Field beam in Section 6.6.2 are easily derived using statics, the methods presented in this section are empirically based. For this reason, caution must be used in applying the methods presented in this section to beams of different proportion or materials. The range of beam configurations for which the diagonal tension strength analysis should be considered valid is given in Table 6.6.3-1.

Table 6.6.3-1: Beam Configuration Range for Diagonal Tension Strength Analyses

Item	Description	Validity Range
$\frac{h}{t}$	$\frac{\text{Beam OML Height (in)}}{\text{Web Thickness (in)}}$	115 - 1000
$\frac{t_u}{t}$	$\frac{\text{Thickness of Stiffener Flange Attached to Web (in)}}{\text{Web Thickness (in)}}$	>0.60
$\frac{t_f}{t}$	$\frac{\text{Thickness of Cap Flange Attached to Web (in)}}{\text{Web Thickness (in)}}$	>1.0
$\frac{d_c}{h_c}$	$\frac{\text{Clear Upright Spacing (in)}}{\text{Clear Web Height (in)}}$	0.20 - 1.0
$\frac{t}{D_{fast}}$	$\frac{\text{Web Thickness (in)}}{\text{Diameter of Web-to-Stiffener Fasteners (in)}}$	>0.35[1]
$\frac{s_u}{D_{fast}}$	$\frac{\text{Spacing of Web-to-Upright Fasteners (in)}}{\text{Diameter of Web-to-Upright Fasteners (in)}}$	3.5-5.0
N_u	Tension Allowable of Web-to-Stiffener Attach Fasteners per Inch of Web (lb/in) Double Stiffener Single Stiffener	 $>0.15(F_{tu}^{web})(t_w)$ $>0.22(F_{tu}^{web})(t_w)$
ωd	Flange Flexibility Factor, defined by Equation 6.6.3-8	<2.5[2]

[1] Not applicable if threaded, protruding head fastener is used and tensile strength is acceptable by analysis, per Section 6.6.3.3.4.
[2] Applicable to built-up structure only. Reference Section 6.6.4 for integrally machined guidelines.

Copyright 2016 Lockheed Martin Corporation.
Note: The current version is always the version on the Lockheed Martin network.

The strength and stability analyses for a diagonal tension beam must include the checks listed in Table 6.6.3-2 and shown in Figure 6.6.3-1.

Table 6.6.3-2: Required Strength and Stability Analyses for a Diagonal Tension Beam

Item	Location	Description	Notes
1	Web	Diagonal tension factor limit Buckling ratio limit	Ratio-To-Requirement Ratio-To-Requirement[1]
2	Web	Strength at web-to-cap attachment line	Includes net-section effect. Allowable stress dependent upon attachment configuration.
3	Stiffener	Compression yield	
4	Stiffener	Column buckling	Uses effective slenderness ratio
5	Stiffener	Forced crippling	Not applicable for integrally machined parts
6	Stiffener	Required Inertia	Stiffener must meet minimum inertia requirements to stabilize panel edge
7	Stiffener/Web	Inter-rivet buckling at stiffener attachment	Not applicable for double-sided stiffeners
8	Stiffener	Beam-column strength	Only applicable if lateral pressure exists
9	Web-to-flange attachment	Joint shear strength	
10	Stiffener-to-flange attachment	Joint shear strength	Includes stiffener compression loads if applicable
11	Stiffener-to-web attachment	Joint shear strength	Not applicable for single-sided stiffeners.
12	Stiffener-to-web attachment	Joint pull-off strength	
13	Cap / Flange	Flange Compression Strength	
14	Cap / Flange	Flange Stability	
15	Cap / Flange	Flange Tension Strength	

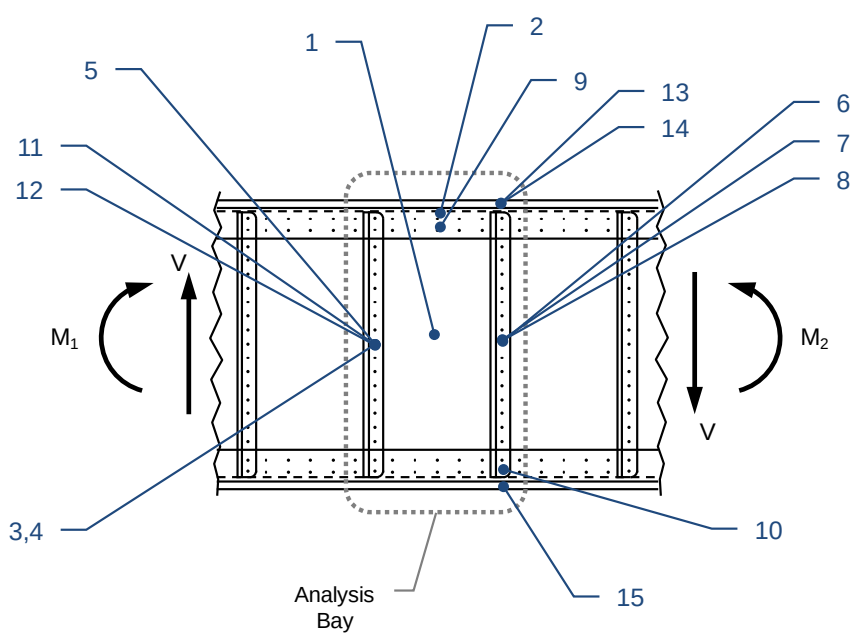

[1] Buckling ratio limit applies only to fatigue/stiffness critical structure.

Copyright 2016 Lockheed Martin Corporation.
Note: The current version is always the version on the Lockheed Martin network.

Figure 6.6.3-1: Required Strength and Stability Analysis Locations for a Diagonal Tension Beam

The list of symbols used in the diagonal tension analysis is shown in Table 6.6.3-3.

Table 6.6.3-3: Diagonal Tension Analysis - List of Symbols

(Greek symbols follow the Roman symbols)

Symbol	Description
A_{cap}	Beam cap cross-sectional area, in^2
A_u	Stiffener cross-sectional area (excluding web), in^2
$A_{u,e}$	Effective stiffener area, in^2
b	Length of stiffener outstanding leg, in
B	Total width of flange or stiffener, in
C_1	Stress concentration factor for web shear stress
C_2	Stress concentration factor for web shear stress
C_3	Stress concentration factor for cap bending stress
d	Stiffener spacing, in
d_c	Clear stiffener spacing, in
d_h	Fastener head diameter, in
D_{fast}	Fastener diameter, in
e	Distance from web mid-plane to centroid of single-sided stiffener, in
E	Elastic modulus, psi
F_b	Web bending stress, psi
$f_{a,sec}$	Flange secondary axial compression stress, psi
f_s	Web shear stress, psi
$f_{s,max}$	Maximum web shear stress, psi
$F_{o,e}$	Elastic stiffener forced crippling stress, psi
$F_{cr,el}$	Elastic web buckling stress, psi
F_{cr}	Web buckling stress, psi
f_u	Stiffener stress due to diagonal tension effects, psi
$f_{u,max}$	Maximum stiffener stress due to diagonal tension effects, psi
$f_{u,r}$	Stiffener stress due to beam curvature, psi
F_{all}	Allowable web shear stress including fastener and material correction, psi
F^*_{all}	Basic allowable web shear stress, psi
FF	Fastener type correction to web allowable strength
G	Shear modulus, psi
h	Beam Outer Mold Line (OML) height, in
h_c	Clear web height, in
h_e	Beam effective height, measured between cap centroids, in
h_r	Beam height measured between web-to-flange fastener rows, in
h_u	Stiffener height measured between stiffener-to-flange fastener rows, in
h_w	True web height, in
I_C	Compression cap moment of inertia, in^4
I_{cap}	Beam cap (flange) moment of inertia cap about its neutral axis, in^4
IDT	Intermediate Diagonal Tension
I_{PB}	Post-buckled beam moment of inertia, in^4
I_{SR}	Shear resistant beam moment of inertia, in^4
$I_{stiffener}$	Required moment of inertia for the stiffener, in^4
I_T	Tension cap moment of inertia, in^4
I_u	Stiffener moment of inertia, in^4
k	Diagonal tension factor
k_{all}	Maximum allowable diagonal tension factor
k_{ss}	Web buckling coefficient, simply supported edges

Copyright 2016 Lockheed Martin Corporation.
Note: The current version is always the version on the Lockheed Martin network.

L_e	Stiffener effective column length, in
M	Beam bending moment, in-lb
M_{pr}	Beam primary bending moment, in-lb
M_{sec}	Beam flange secondary bending moment, in-lb
M^{fillet}	Flange bending moment at machined fillet, in-lb
MF	Material type correction to web allowable strength
N_u	Required web pull-off strength at stiffener attachments, lb/in
P_{sec}	Flange secondary axial compression load, lb
P_{pt}	Web pull-through strength, lb
P_u	Stiffener compression load due to diagonal tension effects, lb
PB	Post-Buckled
Q	Static moment of one stiffener about web mid-plane, in^3
q	Web shear flow, lb/in
q_{cr}	Web buckling shear flow, lb/in
q_r	Web-to-flange resultant shear flow, lb/in
R	Web buckling Ratio
R_d	Web restraint coefficient along cap edge
R_h	Web restraint coefficient along stiffener edge
RTR	Ratio-To-Requirement
s_u	Stiffener fastener spacing, in
SR	Shear Resistant
t	Web thickness, in
t_f	Cap thickness – attached flange, in
$t_{f,o}$	Cap thickness – outstanding flange, in
t_u	Stiffener thickness – attached flange, in
$t_{u,o}$	Stiffener thickness – outstanding flange, in
V	Beam applied shear load, lb
w	Beam compressive running load due to curvature, lb/in
W	Stiffener compressive load due to curvature, lb
α	Diagonal tension angle, degrees
α_{PDT}	Pure diagonal tension angle, degrees
ρ	Beam radius of curvature, in
ρ_u	Stiffener radius of gyration, in
ωd	Flange flexibility factor, Equation 6.6.3-8

The required beam dimensions for the diagonal tension analysis are shown in Figure 6.6.3-2.

Copyright 2016 Lockheed Martin Corporation.
Note: The current version is always the version on the Lockheed Martin network.

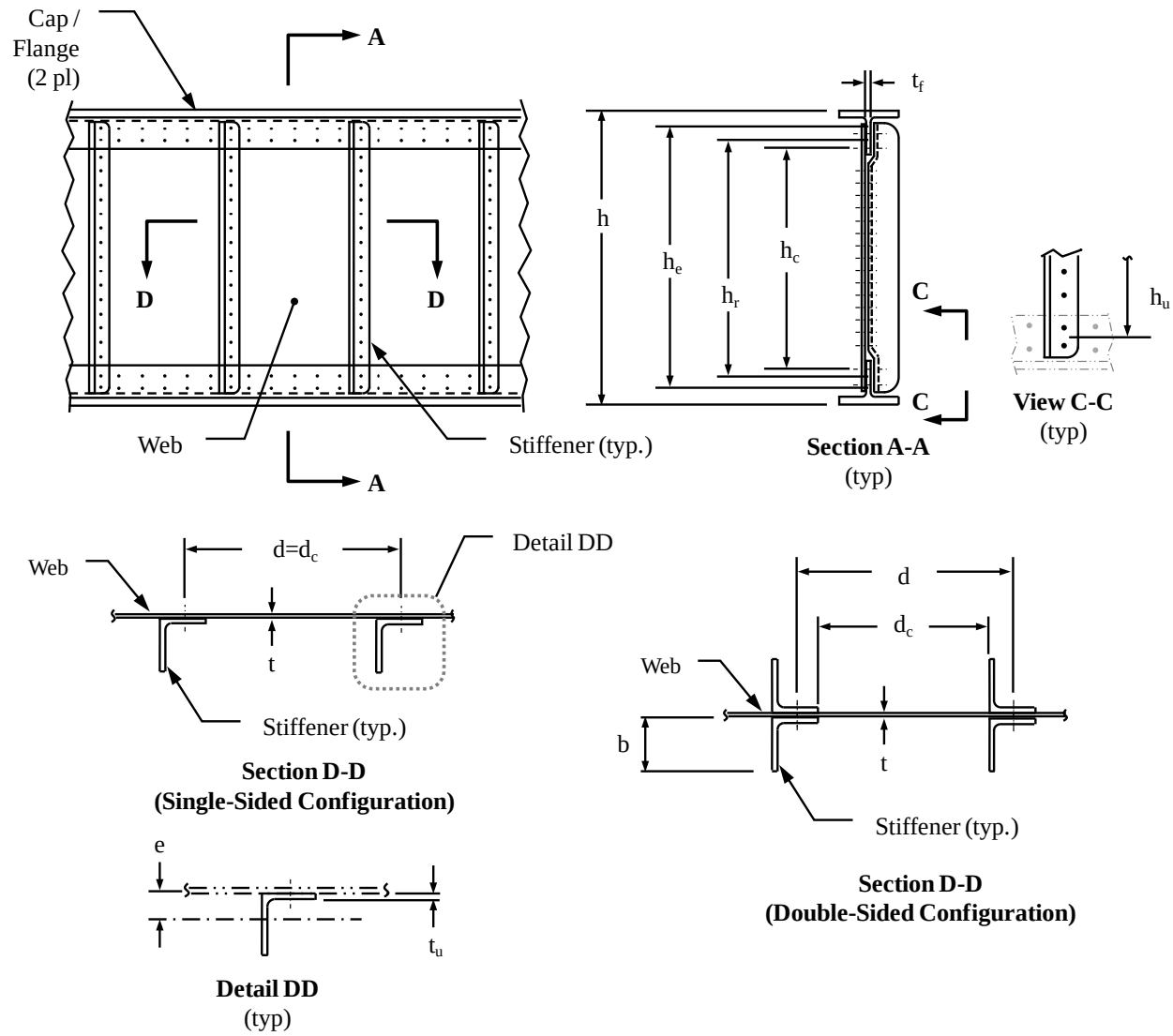

Figure 6.6.3-2: Diagonal Tension Analysis – Reference Dimensions

The engineering theory in Reference 6-33 assumes that, in an IDT beam, a portion of the applied shear load is carried by pure shear and a portion is carried by pure diagonal tension. The total state of web shear stress may thus be written as:

$$f_S = f_{PS} + f_{PDT}$$

Where:

$$f_S = total\ web\ shear\ stress$$
$$f_{PS} = portion\ carried\ by\ pure\ shear = (1-k)f_S$$
$$f_{PDT} = portion\ carried\ by\ pure\ diagonal\ tension = kf_S$$

The diagonal tension factor, k, represents the degree to which diagonal tension is developed by the applied shear load and is thus dependent upon of the level of post-buckling. The diagonal tension factor ranges from 0.0 for an unbuckled web to 1.0 for the pure diagonal tension web and is described in Section 6.6.3.1.2. The intermediate diagonal tension angle, α, has a maximum value of 45° and is described in Section 6.6.3.1.3.

Copyright 2016 Lockheed Martin Corporation.
Note: The current version is always the version on the Lockheed Martin network.

As shown in Figure 6.6.3-3, the web state of stress in an IDT beam is obtained through superposition of the pure shear and pure diagonal tension cases. Thus, a portion of the externally applied shear load is carried as a shear resistant beam and the remainder as a pure diagonal tension beam. When resolved to the diagonal tension angle, α, the IDT web is loaded in tension and compression. The web tension component is greater than the compression component.

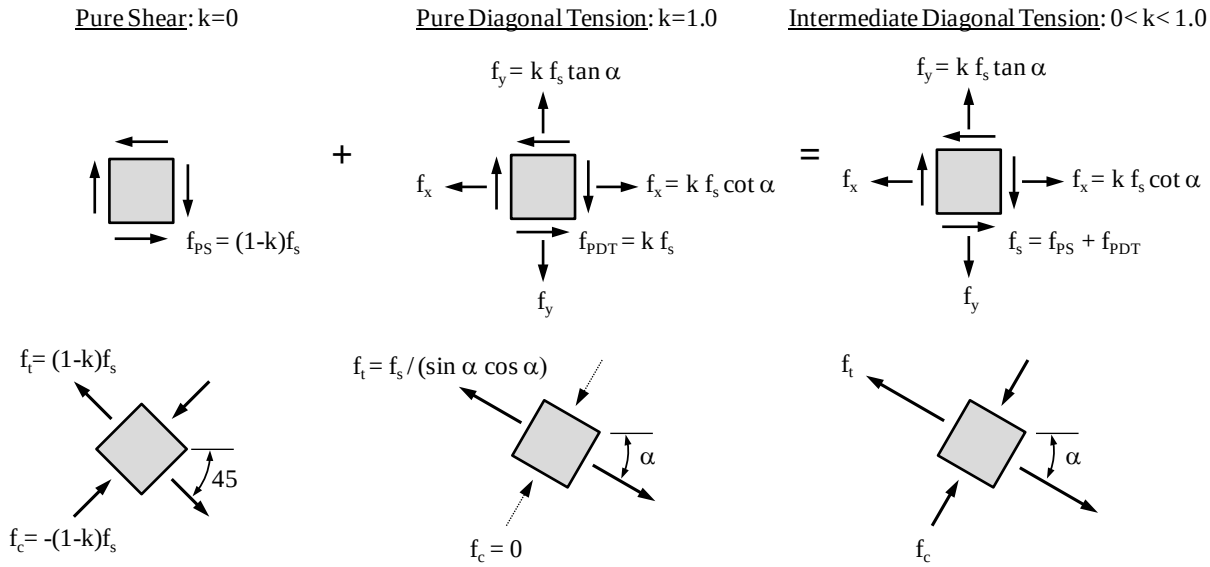

Figure 6.6.3-3: Web State of Stress for Differing Stages of Diagonal Tension

Notes on stress nonlinearity:
The stresses resulting from the use of the IDT method are a function of the diagonal tension factor, k, and *do not vary linearly with applied load*. The stresses are thus valid only for the applied load and may not be scaled. If stresses are desired at Limit load for life analyses, etc., the analysis must be performed at that load level. Due to the non linear behavior of IDT beams, obtaining the allowable applied load requires iteration.

If strength analyses are based upon non linear FEM results (e.g., NASTRAN SOL106), used in conjunction with the methods presented here, the following recommendations are made: Internal loads or grid point forces should be used, which will include both primary and secondary forces and moments. Note that a FEM constructed using shell elements is well-suited to internal loads extraction. Strength margins of safety should be calculated using the methods presented in this section. In static strength analyses, care must be taken to avoid regions of highly localized loading, such as those due to stress concentration or mesh transition. *The direct use of element stresses to calculate strength margins of safety is not recommended*.

6.6.3.1 Intermediate Diagonal Tension Beams – Web Strength and Stability Analysis

The following web checks are required per Table 6.6.3-2:

1. Maximum web buckling ratio < 5.0, for fatigue or stiffness critical structure (Table 6.6.3-2, Item 1)
2. Allowable diagonal tension factor per Table 6.6.3-4 (Table 6.6.3-2, Item 1)
3. Web shear strength (Table 6.6.3-2, Item 2)

These web checks are described in Sections 6.6.3.1.1 through 6.6.3.1.3.

Copyright 2016 Lockheed Martin Corporation.
Note: The current version is always the version on the Lockheed Martin network.

Fatigue note: Fleet service histories have shown that chem-milled webs may develop cracks at the stiffener and cap pad-ups if small radii are used. At these locations, out-of-plane bending stresses exist in the web due to the buckled waveform, as well as tension and shear. The state of stress for this detail is complex and component testing is recommended to perform reliable life analyses. Mitigation techniques include larger radii and surface treatment, such as peening.

6.6.3.1.1 Web Buckling Ratio

The average shear stress is used in the web stability analysis, as given by Equation 6.5.5-1.

$$q = \frac{V}{h_e}$$

$$f_s = \frac{q}{t}$$

Reference Equation 6.5.5-1

The web elastic buckling stress for IDT beams is given by Equation 6.6.3-1 and accounts for a variety of web attachment configurations.

$$F_{cr,el} = k_{ss}E\left(\frac{t}{d_c}\right)^2\left[R_h + \frac{1}{2}(R_d - R_h)\left(\frac{d_c}{h_c}\right)^3\right], \text{for } d_c < h_c$$

$$F_{cr,el} = k_{ss}E\left(\frac{t}{h_c}\right)^2\left[R_d + \frac{1}{2}(R_h - R_d)\left(\frac{h_c}{d_c}\right)^3\right], \text{for } d_c > h_c$$

Equation 6.6.3-1

Where:
k_{ss} is the web buckling coefficient (simply supported edges), from Figure 6.6.3-4 (a)
E is the web elastic modulus (psi)
t is the web thickness (in)
d_c is the clear stiffener spacing (in)
h_c is the clear web height (in)
R_h is the web restraint coefficient along the stiffener edge, from Figure 6.6.3-4 (b)
R_d is the web restraint coefficient along the cap edge, from Figure 6.6.3-4 (b)

The theoretical buckling coefficient, k_{ss}, for a web with simply supported edges is obtained from Figure 6.6.3-4(a). The web edge restraint coefficients, R_h and R_d, are obtained from Figure 6.6.3-4(b) and apply at the stiffener and cap attachments.

Copyright 2016 Lockheed Martin Corporation.
Note: The current version is always the version on the Lockheed Martin network.

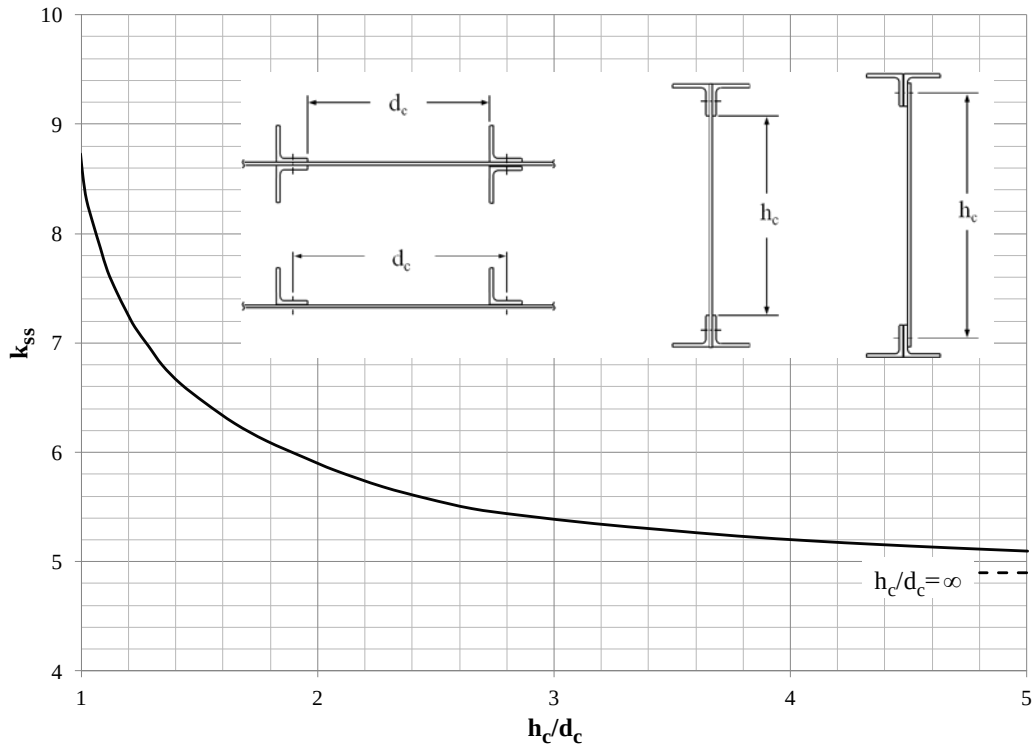

Figure 6.6.3-4(a): Web Buckling Coefficient

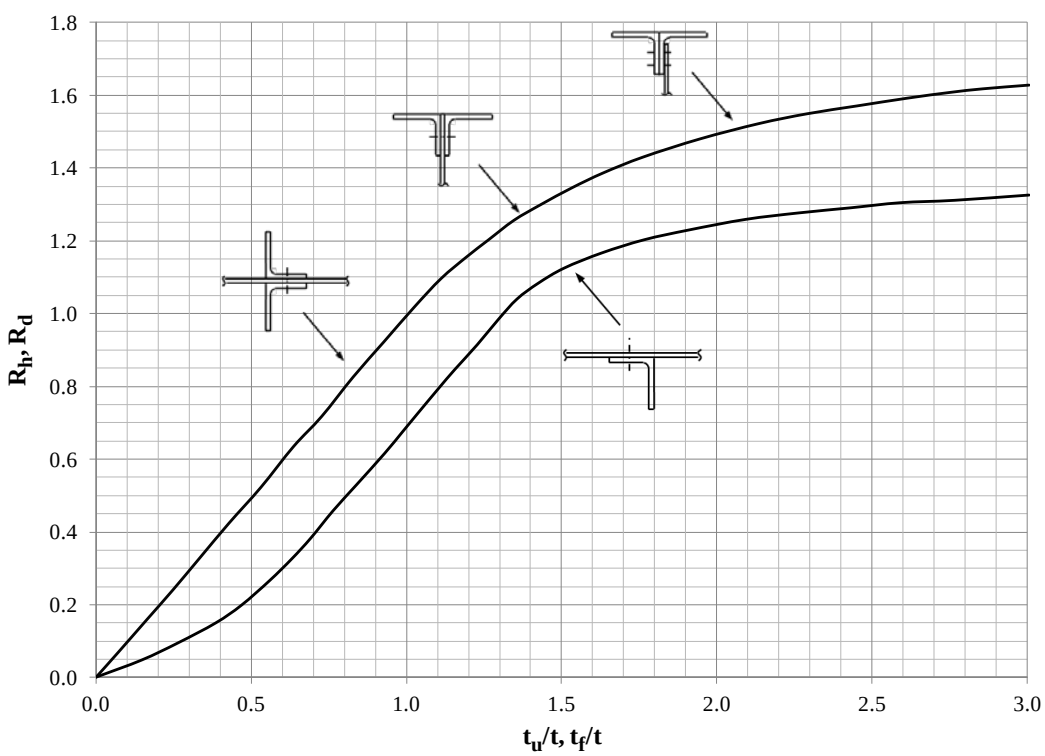

Figure 6.6.3-4(b): Web Restraint Coefficients

Copyright 2016 Lockheed Martin Corporation.
Note: The current version is always the version on the Lockheed Martin network.

Note that in Figure 6.6.3-4, t_u and t_f are the attached flange thicknesses for the stiffener and cap, respectively, as given in Table 6.6.3-3.

If the web elastic buckling stress exceeds the material proportional limit, plasticity correction is required per Section 10.3.1.2. The web plastic buckling stress is given by Equation 6.6.3-2.

$$F_{cr} = \eta\, F_{cr,el}$$ **Equation 6.6.3-2**

Where:
$F_{cr,el}$ is the elastic web buckling stress from Equation 6.6.3-1 (psi)
η is the plasticity correction factor from Section 10.3.1.2

Note that to develop the plasticity correction requires an iterative solution since it is a function of tangent and secant moduli which, in turn are a function of the stress level.

For 2024-T3 and 7075-T6 aluminum, the web buckling stress including plasticity correction, F_{cr}, may be obtained through use of Figure 6.6.3-5.

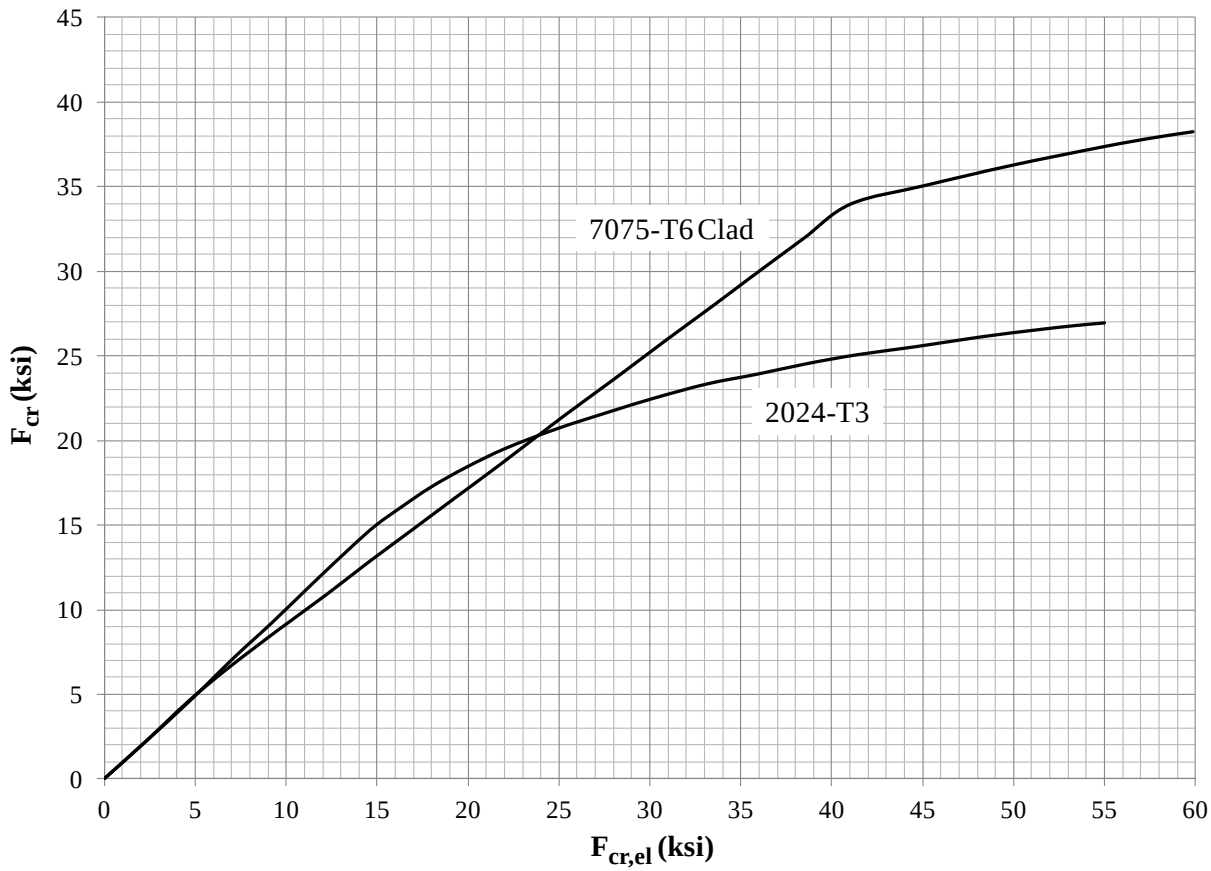

Figure 6.6.3-5: Web Plastic Buckling Stress

Copyright 2016 Lockheed Martin Corporation.
Note: The current version is always the version on the Lockheed Martin network.

The web buckling ratio expresses the degree of post-buckling and is greater than 1.0 in an IDT beam.

$$R = \frac{f_s}{F_{cr}} = \frac{q}{q_{cr}}$$ **Equation 6.6.3-3**

Where:
f_s is the web shear stress from Equation 6.5.5-1 (psi)
F_{cr} is the web buckling stress from Equation 6.6.3-2 (psi)
q is the web shear flow from Equation 6.5.5-1 (psi)
q_{cr} is the web buckling flow, obtained through use of Equation 6.6.3-2 (psi)

If the beam is part of a fatigue or stiffness critical assembly, the web buckling ratio is limited to a maximum value of 5.0, unless part specific testing is performed. The buckling ratio limit, in part, seeks to minimize an overall loss of stiffness in the structural assembly. In addition to potential flutter and other aeroelastic issues, internal loads may be invalid when the as-built stiffness deviates from analytical, noting that the true stiffness is difficult to predict. The structural certification of a beam with a buckling ratio exceeding 5.0 (in a fracture or stiffness critical assembly) should include a full scale component test program with static and fatigue tests. The web buckling Ratio-To-Requirement is given by Equation 6.6.3-4.

$$RTR_w = \frac{5.0}{\mathrm{R}} \geq 1.00$$ **Equation 6.6.3-4**

Where:
R is the web buckling ratio defined by Equation 6.6.3-3

6.6.3.1.2 Web Diagonal Tension Factor

The diagonal tension factor, k, represents the degree to which diagonal tension is developed by the applied shear load and is thus dependent upon of the level of post-buckling. The diagonal tension factor ranges from 0.0 for a pure shear web to 1.0 for the pure diagonal tension web and is given in Equation 6.6.3-5. Note that this equation applies to flat panels only.

$$k = \tanh\left[0.5\ log_{10}\frac{f_s}{F_{cr}}\right], \text{where } f_s > F_{cr}$$ **Equation 6.6.3-5**

Note that the equation may alternatively be written in terms of the shear flow, q:

$$k = \tanh\left[0.5\ log_{10}\frac{q}{q_{cr}}\right], \text{where } q > q_{cr}$$

Where:
f_s is the web shear stress from Equation 6.5.5-1 (psi)
F_{cr} is the web buckling stress from Equation 6.6.3-2 (psi)

The diagonal tension factor, k, may be obtained through use of Figure 6.6.3-6.

Copyright 2016 Lockheed Martin Corporation.
Note: The current version is always the version on the Lockheed Martin network.

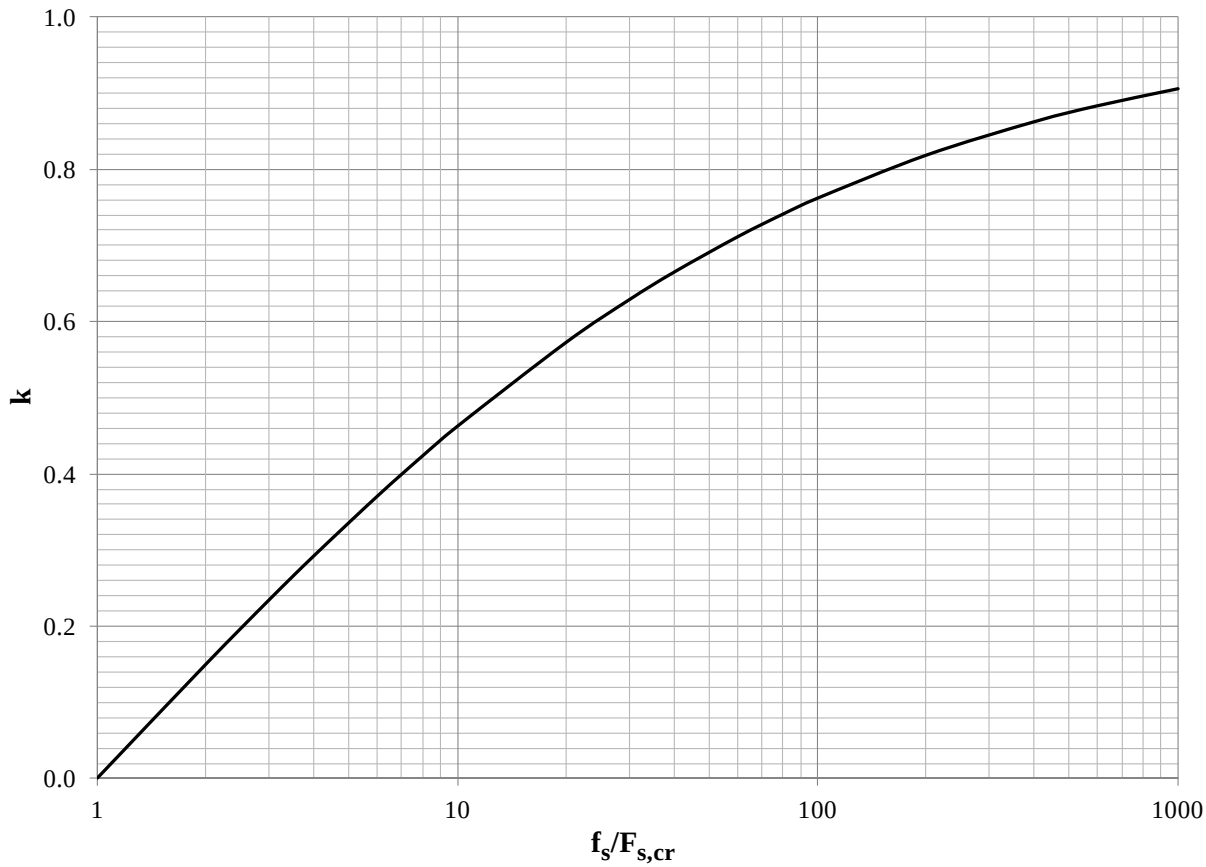

Figure 6.6.3-6: Diagonal Tension Factor, k

High levels of diagonal tension may result in web permanent set, which has been shown through fleet service histories to cause premature fatigue failures. To preclude web permanent set, it is recommended that the diagonal tension factor at Ultimate load be limited to the value given in Equation 6.6.3-6. Note that this recommendation applies to all structure, regardless of fatigue or stiffness classification.

$$k_{all} = 0.78 - \sqrt{t - 0.012}$$ **Equation 6.6.3-6**

Where:
t is the web thickness (in)
The allowable diagonal tension factors for common sheet thicknesses are given in Table 6.6.3-4.

Table 6.6.3-4: Allowable Diagonal Tension Factor for Standard Sheet Gages
(Reference Equation 6.6.3-6)

t, in	0.04	0.045	0.051	0.057	0.064	0.072	0.081	0.091	0.102
k_{all}	0.613	0.598	0.583	0.568	0.552	0.535	0.517	0.499	0.480

The diagonal tension Ratio-To-Requirement is given by Equation 6.6.3-7.

$$RTR_k = \frac{k_{all}}{k} \geq 1.00$$ **Equation 6.6.3-7**

Where:
k_{all} is the allowable diagonal tension factor defined by Equation 6.6.3-6
k is the diagonal tension factor defined by Equation 6.6.3-5

Copyright 2016 Lockheed Martin Corporation.
Note: The current version is always the version on the Lockheed Martin network.

6.6.3.1.3 Web Shear Strength

In post-buckled webs, the maximum shear stress is a function of the diagonal tension factor (k), the flange flexibility factor (ωd) and the intermediate diagonal tension angle (α).

The flange flexibility factor is given by Equation 6.6.3-8.

$$\omega d = 0.707d\left[\frac{t}{(I_T + I_C)h_e}\right]^{1/4} \qquad \textbf{Equation 6.6.3-8}$$

Where:
d is the stiffener spacing (in)
t is the web thickness (in)
h_e is the beam effective height, measured between cap centroids (in)
I_T is the tension cap moment of inertia (in^4)
I_C is the compression cap moment of inertia (in^4)

The ratio of the average stiffener axial stress to the web shear stress, f_u/f_s, is required to determine the diagonal tension angle. The f_u/f_s ratio is obtained from Figure 6.6.3-7.

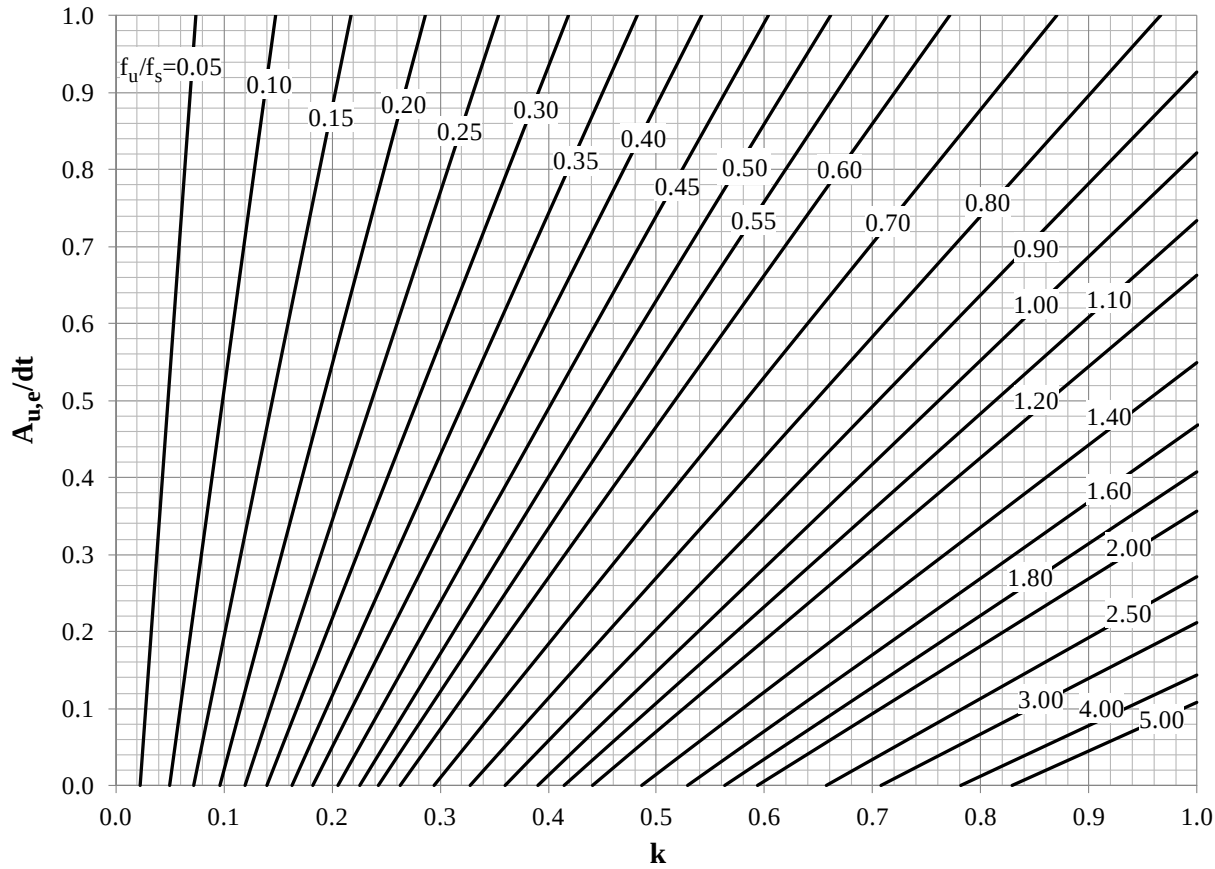

Figure 6.6.3-7: Stiffener Average Compression Stress

The cross-sectional area used to determine the f_u/f_s ratio in Figure 6.6.3-7 is dependent upon the stiffener configuration. If the stiffeners are double-sided, A_u is the area of both stiffeners; if the stiffeners are single-sided, use Equation 6.6.3-9 to calculate the effective cross-sectional area.

Copyright 2016 Lockheed Martin Corporation.
Note: The current version is always the version on the Lockheed Martin network.

$$A_{u,e} = \frac{A_u}{1 + \left(\frac{e}{\rho_u}\right)^2}$$ **Equation 6.6.3-9**

Where:
A_u is the stiffener cross-sectional area, excluding web (in^2)
e is the distance from web mid-plane to centroid of single-sided stiffener (in)
ρ_u is the stiffener radius of gyration (in)

Note that for a double-sided stiffener configuration, e=0, so $A_{u,e} = A_u$.

The intermediate diagonal tension angle, α, is determined through use of Figure 6.6.3-8.

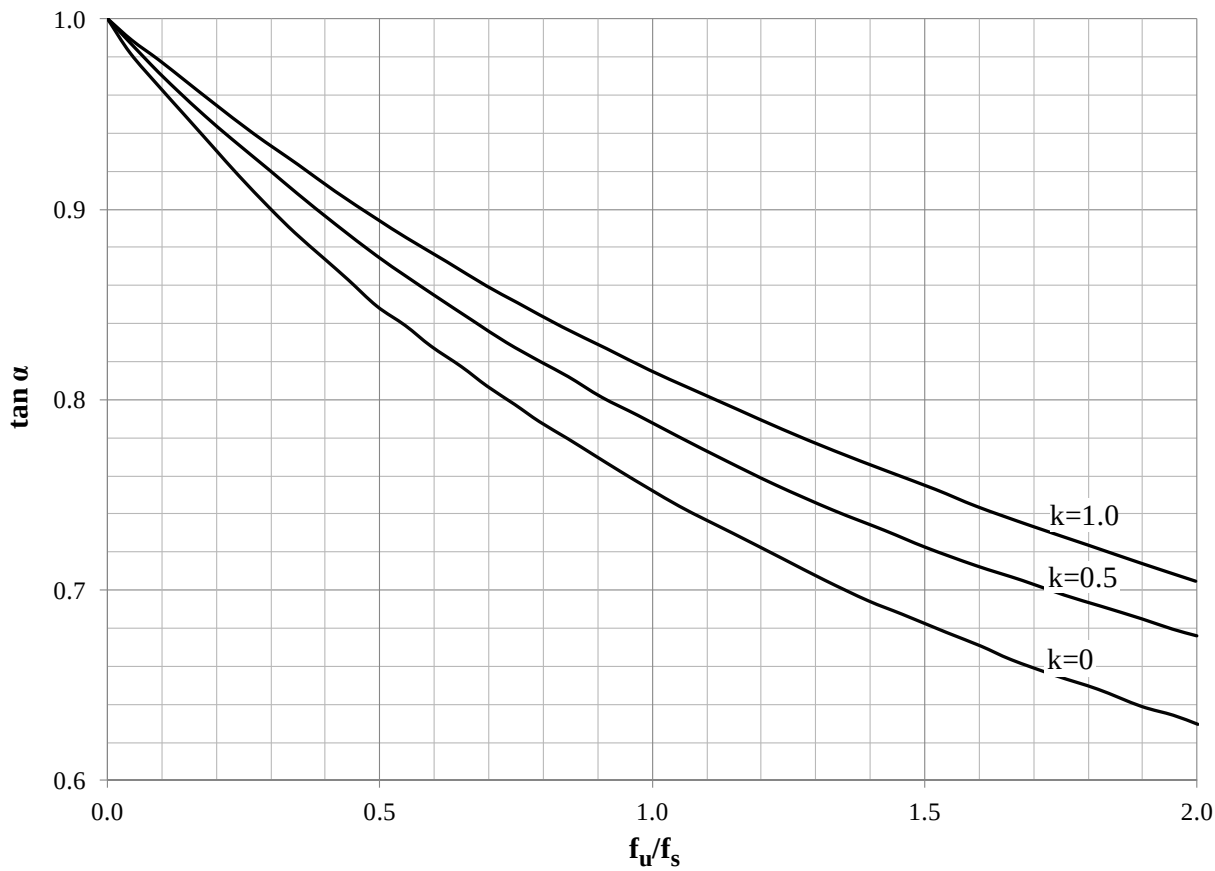

Figure 6.6.3-8: Diagonal Tension Angle

The diagonal tension angle is dependent upon the relative bending stiffness of the attaching web structure and is 45° only when the rigidity of flanges and stiffeners are equal. In practical beams, the flanges are usually more rigid than the stiffeners and the diagonal tension angle is less than 45°. The angle for typical beams does not deviate more than a few degrees from an average value of 40°.

Copyright 2016 Lockheed Martin Corporation.
Note: The current version is always the version on the Lockheed Martin network.

The web peak shear stress is given by Equation 6.6.3-10. The peak shear stress is located at the web-to-cap attachment line, shown as Item 2 in Figure 6.6.3-1.

$$f_{s,max} = f_s(1 + k^2 C_1)(1 + kC_2)$$ **Equation 6.6.3-10**

Where:
f_s is the web shear stress from Equation 6.5.5-1 (psi)
k is the diagonal tension factor from Equation 6.6.3-5
C_1 is the angle factor from Figure 6.6.3-9.
C_2 is a flange flexibility stress concentration factor from Figure 6.6.3-10

The angle factor, C_1, is obtained from Figure 6.6.3-9 and accounts for the IDT angle differing from 45°.

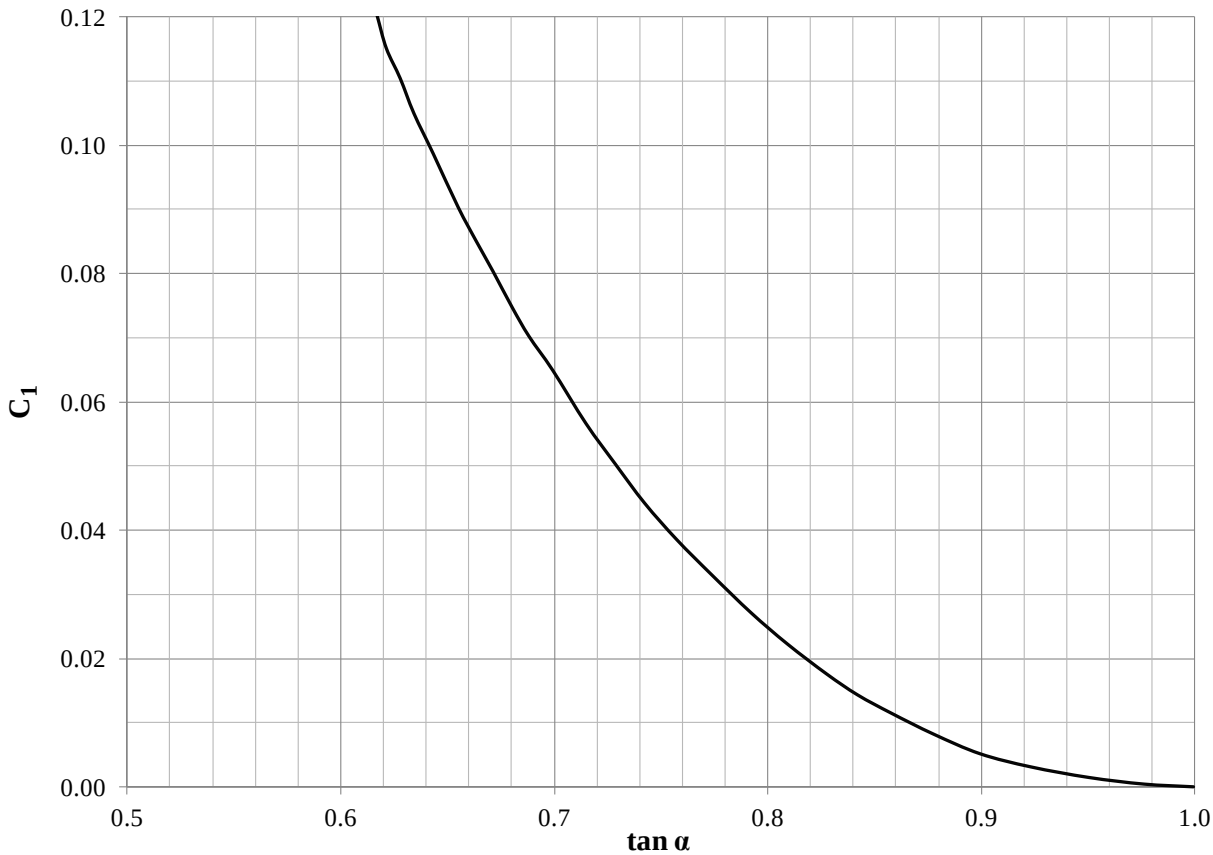

Figure 6.6.3-9: Angle Factor C_1

The stress concentration factors, C_2 and C_3, are obtained from Figure 6.6.3-10. These factors account for the bending flexibility of the flanges and are used in the web shear stress and bending moment calculations (Equations 6.6.3-10 and 6.6.3-40). Note that the flange flexibility factor, ωd, is previously given in Equation 6.6.3-8.

Copyright 2016 Lockheed Martin Corporation.
Note: The current version is always the version on the Lockheed Martin network.

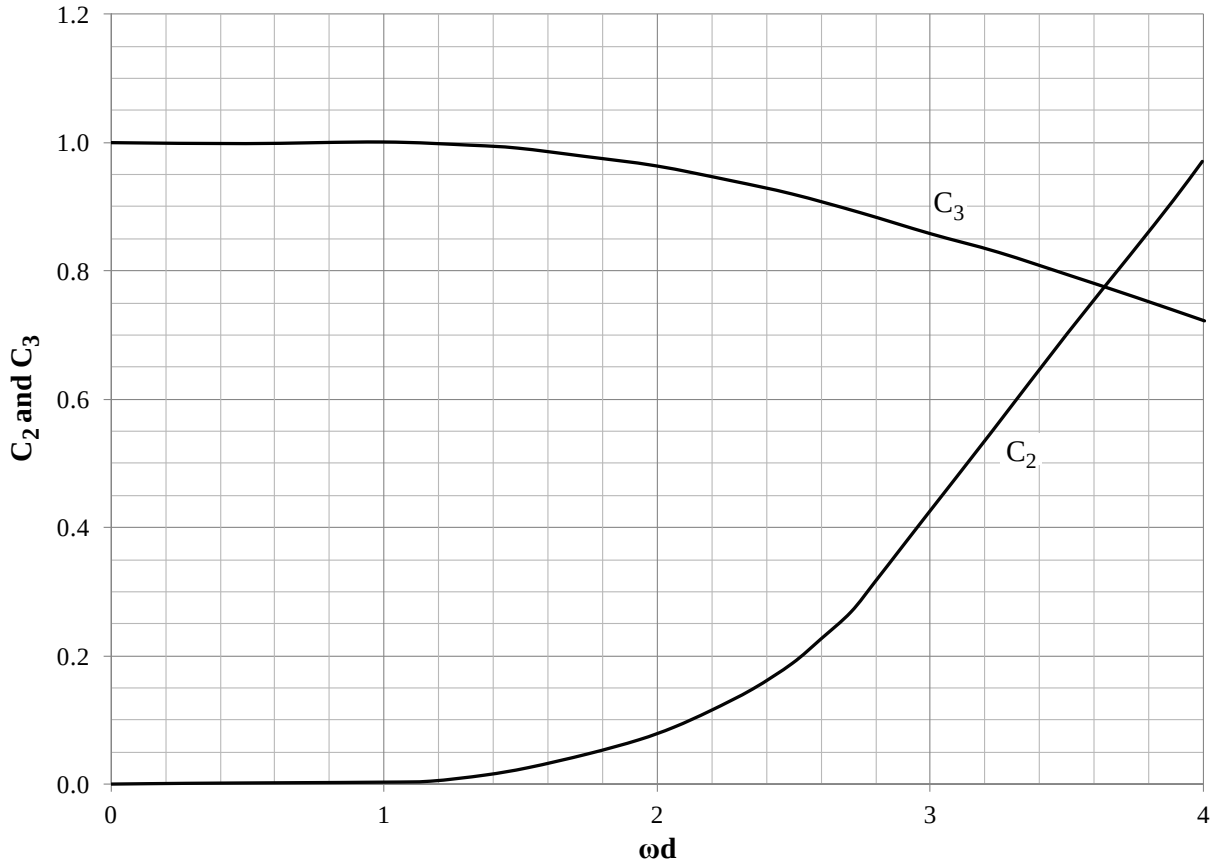

Figure 6.6.3-10: Stress Concentration Factors C_2 and C_3

The allowable web shear stress is empirical and depends upon the diagonal tension factor, k, and the details of the web-to-cap and web-to-stiffener attachments. Note that the allowable web shear stress includes net section effects.

The *basic* allowable web shear stress, F^*_{all}, is obtained from Figure 6.6.3-11, used with $\alpha_{PDT} = 45°$. The application of Figure 6.6.3-11 for different materials is specified in Table 6.6.3-5.

Table 6.6.3-5: Determination of Basic Shear Stress Allowable for Different Materials

Material	Figure
2000 Series Aluminum	6.6.3-11(a)
7000 Series Aluminum	6.6.3-11(b)
Titanium, all specifications	6.6.3-11(b)

For Titanium, Figure 6.6.3-11(b) is recommended for preliminary sizing only. It is advised that Core Engineering be consulted prior to final sizing of new parts or when performing strength analysis of existing structure.

Copyright 2016 Lockheed Martin Corporation.
Note: The current version is always the version on the Lockheed Martin network.

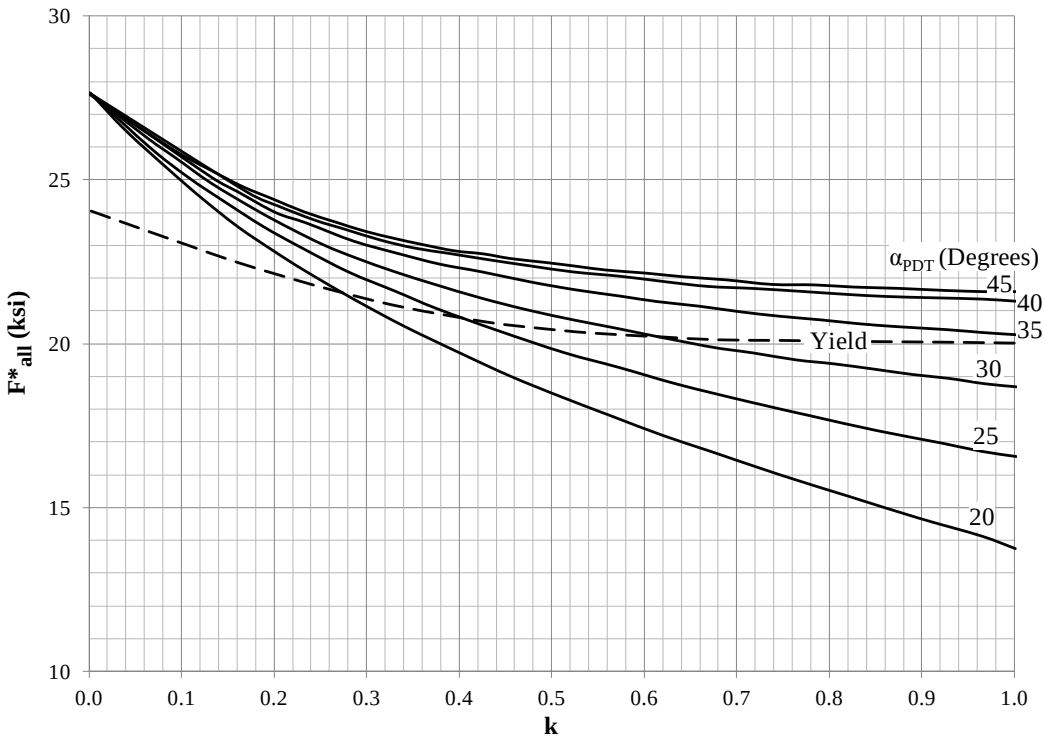

Figure 6.6.3-11(a): Basic Web Allowable Shear Stress – 2000 Series Aluminum
(Reference Equation 6.6.3-11, these values are modified prior to calculation of strength margin of safety)

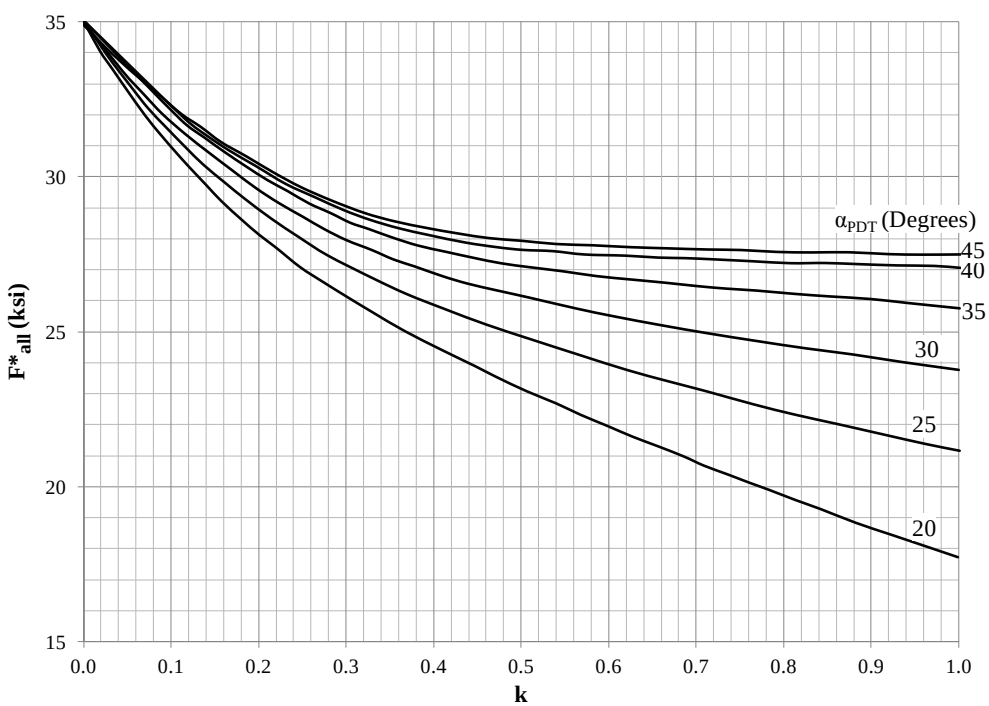

Figure 6.6.3-11(b): Basic Web Allowable Shear Stress – 7000 Series Aluminum and Titanium
(Reference Equation 6.6.3-11, these values are modified prior to calculation of strength margin of safety)

Copyright 2016 Lockheed Martin Corporation.
Note: The current version is always the version on the Lockheed Martin network.

The allowable web shear stress, F_{all}, includes factors to account for fastener type and web material strength and is given by Equation 6.6.3-11.

$$F_{all} = FF \times MF \times RS \times F^*_{all}$$ **Equation 6.6.3-11**

Where:
F^*_{all} is the basic web allowable shear stress from Figure 6.6.3-11(psi)
FF=Fastener Factor from Table 6.6.3-6
MF=Material Factor from Equation 6.6.3-12
RS = Shear Reduction Factor from Table 6.6.3-7

The Fastener Factors, FF, in Table 6.6.3-6 are based upon the testing described in Reference 6-33. During testing it was observed that web buckles extended to the attachment lines, causing out-of-plane bending stresses in the vicinity of the bolt heads[1]. Thus, in configurations where clearance bolt heads bear directly on the web, the 0.90 fastener factor shown in Table 6.6.3-6 is used in Equation 6.6.3-11. The bending stresses may be assumed negligible when the web is clamped by adjacent structure or a washer. Conversely, web strength improvements were seen in attachment configurations consisting of tight driven protruding head rivets, resulting in the 1.10 fastener factor shown in Table 6.6.3-6. Reference 6-1, SM02, specifies that the 1.10 fastener factor be used for transition or interference-fit protruding head bolts.

Table 6.6.3-6: Fastener Factor for use in Allowable Web Shear Stress Calculation

Fastener Configuration	Fastener Factor, FF
Clearance bolts with washer under head	1.0
Clearance bolts with web sandwiched between angles	1.0
Clearance bolts with head bearing directly on sheet	0.90
Tight driven protruding head rivet	1.10
Transition or interference fit bolt, with or without washer under head	1.10

The Material Factor, MF, is the ratio of the ultimate strength of the web material used in the analysis to the ultimate strength of the web sheet configuration tested in Reference 6-33. The Material Factor is given for different materials in Equation 6.6.3-12.

$$MF_{2000} = \frac{F_{tu}}{62.0\ ksi};\ \ for\ 2000\ series\ Aluminum$$ **Equation 6.6.3-12(a)**

$$MF_{7000} = \frac{F_{tu}}{72.0\ ksi};\ \ for\ 7000\ series\ Aluminum\ and\ Titanium$$ **Equation 6.6.3-12(b)**

Where:
F_{tu} is the tensile ultimate strength for the web material at the desired temperature (psi)

The Shear Reduction Factor, RS, is the ratio of the ultimate shear strengths of the web material in the L and L-T directions for plate material. This is necessary due to the directionality exhibited by some materials. For beams with webs constructed from sheet material RS=1.0. The Shear Reduction Factor is given in Table 6.6.3-7.

Table 6.6.3-7 Shear Reduction Factor for use in Allowable Web Shear Stress Calculation

Beam Web Product Form	Shear Reduction Factor, RS
Sheet Material (Built-up beams)	*RS=1.0*
Plate or Forging (Machined Construction)	$RS = \frac{Minimum(F_{su-L}, F_{su-LT})}{Maximum(F_{su-L}, F_{su-LT})} \leq 1.0$

[1] Due to web bending at the buckle run-out, web pad-ups at flange and stiffener attachments are preferred for fatigue resistance. Adequate radii must be provided at the web-to-pad fillets.

Copyright 2016 Lockheed Martin Corporation.
Note: The current version is always the version on the Lockheed Martin network.

The web strength margin of safety is calculated using the allowable web shear stress from Equation 6.6.3-11 and the web peak shear stress from Equation 6.6.3-10. The web strength margin of safety is given by Equation 6.6.3-13.

$$MS_{ult} = \frac{F_{all}}{f_{s,max}} - 1 \qquad \textbf{Equation 6.6.3-13}$$

Where:
F_{all} is the allowable web shear stress from Equation 6.6.3-11 (psi)
$f_{s,max}$ is the web peak shear stress from Equation 6.6.3-10 (psi)

6.6.3.2 Intermediate Diagonal Tension Beams – Stiffener Analysis

The following checks are required for mechanically attached stiffeners[1]:

1. Compression yield analysis using the average stiffener stress (Table 6.6.3-2, Item 3)
2. Column buckling using the average stiffener stress (Table 6.6.3-2, Item 4)
3. Forced crippling using the maximum stiffener stress (Table 6.6.3-2, Item 5)
4. Minimum inertia per Section 6.6.1.10 (Table 6.6.3-2, Item 6)
5. Inter-rivet buckling of the web at the stiffener attachment (Table 6.6.3-2, Item 7)
6. Beam-column strength, if lateral pressure exists, using the average stiffener stress (Table 6.6.3-2, Item 8)

These stiffener checks are described in Sections 6.6.3.2.1 through 6.6.3.2.6. All checks include curvature and thermal loads as applicable.

6.6.3.2.1 Compression Yield Analysis

The compression yield analysis uses the stiffener average compression stress, f_u, obtained from Equation 6.6.3-14 or 6.6.3-15. The average compression stress is entirely due to diagonal tension effects, thus, this stress does not include any directly applied loads or those due to curvature, thermal effects, etc. For single-sided stiffeners, the stress is average along the stiffener length but applies only at the mid-plane of the web attached to the stiffener. At a given stiffener section, the compression stress decreases with increasing distance from the web mid-plane and may be tensile at the stiffener free edge. This distribution is due to eccentric loading on the stiffener cross section. For double-sided stiffeners, the stress is the average along the stiffener length and is uniform across the cross section. The stiffener average compression stress is obtained through use of Figure 6.6.3-7 and Equation 6.6.3-14.

$$f_u = \frac{f_u}{f_s} \times f_s \qquad \textbf{Equation 6.6.3-14}$$

Where:
f_u / f_s is the ratio of the stiffener average compression stress to the web shear stress from Figure 6.6.3-7
f_s is the web shear stress from Equation 6.5.5-1 (psi)

The stiffener average compression stress may be calculated directly through the use of Equation 6.6.3-15. Note that the use of Figure 6.6.3-7 / Equation 6.6.3-14 and Equation 6.6.3-15 provide similar results.

$$f_u = \frac{k\, f_s \tan\alpha}{\frac{A_{ue}}{d\,t} + 0.50(1-k)} \qquad \textbf{Equation 6.6.3-15}$$

Where:
k is the diagonal tension factor from Equation 6.6.3-5
f_s is the web shear stress from Equation 6.5.5-1 (psi)
d is the stiffener spacing (in)
t is the web thickness (in)
tan α is given by Figure 6.6.3-8
A_{ue} is stiffener effective cross-sectional area (not including web) from Equation 6.6.3-9 (in^2)

[1] The analysis methods for integrally machined stiffeners are discussed in Section 6.6.4.

Copyright 2016 Lockheed Martin Corporation.
Note: The current version is always the version on the Lockheed Martin network.

The margin of safety for compression yield of the stiffener is calculated using Equation 6.6.3-16.

$$MS_{ult} = \frac{F_{cy}}{f_u} - 1 \qquad \textbf{Equation 6.6.3-16}$$

Where:
F_{cy} is the compression yield strength for the stiffener material at the desired temperature (psi)
f_u is the stiffener average compression stress from Equation 6.3.6-14 or 6.3.6-15 (psi)

6.6.3.2.2 Column Buckling Analysis

The column buckling analysis uses the stiffener average compression stress, f_u, obtained from Equation 6.6.3-14 or 6.6.3-15. Under load, as the stiffener begins to deflect normal to the web prior to column buckling, web tensile forces develop components normal to the plane of the web. These forces tend to force the stiffener back to its undeflected position and form an elastic foundation over the column length. This effect is accounted for through use of an effective length in the column buckling analysis, shown in Equations 6.6.3-17 and 6.6.3-18. Note that in all cases the slenderness ratio is given by the parameter L_e/ρ_u.

The effective column length for double-sided stiffeners is given by Equation 6.6.3-17.

$$L_e = \frac{h_u}{\sqrt{1 + k^2\left(3 - 2\frac{d}{h}\right)}}\,, \text{ for } d/h < 1.5 \qquad \textbf{Equation 6.6.3-17(a)}$$

$$L_e = h_u\,, \text{ for } d/h > 1.5 \qquad \textbf{Equation 6.6.3-17(b)}$$

The effective column length for single-sided stiffeners is given by Equation 6.6.3-18.

$$L_e = \frac{h_u}{2} \qquad \textbf{Equation 6.6.3-18}$$

Where:
ρ_u is the stiffener radius of gyration (in)
h_u is the stiffener height measured between stiffener-to-flange fastener rows (in)
k is the diagonal tension factor from Equation 6.6.3-5
d is the stiffener spacing (in)
h is the beam OML height (in)
Note that in Equation 6.6.3-18, the effective column length is based upon the “two-wave” buckle pattern observed during testing of slender stiffeners in Reference 6-33.

Using the appropriate slenderness ratio from Equation 6.6.3-17 or 6.6.3-18, the column buckling curves in Section 8.2 are used to determine the column buckling stress, F_{col}. The stiffener margin of safety for column buckling is calculated using Equation 6.6.3-19.

$$MS_{ult} = \frac{F_{col}}{f_u} - 1 \qquad \textbf{Equation 6.6.3-19}$$

Where:
F_{col} is the column buckling stress for the stiffener material at the desired temperature (psi)
f_u is the stiffener average compression stress from Equation 6.6.3-14 or 6.6.3-15 (psi)

6.6.3.2.3 Forced Crippling Analysis

The forced crippling analysis uses the stiffener maximum compression stress, $f_{u,max}$, obtained from Figure 6.6.3-12. The maximum compression stress is entirely due to diagonal tension effects and, as is the case with the average

Copyright 2016 Lockheed Martin Corporation.
Note: The current version is always the version on the Lockheed Martin network.

stress, additional load sources must be superimposed as applicable. The maximum stress occurs at the stiffener mid-height and decreases to its minimum value at the ends of the stiffener.

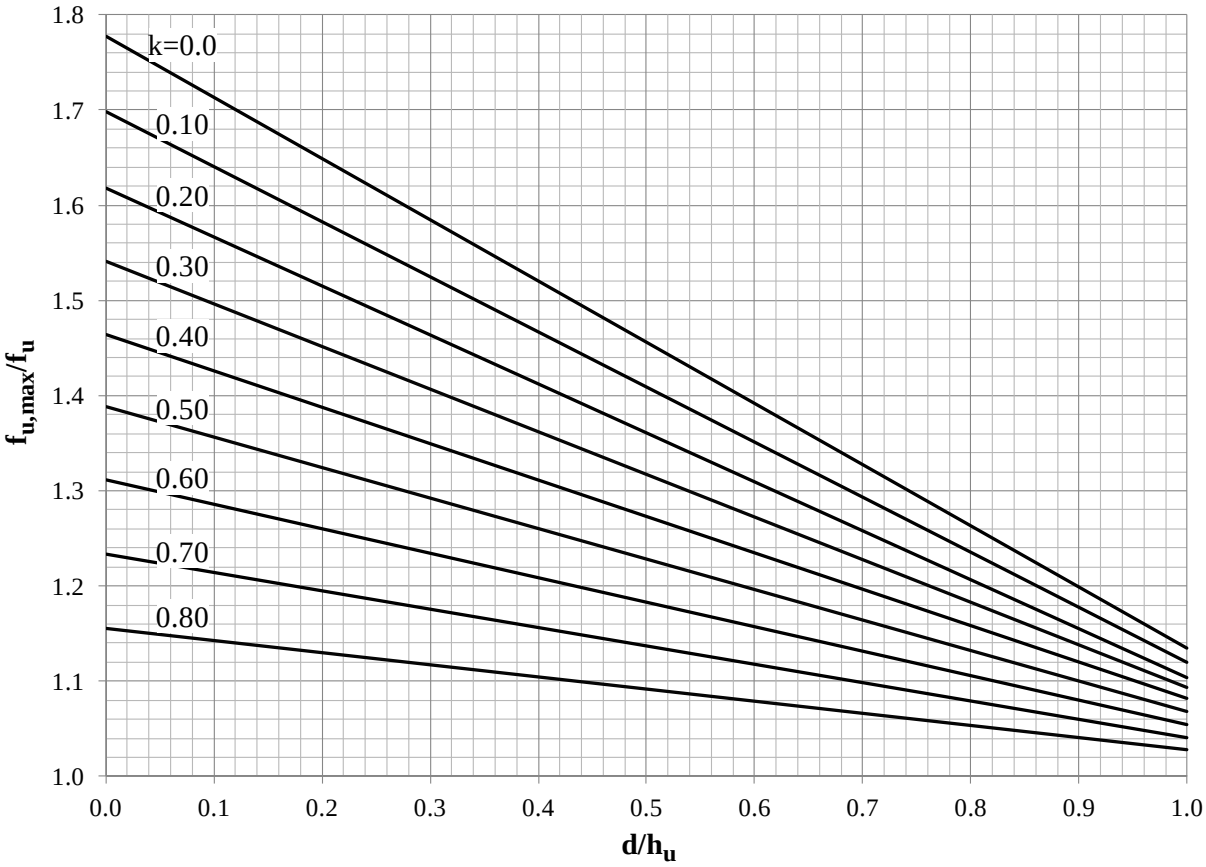

Figure 6.6.3-12: Ratio of Maximum Stress to Average Stress in Web Stiffener

The stiffener maximum compression stress is obtained through use of Figure 6.6.3-12 and Equation 6.6.3-20.

$$f_{u,max} = \frac{f_{u,max}}{f_u} \times f_u \qquad \textbf{Equation 6.6.3-20}$$

Where:
$f_{u,max}$ / f_u is the ratio of the maximum stiffener compression stress to the average stiffener compression stress, from Figure 6.6.3-12
f_u is the stiffener average compression stress from Equation 6.6.3-14 or 6.6.3-15 (psi)

The stiffener maximum compression stress is used to perform the forced crippling analysis at the stiffener mid-height. Forced crippling is a local failure condition where the shear buckles which form in the web tend to force buckling of the stiffener leg attached to the web. The weakened stiffener will then induce buckling of the outstanding leg, which results in failure of the entire section. Forced crippling is most pronounced where the stiffener thickness is less than the web thickness. The state of stress is more severe with double-sided stiffeners; some relief is provided to single-sided stiffeners by the reduction in compression stress away from the web mid-plane, as discussed earlier in this section. The forced crippling allowable stress for single stiffeners is thus greater than double stiffeners, as seen in Equations 6.6.3-21(b) and 6.6.3-21(c).

The elastic forced crippling stress is:

Copyright 2016 Lockheed Martin Corporation.
Note: The current version is always the version on the Lockheed Martin network.

$$F_{o,e} = \frac{E_u}{(b/t)_e^2}$$ **Equation 6.6.3-21(a)**

For double-sided stiffeners:

$$(b/t)_e = \frac{5.55}{\left(F_{cy,u}/E_u\right)^{1/4} k^{1/3}(t_u/t)^{1/6}}$$ **Equation 6.6.3-21(b)**

For single-sided stiffeners:

$$(b/t)_e = \frac{5.00}{\left(F_{cy,u}/E_u\right)^{1/4} k^{1/3}(t_u/t)^{1/6}}$$ **Equation 6.6.3-21(c)**

Where:
E_u is the stiffener elastic modulus at the desired temperature (psi)
$(b/t)_e$ is the effective flange width-to-thickness ratio given in Equation 6.6.3-22
$F_{cy,u}$ is stiffener compression yield strength at the desired temperature (psi)
k is the diagonal tension factor from Equation 6.6.3-5
t_u is the stiffener thickness (in)
t is the web thickness (in)

If the elastic forced crippling stress from Equation 6.6.3-21(a) exceeds the material proportional limit, plasticity correction is required per Section 8.2. The plastic forced crippling stress is given by Equation 6.6.3-22.

$$F_{o,pl} = \eta\, F_{o,e}$$ **Equation 6.6.3-22**

Where:
$F_{o,e}$ is the elastic forced crippling stress for the stiffener material at the desired temperature (psi)
η is the plasticity correction factor from Equation 8.2.1-6

The forced crippling margin of safety at the stiffener mid-height is calculated using Equation 6.6.3-23.

$$MS_{ult} = \frac{F_{o,pl}}{f_{u,max}} - 1$$ **Equation 6.6.3-23**

Where:
$F_{o,pl}$ is the plastic forced crippling stress for the stiffener material at the desired temperature (psi)
$f_{u,max}$ is the stiffener maximum compression stress from Equation 6.6.3-20 (psi)

6.6.3.2.4 Stiffener Required Inertia Check

The stiffener minimum moment of inertia requirement is similar to the shear resistant beam. Whether the panel is buckled or unbuckled, the stiffener must enforce a node for the web stability analyses to be valid.For the IDT beam, the buckling coefficient (k_{ss}) from Figure 6.6.3-4(a) is used in Equation 6.6.1.2 in place of K_s.

Neither a margin of safety nor a ratio-to-requirement is written for minimum inertia; the stiffener moment of inertia is simply shown to be greater than the required value. The analysis method is described in Section 6.6.1.10; note that the minimum stiffener thicknesses from Table 6.6.1-2 apply

Copyright 2016 Lockheed Martin Corporation.
Note: The current version is always the version on the Lockheed Martin network.

6.6.3.2.5 Inter-rivet Buckling Analysis

When attached to single-sided stiffeners, the web must be checked for inter-rivet buckling using the methods from Section 8.6. If the thickness of the attached stiffener leg is less than the web thickness, the stiffener is also checked. This analysis is done using the maximum stiffener stress, $f_{u.max}$, in addition to any directly applied loads and those due to curvature, thermal effects, etc. Note that with double-sided stiffener configurations, web inter-rivet buckling is not possible.

The inter-rivet buckling margin of safety at the stiffener mid-height is calculated using Equation 6.6.3-24.

$$MS_{ult} = \frac{F_{IR}}{f_{u,max}} - 1$$ **Equation 6.6.3-24**

Where:
F_{IR} is the minimum inter-rivet buckling stress for the web or stiffener, at the desired temperature (psi)
$f_{u,max}$ is the stiffener maximum compression stress from Equation 6.6.3-20 (psi)

6.6.3.2.6 Beam Column Analysis

If the beam is loaded by lateral pressure, a stiffener strength analysis including beam column action is made using the methods from Section 8.3. The margin of safety includes bending and compression interaction, calculated as shown in Equation 6.3.6-12.

$$MS_{ult} = \frac{1}{R_b + R_c} - 1$$ **Reference Equation 6.3.6-12**

Where:
R_b is the stiffener bending ratio, through use of Equation 6.3.3-9
R_c is the stiffener axial load ratio, through use of Equation 6.3.3-11

6.6.3.3 Intermediate Diagonal Tension Beams – Joint Analysis

The following joint checks are required:

1. Web-to-flange joint shear strength (Table 6.6.3-2, Item 9)
2. Stiffener-to-flange joint shear strength (Table 6.6.3-2, Item 10)
3. Stiffener-to-web joint shear strength (Table 6.6.3-2, Item 11)
4. Stiffener-to-web joint tension strength (Table 6.6.3-2, Item 12)

To determine allowable joint loads, published strength values (found in Reference 6-1 or 6-5) should be used wherever possible. If published data are not available and joint strengths are calculated, the methods given in Section 5 are used.

Note that in Items 1 through 3 above, “joint shear strength” does not imply fastener shear strength only. If the joint strength is calculated, the minimum of the sheet bearing and fastener shear strengths is used to determine the margin of safety. Shear strength data from Reference 6-1 or 6-5 use tested values and reflect the minimum of the shear failure modes.

Copyright 2016 Lockheed Martin Corporation.
Note: The current version is always the version on the Lockheed Martin network.

6.6.3.3.1 Web-to-Flange Attachments

The design shear flow between the web and flange includes the effects of diagonal tension and is given by Equation 6.6.3-25.

$$q_r = \frac{V}{h_r}(1 + 0.414\,k) \qquad \textbf{Equation 6.6.3-25}$$

Where:
V is the applied shear load (lb)
t is the web thickness (in)
h_r is the beam height measured between web-to-flange fastener rows (in)
k is the diagonal tension factor from Equation 6.6.3-5

The design shear flow is converted to an individual fastener load using Equation 6.6.3-26.

$$P_{shr} = \frac{q_r\,p}{n} \qquad \textbf{Equation 6.6.3-26}$$

Where:
q_r is the design shear flow (lb/in)
p is the web-to-flange fastener pitch (in)
n is the number of fastener rows attaching the web to flange

The joint shear margin of safety at the web-to-flange attachment is calculated using Equation 6.6.3-27. As described in Section 6.6.3.3, the *joint* shear strength represents the minimum of the sheet bearing and *fastener* shear strengths, when calculated individually. Published strength data from Reference 6-1 or 6-5 should be used whenever possible.

$$MS_{ult} = \frac{P_{all,shr}}{P_{shr}} - 1 \qquad \textbf{Equation 6.6.3-27}$$

Where:
$P_{all,shr}$ is the joint shear strength per fastener (lb)
P_{shr} is the joint shear load per fastener (lb)

6.6.3.3.2 Stiffener-to-Flange Attachments

The check of the stiffener-to-flange attachments is made using the average stiffener stress, f_u, in addition to any directly applied loads and those due to curvature, thermal effects, etc. Note that two fasteners should be used for this joint, particularly when the stiffener is joggled at the flange attachment.

The axial load acting at the upper and lower ends of a double-sided stiffener is given by Equation 6.6.3-28(a).

$$P_u = f_u A_u \qquad \textbf{Equation 6.6.3-28(a)}$$

The axial load acting at the upper and lower ends of a single-sided stiffener is given by Equation 6.6.3-28(b).

$$P_u = f_u A_{u,e} \qquad \textbf{Equation 6.6.3-28(b)}$$

Where:
f_u is the average stiffener stress (psi)
A_u is the stiffener cross-sectional area, excluding web (in^2)
$A_{u,e}$ is the effective stiffener cross-sectional area from Equation 6.6.3-9 (in^2)

Copyright 2016 Lockheed Martin Corporation.
Note: The current version is always the version on the Lockheed Martin network.

The axial load is converted to an individual fastener load using Equation 6.6.3-29.

$$P_{shr} = \frac{P_u}{n} \qquad \textbf{Equation 6.6.3-29}$$

Where:
P_u is the stiffener axial load at the flange attachment (lb)
n is the number of fasteners attaching the stiffener to flange
The joint shear margin of safety at the stiffener-to-flange attachment is calculated using Equation 6.6.3-30. As described in Section 6.6.3.3, the *joint* shear strength represents the minimum of the sheet bearing and *fastener* shear strengths, when calculated individually. Published strength data from Reference 6-1 or 6-5 should be used whenever possible.

$$MS_{ult} = \frac{P_{all,shr}}{P_{shr}} - 1 \qquad \textbf{Equation 6.6.3-30}$$

Where:
$P_{all,shr}$ is the joint shear strength per fastener (lb)
P_u is the joint shear load per fastener (lb)

6.6.3.3.3 Web-to-Stiffener Attachments - Shear

Attachments between double-sided stiffeners and the web must have sufficient shear strength to ensure that the stiffeners act as a integral unit prior to column buckling. The required *total* single shear strength of all fasteners between the stiffeners and web is given by Equation 6.6.3-31. *Note that this check is not required for single-sided stiffeners.*

$$R_u = \frac{2\, F_{cy,u}\, Q\, h_u}{b\, L_e} \qquad \textbf{Equation 6.6.3-31}$$

Where:
$F_{cy,u}$ is stiffener compression yield strength (psi)
Q is the static moment of one stiffener about the web mid-plane (in^3)
h_u is the stiffener height measured between stiffener-to-flange fastener rows (in)
b is the length of the stiffener outstanding leg (in)
L_e is the effective column length for double-sided stiffeners from Equation 6.6.3-17 (in)

The margin of safety for the double-sided stiffener-to-web shear attachments is given by Equation 6.6.3-32. As described in Section 6.6.3.3, the *joint* shear strength represents the minimum of the sheet bearing and *fastener* shear strengths, when calculated individually. Published strength data from Reference 6-1 or 6-5 should be used whenever possible.

$$MS_{ult} = \frac{\Sigma P_{all,shr}}{R_u} - 1 \qquad \textbf{Equation 6.6.3-32}$$

Where:
$\Sigma P_{all,shr}$ is the total joint shear allowable load between the stiffeners and web (lb)
R_u is the required total joint shear strength between the stiffeners and web, from Equation 6.6.3-31 (lb)

6.6.3.3.4 Web-to-Stiffener Attachments - Tension

The wrinkles in a post-buckled web create tensile forces between the web and stiffener. The attachments must have sufficient strength to prevent failures either by fastener tension or web pull-through. The required tensile strengths for double and single stiffener configurations are given by Equation 6.6.3-33; note that these are given on a lb/in basis.

The required web pull-off strength for a double-sided stiffener attachment is:

$$N_u = 0.15\, t\, F_{tu} \qquad \textbf{Equation 6.6.3-33(a)}$$

Copyright 2016 Lockheed Martin Corporation.
Note: The current version is always the version on the Lockheed Martin network.

The required web pull-off strength for a single-sided stiffener attachment is:

$$N_u = 0.22\ t\ F_{tu}$$ **Equation 6.6.3-33(b)**

Where:
t is the web thickness (in)
F_{tu} is the web tensile strength at the desired temperature (psi)

The required web tensile strength per attachment is:

$$P_u = N_u s_u$$ **Equation 6.6.3-34**

Where:
N_u is the required pull-off strength per inch from Equation 6.6.3-33(a) or (b)
s_u is the web-to-stiffener fastener spacing (in)

To determine the margin of safety, the required joint tensile strength is compared with the allowable joint tensile strength for the configuration. If joint tension data are not available, the allowable tensile strength is the lower of the fastener tensile and web pull-through strengths. The bolt tensile strength is available from Reference 6-1, SM65, Reference 6-5 or the IDAT fastener database; temperature correction must be included as applicable.

If required, the web pull-through strength is approximated using Equation 6.6.3-35.

$$P_{pt} = F_{su}\ t\ \pi\ d_h$$ **Equation 6.6.3-35**

Where:
F_{su} is the web shear strength at the desired temperature (psi)
t is the web thickness (in)
d_h is the bolt head diameter (in)

The margin of safety for the web-to-stiffener joint tensile strength is given by Equation 6.6.3-36.

$$MS_{ult} = \frac{P_{all,t}}{P_u} - 1$$ **Equation 6.6.3-36**

Where:
$P_{all,t}$ is the joint tensile strength per attachment, at the desired temperature (lb)
P_u is the required web tensile strength per attachment (lb)

6.6.3.4 Intermediate Diagonal Tension Beams – Flange Analysis

The following flange checks are required:

1. Compression flange strength and stability (Table 6.6.3-2, Items 13 and 14)
2. Tension flange strength (Table 6.6.3-2, Item 15)

The total flange stress due to the externally applied shear load includes three components:

(a) The primary beam bending stress. This stress consists of shear resistant and post-buckled portions, calculated using the beam section properties before and after web buckling.
(b) The secondary flange bending stress due to the vertical component of the diagonal tension load.
(c) The secondary flange axial stress due to the horizontal component of the diagonal tension load. This component is compressive on the upper and lower flanges.

The components above do not include any stresses due to intermediate applied loads or thermal effects; these are superimposed as applicable. The flange stress components are described in the following Items (a) through (c).

(a) The primary beam bending stresses are determined as follows:
The bending moment at the point of web buckling is the portion carried as a shear resistant beam:

$$M_{SR} = M(1 - k)$$ **Equation 6.6.3-37(a)**

Copyright 2016 Lockheed Martin Corporation.
Note: The current version is always the version on the Lockheed Martin network.

The bending moment beyond the point of web buckling is the portion carried as a post-buckled beam:

$$M_{PB} = M(k)$$ **Equation 6.6.3-37(b)**

Where:
M is the beam bending moment at the analysis location (in-lb)
k is the diagonal tension factor from Equation 6.6.3-5

The bending stress as a shear resistant beam is:

$$f_{b,SR} = \frac{M_{SR}(h/2)}{I_{SR}}$$ **Equation 6.6.3-38(a)**

The bending stress as a post-buckled beam is:

$$f_{b,PB} = \frac{M_{PB}(h/2)}{I_{PB}}$$ **Equation 6.6.3-38(b)**

Where:
M_{SR}, M_{PB} are the shear resistant and post-buckled beam bending moments from Equation 6.6.3-37 (in-lb)
h is the beam OML height (in)
I_{SR}, I_{PB} are the beam section properties before and after web buckling (in^4).

The beam section idealizations before and after web buckling are shown in Figure 6.6.3-13, represented by moments of inertia I_{SR} and I_{PB}.

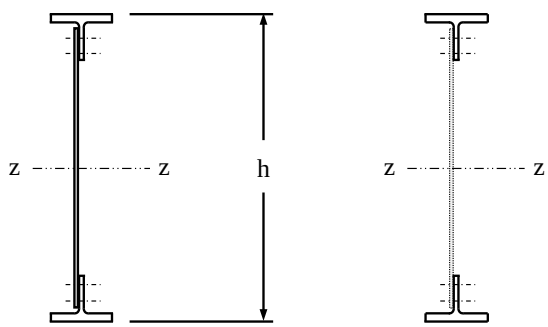

I_{SR}
Including Web

I_{PB}
Not Including Web

Figure 6.6.3-13: Shear Resistant and Post-Buckled Beam Sections

The total primary bending stresses at the beam OML are the sum of the shear resistant and post-buckled bending stresses:

$$f_{b,pr} = f_{b,SR} + f_{b,PB}$$ **Equation 6.6.3-39**

Where:
$f_{b,SR}$ and $f_{b,PB}$ are the beam shear resistant and post buckled bending stresses from Equation 6.6.3-38 (psi)

(b) The beam flange secondary bending moments are given in Equation 6.6.3-40 and shown in Figure 6.6.3-14.

$$M_{sec}^{1-1} = -\frac{1}{24}\, k\, f_s\, t\, d^2 C_3$$ **Equation 6.6.3-40(a)**

$$M_{sec}^{2-2} = \frac{1}{12}\, k\, f_s\, t\, d^2 C_3$$ **Equation 6.6.3-40(b)**

Where:

Copyright 2016 Lockheed Martin Corporation.
Note: The current version is always the version on the Lockheed Martin network.

k is the diagonal tension factor from Equation 6.6.3-5
f_s is the web shear stress (psi)
t is the web thickness (in)
d is the stiffener spacing (in)
C_3 is the stress concentration factor from Figure 6.6.3-10

The beam flange secondary bending moments are shown in Figure 6.6.3-14 and act on the effective flange sections only.

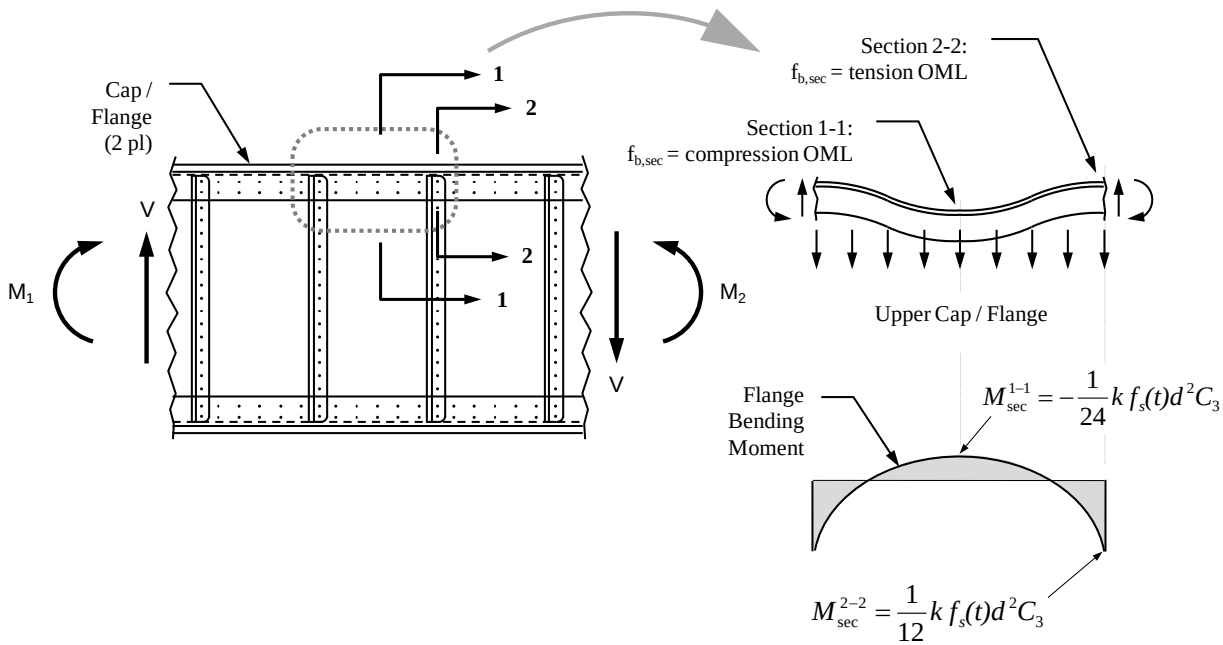

Figure 6.6.3-14: Secondary Bending Moments

The secondary flange bending stress is given by Equation 6.6.3-41. Note that this stress is identical at the beam upper and lower OML in a symmetrical beam.

$$f_{b,sec} = \frac{M_{sec}(y')}{I_{cap}}$$ **Equation 6.6.3-41**

Where:
M_{sec} is the flange secondary bending moment from Equation 6.6.3-40 (in-lb)
y′ is the distance from the cap neutral axis to the analysis location (in)
I_{cap} is the cap moment of inertia about its neutral axis, net of fastener holes (in^4)

(c) The beam secondary axial stresses are determined as follows:
The secondary compression load in the upper and lower flanges due to tension field action is described in Section 6.6.2. The secondary load is always compressive, so it adds to the primary compression load on one flange and reduces the tension load on the other. The secondary axial flange load is given by Equation 6.6.3-42.

$$P_{sec} = -\frac{kV}{2\tan\alpha}$$ **Equation 6.6.3-42**

Where:
k is the diagonal tension factor from Equation 6.6.3-5
V is the externally applied shear load (lb)
tan α is the tangent of the diagonal tension angle from Figure 6.6.3-8

Copyright 2016 Lockheed Martin Corporation.
Note: The current version is always the version on the Lockheed Martin network.

The secondary flange axial stress is given by Equation 6.6.3-43.

$$f_{a,sec} = \frac{P_{sec}}{A_{cap}} \qquad \textbf{Equation 6.6.3-43}$$

Where:
P_{sec} is the secondary axial flange load from Equation 6.6.3-42
A_{cap} is the cap cross-sectional area, net of fastener holes (in^2)

The cap cross-sectional area from Equation 6.6.3-43 must be net of fastener holes for the tension cap. Use of the net area for the compression cap is conservative with standard structural hole fits.
The total flange stress is the sum of the primary and secondary flange stresses from Items (a) through (c) using Equations 6.6.3-39, 6.6.3-41 and 6.6.3-43.

$$f_{b,tot} = f_{b,pr} + f_{b,sec} + f_{a,sec} \qquad \textbf{Equation 6.6.3-44}$$

6.6.3.4.1 Flange Compression Strength and Stability

The compression flange strength analysis is done in the same manner as the shear resistant beam, using the crippling methods described in Section 6.6.1.4. The crippling allowable stress must not exceed $F_{cu.}$

The upper flange strength margin of safety is given by Equation 6.6.3-45.

$$MS_{ult} = \frac{F_{cc}}{f_{b,tot}} - 1 \qquad \textbf{Equation 6.6.3-45}$$

Where:
F_{cc} is the section crippling stress at the desired temperature, using the methods from Section 8.4 (psi)
$f_{b,tot}$ is the total flange stress from Equation 6.6.3-44 (psi)

Because a portion of the total flange stress is local bending, ($f_{b,sec}$ from Equation 6.6.3-41), the margin given by Equation 6.6.3-45 contains some conservatism. Additional margin may be obtained through use of a plastic bending / compression interaction as described in Section 6.3.6.2. Note that the crippling strain must not be exceeded in this analysis.

If not attached to skin, the upper flange stability analysis is done in the same manner as the shear resistant beam, using the methods described in Section 6.6.1.5.

The upper flange stability margin of safety is given by Equation 6.6.3-46.

$$MS_{ult} = \frac{F_c}{f_{b,tot}} - 1 \qquad \textbf{Equation 6.6.3-46}$$

Where:
F_c is the section flange buckling stress at the desired temperature, using the methods from Section 8.4 (psi)
$f_{b,tot}$ is the total flange stress from Equation 6.6.3-44 (psi)

Because a portion of the total flange stress is local bending, ($f_{b,sec}$ from Equation 6.6.3-41), the margin given by Equation 6.6.3-45 contains some conservatism. In built-up sections, this conservatism is not usually significant.

If the compression flange is attached to skin, an inter-rivet buckling analysis is required, using the methods from Section 6.6.1.6.

6.6.3.4.2 Flange Tension Strength

The tension flange is checked using the tensile strength, F_{tu}, using section properties net of fastener holes. If the overall beam section properties reflect net flange areas, no further net section reductions are necessary.

Copyright 2016 Lockheed Martin Corporation.
Note: The current version is always the version on the Lockheed Martin network.

The lower flange tension margin of safety is given by Equation 6.6.3-47.

$$MS_{ult} = \frac{F_{tu}}{f_{b,tot}} - 1 \qquad \textbf{Equation 6.6.3-47}$$

Where:
F_{tu} is the flange tensile strength at the desired temperature (psi)
$f_{b,tot}$ is the total flange stress from Equation 6.6.3-44 (psi)

Because a portion of the total flange stress is local bending, ($f_{b,sec}$ from Equation 6.6.3-41), the margin given by Equation 6.6.3-45 contains some conservatism. Additional margin may be obtained through use of a plastic bending / tension interaction as described in Section 6.3.6.1.

Copyright 2016 Lockheed Martin Corporation.
Note: The current version is always the version on the Lockheed Martin network.

6.6.3.5 Example Calculation – Intermediate Diagonal Tension Strength Analysis, Built-Up Beam

Given:
The Ultimate loads acting on the built-up beam shown are: V= 12,000 lb, M=12,000 lb (40 in) = 480,000 in-lb.

Assume:
1. The beam is part of a fatigue and stiffness critical assembly.
2. The end bays are unbuckled at Ultimate load.
3. The beam is restrained against lateral displacement.
4. There are no shims between mating parts.
5. The longitudinal grain direction is beam spanwise for all components except the stiffeners.
6. The beam operating temperature is 160° F.
7. Ultimate load = 1.5 (Limit Load)
8. The crippling strength of the tee flange alone at 160°F is 62.881 ksi, using IDAT SM110 v1.4. Note that this value includes a 5% temperature reduction per Reference 6-5, Figure 3.7.6.1.2(a)

Determine the strength margins of safety for Bay F at Ultimate load.

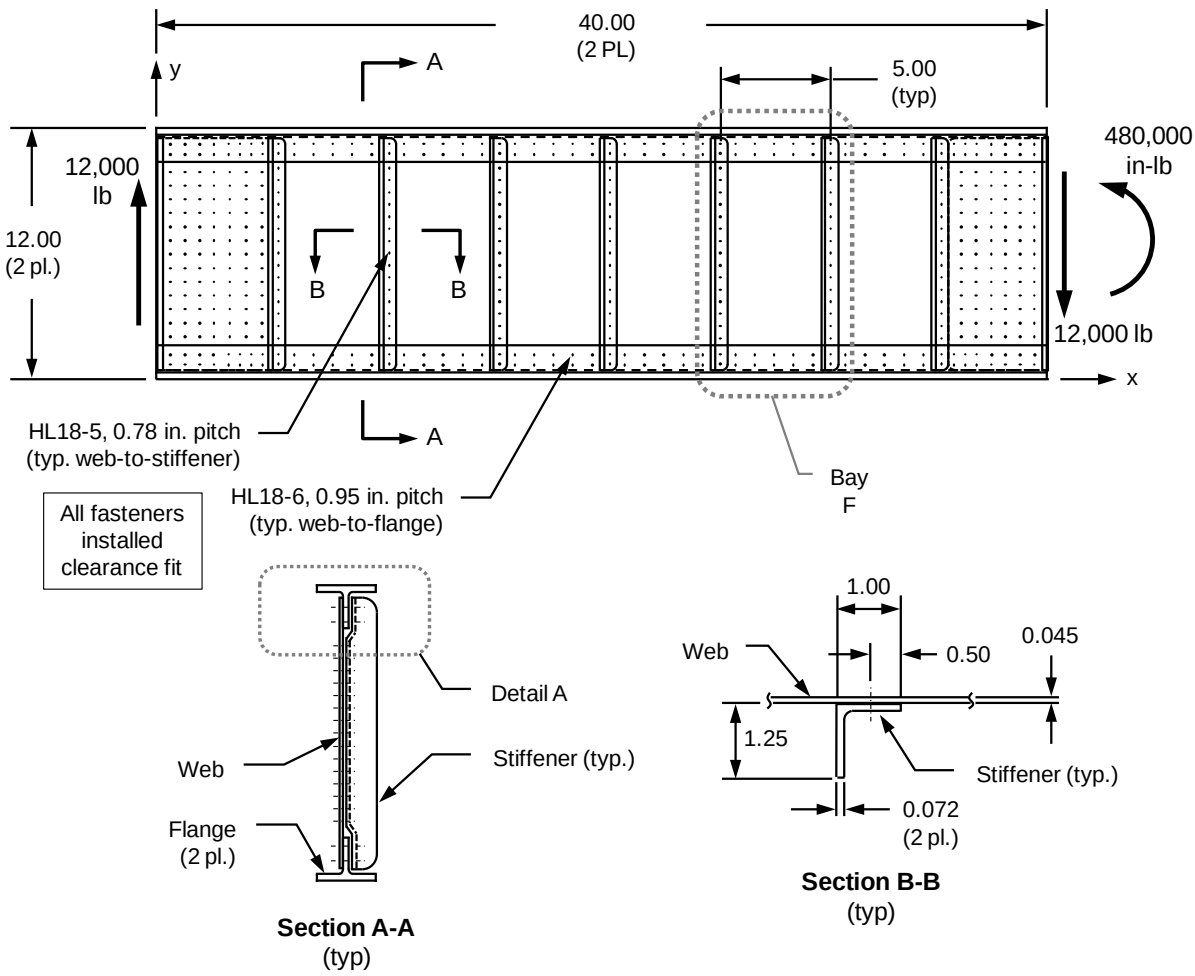

Figure 1a: Beam Configuration

Copyright 2016 Lockheed Martin Corporation.
Note: The current version is always the version on the Lockheed Martin network.

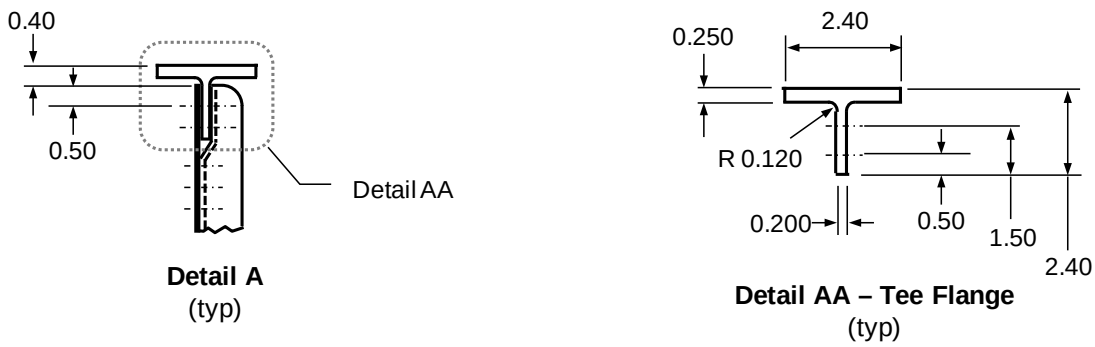

Figure 1b: Beam Configuration

Table 1a: Beam Material Properties at Room Temperature [1]

Item	Material	E_t, msi	E_c, msi	F_{tu}, ksi	F_{ty}, ksi	F_{cu}, ksi [2]	F_{cy}, ksi	F_{su}, ksi	F_{sy}, ksi [2]	F_{bru}, ksi	F_{bry}, ksi [2]	n
Tee Flanges	7075-T6511 Extrusion, 0.25-0.499 Thick, B-Basis	10.40	10.70	85.00	77.00	85.00	77.00	45.00	39.10	153.00	119.00	26
Web	7075-T6 Bare Sheet, 0.04-0.125 Thick, B-Basis	10.30	10.50	80.00	72.00	78.90	71.00	48.00	39.50	160.00	122.00	13
Stiffeners	7075-T76511 Extrusion, 0.062-0.25 Thick, B-Basis	10.40	10.70	74.00	65.00	74.00	65.00	40.00	33.50	137.00	104.00	25

Table 1b: Temperature Reduction Factors to 160° F

Temperature Reduction Factor (TRF) [1]	0.980	0.980	0.940	0.950	0.940	0.950	0.990	0.990	0.915	0.975	-
	1.4	1.4	1.1(c)	1.1(d)	1.1(c)	1.2(a)	1.2(b)	1.2(b)	1.3(a)	1.3(b)	-

Table 1c: Beam Material Properties at 160° F [3]

Item	Material	E_t, msi	E_c, msi	F_{tu}, ksi	F_{ty}, ksi	F_{cu}, ksi [2]	F_{cy}, ksi	F_{su}, ksi	F_{sy}, ksi [2]	F_{bru}, ksi	F_{bry}, ksi [2]	n
Tee Flanges	7075-T6511 Extrusion, 0.25-0.499 Thk, B-Basis	10.19	10.49	79.90	73.15	79.90	73.15	44.55	38.71	140.00	116.03	26
Web	7075-T6 Bare Sheet, 0.04-0.125 Thk, B-Basis	10.09	10.29	75.20	68.40	74.17	67.45	47.52	39.11	146.40	118.95	13
Stiffeners	7075-T76511 Extrusion, 0.062-0.25 Thk, B-Basis	10.19	10.49	69.56	61.75	69.56	61.75	39.60	33.17	125.36	101.40	25

Table 2a: Beam Fasteners - Allowable Shear Loads at Room Temperature [1]

Location	Description	P_{shr}, lb
Web-to-Flange Attachments	HL18-6, Protruding Shear Head Hi-Lok, 95 ksi Steel, 3/16	2694
Web-to-Stiffener Attachments	HL18-5, Protruding Shear Head Hi-Lok, 95 ksi Steel, 5/32	2007

Table 2b: Temperature Reduction Factor to 160° F

Temperature Reduction Factor (TRF) for AISI low-alloy steel [1]	0.99

Table 2c: Beam Fasteners - Allowable Shear Loads at 160° [4]

Location	Description	P_{shr}, lb
Web-to-Flange Attachments	HL18-6, Protruding Shear Head Hi-Lok, 95 ksi Steel, 3/16	2667
Web-to-Stiffener Attachments	HL18-5, Protruding Shear Head Hi-Lok, 95 ksi Steel, 5/32	1987

[1] Reference 6-5
[2] Calculated using IDAT METDB v3.3b
[3] Table 1c value = Room Temperature property from Table 1a multiplied by corresponding TRF from Table 1b
[4] P_{shr} from Table 2c = P_{shr} at Room Temperature from Table 2a multiplied by TRF from Table 2b

Copyright 2016 Lockheed Martin Corporation.
Note: The current version is always the version on the Lockheed Martin network.

Solution Step:

a) Determine section properties of the caps and stiffeners:

The section properties of the caps are:

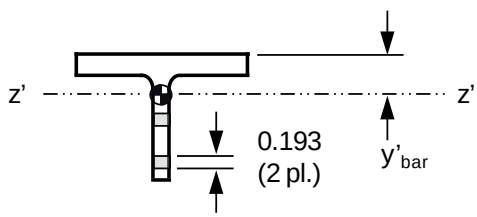

Reference: IDAT SECTION V6.3a:
y'_{bar} = 0.5633 in A_{cap} = 0.9528 in^2 I_{cap} = 0.4599 in^4 (about z′-z′ axis)

The section properties of the stiffeners are:

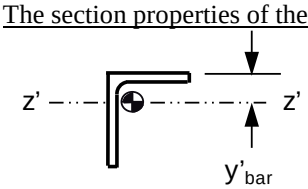

Reference: IDAT SECTION V6.3a:
y'_{bar} = 0.374 in A_u = 0.1568 in^2 I_u = 0.02505 in^4 (about z′-z′ axis)

The radius of gyration about the z′-z′ axis is:

$$\rho_u = \sqrt{\frac{I_u}{A_u}} = \sqrt{\frac{0.02505\ in^4}{0.1568\ in^2}} = 0.400$$

Note that Step (r) uses the stiffener moment of inertia with the hole area removed, which is: $I_{u,net}$=0.02363 in^4

b) Determine the beam effective height and the beam moments of inertia before and after web buckling (with and without the web):

The beam effective height (h_e) is:

$$h_e = h - 2(y'_{bar}) = 12.0\ in - 2(0.5633) = 10.873\ in$$

The beam true web height (h_w) is:

$$h_w = h - 2(0.40\ in) = 12.0\ in - 2(0.40\ in) = 11.20\ in$$

The moment of inertia calculations are based on Equation 4.2.1-8.

The beam moment of inertia before buckling includes the contributions from the caps plus web:

(Note that the subscript "*SR*" denotes "*Shear Resistant*")

$$I_{SR} = 2\left[I_{cap} + A_{cap}\left(\frac{h_e}{2}\right)^2\right] + \frac{t(h_w)^3}{12} = 2\left[0.4599\ in^4 + 0.9528 in^4\left(\frac{10.873\ in}{2}\right)^2\right] + \frac{0.045\ in\ (11.20\ in)^3}{12}$$

$$I_{SR} = 57.241\ in^4 + 5.268\ in^4 = 62.509\ in^4$$

The beam moment of inertia after buckling includes the contributions from the caps only:

(Note that the subscript "*PB*" denotes "*Post Buckled*")

Copyright 2016 Lockheed Martin Corporation.
Note: The current version is always the version on the Lockheed Martin network.

$$I_{PB} = 2\left[I_{cap} + A_{cap}\left(\frac{h_e}{2}\right)^2\right] = 2\left[0.4599\ in^4 + 0.9528 in^4\left(\frac{10.873\ in}{2}\right)^2\right] = 57.241\ in^4$$

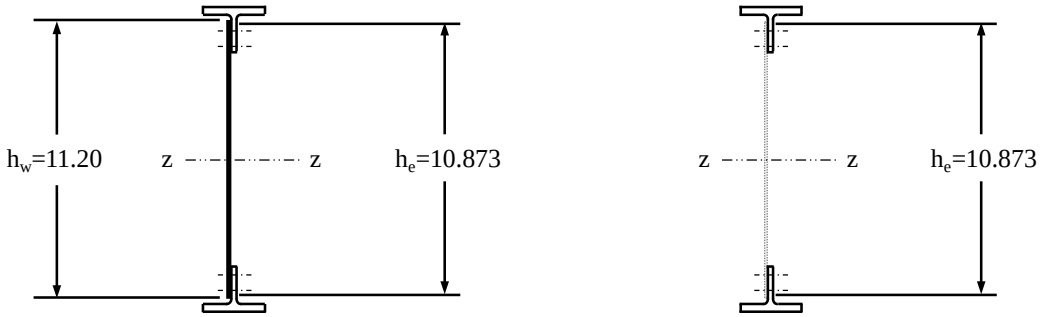

(a)
Beam Section
Including Web

I_{SR}=62.509 in^4

(b)
Beam Section
Not Including Web

I_{PB}=57.241 in^4

c) Determine the flange flexibility factor (ωd):

Using Equation 6.6.3-8, the flange flexibility factor is:

$$\omega d = 0.707d\left[\frac{t}{(I_T + I_C)h_e}\right]^{1/4}$$

Stiffener spacing: d = 5.0 in, from Figure 1a
Flange moment of inertia: $I_T = I_C = I_{cap}$ = 0.4599 in^4, Step (a)
Beam effective height: h_e = 10.873 in, from calculation above, Step (b)

$$\omega d = 0.707(5.0\ in)\left[\frac{0.045\ in}{(0.4599\ in^4 + 0.4599\ in^4)10.873\ in}\right]^{1/4} = 0.916$$

Copyright 2016 Lockheed Martin Corporation.
Note: The current version is always the version on the Lockheed Martin network.

d) Summarize the beam geometry required for analysis using the dimensions from Figures 1a /1b and the results from Step (b):

Reference Figure 6.6.3-2 for geometry definitions.

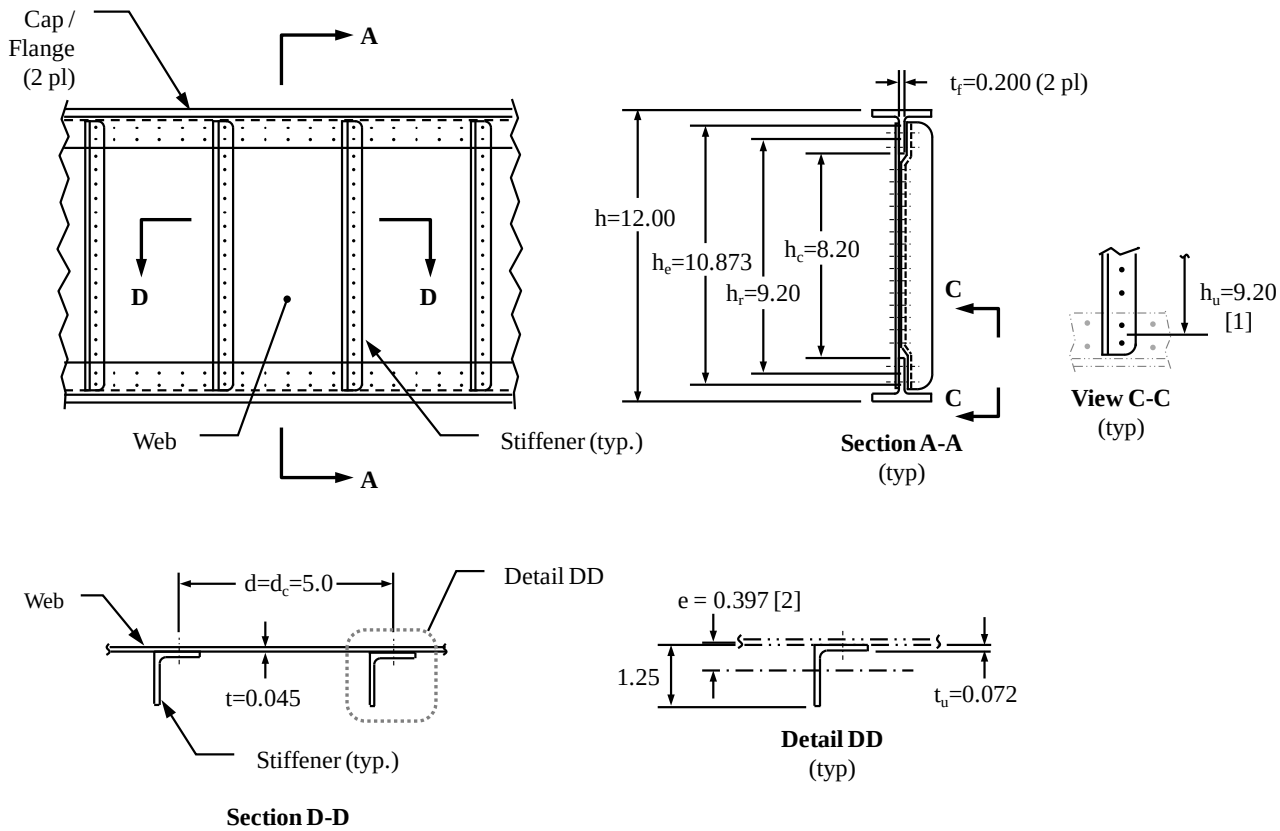

[1] In this beam configuration, $h_u = h_r$

[2] $e = \frac{t}{2} + y'_{bar} = \frac{0.045 \text{ in}}{2} + 0.374 \text{ in} = 0.397 \text{ in}$, where y'_{bar} is given in Step (a)

Copyright 2016 Lockheed Martin Corporation.
Note: The current version is always the version on the Lockheed Martin network.

e) Verify beam parameters are within the ranges specified in Table 6.6.3-1:

Item	Validity Range	Within Range? (Y/N)
$\frac{h}{t} = \frac{12.00\text{ in}}{0.045\text{ in}} = 266.7$	115 - 1000	Y
$\frac{t_u}{t} = \frac{0.072\text{ in}}{0.045\text{ in}} = 1.60$	>0.60	Y
$\frac{t_f}{t} = \frac{0.200\text{ in}}{0.045\text{ in}} = 4.44$	>1.0	Y
$\frac{d_c}{h_c} = \frac{5.00\text{ in}}{8.20\text{ in}} = 0.61$	0.20 - 1.1	Y
$\frac{t}{D_{fast}} = \frac{0.045\text{ in}}{0.156\text{ in}} = 0.29$	>0.35	Y [1]
$\frac{s_u}{D_{fast}} = \frac{0.78\text{ in}}{0.156\text{ in}} = 5.0$	3.5 - 5.0	Y
$\omega d = 0.916$, from Step (b)	<2.5	Y
N_u	$>0.22(F_{tu}^{web})(t)$ $>0.15(F_{tu}^{web})(t)$	Y Y

[1] Acceptable based on strength analysis if threaded protruding head fastener is used, per Table 6.6.3-1.

The beam parameters are within the ranges of validity to ensure accuracy in the strength analyses.

f) Determine the average shear stress acting on the web using the shear load V = 12,000 lb, and calculate the weight efficiency index as described in Section 6.6:

h_e = 10.873 in, from Step (b)

Using Equation 6.5.5-1, the average shear flow for the panel is:

$$q = \frac{V}{h_e}$$

$$q = \frac{12{,}000\ lb}{10.873\ in} = 1{,}104\ \ lb/in$$

Using Equation 6.5.5-1, the average shear stress for the panel is:

$$f_s = \frac{q}{t}$$

$$f_s = \frac{1{,}104\ lb/in}{0.045\ in} = 24{,}533\ psi$$

The beam weight efficiency index is determined using Equation 6.6-2:

$$\frac{q}{h_e} = \frac{1{,}104\ lb/in}{10.873\ in} = 101.5$$

The weight efficiency guidelines are:

$$\frac{q}{h_e} < 49,\ \text{Diagonal tension design is most weight-efficient}$$

$$\frac{q}{h_e} > 121,\ \text{Shear-resistant design is most weight-efficient}$$

Since q / h_e = 101.5 and thus between 49 and 121, diagonal tension design may or may not result in the most weight-efficient beam configuration. In an actual design, a weight trade study would be advised.

Copyright 2016 Lockheed Martin Corporation.
Note: The current version is always the version on the Lockheed Martin network.

g) Determine the buckling Ratio-To-Requirement using the average shear stress:

Calculate the initial buckling stress for Bay F:

From the Step (d) illustration, the panel dimensions are: d_c = 5.0 in, h_c = 8.2 in

Obtain the buckling coefficient using Figure 6.6.3-4(a): k_{ss} = 6.35

From the Step (e) table, t_u / t = 1.60, t_f / t = 4.44

Obtain the restraint coefficients using Figure 6.6.3-4(b): R_h = 1.15, R_d = 1.61 (use runout value)

Using Equation 6.6.3-1, for $d_c < h_c$, the elastic shear buckling stress is:

$$F_{cr,el} = k_{ss}E\left(\frac{t}{d_c}\right)^2\left[R_h + \frac{1}{2}(R_d - R_h)\left(\frac{d_c}{h_c}\right)^3\right]$$

Using the web modulus, E = 10.09 msi at 160° F, the elastic shear buckling stress is:

$$F_{cr,el} = 6.35(10.09E6\ psi)\left(\frac{0.045\ in}{5.0\ in}\right)^2\left[1.15 + \frac{1}{2}(1.61 - 1.15)\left(\frac{5.0\ in}{8.2\ in}\right)^3\right] = 6{,}239\ psi$$

The buckling stress including plasticity correction is obtained through use of Figure 6.6.3-5:

$$F_{cr} = 6{,}239\ psi$$

Using Equation 6.6.3-3, the buckling ratio is:

$$R = \frac{f_s}{F_{cr}}$$

From Step (f), the web average shear stress is: f_s=24,533 psi

$$R = \frac{24{,}533\ psi}{6{,}239\ \text{psi}} = 3.93$$

Per the problem statement, the beam is part of a fatigue / stiffness critical assembly. The buckling ratio is therefore limited to a maximum value of 5.0; using Equation 6.6.3-4, the buckling Ratio-To-Requirement is:

$$RTR_w = \frac{5.0}{R} = \frac{5.0}{3.93} = 1.27 \geq 1.0$$

RTR_w is greater than 1.0, so the buckling ratio is acceptable.

h) Determine the Diagonal Tension Factor Ratio-To-Requirement using the buckling ratio from Step (g):

From Step (g):

$$\frac{f_s}{F_{cr}} = 3.93$$

Using Equation 6.6.3-5, the diagonal tension factor, k is:

$$k = \tanh\left[0.5\ log_{10}\frac{f_s}{F_{cr}}\right] = \tanh[0.5\ log_{10}(3.93)] = 0.29$$

For reference, this means that 29% of the applied shear load is carried by diagonal tension and 71% is carried by the shear-resistant panel. Note that the diagonal tension factor may alternatively be obtained using Figure 6.6.3-6.

Allowable diagonal tension factor:

Using Equation 6.6.3-6, the maximum permissible diagonal tension factor for the 0.045 in web is:

Copyright 2016 Lockheed Martin Corporation.
Note: The current version is always the version on the Lockheed Martin network.

$$k_{all} = 0.78 - \sqrt{t - 0.012} = 0.78 - \sqrt{0.045 - 0.012} = 0.598$$

Using Equation 6.6.3-7, the diagonal tension Ratio-To-Requirement is:

$$RTR_k = \frac{k_{all}}{k} = \frac{0.598}{0.29} = 2.06 > 1.0$$

RTR_k is greater than 1.0, so the diagonal tension factor is acceptable.

i) Determine the average stiffener compression stress:

From Step (a), the stiffener section properties are:

$A_u = 0.1568\ in^2$ $I_u = 0.02505\ in^4$ $\rho_u = 0.400\ in$

From the Step (d) illustration, the eccentricity from web mid plane to section neutral axis is:

e=0.397 in

Using Equation 6.6.3-9, the effective stiffener area, $A_{u,e}$ for a single-sided stiffener is:

$$A_{u,e} = \frac{A_u}{1 + \left(\frac{e}{\rho_u}\right)^2} = \frac{0.1568\ in^2}{1 + \left(\frac{0.397\ in}{0.400\ in}\right)^2} = 0.0790\ in^2$$

From the Step (d) illustration, d=5.0 in and t=0.045 in, so the parameter $A_{u,e}$ / d t is:

$$\frac{A_{u,e}}{d\ t} = \frac{0.0790\ in^2}{5.0\ in(0.045\ in)} = 0.351$$

Using k=0.29 from Step (h), the ratio of stiffener compression stress to web shear stress from Figure 6.6.3-7 is:

$$\frac{f_u}{f_s} = 0.37$$

From Step (f), the web shear stress is: f_s=24,533 psi. The average stiffener compression stress is then:

$$f_u = 0.37(24{,}533\ psi)(-1) = -9{,}077\ psi$$

This is the average compression stress over the length of the stiffener and applies only at the web mid-plane. The compression stress decreases (or becomes tensile) at the stiffener free edge.

j) Determine the maximum stiffener compression stress:

From the Step (d) illustration, the applicable panel dimensions are:

d=5.0 in h_u=9.2 in

$$\frac{d}{h_u} = \frac{5.0\ in}{9.2\ in} = 0.543$$

Using k=0.29 from Step (h), the ratio of maximum stiffener stress to average stiffener stress from Figure 6.6.3-12 is:

$$\frac{f_{u,max}}{f_u} = 1.3$$

From Step (i), the average stiffener compression stress is: f_u= - 9,077 psi. Using Equation 6.6.3-20, the maximum stiffener compression stress is then:

$$f_{u,max} = \frac{f_{u,max}}{f_u} \times f_u = 1.3(-9{,}077\ psi) = -11{,}800\ psi$$

This is the maximum compression stress in the stiffener, which occurs at the neutral axis of the beam and decrease with distance from the neutral axis. This stress occurs when the web has just buckled and applies only at the web mid-plane.

Copyright 2016 Lockheed Martin Corporation.
Note: The current version is always the version on the Lockheed Martin network.

k) Determine the intermediate diagonal tension angle (α):

From Step (i), the ratio of average stiffener stress to web shear stress is:

$$\frac{f_u}{f_s} = 0.37$$

From Step (h), the diagonal tension factor is:

$$k = 0.29$$

Using Figure 6.6.3-8, the tangent of the intermediate diagonal tension angle is:

$$\tan\alpha = 0.895$$

The intermediate diagonal tension angle is:

$$\arctan\alpha = \arctan(0.895) = 41.8°$$

Note that this angle is used in later steps.

l) Determine the peak web shear stress ($f_{s,max}$):

Determine web stress peaking factors C_1 and C_2:

From Step (k), tan α = 0.895.

Using Figure 6.6.3-9, the angle factor C_1=0.006

From Step (c), the Flange Flexibility Factor, ωd = 0.916.

Using Figure 6.6.3-10, the web stress concentration factor C_2=0.0.

From Step (f), the web shear stress is: f_s=24,533 psi

From Step (h), the diagonal tension factor is: k=0.29

Using Equation 6.6.3-10, the peak web shear stress is:

$$f_{s,max} = f_s(1 + k^2C_1)(1 + kC_2) = 24{,}533\ psi(1 + 0.29^2 \times 0.006)(1 + 0.29 \times 0.0)$$

$$f_{s,max} = 24{,}545\ psi$$

m) Determine the allowable web shear stress ($F_{s,all}$):

From Step (h), the diagonal tension factor is: k=0.29

Using Figure 6.6.3-11(b) with α_{PDT} = 45°, the *basic* allowable web shear stress is:

$$F^*_{all} = 29.2\ ksi$$

The basic allowable shear stress is modified to account for fastener type and web material strength as described in Section 6.6.3.1.3.

Fastener Factor (FF): From Figure 1a, the fasteners are installed in clearance fit holes. From Table 6.6.3-6, FF=1.0

Material Factor (MF):

From Table 1c, F_{tu}=75.2 ksi at 160° for 7075-T6 Bare sheet

Using Equation 6.6.3-12(b), the Material Factor is:

$$MF_{7000} = \frac{F_{tu}}{72.0\ ksi} = \frac{75.2\ ksi}{72.0\ ksi} = 1.04$$

Shear Reduction Factor (SR):

From Table 6.6.3-7, web is sheet metal, RS=1.0

Using Equation 6.6.3-11, the web allowable shear stress is:

$$F_{all} = FF \times MF \times RS \times F^*_{all} = 1.0 \times 1.04 \times 1.0 \times 29.2\ ksi = 30.37\ ksi$$

Copyright 2016 Lockheed Martin Corporation.
Note: The current version is always the version on the Lockheed Martin network.

n) Determine the web strength margin of safety using the peak shear stress, $f_{s,max}$, from Step (l) and the allowable shear stress, $F_{s,all}$, from Step (m):

Using Equation 6.6.3-13, the web strength margin of safety is:

$$MS_{ult} = \frac{F_{s,all}}{f_{s,max}} = \frac{30{,}370\ psi}{24{,}545\ psi} - 1 = +0.24$$

As described in Section 6.6.3.1.3, the margin is applicable at the web-to-cap (flange) attachment line and includes the net section effect.

o) Determine the stiffener compression load due to beam curvature

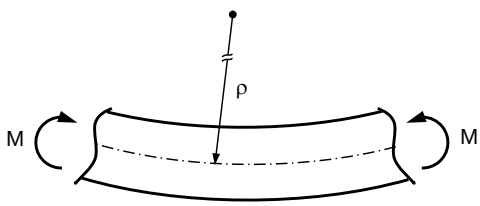

The radius of curvature in bending is approximated through use of Equation 6.2.5-18 (beam deflection equation):

$$\frac{1}{\rho} = \frac{M}{EI}$$

$M = V\,x = 12{,}000\ lb(30.0\ in) = 360{,}000\ in\text{-}lb$, maximum for Bay F

The cap modulus from Table 1c is: E=10.19 msi
The beam moment of inertia from Step (b) is: I_{PB} = 57.241 in^4
The beam radius of curvature is:

$$\rho = \frac{EI}{M} = \frac{10.19E6\ psi\ (57.241\ in^4)}{360{,}000\ in\text{-}lb} = 1{,}620\ in$$

The average web running load, at the neutral axis is:

$w = \frac{P_{cap}}{\rho}$, (Equation 6.2.5-15,-16), where $P_{cap} = \frac{M}{h_e}$

$h_e = 10.873\ in$, from the Step (b) illustration

$$w = \frac{M}{h_e\,\rho} = \frac{360{,}000\ in\text{-}lb}{10.873\ in\ (1{,}620\ in)} = -20\ \frac{lb}{in}$$

The total load for Bay F (5 in width) is:

$$W = -20\ \frac{lb}{in}(5.0\ in) = -100\ lb$$

In diagonal tension beams, the crushing loads due to curvature are assumed to be carried by the stiffeners only**.** This load is shared between the stiffener and the effective width of unbuckled, attached web. For simplicity it is assumed to act on the stiffener alone.

Copyright 2016 Lockheed Martin Corporation.
Note: The current version is always the version on the Lockheed Martin network.

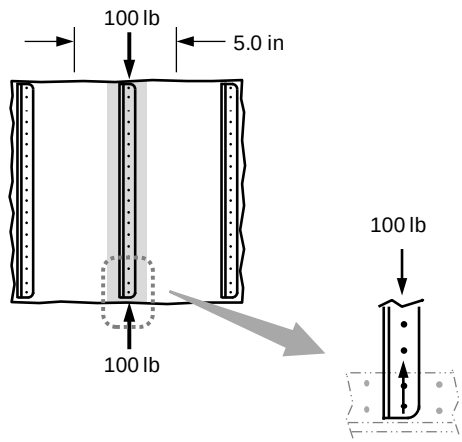

From Step (a), the stiffener area is: $A_u = 0.1568\ in^2$
The stiffener compression stress due to curvature is:

$$f_{u,r} = \frac{W}{A_u} = \frac{-100\ lb}{0.1568\ in^2} = -638\ psi$$

Although not a significant contributor to the total stiffener compressive stress, $f_{u,r}$ is included in the stiffener strength analysis in Steps (p), (q), (s), and (u). This is done to illustrate the procedure.

p) Determine the stiffener margins of safety for compression yield and column buckling:

The total stiffener compression stress is the average compression stress in the stiffener, f_u, plus the compression stress due to curvature, $f_{u,r}$:
From Step (i): f_u= -9,077 psi; from Step (o): $f_{u,r}$= -638 psi
The average total stiffener compression stress is:

$$f_{u,tot} = f_u + f_{u,r} = -9{,}077\ psi - 638\ psi = -9{,}715\ psi$$

Reference Sections 6.6.3.2.1 and 6.6.3.2.2, the yield and column checks required for a single-sided stiffener are:

1. $f_{u,tot}$ must remain below the stiffener compressive yield stress, F_{cy}
2. $f_{u,tot}$ must remain below the column buckling stress, calculated using a slenderness ratio of $h_u/(2\rho_u)$

<u>Compression Yield Check</u>:
From Table 1c, the stiffener compression yield stress is: F_{cy}=61,750 psi
Using Equation 6.6.3-16, the margin of safety for compression yield is:

$$MS_{ult} = \frac{F_{cy}}{f_{u,tot}} = \frac{61{,}750\ psi}{9{,}715\ psi} - 1 = +5.36$$

<u>Column Check</u>:
From the Step (d) illustration, the stiffener height is: h_u = 9.20 in
From Step (a) ρ_u=0.400 in
Using Equation 6.6.3-18, the effective length is:

$$L_e = \frac{h_u}{2} = \frac{9.20\ in}{2} = 4.60\ in$$

The stiffener slenderness ratio is:

Copyright 2016 Lockheed Martin Corporation.
Note: The current version is always the version on the Lockheed Martin network.

$$\frac{L_e}{\rho_u} = \frac{4.60\ in}{0.400\ in} = 11.50$$

The column curve is generated using IDAT SM83 (v1.0), whose output is as shown:

Open Section Column Analysis V1.0

```
Material(s):
1) 247 L
   7075-T76511 EXT | <20IN2 .062-.25 | B BASIS | No Spec
   FTU=  74.0 ksi   FCY=  65.0 ksi   EC=10700.   RONC= 25.0   FCMAX=  67.3 ksi
```

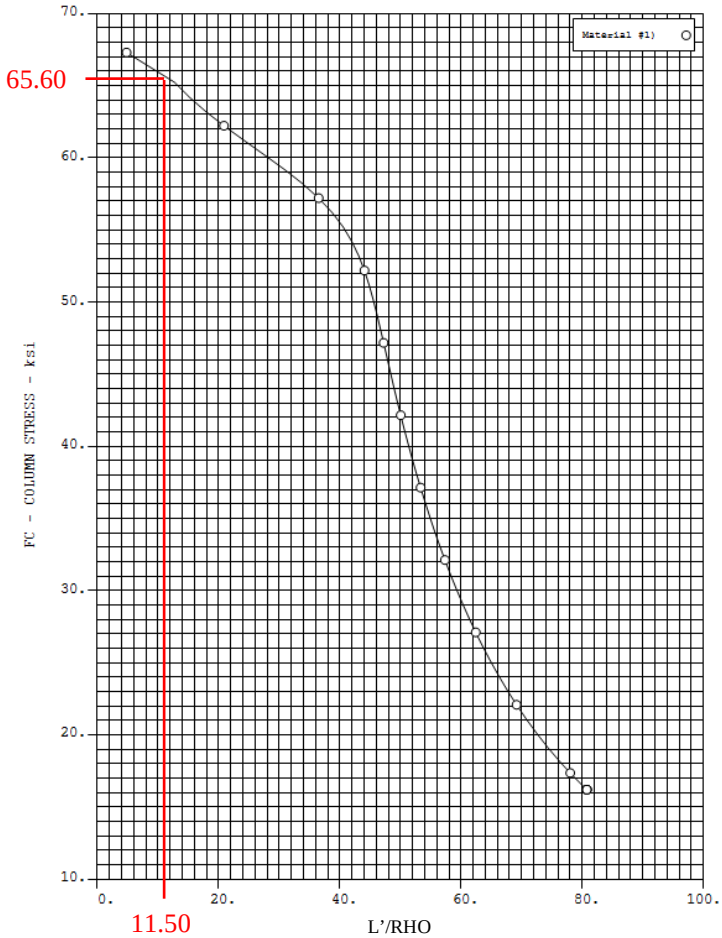

From the column curve the allowable stress is 65.6 ksi. Correcting for 160° temperature, a reduction factor of 0.98 is used from Table 1b, based on compression moduli:

$$F_{col} = 0.98\ (65.6\ ksi) = 64.29\ ksi$$

Using Equation 6.6.3-19, the margin of safety for column buckling is:

$$MS_{ult} = \frac{F_{col}}{f_{u,tot}} = \frac{64{,}290\ psi}{9{,}715\ psi} - 1 = +5.62$$

q) Determine the stiffener margin of safety for forced crippling:

The maximum total stiffener compression stress is the maximum compression stress in the stiffener, $f_{u,max}$, plus the compression stress due to curvature, $f_{u,r}$.:

Copyright 2016 Lockheed Martin Corporation.
Note: The current version is always the version on the Lockheed Martin network.

From Step (j): $f_{u,max}$= -11,800 psi; from Step (o): $f_{u,r}$= -638 psi

The maximum total stiffener compression stress is:

$$f_{u,\max(tot)} = f_{u,max} + f_{u,r} = -11{,}800\ psi - 638\ psi = -12{,}438\ psi$$

Using Equations 6.3.3-21(a) and 6.3.3-21(c), the elastic forced crippling allowable stress for a single-sided stiffener is:

$$F_{o,e} = \frac{E_u}{(b/t)_e^2}$$

$$(b/t)_e = \frac{5.00}{\left(F_{cy,u}/E_u\right)^{1/4} k^{1/3}(t_u/t)^{1/6}}$$

From Table 1c: $F_{cy,u}$ = 61.750 ksi, E_u = 10.490 msi

From Step (h), the Diagonal Tension Factor is: k = 0.29

From Step (h), the ratio of stiffener to web thicknesses is: t_u / t = 1.60

$$(b/t)_e = \frac{5.00}{(61.750\ ksi/10{,}490\ ksi)^{1/4} \times 0.29^{1/3} \times (1.60)^{1/6}} = 25.217$$

The elastic forced crippling allowable stress is:

$$F_{o,e} = \frac{E_u}{(b/t)_e^2} = \frac{10{,}490\ ksi}{(25.217)^2} = 16.496\ ksi$$

Note that $F_{o,e}$ is at elevated temperature. Since this stress is below the stiffener proportional limit stress, no plasticity correction is required; $F_{o,e} = F_{o,pl}$.

Using Equation 6.6.3-23, the forced crippling margin of safety is:

$$MS_{ult} = \frac{F_{o,pl}}{f_{u,\max(tot)}} = \frac{16{,}496\ psi}{12{,}438\ psi} - 1 = +0.33$$

r) Determine the required minimum moment of inertia for the stiffeners:

The procedure to determine the required moment of inertia is given in Section 6.6.1.10.

$k_{ss} = 6.35$, from Step (g)

$h = panel\ height = 9.2\ in\ (between\ attachment\ mid\text{-}lines)$

$d = panel\ width = 5.0\ in$

$t = web\ thickness = 0.045\ in$

The minimum required inertia for the stiffener is obtained using Equation 6.6.1-2:

$$\frac{I_{stiffener}}{d\,t^3} = \frac{0.0217}{\left(\frac{d}{h\sqrt{k_{ss}}}\right)^{8/3}} = \frac{0.0217}{\left(\frac{5.0\text{ in}}{9.2\text{ in}\sqrt{6.35}}\right)^{8/3}} = 1.297$$

$$I_{stiffener} = 1.297(d)(t)^3\left(\frac{E_t(RT)}{E_t(160°F)}\right) = 1.297(5.0\text{ in})(0.045\text{ in})^3\left(\frac{10.4\text{ msi}}{10.19\text{ msi}}\right) = 0.000603\text{ in}^4$$

From Step (a), the stiffener net moment of inertia about the centroidal axis parallel to the web is 0.02363 in^4, which exceeds the required value. Note that the 0.072 in stiffener thickness meets the minimum requirements from Table 6.6.1-2.

Copyright 2016 Lockheed Martin Corporation.
Note: The current version is always the version on the Lockheed Martin network.

s) Determine the inter-rivet buckling margin of safety for the web at the stiffener attachment
(From Section 6.6.3.2.5, this is required due to the single-sided stiffeners)

From Step (p), the maximum total stiffener compression stress is used: $f_{u,max(tot)}$ = -12,438 psi
From Table 1c, the web compression modulus is: E_c = 10.29 msi
From Figure 1a, the web-to-stiffener fastener spacing is: s_u=0.78 in
From Figure 1a, the web thickness is: t=0.045 in
Using Equation 8.6.1-6, the slenderness ratio is:

$$\frac{L'}{\rho} = 1.732\frac{s_u}{t} = 1.732\frac{0.78\ in}{0.045\ in} = 30.0$$

The column curve is generated using IDAT SM83 (v1.0), whose output is shown below:

Open Section Column Analysis V1.0

```
Material(s):
1)   40 T
   7075-T6 BARE SHEET | .040-.125 | B BASIS | No Spec
   FTU=  80.0 ksi   FCY=  74.0 ksi   EC=10500.   RONC= 12.0   FCMAX=  80.0 ksi
```

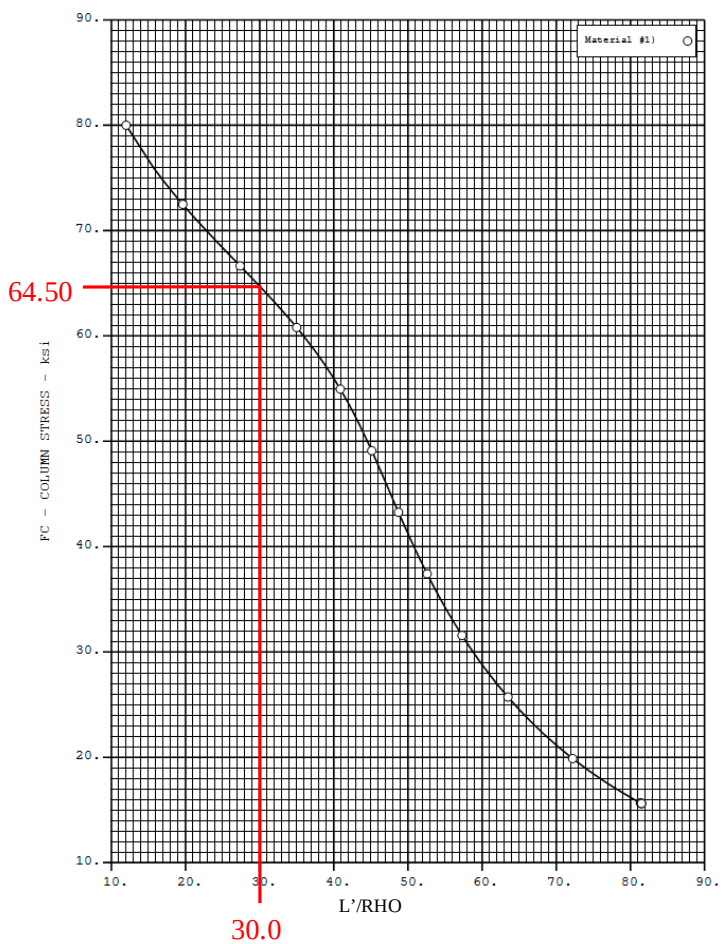

From the column curve the allowable stress is 64.5 ksi. Correcting for 160° temperature, a reduction factor of 0.98 is used from Table 1b, based on compression moduli:

Copyright 2016 Lockheed Martin Corporation.
Note: The current version is always the version on the Lockheed Martin network.

$F_{ir} = 0.98\ (64.5\ ksi) = 63.21\ ksi$

Using Equation 6.6.3-24, the margin of safety for web inter-rivet buckling at the stiffener attachment is:

$$MS_{ult} = \frac{F_{ir(160°F)}}{f_{u,\max(tot)}} - 1 = \frac{63{,}210\ psi}{12{,}438\ psi} - 1 = +4.08$$

t) Stiffener Beam-Column Check:

Per Section 6.6.3.2.6, the beam-column check is not required, as there is no lateral pressure acting on the beam.

u) Determine the joint margin of safety for the web-to-flange attachments:

Using Equation 6.6.3-25, the resultant shear flow for the web-to-flange attachments is:

$$q_r = \frac{V}{h_r}(1 + 0.414\ k)$$

From the problem statement, the externally applied shear load is: V=12,000 lb
From the Step d illustration, the height between fastener rows is: h_r = 9.20 in
From Step (h), the Diagonal Tension Factor is: k = 0.29

$$q_r = \frac{12{,}000\ lb}{9.20\ in}(1 + 0.414\ \times 0.29) = 1{,}461\ lb/in$$

The load per fastener is:

$$P_{fast} = \frac{q_r(pitch)}{2\ rows} = \frac{1{,}461\ lb/in(0.95\ in)}{2\ rows} = 694\ lb/fastener$$

From Figure 1a, the web-to-flange fasteners are HL18-6 Hi-Loks. The web is more critical than the flange in bearing. From Tables 1c and 2c:

Web, 7075-T6 sheet: F_{bru} = 146.4 ksi

HL18-6 : P_{shr} = 2,667 lb at 160°F

Reference Table 3.3.3-3, k_{wpb} = 0.82

The allowable web bearing load is:

$P_{bru} = k_{wpb}\ F_{bru} d\ t =$ 0.82(146,400 psi)(0.190 in)(0.045 in) = 1,026 lb

The joint is critical in bearing; using Equation 6.6.3-27, the margin of safety at the web-to-flange joint is:

$$MS_{ult} = \frac{P_{bru}}{P} - 1 = \frac{1{,}026\ lb}{694\ lb} - 1 = +0.48$$

v) Determine the joint margin of safety for the stiffener-to-flange attachments:

Using Equation 6.6.3-28(b), the load acting at the upper and lower ends of a single-sided stiffener is:

$$P_u = f_u A_{u,e}$$

From Step (i), the average stiffener compressive stress is: f_u=-9,077 psi
From Step (i), the effective stiffener area is: $A_{u,e}$=0.0790 in^2

$$P_u = -9{,}077\ psi(0.0790\ in^2) = -717\ lb$$

This load is combined with the compression load due to curvature from Step (o): W = -100 lb
The total load acting at the stiffener termination is:

$$P_{u,tot} = P_u + W = -717\ lb - 100\ lb = -817\ lb$$

Copyright 2016 Lockheed Martin Corporation.
Note: The current version is always the version on the Lockheed Martin network.

The fastener shear load is obtained using Equation 6.6.3-29. There are two stiffener-to-flange fasteners at each end.

$$P_{shr} = \frac{P_u}{n} = \frac{817\ lb}{2} = 409\ lb$$

From Figure 1a, the stiffener-to-flange fasteners are HL18-6 Hi-Loks. The stiffener is more critical than the flange in bearing.
From Tables 1c and 2c:

Stiffener, 7075-T76511 Extrusion: F_{bru} = 125.36 ksi
HL18-6 : P_{shr} = 2,667 lb at 160°F
Reference Table 3.3.3-3, k_{wpb} = 0.82

The allowable stiffener bearing load is:

$$P_{bru} = k_{wpb}\ F_{bru} d\ t = 0.82(125{,}360\ \text{psi})(0.190\ \text{in})(0.072\ \text{in}) = 1{,}406\ \text{lb}$$

The joint is critical in bearing; using Equation 6.6.3-30, the margin of safety at the stiffener-to-flange joint is:

$$MS_{ult} = \frac{P_{bru}}{P} - 1 = \frac{1{,}406\ lb}{409\ lb} - 1 = +2.43$$

w) Determine the shear strength margin of safety for the stiffener-to-web attachments:
Per Section 6.6.3.3.3, this check is not required for single-sided stiffeners.

x) Determine the tensile strength margin of safety for the stiffener-to-web attachments:
Using Equation 6.6.3-33(b), the required web pull-off strength for a single-sided stiffener attachment is:

$$N_u = 0.22\ t\ F_{tu}$$

From Figure 1a, the web thickness is: t=0.045 in
From Table 1c, the web ultimate tensile strength at 160°F is: F_{tu}=75.2 ksi

$$N_u = 0.22(0.045\ in)(75{,}200\ psi) = 744\ lb/in$$

From Figure 1a, the web-to-stiffener fastener spacing is: s_u=0.78 in
Using Equation 6.6.3-34, the required tensile strength per attachment is:

$$P_u = N_u\ s_u = 744\ lb/in(0.78\ in) = 581\ lb/attachment$$

The allowable joint tensile strength is the lower of the fastener tensile and web pull-through strengths.

<u>Bolt tensile strength:</u> From Figure 1a, the web-to-stiffener fasteners are HL18-5 Hi-Loks; from Reference 6-5, the bolt tensile strength is 1,940 lb.
From Table 2c, the temperature reduction factor is: TRF=0.99
The bolt tensile strength at 160°F is:

$$P_{t,all} = 0.99(1{,}940\ lb) = 1{,}921\ lb$$

<u>Web pull through strength:</u> There are no published pull-through data for this joint configuration. The pull-through strength is approximated using Equation 6.6.3-35:

$$P_{pt} = F_{su}\ t\ \pi\ d_h$$

From Table 1c, the web ultimate shear strength at 160°F is: F_{su}=47.52 ksi
From Figure 1a, the web thickness is: t=0.045 in
From Reference 6-5, the bolt head diameter is: d_h = 0.242 in

$$P_{pt} = 47{,}520\ psi(0.045\ in)\pi(0.242\ in) = 1{,}626\ lb$$

The web pull-through strength is critical and establishes the joint tensile strength. Using Equation 6.6.3-36, the joint tensile strength margin of safety is:

$$MS_{ult} = \frac{P_{pt}}{P_u} - 1 = \frac{1{,}626\ lb}{581\ lb} - 1 = 1.80$$

Copyright 2016 Lockheed Martin Corporation.
Note: The current version is always the version on the Lockheed Martin network.

y) Determine the primary bending stresses in the flanges:

Stresses are calculated at Sections A-A and E-E in Bay F:

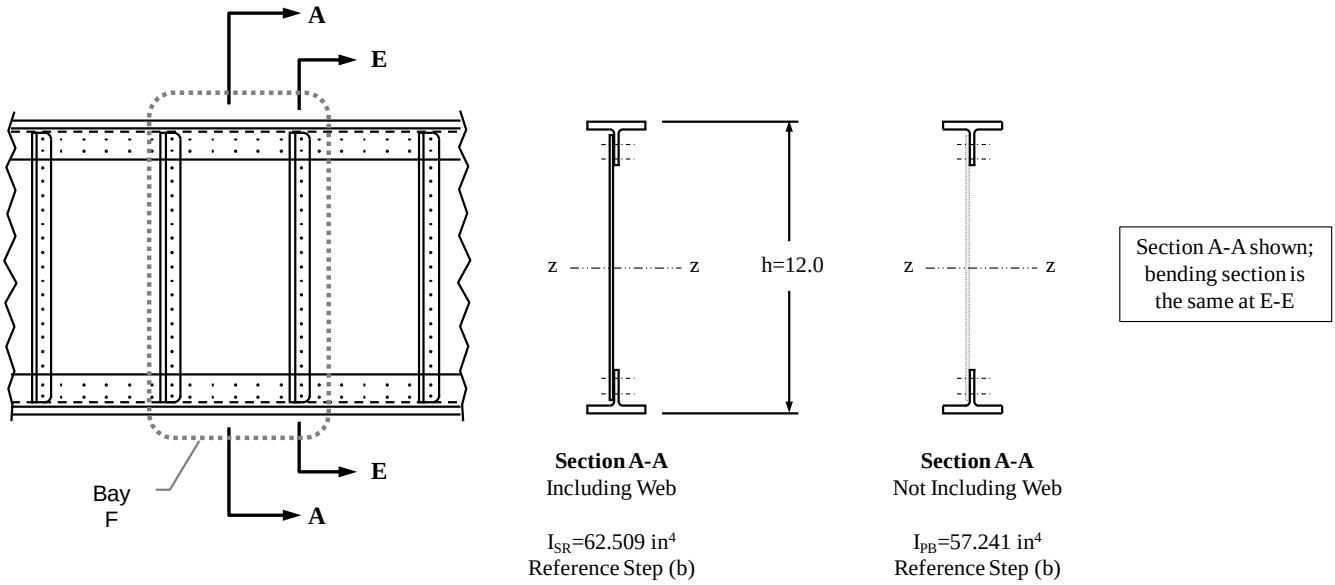

From the problem statement, the externally applied shear load is: V=12,000 lb. The maximum bending moments acting at Sections A-A and E-E are:

Section A-A, x=27.5 in:

$$M_{A-A} = V(x) = 12{,}000\ lb(27.5\ in) = 330{,}000\ in\text{-}lb$$

Section E-E, x=30.0 in:

$$M_{E-E} = V(x) = 12{,}000\ lb(30\ in) = 360{,}000\ in\text{-}lb$$

<u>Flange primary bending stresses as a shear resistant beam:</u>

The bending moment at the point of web buckling is the portion carried as a shear resistant beam, calculated using Equation 6.6.3-37(a):

$$M_{SR} = M(1-k)$$

From Step (h), the Diagonal Tension Factor is: k = 0.29:

$$M_{SR}^{A-A} = 330{,}000\ in\text{-}lb(1-0.29) = 234{,}300\ in\text{-}lb$$
$$M_{SR}^{E-E} = 360{,}000\ in\text{-}lb(1-0.29) = 255{,}600\ in\text{-}lb$$

The bending stress as a shear resistant beam is calculated using Equation 6.6.3-38(a):

$$f_{b,SR} = \frac{M_{SR}(h/2)}{I_{SR}}$$

From the Step (d) illustration, the beam OML height is: h=12.0 in

From the Step (b), the beam moment of inertia including the web is: I_{SR} = 62.509 in^4

$$f_{b,SR}^{A-A} = \frac{234{,}300\ in\text{-}lb(12.0\ in/2)}{62.509\ in^4} = \pm 22{,}490\ psi$$

$$f_{b,SR}^{E-E} = \frac{255{,}600\ in\text{-}lb(12.0\ in/2)}{62.509\ in^4} = \pm 24{,}534\ psi$$

Copyright 2016 Lockheed Martin Corporation.
Note: The current version is always the version on the Lockheed Martin network.

Flange primary bending stresses as a post-buckled beam:

The bending moment beyond the point of web buckling is the portion carried as a post-buckled beam, calculated using Equation 6.6.3-37(b):

$$M_{PB} = M(k)$$

From Step (h), the Diagonal Tension Factor is: k = 0.29:

$$M_{PB}^{A-A} = 330{,}000\ in\text{-}lb(0.29) = 95{,}700\ in\text{-}lb$$
$$M_{PB}^{E-E} = 360{,}000\ in\text{-}lb(0.29) = 104{,}400\ in\text{-}lb$$

The bending stress as a post-buckled beam is calculated using Equation 6.6.3-38(b):

$$f_{b,PB} = \frac{M_{PB}(h/2)}{I_{PB}}$$

From the Step (d) illustration, the beam OML height is: h=12.0 in

From the Step (b), the beam moment of inertia not including the web is: I_{PB} = 57.241 in^4

$$f_{b,PB}^{A-A} = \frac{95{,}700\ in\text{-}lb(12.0\ in/2)}{57.241\ in^4} = \pm 10{,}031\ psi$$

$$f_{b,PB}^{E-E} = \frac{104{,}400\ in\text{-}lb(12.0\ in/2)}{57.241\ in^4} = \pm 10{,}943\ psi$$

Total flange primary bending stresses:

The primary flange bending stresses at the beam OML are the sums of the shear resistant and post-buckled flange bending stresses. The primary bending stress is calculated using Equation 6.6.3-39:

$$f_{b,pr} = f_{b,SR} + f_{b,PB}$$

At the upper surface OML:

$$f_{b,pr}^{A-A} = -22{,}490\ psi - 10{,}031\ psi = -32{,}521\ psi$$

$$f_{b,pr}^{E-E} = -24{,}534\ psi - 10{,}943\ psi = -35{,}477\ psi$$

At the lower surface OML:

$$f_{b,pr}^{A-A} = 22{,}490\ psi + 10{,}031\ psi = 32{,}521\ psi$$

$$f_{b,pr}^{E-E} = 24{,}534\ psi + 10{,}943\ psi = 35{,}477\ psi$$

The primary bending stresses are as shown:

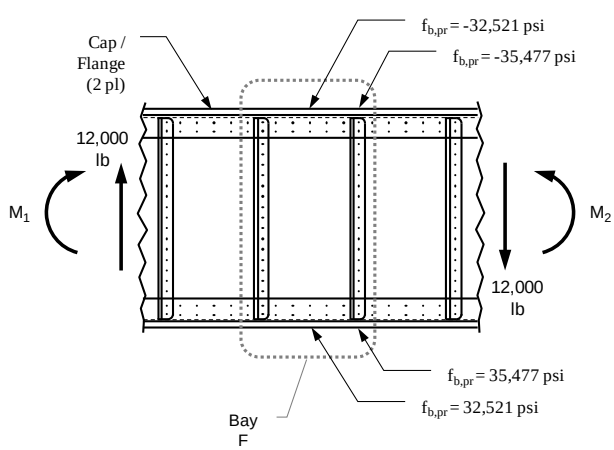

Copyright 2016 Lockheed Martin Corporation.
Note: The current version is always the version on the Lockheed Martin network.

z) Determine the secondary bending stresses in the flanges:

Using Equation 6.6.3-40(a), the secondary bending moment acting on the flange at the center of the bay (Section A-A) is:

$$M_{sec}^{A-A} = -\frac{1}{24}\, k\, f_s\, t\, d^2 C_3$$

Using Equation 6.6.3-40(b), the secondary bending moment acting on the flange at the end of the bay (Section E-E) is:

$$M_{sec}^{E-E} = \frac{1}{12}\, k\, f_s\, t\, d^2 C_3$$

From Step (h), the Diagonal Tension Factor is: k = 0.29
From Step (f), the web shear stress is: f_s = 24,533 psi
From Figure 1a, the web thickness is: t=0.045 in
From Figure 1a, the bay width is: d=5.0 in
From Step(c), the Flange Flexibility Factor is: ωd=0.916. Using Figure 6.6.3-10, the stress concentration factor C_3=1.0.

$$M_{sec}^{A-A} = -\frac{1}{24}\,(0.29)(24{,}533\ psi)(0.045\ in)(5.0\ in)^2(1.0) = -333\ in\text{-}lb$$

$$M_{sec}^{E-E} = \frac{1}{12}\,(0.29)(24{,}533\ psi)(0.045\ in)(5.0\ in)^2(1.0) = 667\ in\text{-}lb$$

The secondary bending stress at the flange OML is calculated using Equation 6.6.3-41:

$$f_{b,sec} = \frac{M_{sec}(y'_{bar})}{I_{cap}}$$

From Step (a), y'_{bar}=0.5633 in, I_{cap}=0.4599 in^4

$$f_{b,sec}^{A-A} = \frac{-333\ in\text{-}lb(0.5633\ in)}{0.4599\ in^4} = -408\ psi$$

$$f_{b,sec}^{E-E} = \frac{667\ in\text{-}lb(0.5633\ in)}{0.4599\ in^4} = 817\ psi$$

Note that this stress is the same at the beam upper and lower OML are as shown:

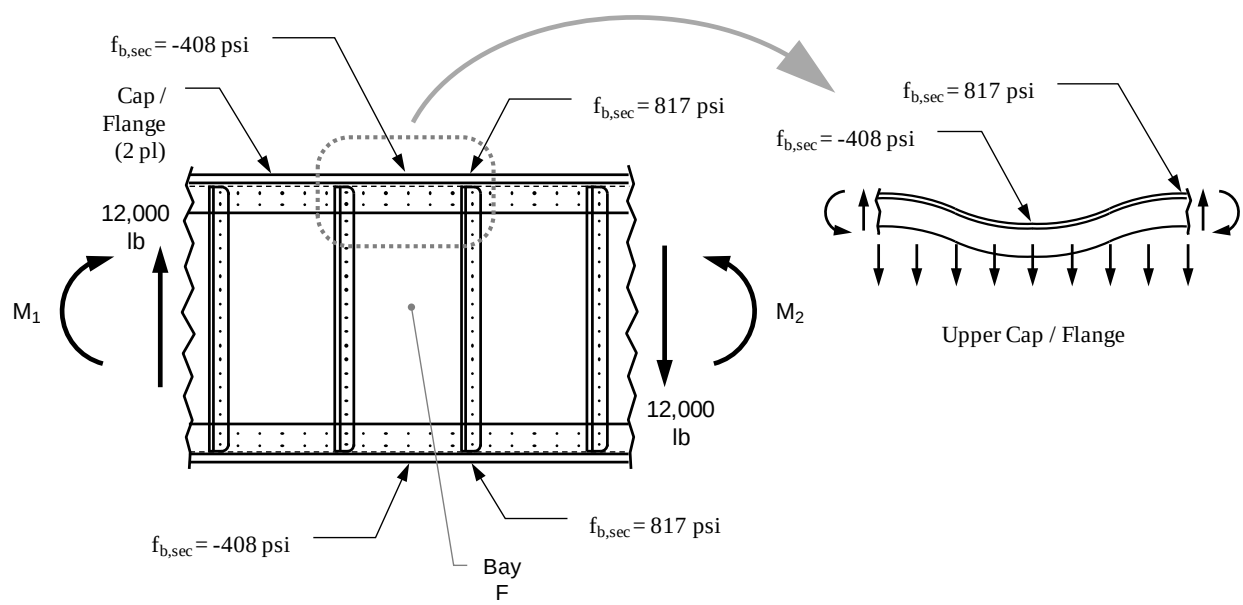

Copyright 2016 Lockheed Martin Corporation.
Note: The current version is always the version on the Lockheed Martin network.

aa) Determine the secondary axial stresses in the flanges:

Using Equation 6.6.3-42, the secondary compression load in the upper and lower flanges due to tension field action is:

$$P_{sec} = -\frac{kV}{2\tan\alpha}$$

From Step (h), the Diagonal Tension Factor is: k = 0.29

From the problem statement, the externally applied shear load is: V=12,000 lb

From Step (k), the Diagonal Tension Angle is: $\alpha = 41.8°$

The secondary compression load in the upper and lower flanges at Sections A-A and E-E is:

$$P_{sec}^{A-A} = P_{sec}^{E-E} = -\frac{0.29(12{,}000\ lb)}{2\tan(41.8°)} = -1{,}946\ lb$$

Using Equation 6.6.3-43, the secondary compression stress in the upper and lower flanges is:

$$f_{a,sec} = \frac{P_{sec}}{A_{cap}}$$

From Step (a), the upper and lower flange areas are is: $A_{cap} = 0.9528\ in^2$

The secondary compression stress in the upper and lower flanges at Sections A-A and E-E is:

$$f_{a,sec}^{A-A} = f_{a,sec}^{E-E} = \frac{-1{,}946\ lb}{0.9528\ in^2} = -2{,}042\ psi$$

The secondary compressive stress in the flanges are as shown:

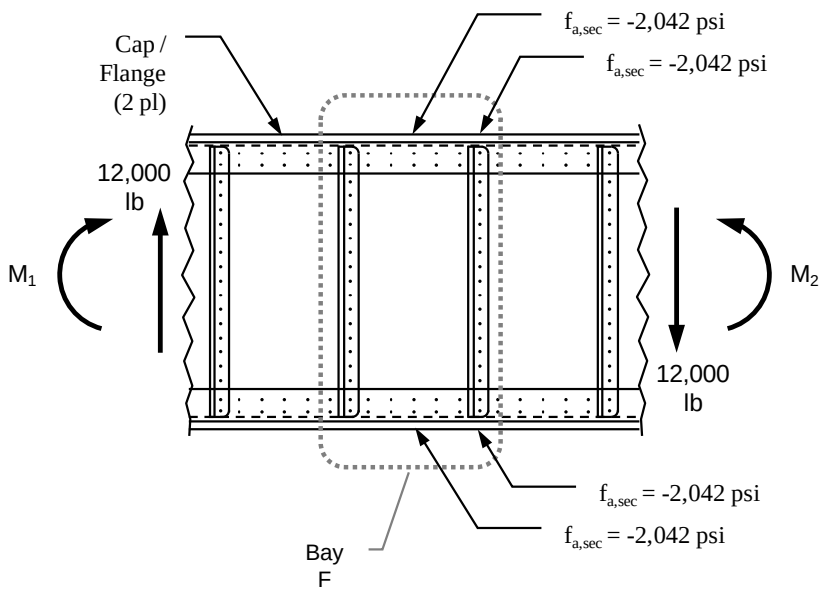

Copyright 2016 Lockheed Martin Corporation.
Note: The current version is always the version on the Lockheed Martin network.

bb) Determine the total stresses acting on the flanges:

The total flange stresses are the sum of the primary and secondary flange stresses from Steps (v), (w) and (x), calculated using Equation 6.6.3-44:

$$f_{b,tot} = f_{b,pr} + f_{b,sec} + f_{a,sec}$$

	Section A-A				Section E-E			
	$f_{b,pr}$ (psi), Step (v)	$f_{b,sec}$ (psi), Step (w)	$f_{a,sec}$ (psi), Step (x)	$f_{b,tot}$ (psi) Steps (v)+(w)+(x)	$f_{b,pr}$ (psi), Step (v)	$f_{b,sec}$ (psi), Step (w)	$f_{a,sec}$ (psi), Step (x)	$f_{b,tot}$ (psi) Steps (v)+(w)+(x)
Upper Flange OML	-32,521	-408	-2,042	-34,971	-35,477	817	-2,042	**-36,702**
Lower Flange OML	32,521	-408	-2,042	30,071	35,477	817	-2042	**34,252**

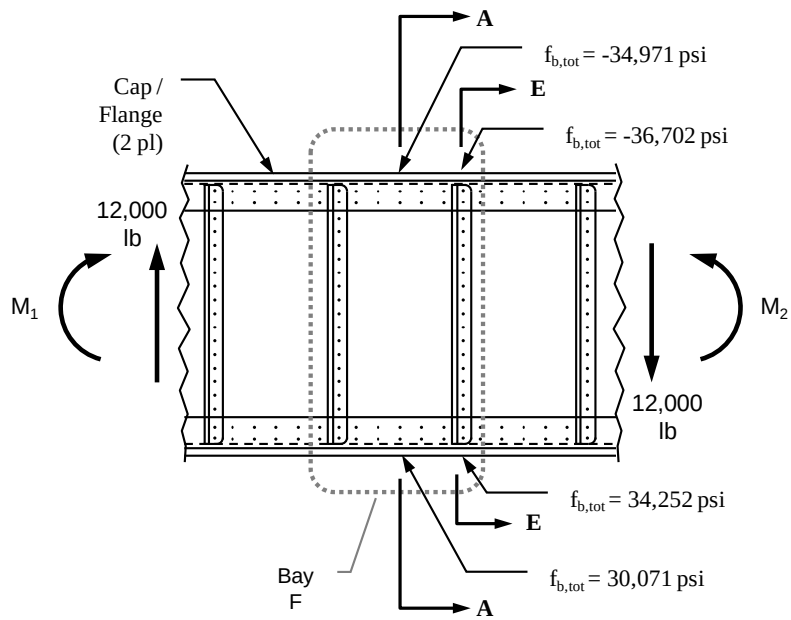

The upper and lower flanges at Section E-E are most critical for this example.

cc) Determine the strength and stability margins of safety for the upper and lower flanges:

<u>Upper Flange Strength:</u> Checked using the minimum of the crippling stress definition and F_{cu}:
From the problem definition, F_{cc}=62.881 ksi
From Table 1c, F_{cu}=79.90 ksi

The upper flange strength margin of safety is calculated using Equation 6.6.3-45:

$$MS_{ult} = \frac{F_{cc}}{f_{b,tot}} - 1$$

From Step (x) the maximum compression stress at Section E-E is: $f_{b,tot}$ = -36,702 psi. It is slightly conservative to use the value at the OML.

$$MS_{ult} = \frac{62{,}881\ psi}{36{,}702\ psi} - 1 = +0.71$$

<u>Upper Flange Stability:</u> Checked using the flange buckling stress:

Copyright 2016 Lockheed Martin Corporation.
Note: The current version is always the version on the Lockheed Martin network.

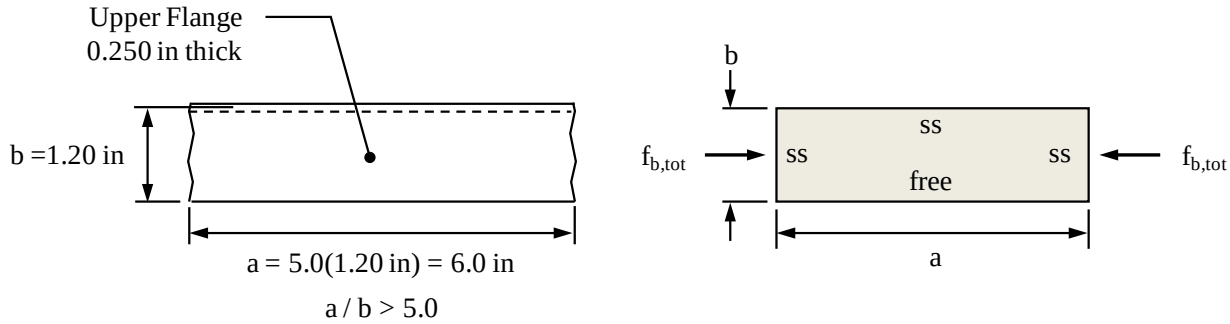

The compression buckling coefficient is obtained from Figure 10.3.2-1, with a/b = 5.0: k_c = 0.429
Using Equation 10.3.1-5, the flange buckling coefficient is:

$$K = \frac{k_c \pi^2}{12(1-v_e^2)} = \frac{0.429\,\pi^2}{12(1-0.33^2)} = 0.396$$

Using Equation 10.3.1-4, the effective b/t ratio is:

$$\left(\frac{b}{t}\right)_e = \frac{b}{t\sqrt{K}} = \frac{1.10\ in}{0.25\ in\sqrt{0.396}} = 6.99$$

IDAT SM33 v1.1 is used to generate the buckling curve for the 7075-T6511 extruded flange, as shown below.

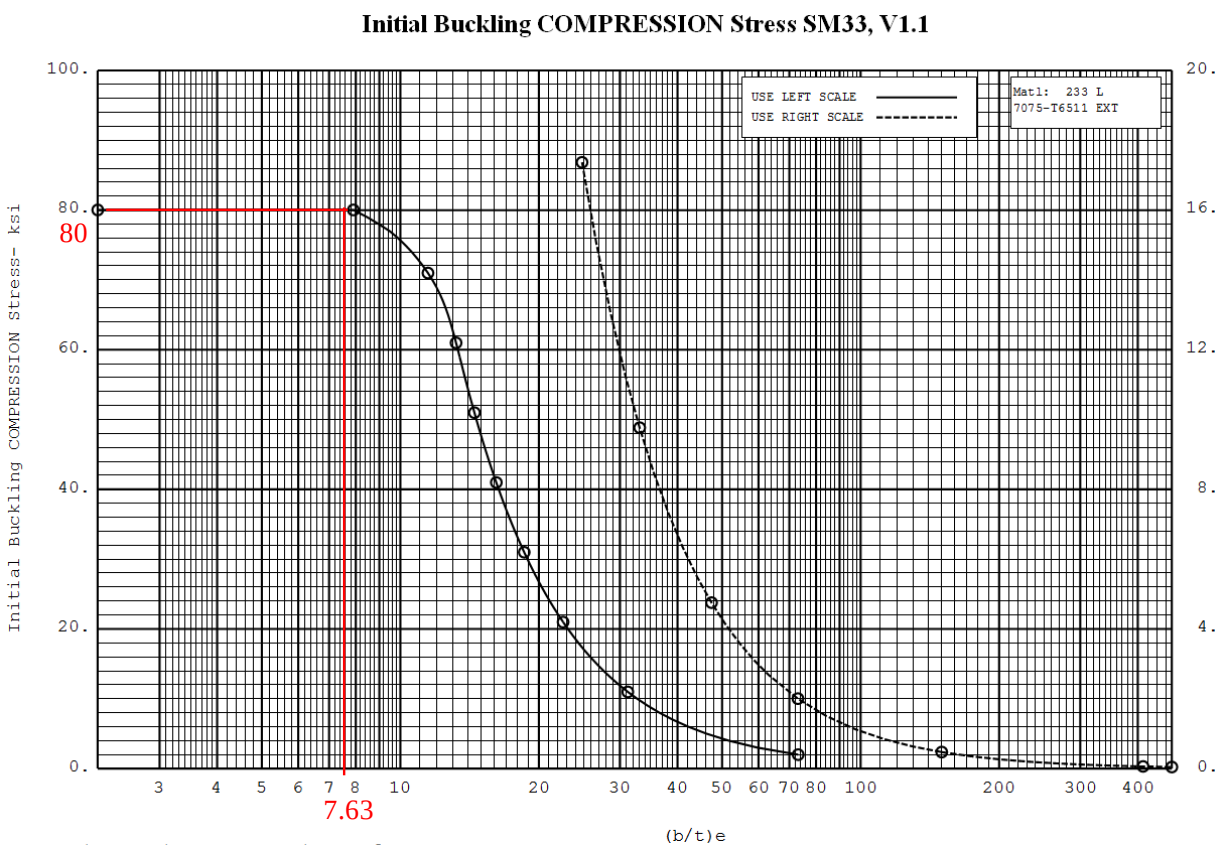

From the SM33 curve, F_c=80.0 ksi at room temperature. The elevated temperature correction is based on F_{cu} because the $(b/t)_e$ value is in the inelastic portion of the curve. From Table 1b, TRF=0.94.

$F_c = 0.94(80{,}000\ psi) = 75{,}200\ psi$

Copyright 2016 Lockheed Martin Corporation.
Note: The current version is always the version on the Lockheed Martin network.

The upper flange buckling margin of safety is calculated using Equation 6.6.3-46:

$$MS_{ult} = \frac{F_c}{f_{b,tot}} - 1$$

The stress at the mid-bay is used for the flange stability analysis. From Step (x) the maximum compression stress at Section A-A is: $f_{b,tot}$ = -34,971 psi. It is slightly conservative to use the value at the OML.

$$MS_{ult} = \frac{75{,}200\ psi}{34{,}971\ psi} - 1 = +1.15$$

<u>Lower Flange Strength:</u> Checked using Equation 6.6.3-47:

$$MS_{ult} = \frac{F_{tu}}{f_{b,tot}} - 1$$

From Table 1c, F_{tu}=79.90 ksi

From Step (x) the maximum tension stress at Section E-E is: $f_{b,tot}$ = 36,294 psi.

$$MS_{ult} = \frac{79{,}990\ psi}{34{,}252\ psi} - 1 = +1.33$$

The Margins of Safety are summarized as shown:

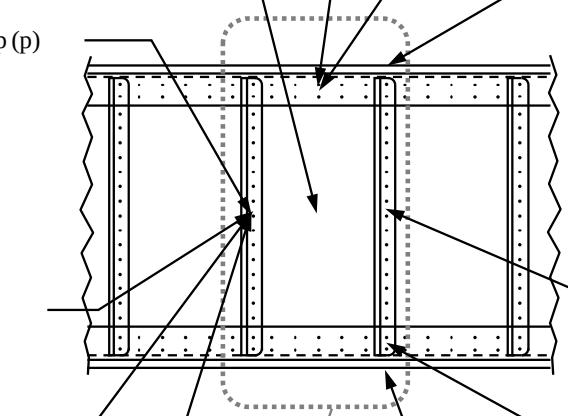

Note that the Margins of Safety are shown as calculated numerically, even where they are high (usually greater than +1.00 or +2.00). Refer to program policy regarding the reporting of high margins.

Copyright 2016 Lockheed Martin Corporation.
Note: The current version is always the version on the Lockheed Martin network.

6.6.4 Intermediate Diagonal Tension Machined Beams

The methods of analysis for IDT beams presented in Section 6.6.3 may generally be used for integrally machined structure. There are differences in the application of the methods to machined beams, which are summarized in this section.

For integrally machined beam configurations, several of the parameters from Table 6.6.3-1 are either modified or inapplicable; the range of machined beam configurations for which the diagonal tension strength analysis should be considered valid is given in Table 6.6.4-1.

Table 6.6.4-1: Machined Beam Configuration Range for Diagonal Tension Strength Analyses

Item	Description	Validity Range
$\frac{h}{t}$	$\frac{\text{Beam OML Height (in)}}{\text{Web Thickness (in)}}$	115 - 1000
$\frac{t_{u,o}}{t}$	$\frac{\text{Thickness of Stiffener Outstanding Flange (in)}}{\text{Web Thickness (in)}}$	>0.60
$\frac{t_{f,o}}{t}$	$\frac{\text{Thickness of Cap Outstanding Flange (in)}}{\text{Web Thickness (in)}}$	>1.0
$\frac{d_c}{h_c}$	$\frac{\text{Clear Upright Spacing (in)}}{\text{Clear Web Height (in)}}$	0.20 - 1.0
ωd	Flange Flexibility Factor, defined by Equation 6.6.3-8	<5.0

Copyright 2016 Lockheed Martin Corporation.
Note: The current version is always the version on the Lockheed Martin network.

Reference dimensions for integrally machined beams are shown in Figure 6.6.4-1.

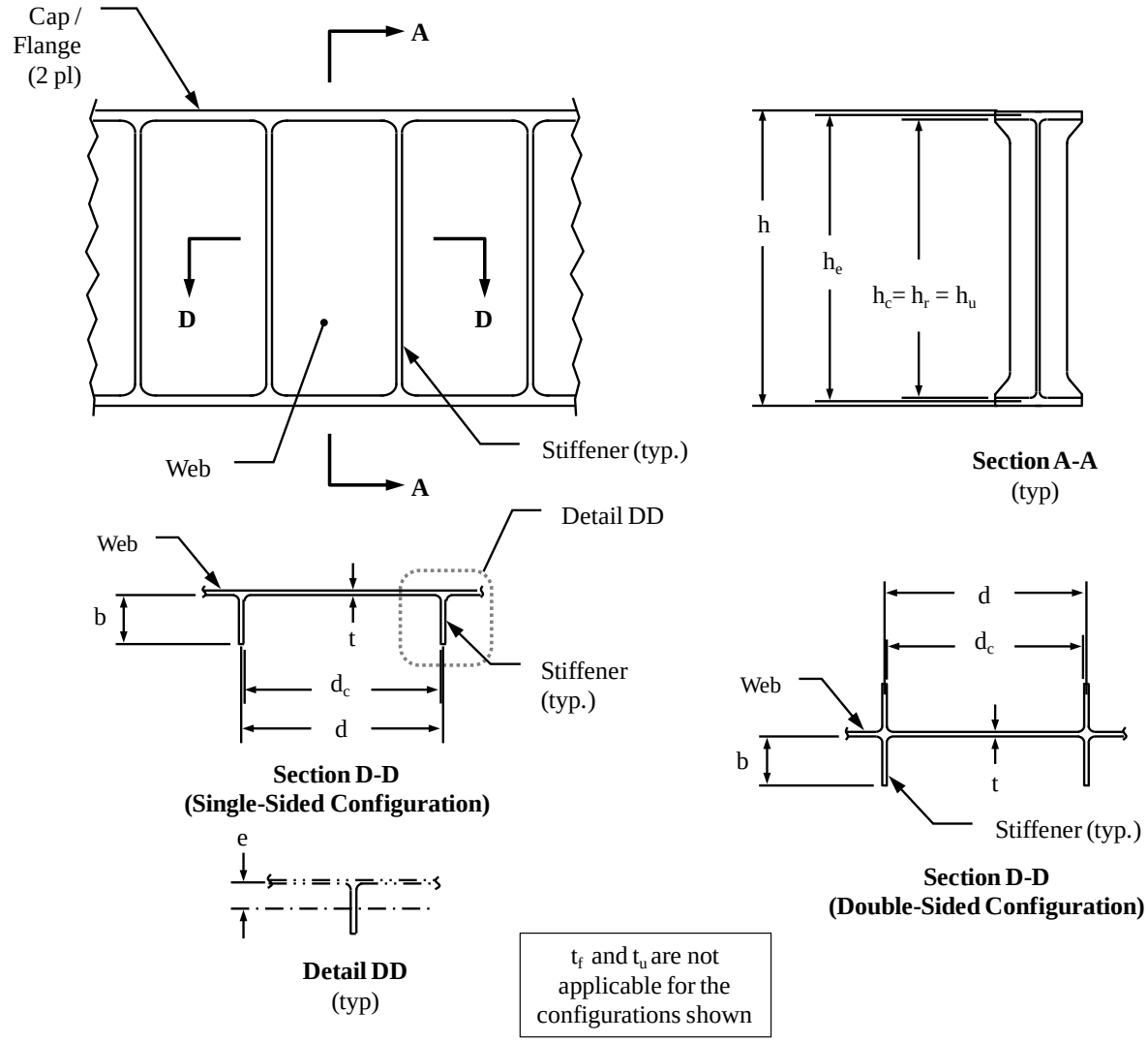

Figure 6.6.4-1: Diagonal Tension Analysis – Reference Dimensions, Machined Beam

Copyright 2016 Lockheed Martin Corporation.
Note: The current version is always the version on the Lockheed Martin network.

The effective cap sections for integrally machined beams are shown in Figure 6.6.4-2.

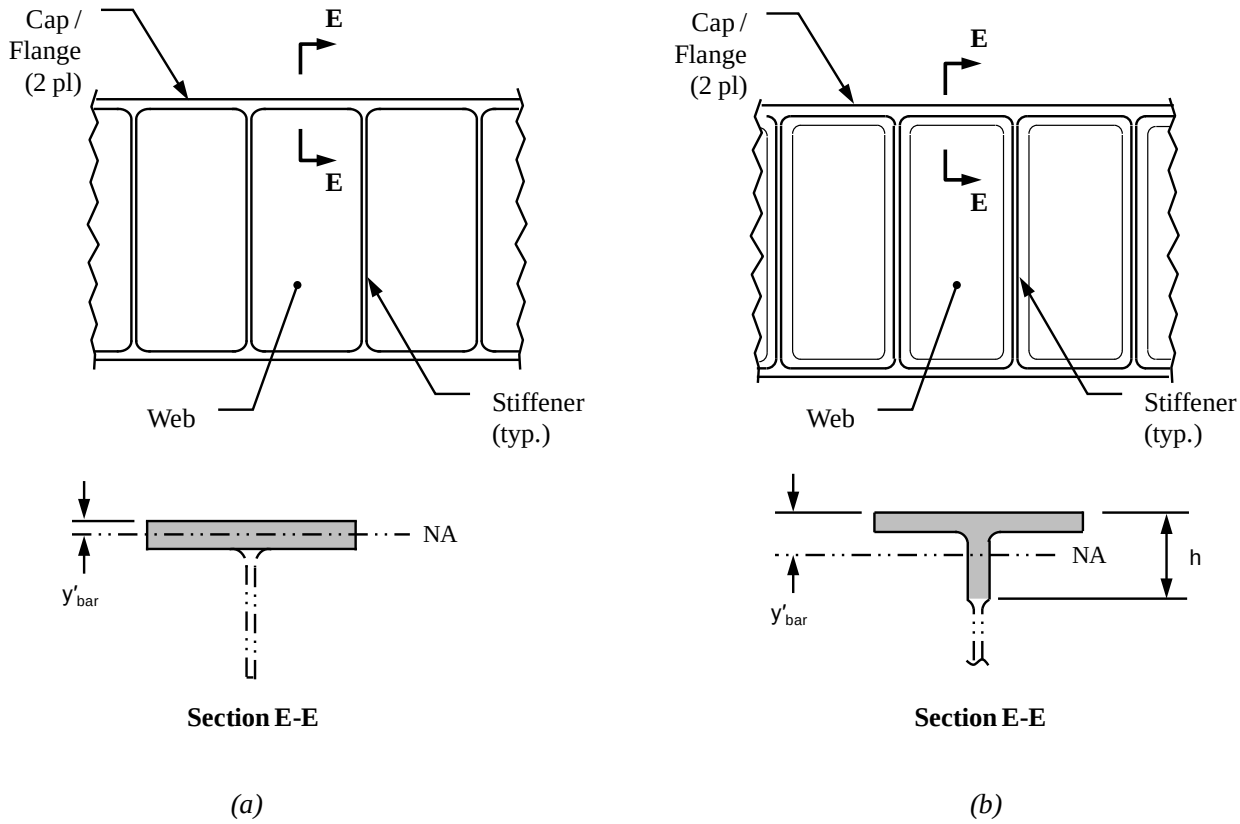

(a) *(b)*

Figure 6.6.4-2: Diagonal Tension Analysis – Machined Beam Effective Cap Sections

6.6.4.1 Intermediate Diagonal Tension Machined Beams –Web Strength and Stability Analysis

The equations and figures from Section 6.6.3.1 are applicable to machined beam webs, with the exceptions as described in Sections 6.6.4.1.1 through 6.6.4.1.3.

Fatigue note: Fleet service histories have shown that pocketed webs, as shown in Figure 6.6.4-2(b), may develop cracks at the stiffener and cap fillets if small radii are used. At these locations, out-of-plane bending stresses exist in the web due to the buckled waveform, as well as tension and shear. The state of stress for this detail is complex and component testing is recommended to perform reliable life analyses. Mitigation techniques include larger radii and surface treatment, such as peening.

Copyright 2016 Lockheed Martin Corporation.
Note: The current version is always the version on the Lockheed Martin network.

6.6.4.1.1 Machined Web Elastic Buckling Stress

Figure 6.6.3-4 is not used in determining the web buckling stress; this results in a simplification of Equation 6.6.3-1 to that shown:

$$F_{cr,el} = k_{ss}E\left(\frac{t}{d_c}\right)^2, \text{for } d_c < h_c$$

$$F_{cr,el} = k_{ss}E\left(\frac{t}{h_c}\right)^2, \text{for } d_c > h_c$$

Equation 6.6.4-1

Where:
k_{ss} is the web buckling coefficient (simply supported edges), from Figure 6.6.3-4(a)
E is the web elastic modulus (psi)
t is the web thickness (in)
d_c is the clear stiffener spacing (in)
h_c is the clear web height (in)

6.6.4.1.2 Machined Web Peak Shear Stress

The Flange Flexibility Factor, ωd, from Equation 6.6.3-8 is calculated using the effective cap sections shown in Figure 6.6.4-2. Note that the maximum ωd parameter for machined beams is 5.0. The peak shear stress, $f_{s,max}$, is applicable at the web-to-flange intersection.

6.6.4.1.3 Machined Web Allowable Shear Stress

The Fastener Factor, FF, from Table 6.6.3-6 is 1.10 for machined beams.

6.6.4.2 Intermediate Diagonal Tension Machined Beams – Stiffener Analysis

The equations and figures from Section 6.6.3.2 are applicable to machined beam stiffeners, with the exceptions as described in Sections 6.6.4.2.1 and 6.6.4.2.2.

6.6.4.2.1 Machined Stiffener Crippling Analysis

Since there is no stiffener leg attached to the web, the forced crippling analysis is not valid for machined beams. In its place, a crippling analysis of the effective stiffener section is performed as described in Section 8.4, using the maximum stiffener compressive stress. The crippling section includes effective web material as shown in Figure 6.6.1-10 (b) and (c). Due to the presence of the buckled web, the edge condition for all cross section elements is assumed to be One Edge Free.

6.6.4.2.2 Machined Web Inter-rivet Buckling Analysis

Since the web is not mechanically attached to the stiffener, this is not an applicable failure mode.

The effective cross-sectional area used in the stiffener strength analyses are shown in Figure 6.6.1-10(b). The exception is the crippling analysis described in Section 6.6.4.2.1, which includes some effective web material.

6.6.4.3 Intermediate Diagonal Tension Machined Beams – Joint Analysis

The joint analyses described in Section 6.6.3.3 are not applicable to integrally machined beams. Manufacturing splices and attachments to skin or other surrounding structure must be checked as described in Sections 6.6.1.10, 6.6.1.13 and 6.6.1.14.

Copyright 2016 Lockheed Martin Corporation.
Note: The current version is always the version on the Lockheed Martin network.

6.6.4.4 Intermediate Diagonal Tension Machined Beams – Flange Analysis

The equations and figures from Section 6.6.3.4 are applicable to machined beam flanges, with the exceptions as described below:

Flange secondary bending stress:
The flange stresses due to secondary bending moments are calculated using the shaded cross-sectional areas shown in Figure 6.6.4-2. The flange secondary bending moments are given by Equation 6.6.3-40. At the fillet point of tangency, the flange secondary bending moment is given by Equation 6.6.4-2:

$$M_{sec}^{fillet} = \frac{1}{12}\, k\, f_s\, t\, C_3 (6x_f^2 + d^2 - 6x_f d) \qquad \textbf{Equation 6.6.4-2}$$

Where:
k is the diagonal tension factor from Equation 6.6.3-5
f_s is the web shear stress (psi)
t is the web thickness (in)
d is the stiffener spacing (in)
x_f is the dimension to the fillet tangency, as shown in Figure 6.6.4-3 (in)
C_3 is the stress concentration factor from Figure 6.6.3-10

The beam flange secondary bending moments are shown in Figure 6.6.4-3 and act on the flange sections only.

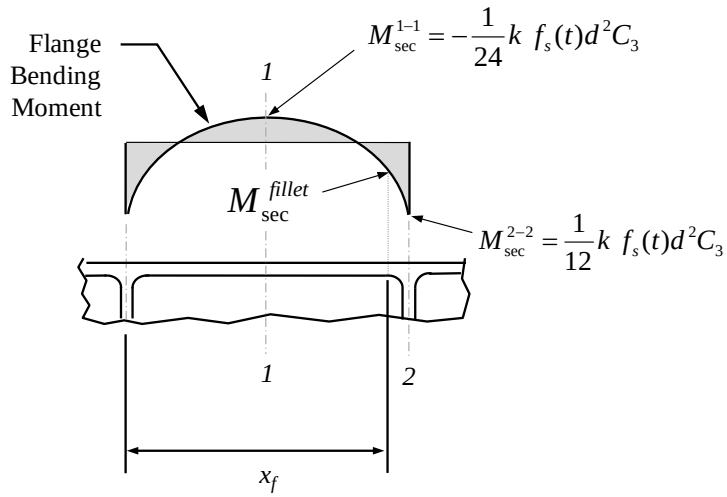

Figure 6.6.4-3: Diagonal Tension Analysis – Secondary Bending Moment at Fillet Tangency

If the region under consideration is the pocket of an interior bay (as shown in Figure 6.6.4-4) the flange secondary bending stresses are not considered in the analysis. In this case, the support provided by the adjacent bays results in high bending resistance and the secondary bending stress is negligible. The flange secondary compression load from Equation 6.6.3-42 *is* used for an interior bay; if the adjacent bay is also buckled, it will add to the secondary compression load.

Copyright 2016 Lockheed Martin Corporation.
Note: The current version is always the version on the Lockheed Martin network.

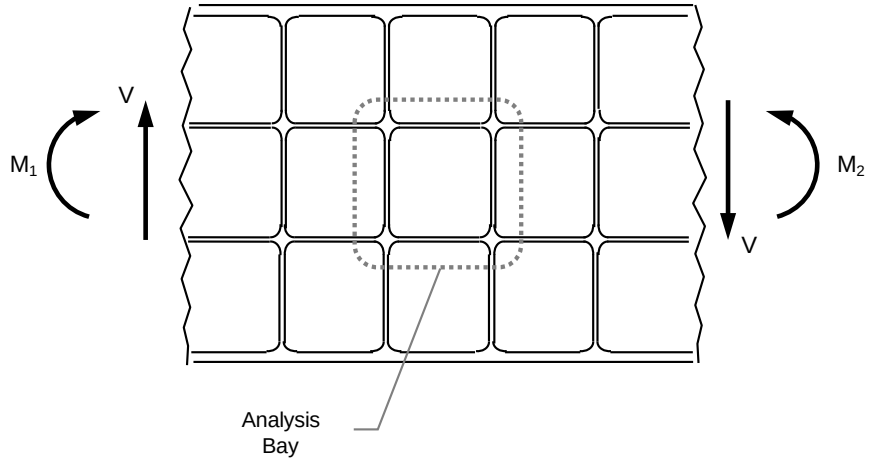

Figure 6.6.4-4: Diagonal Tension Analysis – Machined Beam Interior Pocket

Copyright 2016 Lockheed Martin Corporation.
Note: The current version is always the version on the Lockheed Martin network.

6.6.4.5 Example Calculation – Intermediate Diagonal Tension Beam Strength Analysis, Integrally Machined Beam

Given:
The Ultimate loads acting on the machined beam shown are: V= 12,000 lb, M=12,000 lb (40 in) = 480,000 in-lb.

Assume:
1. The beam is part of a fatigue and stiffness critical assembly.
2. The part is machined with a thickness tolerance of +/- 0.007 in.
3. The end bays are unbuckled at Ultimate load.
4. The beam is restrained against lateral displacement.
5. The longitudinal grain direction is beam spanwise for all components except the stiffeners.
6. The beam operating temperature is 160° F.
7. Ultimate load = 1.5 (Limit Load)

Determine the strength margins of safety for Bay F at Ultimate load.

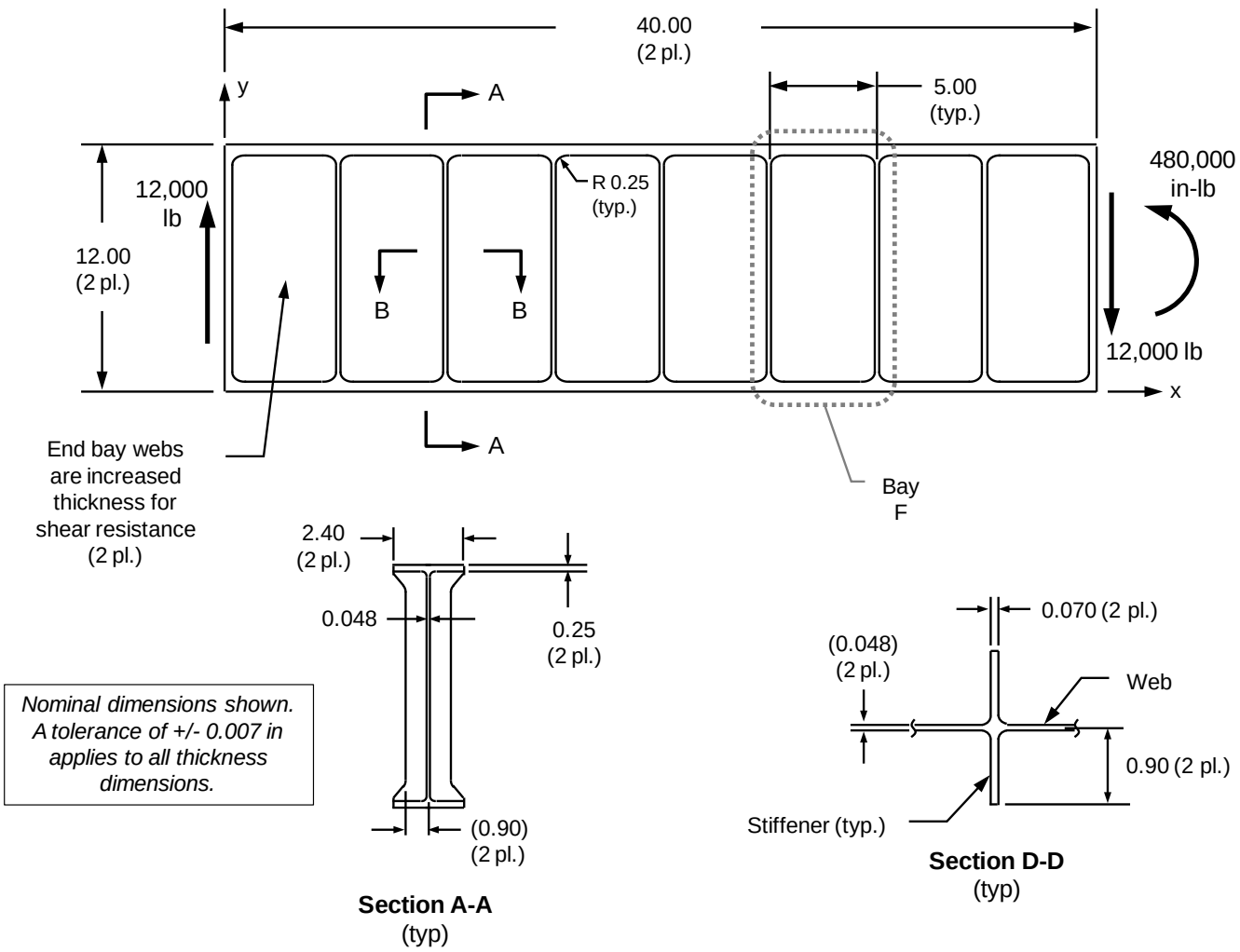

Figure 1: Beam Configuration

Copyright 2016 Lockheed Martin Corporation.
Note: The current version is always the version on the Lockheed Martin network.

Table 1a: Beam Material Properties at Room Temperature [1]

Item	Material	E_t, msi	E_c, msi	F_{tu}, ksi	F_{ty}, ksi	F_{cu}, ksi [2]	F_{cy}, ksi	F_{su}, ksi	F_{sy}, ksi [2]	F_{bru}, ksi	F_{bry}, ksi [2]	F_{pl_t}, ksi	F_{pl_c}, ksi
Machining - L Direction	7050-T7451 Plate, 2.00-3.00 Thick, B-Basis	10.30	10.60	76.00	66.00	73.70	64.00	44.00	35.70	146.00	107.00	56.40	54.70
Machining - T Direction	7050-T7451 Plate, 2.00-3.00 Thick, B-Basis	10.30	10.60	76.00	66.00	79.50	69.00	38.00	32.40	146.00	107.00	57.60	60.20

Table 1b: Beam Material Properties at 160° F [1]

Item	Material	E_t, msi	E_c, msi	F_{tu}, ksi	F_{ty}, ksi	F_{cu}, ksi [2]	F_{cy}, ksi	F_{su}, ksi	F_{sy}, ksi [2]	F_{bru}, ksi	F_{bry}, ksi [2]	F_{pl_t}, ksi	F_{pl_c}, ksi
Machining - L Direction	7050-T7451 Plate, 2.00-3.00 Thick, B-Basis	10.05	10.34	67.20	63.90	64.20	61.00	38.00	33.70	127.30	99.20	54.60	52.10
Machining - T Direction	7050-T7451 Plate, 2.00-3.00 Thick, B-Basis	10.05	10.34	67.20	62.90	69.20	64.90	33.60	30.70	127.30	99.20	54.90	56.60

[1] Reference IDAT METDB v3.3b
[2] Calculated using IDAT METDB v3.3b per PM4057 Section 3

Solution Step:

a) Determine analysis thickness adjustments due to +/- 0.007 in machining tolerance:

Per Section 2.6.2.2, if the negative tolerance is more than 10% of the nominal feature thickness, an adjustment is required in the analysis. In this case, the thickness used in the analysis is 1.11 times the minimum thickness. The part analysis thickness requirements are summarized below:

$Feature$	$Thickness, in$	$\frac{Thickness\ Tolerance}{Nominal\ Thickness} \times 100$	$Adjustment\ Required\ ?$	$Analysis\ Thickness\ (in)$
Web	0.048 +/- 0.007	15	Yes	0.046
Stiffeners	0.070 +/- 0.007	10	No	0.070
Flanges	0.25 +/- 0.007	3	No	0.250

b) Determine section properties of the caps and stiffeners:

<u>The section properties of the caps are:</u>

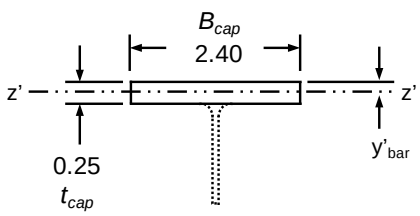

Nominal dimensions shown. From Figure 1, machining thickness tolerance is +/- 0.007.

From Step (a), no thickness tolerance adjustment is required in the flange analysis.

$$y'_{bar} = 0.125\ in$$

$$A_{cap} = B_{cap} t_{cap} = 2.40\ in(0.25\ in) = 0.600\ in^2$$

$$I_{cap} = \frac{B_{cap}(t_{cap})^3}{12} = \frac{2.40\ in(0.25\ in)^3}{12} = 0.003125\ in^4$$

Copyright 2016 Lockheed Martin Corporation.
Note: The current version is always the version on the Lockheed Martin network.

The section properties of the stiffeners are:

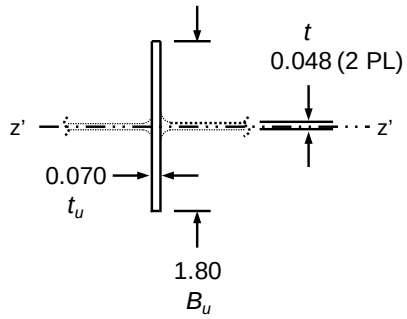

Nominal dimensions shown. From Figure 1, machining thickness tolerance is +/- 0.007.

From Step (a), no thickness tolerance adjustment is required in the stiffener analysis.

$$A_u = (B_u - t)t_u = (1.80\ in - 0.046\ in)(0.070\ in) = 0.1228\ in^2$$

$$I_u = \frac{t_u(B_u)^3}{12} - \frac{t_u(t)^3}{12} = \frac{0.070\ in(1.80\ in)^3}{12} - \frac{0.070\ in(0.046\ in)^3}{12} = 0.0340\ in^4 - 0.000001\ in^4 = 0.0340\ in^4$$

The second term in the I_u calculation is obviously negligible in this case, but included for illustration.

The radius of gyration about the z′ - z′ axis is:

$$\rho_u = \sqrt{\frac{I_u}{A_u}} = \sqrt{\frac{0.0340\ in^4}{0.1228\ in^2}} = 0.5261\ in$$

c) Determine the beam effective height and the beam moments of inertia before and after web buckling (with and without the web):

The beam effective height (h_e) is:

$$h_e = h - 2(y'_{bar}) = 12.0\ in - 2(0.125\ in) = 11.75\ in$$

The beam true web height (h_w) is:

$$h_w = h - 2 = 12.0\ in - 2(0.25\ in) = 11.50\ in$$

The moment of inertia calculations are based on Equation 4.2.1-8.

(Note that for the machined beam the true web height is the same as the clear web height.)

The beam moment of inertia before buckling includes the contributions from the caps plus web:

(Note that the subscript "*SR*" denotes "*Shear Resistant*")

Note that from Step (a), the adjusted web thickness is: t=0.046 in

$$I_{SR} = 2\left[I_{cap} + A_{cap}\left(\frac{h_e}{2}\right)^2\right] + \frac{t(h_w)^3}{12} = 2\left[0.003125\ in^4 + 0.600 in^4\left(\frac{11.75\ in}{2}\right)^2\right] + \frac{0.046\ in\ (11.50\ in)^3}{12}$$

$$I_{SR} = 41.425\ in^4 + 5.830\ in^4 = 47.255\ in^4$$

The beam moment of inertia after buckling includes the contributions from the caps only:

(Note that the subscript "*PB*" denotes "*Post Buckled*")

$$I_{PB} = 2\left[I_{cap} + A_{cap}\left(\frac{h_e}{2}\right)^2\right] = 2\left[0.003125\ in^4 + 0.600 in^4\left(\frac{11.75\ in}{2}\right)^2\right] = 41.425\ in^4$$

Copyright 2016 Lockheed Martin Corporation.
Note: The current version is always the version on the Lockheed Martin network.

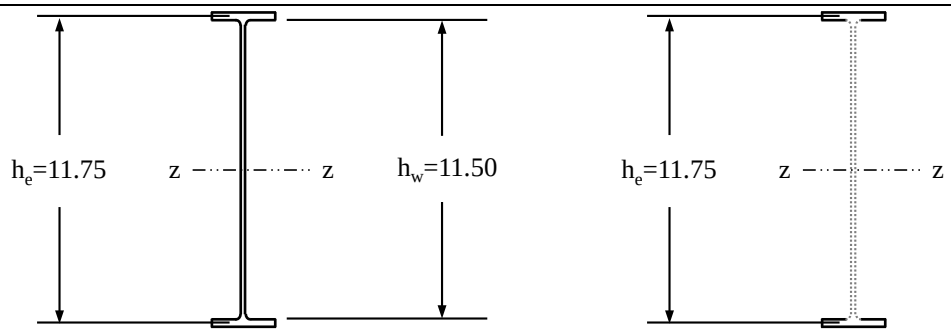

(a)
Beam Section
Including Web

I_{SR}=47.255 in^4

(b)
Beam Section
Not Including Web

I_{PB}=41.425 in^4

d) Determine the flange flexibility factor (ωd):

Using Equation 6.6.3-8, the flange flexibility factor is:

$$\omega d = 0.707d\left[\frac{t}{(I_T + I_C)h_e}\right]^{1/4}$$

From Step (a), the adjusted web thickness is: t=0.046 in
Stiffener spacing: d = 5.0 in, from Figure 1
Flange moment of inertia: $I_T = I_C = I_{cap}$ = 0.003125 in^4, Step (b)
Beam effective height: h_e = 11.75 in, from calculation above, Step (c)

$$\omega d = 0.707(5.0\ in)\left[\frac{0.046\ in}{(0.003125\ in^4 + 0.003125\ in^4)11.75\ in}\right]^{1/4} = 3.145$$

Copyright 2016 Lockheed Martin Corporation.
Note: The current version is always the version on the Lockheed Martin network.

e) Summarize the beam geometry required for analysis using the dimensions from Figure 1 and the results from Step (d):

Reference Figure 6.6.4-1 for geometry definitions.

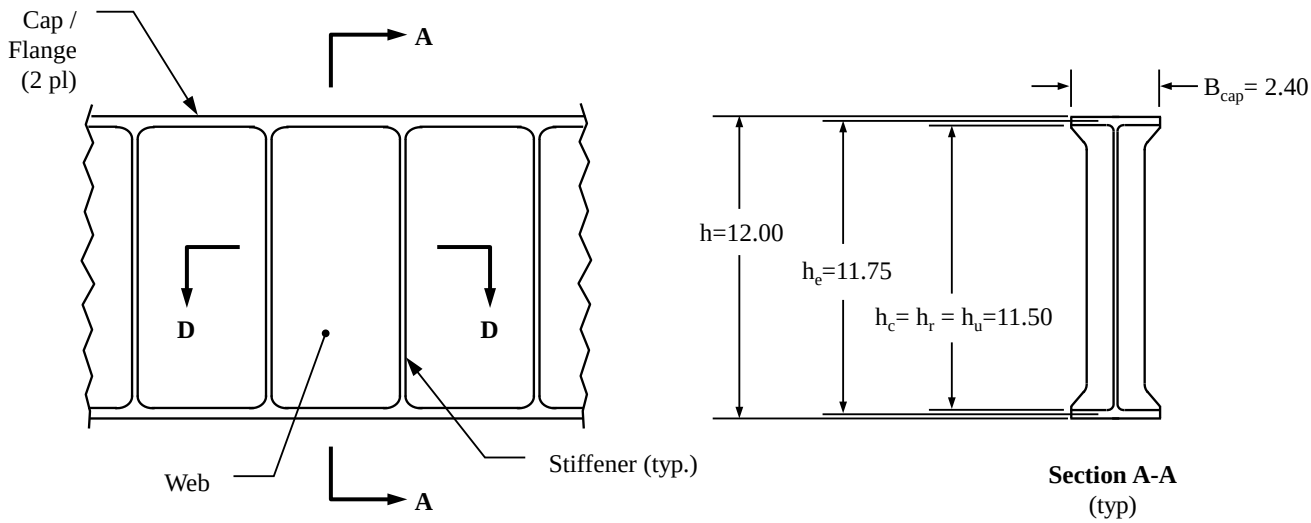

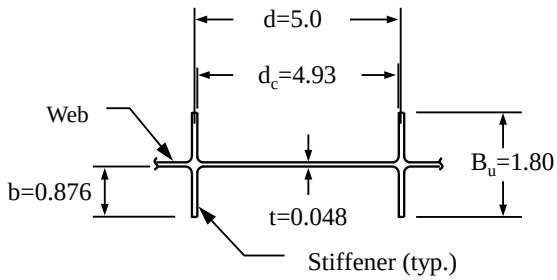

Section D-D

Nominal dimensions shown. A tolerance of +/- 0.007 in applies to all thickness dimensions.

f) Verify beam parameters are within the ranges specified in Table 6.6.4-1:
(Note that from Step (a), the adjusted web thickness is: t=0.046 in)

Item	Validity Range	Within Range? (Y/N)
$\frac{h}{t} = \frac{12.00\text{ in}}{0.046\text{ in}} = 260.9$	115 - 1000	Y
$\frac{t_{u,o}}{t} = \frac{0.070\text{ in}}{0.046\text{ in}} = 1.52$	>0.60	Y
$\frac{t_{f,o}}{t} = \frac{0.250\text{ in}}{0.046\text{ in}} = 5.43$	>1.0	Y
$\frac{d_c}{h_c} = \frac{4.93\text{ in}}{11.50\text{ in}} = 0.43$	0.20 - 1.1	Y
$\omega d = 3.145$, from Step (d)	<5.0	Y

The beam parameters are within the ranges of validity to ensure accuracy in the strength analyses.

Copyright 2016 Lockheed Martin Corporation.
Note: The current version is always the version on the Lockheed Martin network.

g) Determine the average shear stress acting on the web using the shear load V = 12,000 lb, and calculate the weight efficiency index as described in Section 6.6:

h_e = 11.75 in, from Step (c)

Using Equation 6.5.5-1, the average shear flow for the panel is:

$$q = \frac{V}{h_e}$$

$$q = \frac{12{,}000\ lb}{11.75\ in} = 1{,}021\ \ lb/in$$

Using Equation 6.5.5-1, the average shear stress for the panel is:

$$f_s = \frac{q}{t}$$

From Step (a), the adjusted web thickness is: t=0.046 in:

$$f_s = \frac{1{,}021\ lb/in}{0.046\ in} = 22{,}196\ psi$$

The beam weight efficiency index is determined using Equation 6.6-2:

$$\frac{q}{h_e} = \frac{1{,}021\ lb/in}{11.75\ in} = 86.9$$

The weight efficiency guidelines are:

$$\frac{q}{h_e} < 49,\ \text{Diagonal tension design is most weight-efficient}$$

$$\frac{q}{h_e} > 121,\ \text{Shear-resistant design is most weight-efficient}$$

Since q / h_e = 86.9 and thus between 49 and 121, diagonal tension design may or may not result in the most weight-efficient beam configuration. In an actual design, a weight trade study would be advised.

h) Determine the buckling Ratio-To-Requirement using the average shear stress:

<u>Calculate the initial buckling stress for Bay F</u>:

From the Step (e) illustration, the panel dimensions are: d_c = 4.93 in, h_c = 11.50 in

From Step (a), the adjusted web thickness is: t=0.046 in

Obtain the buckling coefficient using Figure 6.6.3-4(a): k_{ss} = 5.65

From the Step (f) table, t_u / t = 1.0, t_f / t = 1.0

Obtain the restraint coefficients using Figure 6.6.3-4(b): R_h = 1.0, R_d = 1.0

Using Equation 6.6.4-1, for $d_c < h_c$, the elastic shear buckling stress is:

$$F_{cr,el} = k_{ss} E \left(\frac{t}{d_c}\right)^2$$

From Table 1b, the beam modulus, E = 10.05 msi at 160° F. The elastic shear buckling stress is:

$$F_{cr,el} = 5.65(10.05E6\ psi)\left(\frac{0.046\ in}{4.93\ in}\right)^2 = 4{,}944\ psi$$

From Table 1b, the proportional limit stress is 54,600 psi; no plasticity correction is required:

$$F_{cr} = 4{,}944\ psi$$

Copyright 2016 Lockheed Martin Corporation.
Note: The current version is always the version on the Lockheed Martin network.

Using Equation 6.6.3-3, the buckling ratio is:

$$R = \frac{f_s}{F_{cr}}$$

From Step (g), the web average shear stress is: f_s=22,196 psi

$$R = \frac{22{,}196\ psi}{4{,}944\ \text{psi}} = 4.49$$

Per the problem statement, the beam is part of a fatigue / stiffness critical assembly. The buckling ratio is therefore limited to a maximum value of 5.0; using Equation 6.6.3-4, the buckling Ratio-To-Requirement is:

$$RTR_w = \frac{5.0}{R} = \frac{5.0}{4.49} = 1.11 \geq 1.0$$

RTR_w is greater than 1.0, so the buckling ratio is acceptable.

i) Determine the Diagonal Tension Factor Ratio-To-Requirement using the buckling ratio from Step (h):

From Step (h):

$$\frac{f_s}{F_{cr}} = 4.49$$

Using Equation 6.6.3-5, the diagonal tension factor, k is:

$$k = \tanh\left[0.5\ log_{10}\frac{f_s}{F_{cr}}\right] = \tanh[0.5\ log_{10}(4.49)] = 0.32$$

For reference, this means that 32% of the applied shear load is carried by diagonal tension and 68% is carried by the shear-resistant panel. Note that the diagonal tension factor may alternatively be obtained using Figure 6.6.3-6.

<u>Allowable diagonal tension factor</u>:

Using Equation 6.6.3-6, the maximum permissible diagonal tension factor for the 0.046 in web is:

$$k_{all} = 0.78 - \sqrt{t - 0.012} = 0.78 - \sqrt{0.046 - 0.012} = 0.60$$

Using Equation 6.6.3-7, the diagonal tension Ratio-To-Requirement is:

$$RTR_k = \frac{k_{all}}{k} = \frac{0.60}{0.32} = 1.88 \geq 1.0$$

RTR_k is greater than 1.0, so the diagonal tension factor is acceptable.

j) Determine the average stiffener compression stress:

From Step (b), the stiffener section properties are:

A_u = 0.1228 in^2 I_u = 0.0340 in^4 ρ_u=0.5261 in

The stiffeners are double-sided so the effective stiffener area calculation is not required and Figure 6.6.3-7 is used. From the Step (e) illustration, d=5.0 in and t=0.046 in, so the parameter A_u / d t is:

$$\frac{A_u}{d\ t} = \frac{0.1228\ in^2}{5.0\ in(0.046\ in)} = 0.534$$

Using k=0.32 from Step (i), the ratio of stiffener compression stress to web shear stress from Figure 6.6.3-7 is:

$$\frac{f_u}{f_s} = 0.34$$

Copyright 2016 Lockheed Martin Corporation.
Note: The current version is always the version on the Lockheed Martin network.

From Step (g), the web shear stress is: f_s=22,196 psi. The average stiffener compression stress is then:

$$f_u = 0.34(22{,}196\ psi)(-1) = -7{,}547\ psi$$

This is the average compression stress over the length of the stiffener. Due to the double-sided stiffener configuration, it is uniformly distributed over the cross section.

k) Determine the maximum stiffener compression stress:

From the Step (e) illustration, the applicable panel dimensions are:

d=5.0 in h_u=11.50 in

$$\frac{d}{h_u} = \frac{5.0\ in}{11.50\ in} = 0.435$$

Using k=0.32 from Step (i), the ratio of maximum stiffener stress to average stiffener stress from Figure 6.6.3-12 is:

$$\frac{f_{u,max}}{f_u} = 1.33$$

From Step (j), the average stiffener compression stress is: f_u= - 7,547 psi. Using Equation 6.6.3-20, the maximum stiffener compression stress is then:

$$f_{u,max} = \frac{f_{u,max}}{f_u} \times f_u = 1.33(-7{,}547\ psi) = -10{,}038\ psi$$

This is the maximum compression stress in the stiffener, which occurs at the neutral axis of the beam and is uniformly distributed over the cross section. This stress occurs when the web has just buckled.

l) Determine the intermediate diagonal tension angle (α):

From Step (j), the ratio of average stiffener stress to web shear stress is:

$$\frac{f_u}{f_s} = 0.34$$

From Step (i), the diagonal tension factor is:

$$k = 0.32$$

Using Figure 6.6.3-8, the tangent of the intermediate diagonal tension angle is:

$$\tan\alpha = 0.905$$

The intermediate diagonal tension angle is:

$$\arctan\alpha = \arctan(0.905) = 42.1°$$

Note that this angle is used in later steps.

m) Determine the peak web shear stress ($f_{s,max}$):

<u>Determine web stress peaking factors</u> C_1 and C_2:

From Step (l), tan α = 0.905.

Using Figure 6.6.3-9, the angle factor C_1=0.006

From Step (d), the Flange Flexibility Factor, ωd = 3.145.

Using Figure 6.6.3-10, the web stress concentration factor C_2=0.52.

From Step (g), the web shear stress is: f_s=22,196 psi

From Step (i), the diagonal tension factor is: k=0.32

Using Equation 6.6.3-10, the peak web shear stress is:

$$f_{s,max} = f_s(1 + k^2C_1)(1 + kC_2) = 22{,}196\ psi(1 + 0.32^2 \times 0.006)(1 + 0.32 \times 0.52)$$

$$f_{s,max} = 25{,}905\ psi$$

Copyright 2016 Lockheed Martin Corporation.
Note: The current version is always the version on the Lockheed Martin network.

n) Determine the allowable web shear stress ($F_{s,all}$):

From Step (i), the diagonal tension factor is: k=0.32

Using Figure 6.6.3-11(b) with α_{PDT} = 45°, the *basic* allowable web shear stress is:

$$F_{all}^{*} = 28.8\ ksi$$

The basic allowable shear stress is modified to account for fastener type and web material strength as described in Section 6.6.3.1.3:

Fastener Factor (FF): From Table 6.6.3-6, FF=1.10

Material Factor (MF):

From Table 1b, F_{tu}=67.2 ksi at 160° for 7050-T7451 Plate

Using Equation 6.6.3-12(b), the Material Factor is:

$$MF_{7000} = \frac{F_{tu}}{72.0\ ksi} = \frac{67.2\ ksi}{72.0\ ksi} = 0.93$$

Shear Reduction Factor (RS): From Table 6.6.3-7

$$RS = \frac{Minimum(F_{su-L}, F_{su-LT})}{Maximum(F_{su-L}, F_{su-LT})} \leq 1.0 = \frac{Minimum\ (38.00, 33.60)}{Maximum\ (38.00, 33.60)} = 0.88$$

Using Equation 6.6.3-11, the web allowable shear stress is:

$$F_{all} = FF \times MF \times RS \times F_{all}^{*} = 1.10 \times 0.93 \times 0.88 \times 28.8\ ksi = 25.93\ ksi$$

o) Determine the web strength margin of safety using the peak shear stress, $f_{s,max}$, from Step (m) and the allowable shear stress, $F_{s,all}$, from Step (n):

Using Equation 6.6.3-13, the web strength margin of safety is:

$$MS_{ult} = \frac{F_{s,all}}{f_{s,max}} = \frac{25{,}930\ psi}{25{,}905\ psi} - 1 = +0.00$$

As described in Section 6.6.4.1.2, the margin is applicable at the web-to-cap (flange) intersection.

p) Determine the stiffener compression load due to beam curvature

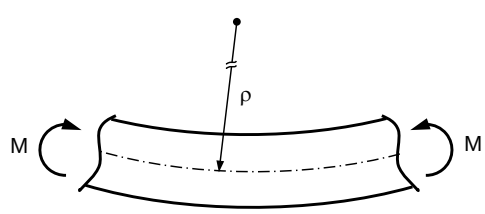

The radius of curvature in bending is approximated through use of Equation 6.2.5-18 (beam deflection equation):

$$\frac{1}{\rho} = \frac{M}{EI}$$

$M = V\ x = 12{,}000\ lb(30.0\ in) = 360{,}000\ in\text{-}lb$, maximum for Bay F

The beam modulus from Table 1b is: E=10.05 msi

The beam moment of inertia from Step (c) is: I_{PB} = 41.425 in^4

The beam radius of curvature is:

Copyright 2016 Lockheed Martin Corporation.
Note: The current version is always the version on the Lockheed Martin network.

$$\rho = \frac{EI}{M} = \frac{10.05E6\ psi\ (41.425\ in^4)}{360{,}000\ in\text{-}lb} = 1{,}156\ in$$

The average web running load, at the neutral axis is:

$$w = \frac{P_{cap}}{\rho}, \text{ (Equation 6.2.5-15,-16), where } P_{cap} = \frac{M}{h_e}$$

$h_e = 11.75\ in$, from the Step (c) illustration

$$w = \frac{M}{h_e\ \rho} = \frac{360{,}000\ in - lb}{11.75\ in\ (1{,}156\ in)} = -27\ \frac{lb}{in}$$

The total load for Bay F (5 in width) is:

$$W = -27\ \frac{lb}{in}(5.0\ in) = -135\ lb$$

In diagonal tension beams, the crushing loads due to curvature are assumed to be carried by the stiffeners only. This load is shared between the stiffener and the effective width of unbuckled web. For simplicity it is assumed to act on the stiffener alone.

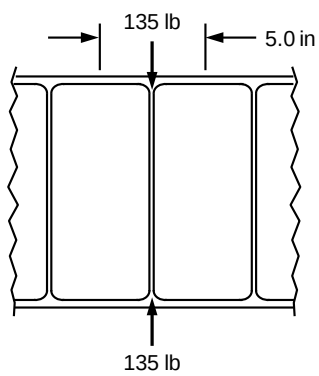

From Step (b), the stiffener area is: $A_u = 0.1229\ in^2$
The stiffener compression stress due to curvature is:

$$f_{u,r} = \frac{W}{A_u} = \frac{-135\ lb}{0.1228\ in^2} = -1099\ psi$$

q) Determine the stiffener margins of safety for compression yield and column buckling:

The total stiffener compression stress is the average compression stress in the stiffener, f_u, plus the compression stress due to curvature, $f_{u,r}$:
From Step (j): f_u= -7,547 psi; from Step (p): $f_{u,r}$= -1,099 psi
The average total stiffener compression stress is:

$$f_{u,tot} = f_u + f_{u,r} = -7{,}547\ psi - 1{,}099\ psi = -8{,}646\ psi$$

Reference Sections 6.6.3.2.1 and 6.6.3.2.2 , the yield and column checks required for a double-sided stiffener are:

1. $f_{u,tot}$ must remain below the stiffener compressive yield stress, F_{cy}
2. $f_{u,tot}$ must remain below the column buckling stress, calculated using the effective length from Equation 6.6.3-17 or 6.6.3-18.

Copyright 2016 Lockheed Martin Corporation.
Note: The current version is always the version on the Lockheed Martin network.

Compression Yield Check:
From Table 1b, the stiffener compression yield stress is: F_{cy}=64.9 psi
By inspection, stiffener compression yield is not critical.

Column Check:
The effective column length for a double-sided stiffener is given by Equation 6.6.3-17(a).
From the Step (e) illustration, d=5.0 in, h= 12.00 in; d/h = 5.0 in / 12.00 in = 0.42, which is less than 1.5.

The effective column length is calculated using Equation 6.6.3-17(a):

$$L_e = \frac{h_u}{\sqrt{1 + k^2\left(3 - 2\frac{d}{h}\right)}}$$

From the Step (e) illustration, the stiffener height is: h_u = 11.50 in
From Step (i), the diagonal tension factor is: k=0.33

$$L_e = \frac{11.50\ in}{\sqrt{1 + (0.32)^2\left(3 - 2 \times \frac{5.0\ in}{12.00\ in}\right)}} = 10.40\ in$$

From Step (b), the radius of gyration is: ρ_u=0.5260 in; the stiffener slenderness ratio is:

$$\frac{L_e}{\rho_u} = \frac{10.40\ in}{0.5260\ in} = 19.77$$

The column curve is generated using IDAT SM83 (v1.0), whose output is shown as follows. The curve uses 160° F properties.

Open Section Column Analysis V1.0
Material(s): 1) 85 T
7050-T7451 PLATE | 2.001-3. | B BASIS | 160 F | 0.5 hr | No Spec
FTU= 66.3 ksi FCY= 61.0 ksi EC=10342. RONC= 19.0 FCMAX= 64.8 ksi

Copyright 2016 Lockheed Martin Corporation.
Note: The current version is always the version on the Lockheed Martin network.

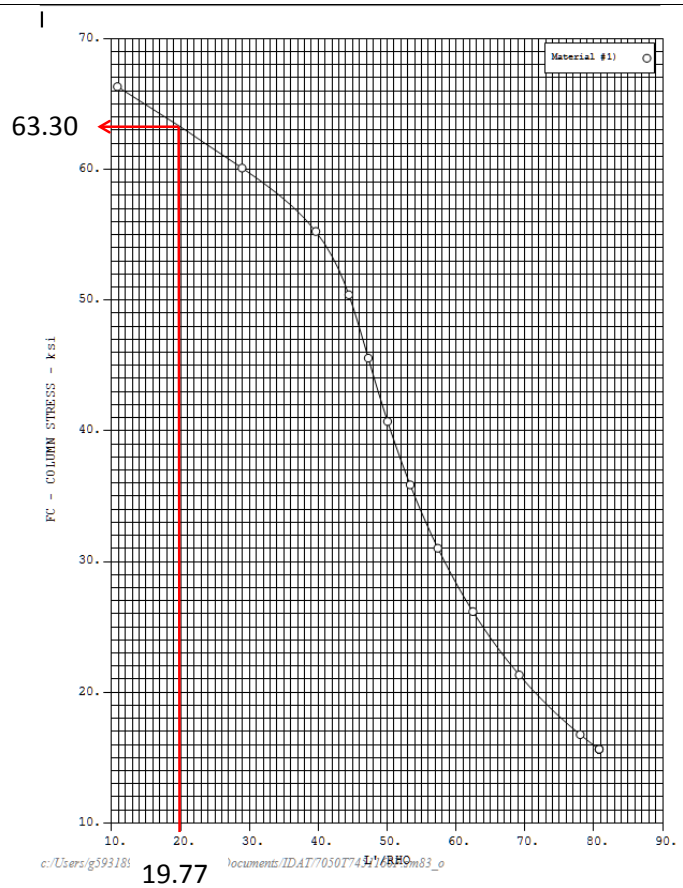

From the column curve above, the allowable stress is 63.3 ksi at 160° F. The column buckling stress is:

$$F_{col} = 63.3\ ksi$$

The margin of safety for column buckling is calculated using Equation 6.6.3-19:

$$MS_{ult} = \frac{F_{col}}{f_{u,tot}} = \frac{63{,}300\ psi}{8{,}646\ psi} - 1 = +6.32$$

r) Determine the stiffener margin of safety for crippling:

Per Section 6.6.4.2.1, a crippling analysis for the stiffener is required using the methods from Section 8.4. The maximum total stiffener compression stress is the maximum compression stress in the stiffener, $f_{u,max}$, plus the compression stress due to curvature, $f_{u,r}$.

From Step (k): $f_{u,max}$= -10,038 psi; from Step (p): $f_{u,r}$= -1,099 psi

The maximum total stiffener compression stress is:

$$f_{u,\max(tot)} = f_{u,max} + f_{u,r} = -10{,}038\ psi — 1{,}099\ psi = -11{,}137\ psi$$

This stress acts on an effective crippling section which includes portions of effective web:

Copyright 2016 Lockheed Martin Corporation.
Note: The current version is always the version on the Lockheed Martin network.

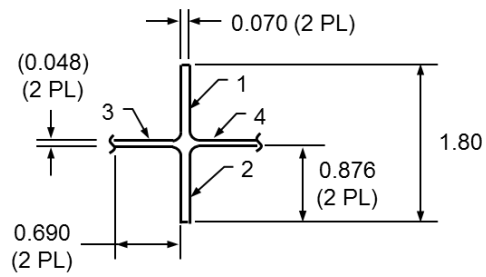

Using Figure 6.6.1-6, the effective width of web is the lesser of 15(t) or d_c / 6:
From Step (a), the adjusted web thickness is: t=0.046 in
From the Step (e) illustration, d_c = 4.93 in

$$15 \times t = 15 \times 0.046\ in = 0.690\ in$$

$$\frac{d_c}{6} = \frac{4.93\ in}{6} = 0.82\ in$$

The effective web portion is: b_{eff} =0.690 in

The total area of the effective crippling section is:

$$A_{u,cc} = B_u t_u + 2\ b_{eff} t = 1.80\ in(0.070\ in) + 2 \times 0.690\ in \times 0.046\ in = 0.1895\ in^2$$

The total load acting on the effective section is:

$$P_{u,\max(tot)} = f_{u,\max(tot)} A_{u,cc} = -11{,}137\ psi \times 0.1895\ in^2 = -2{,}110\ lb$$

The allowable crippling load is calculated as described in Section 8.4:

Element Number	b, in	t, in	b/t	b(t), in^2	Edge Condition[1]	F_{cc}, ksi[2]	b(t)Fcc, lb
1	0.878	0.070	12.54	0.0615	One Edge Free	40.739	2,505
2	0.878	0.070	12.54	0.0615	One Edge Free	40.739	2,505
3	0.690	0.046	15.00	0.0317	One Edge Free	36.409	1,154
4	0.690	0.046	15.00	0.0317	One Edge Free	36.409	1,154
Summation				0.1864			7,318

The crippling stress for the section is calculated using Equation 8.4.0-1:

$$F_{cc} = \frac{\Sigma(b\ t\ F_{cc})}{\Sigma(b\ t)} = \frac{7{,}318\ lb}{0.1864\ in^2} = 39{,}260 \text{ psi}$$

The crippling load for the section is calculated using Equation 8.4.0-2:

$$P_{cc} = F_{cc} A_{u,cc} = 39{,}260 \text{ psi}(0.1895\ in^2) = 7{,}440\ lb$$

The crippling margin of safety is calculated using Equation 8.4.0-3:

$$MS_{ult} = \frac{P_{cc}}{P_{u,\max(tot)}} = \frac{7{,}440\ lb}{2{,}110\ lb} - 1 = +2.53$$

[1] Due to the buckled web, the edge condition for Elements 3 and 4 are assumed to be One Edge Free.
[2] From IDAT SM110 v1.4, 7050-T7451 plate 2.0-3.0 in, B-basis at 160° F; T-direction properties.

Copyright 2016 Lockheed Martin Corporation.
Note: The current version is always the version on the Lockheed Martin network.

s) Determine the required minimum moment of inertia for the stiffeners:

The procedure to determine the required moment of inertia is given in Section 6.6.1.10.
From the Step (h), the shear buckling coefficient is k_{ss}=5.65
The minimum required inertia for the stiffener is obtained using Equation 6.6.1-2:

$$\frac{I_{stiffener}}{d\,t^3} = \frac{0.0217}{\left(\frac{d}{h\sqrt{k_{ss}}}\right)^{8/3}}$$

Centerline dimensions are used in the required inertia calculation and are obtained from the Step (e) illustration:
d = 5.0 in, h_e = 11.75 in, t = 0.048 in
(Note that the actual web thickness is used; use of the adjusted thickness results in an unconservative required inertia)

$$\frac{I_{stiffener}}{d\,t^3} = \frac{0.0217}{\left(\frac{5.0\text{ in}}{11.75\text{ in}\sqrt{5.65}}\right)^{8/3}} = 2.132$$

The required stiffener inertia calculation includes correction to 160° F, using properties from Tables 1a and 1b:

$$I_{stiffener} = 2.132(d)(t)^3\left(\frac{E_t(RT)}{E_t(160°F)}\right) = 2.132(5.0\text{ in})(0.048\text{ in})^3\left(\frac{10.3\text{ msi}}{10.05\text{ msi}}\right) = 0.001208\text{ in}^4$$

From Step (b), the stiffener moment of inertia about the centroidal axis parallel to the web is: I_u = 0.0340 in^4, which exceeds the required value. Note that the 0.070 in stiffener thickness meets the minimum requirements from Table 6.6.1-2.

Copyright 2016 Lockheed Martin Corporation.
Note: The current version is always the version on the Lockheed Martin network.

t) Determine the primary bending stresses in the flanges:

Stresses are calculated at Sections A-A and E-E in Bay F:

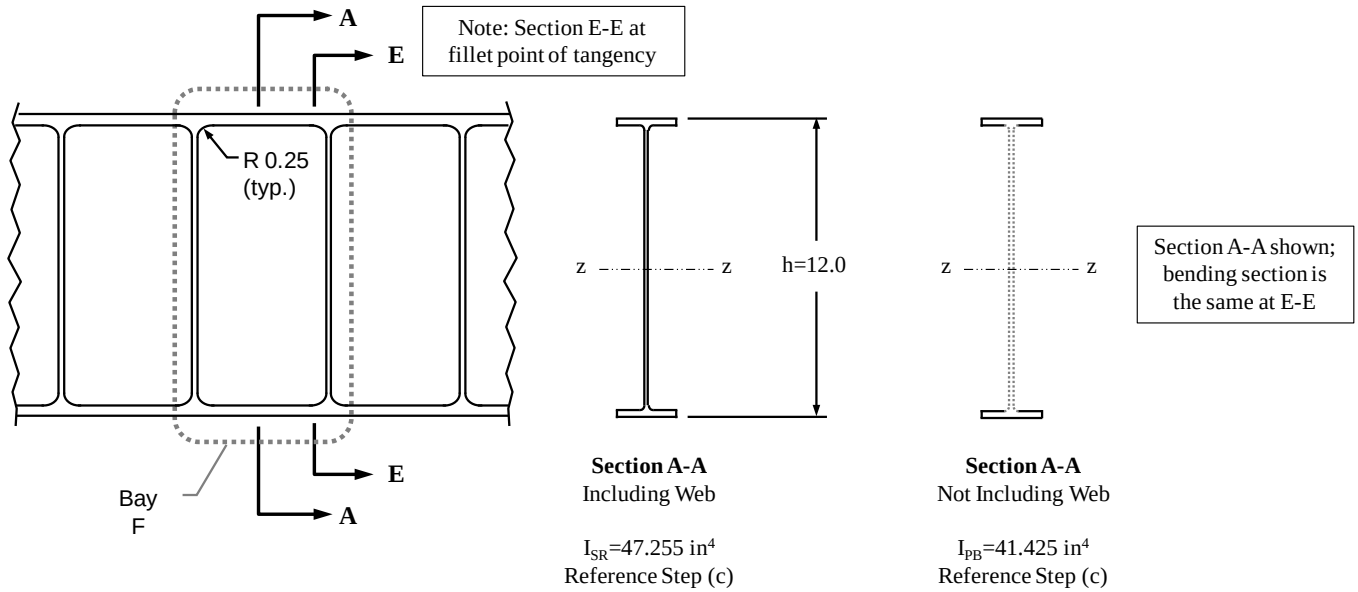

From the problem statement, the externally applied shear load is: V=12,000 lb. The maximum bending moments acting at Sections A-A and F-F are:

Section A-A, x=27.5 in:

$$M_{A-A} = V(x) = 12{,}000\ lb(27.5\ in) = 330{,}000\ in\text{-}lb$$

Section E-E, x=30.0 in – 0.070 in / 2 – 0.25 in = 29.715 in

$$M_{E-E} = V(x) = 12{,}000\ lb(29.715\ in) = 356{,}580\ in\text{-}lb$$

The flange bending stresses are calculated at the flange OML and IML:

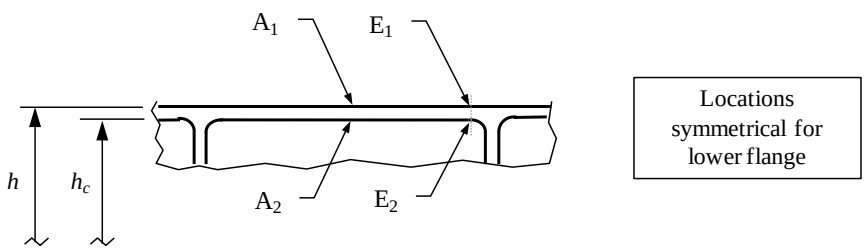

<u>Flange primary bending stresses as a shear resistant beam:</u>

The bending moment at the point of web buckling is the portion carried as a shear resistant beam, calculated using Equation 6.6.3-37(a):

$$M_{SR} = M(1-k)$$

From Step (i), the Diagonal Tension Factor is: k = 0.32:

$$M_{SR}^{A-A} = 330{,}000\ in\text{-}lb(1-0.32) = 224{,}400\ in\text{-}lb$$

$$M_{SR}^{E-E} = 356{,}580\ in\text{-}lb(1-0.32) = 242{,}474\ in\text{-}lb$$

Copyright 2016 Lockheed Martin Corporation.
Note: The current version is always the version on the Lockheed Martin network.

The shear resistant bending stresses at the flange OML and IML are calculated using Equation 6.6.3-38(a):

$$Flange\ OML: f_{b,SR} = \frac{M_{SR}(h/2)}{I_{SR}}; \quad Flange\ IML: f_{b,SR} = \frac{M_{SR}(h_c/2)}{I_{SR}}$$

From the Step (e) illustration, the flange OML and IML heights are: h=12.0 in, h_c=11.5 in
From the Step (c), the beam moment of inertia including the web is: I_{SR} = 47.255 in^4
The shear resistant bending stresses at the upper and lower flange OML are:

$$Point\ A_1: f_{b,SR}^{A-A} = \frac{224{,}400\ in\text{-}lb(12.0\ in/2)}{47.255\ in^4} = \pm 28{,}492\ psi$$

$$Point\ A_2: f_{b,SR}^{A-A} = \frac{224{,}400\ in\text{-}lb(11.50\ in/2)}{47.255\ in^4} = \pm 27{,}305\ psi$$

$$Point\ E_1: f_{b,SR}^{E-E} = \frac{242{,}474\ in\text{-}lb(12.0\ in/2)}{47.255\ in^4} = \pm 30{,}787\ psi$$

$$Point\ E_2: f_{b,SR}^{E-E} = \frac{242{,}474\ in\text{-}lb(11.5\ in/2)}{47.255\ in^4} = \pm 29{,}504\ psi$$

<u>Flange primary bending stresses as a post-buckled beam:</u>

The bending moment beyond the point of web buckling is the portion carried as a post-buckled beam, calculated using Equation 6.6.3-37(b):

$$M_{PB} = M(k)$$

From Step (i), the Diagonal Tension Factor is: k = 0.32:

$$M_{PB}^{A-A} = 330{,}000\ in\text{-}lb(0.32) = 105{,}600\ in\text{-}lb$$

$$M_{PB}^{E-E} = 356{,}580\ in\text{-}lb(0.32) = 114{,}106\ in\text{-}lb$$

The post-buckled bending stresses at the flange OML and IML are calculated using Equation 6.6.3-38(b):

$$Flange\ OML: f_{b,PB} = \frac{M_{PB}(h/2)}{I_{PB}}; \quad Flange\ IML: f_{b,PB} = \frac{M_{PB}(h_c/2)}{I_{PB}}$$

From the Step (e) illustration, the flange OML and IML heights are: h=12.0 in, h_c=11.5 in
From the Step (c), the beam moment of inertia not including the web is: I_{PB} = 41.425 in^4
The post-buckled bending stresses at the upper and lower flange OML are:

$$Point\ A_1: f_{b,PB}^{A-A} = \frac{105{,}600\ in\text{-}lb(12.0\ in/2)}{41.425\ in^4} = \pm 15{,}295\ psi$$

$$Point\ A_2: f_{b,PB}^{A-A} = \frac{105{,}600\ in\text{-}lb(11.50\ in/2)}{41.425\ in^4} = \pm 14{,}658\ psi$$

$$Point\ E_1: f_{b,PB}^{E-E} = \frac{114{,}106\ in\text{-}lb(12.0\ in/2)}{41.425\ in^4} = \pm 16{,}527\ psi$$

$$Point\ E_2: f_{b,PB}^{E-E} = \frac{114{,}106\ in\text{-}lb(11.50\ in/2)}{41.425\ in^4} = \pm 15{,}838\ psi$$

<u>Total flange primary bending stresses:</u>

The primary flange bending stresses are the sum of the shear resistant and post-buckled flange bending stresses. The primary bending stresses are calculated using Equation 6.6.3-39.

$$f_{b,pr} = f_{b,SR} + f_{b,PB}$$

At the upper flange OML:

$$Point\ A_1: f_{b,pr}^{A-A} = -28{,}492\ psi - 15{,}295\ psi = -43{,}787\ psi$$

Copyright 2016 Lockheed Martin Corporation.
Note: The current version is always the version on the Lockheed Martin network.

At the upper flange IML:

$Point\ A_2$: $f_{b,pr}^{E-E} = -27{,}305\ psi - 14{,}658\ psi = -41{,}963\ psi$

At the upper flange OML:

$Point\ E_1$: $f_{b,pr}^{A-A} = -30{,}787\ psi - 16{,}527\ psi = -47{,}314\ psi$

At the upper flange IML:

$Point\ E_2$: $f_{b,pr}^{E-E} = -29{,}504\ psi - 15{,}838\ psi = -45{,}342\ psi$

At the lower flange OML:

$Point\ A_1$: $f_{b,pr}^{A-A} = 28{,}492\ psi + 15{,}295\ psi = 43{,}787\ psi$

At the lower flange IML:

$Point\ A_2$: $f_{b,pr}^{E-E} = 27{,}305\ psi + 14{,}658\ psi = 41{,}963\ psi$

At the lower flange OML:

$Point\ E_1$: $f_{b,pr}^{A-A} = 30{,}787\ psi + 16{,}527\ psi = 47{,}314\ psi$

At the lower flange IML:

$Point\ E_2$: $f_{b,pr}^{E-E} = 29{,}504\ psi + 15{,}838\ psi = 45{,}342\ psi$

The primary bending stresses are shown below for reference:

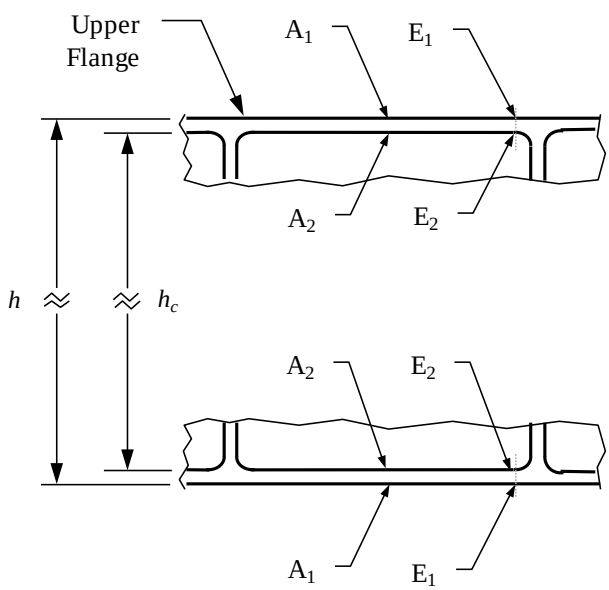

Upper Flange	
Point	$f_{b,pr}$ (psi)
A_1	-43,787
A_2	-41,963
E_1	-47,314
E_2	-45,342

Lower Flange	
Point	$f_{b,pr}$ (psi)
A_1	43,787
A_2	41,963
E_1	47,314
E_2	45,342

Copyright 2016 Lockheed Martin Corporation.
Note: The current version is always the version on the Lockheed Martin network.

u) Determine the secondary bending stresses in the flanges:

Using Equation 6.6.3-40(a), the secondary bending moment acting on the flange at the center of the bay (Section A-A) is:

$$M_{sec}^{A-A} = -\frac{1}{24}\, k\, f_s\, t\, d^2 C_3$$

Using Equation 6.6.4-2, the secondary bending moment acting on the flange at the fillet tangency (Section E-E) is:

$$M_{sec}^{E-E} = \frac{1}{12}\, k\, f_s\, t\, C_3 (6x_f^2 + d^2 - 6x_f d)$$

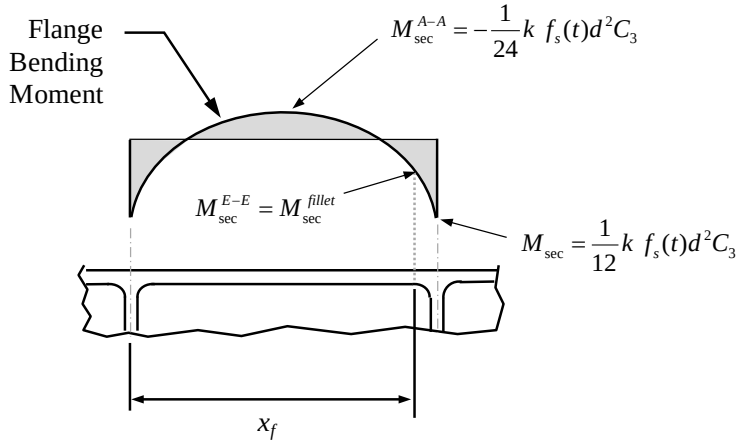

x_f = d – t_u /2 – R_{fillet} , where: t_u = 0.070 in and R_{fillet} = 0.25 in (from Figure 1)
x_f = 5.0 in – 0.070 in / 2 – 0.25 in = 4.72 in
From Step (i), the Diagonal Tension Factor is: k = 0.32
From Step (g), the web shear stress is: f_s = 22,196 psi
From Figure 1, the web thickness is: t=0.048 in (nominal is used)
From Figure 1, the bay width is: d=5.0 in
From Step(d), the Flange Flexibility Factor is: ωd=3.145. Using Figure 6.6.3-10, the stress concentration factor C_3=0.84.

$$M_{sec}^{A-A} = -\frac{1}{24}\,(0.32)(22{,}196\ psi)(0.048\ in)(5.0\ in)^2(0.84) = -298\ in\text{-}lb$$

$$M_{sec}^{E-E} = \frac{1}{12}\,(0.32)(22{,}196\ psi)(0.048\ in)(0.84)[6(4.72\ in)^2 + (5.0\ in)^2 - 6(4.72\ in)(5.0\ in)] = 407\ in\text{-}lb$$

The flange secondary bending stress is calculated using Equation 6.6.3-41:

$$f_{b,sec} = \frac{M_{sec}(y'_{bar})}{I_{cap}}$$

From Step (b), y'_{bar}=0.125 in, I_{cap}=0.003125 in^4

$$f_{b,sec}^{A-A} = \frac{-298\ in\text{-}lb(0.125\ in)}{0.003125\ in^4} = \pm 11{,}920\ psi$$

$$f_{b,sec}^{E-E} = \frac{407\ in\text{-}lb(0.125\ in)}{0.003125\ in^4} = \pm 16{,}280\ psi$$

The flange secondary bending stresses acting on the upper flange are as shown. Note that the stresses act symmetrically on the lower flange.

Copyright 2016 Lockheed Martin Corporation.
Note: The current version is always the version on the Lockheed Martin network.

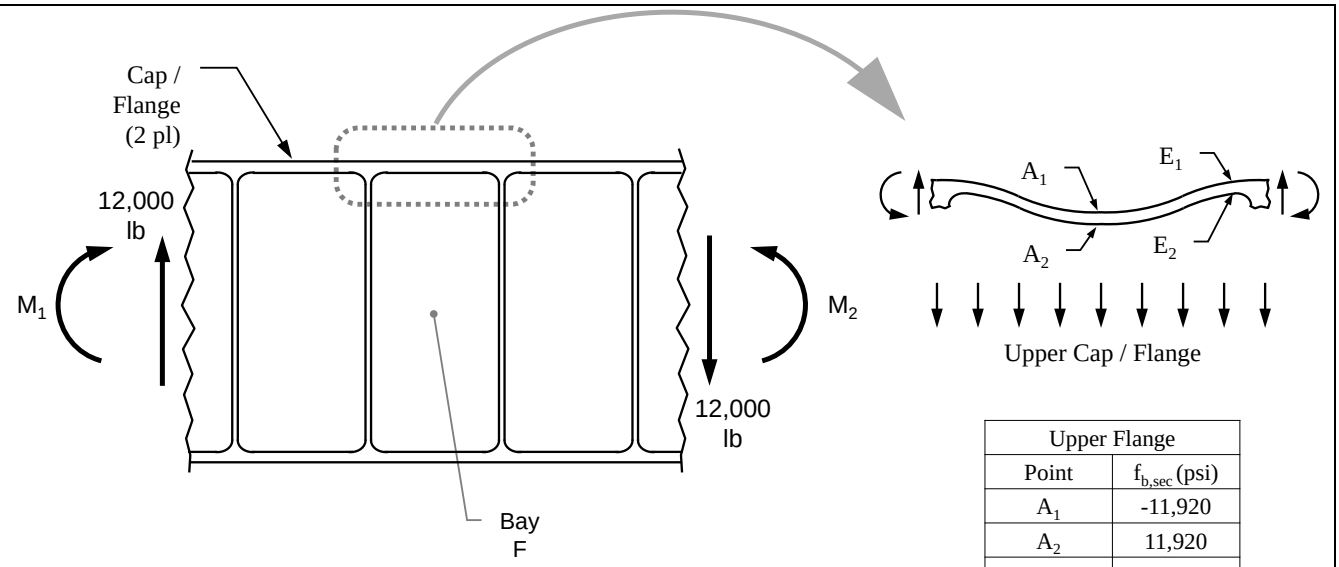

Upper Flange	
Point	$f_{b,sec}$ (psi)
A_1	-11,920
A_2	11,920
E_1	16,280
E_2	-16,280

v) Determine the secondary axial stresses in the flanges:

Using Equation 6.6.3-42, the secondary compression load in the upper and lower flanges due to tension field action is:

$$P_{sec} = -\frac{kV}{2\tan\alpha}$$

From Step (i), the Diagonal Tension Factor is: k = 0.32

From the problem statement, the externally applied shear load is: V=12,000 lb

From Step (l), the Diagonal Tension Angle is: $\alpha = 42.1°$

The secondary compression load in the upper and lower flanges at Sections A-A and E-E is:

$$P_{sec}^{A-A} = P_{sec}^{E-E} = -\frac{0.32(12{,}000\ lb)}{2\tan(42.1°)} = -2{,}125\ lb$$

Using Equation 6.6.3-43, the secondary compression stress in the upper and lower flanges is:

$$f_{a,sec} = \frac{P_{sec}}{A_{cap}}$$

From Step (b), the upper and lower flange areas are is: $A_{cap} = 0.600\ in^2$

The secondary compression stress in the upper and lower flanges at Sections A-A and E-E is:

$$f_{a,sec}^{A-A} = f_{a,sec}^{E-E} = \frac{-2125\ lb}{0.600\ in^2} = -3{,}542\ psi$$

The secondary compressive stresses in the flanges are as shown:

Copyright 2016 Lockheed Martin Corporation.
Note: The current version is always the version on the Lockheed Martin network.

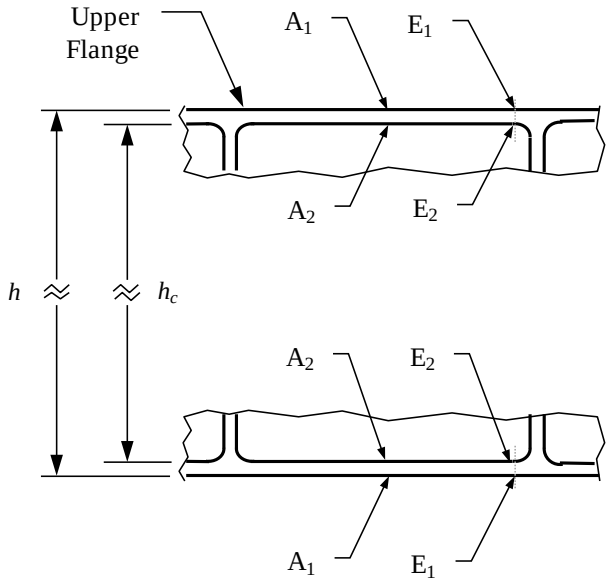

Upper Flange	
Point	$f_{a,sec}$ (psi)
A_1	-3,542
A_2	-3,542
E_1	-3,542
E_2	-3,542

Lower Flange	
Point	$f_{a,sec}$ (psi)
A_1	-3,542
A_2	-3,542
E_1	-3,542
E_2	-3,542

w) Determine the total stresses acting on the flanges:

The total flange stresses are the sum of the primary and secondary flange stresses from Steps (t), (u) and (v), calculated using Equation 6.6.3-44:

$$f_{b,tot} = f_{b,pr} + f_{b,sec} + f_{a,sec}$$

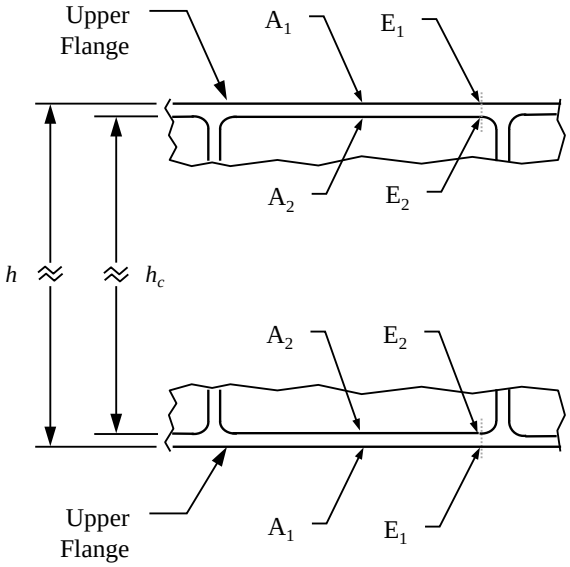

Upper Flange				
Point	$f_{b,pr}$ (psi), Step (t)	$f_{b,sec}$ (psi), Step (u)	$f_{a,sec}$ (psi), Step (v)	f_{tot} (psi), Steps (t)+(u)+(v)
A_1	-43,787	-11,920	-3,542	-59,249
A_2	-41,963	11,920	-3,542	-33,585
E_1	-47,314	16,280	-3,542	-34,576
E_2	-45,342	-16,280	-3,542	**-65,164**

Lower Flange				
Point	$f_{b,pr}$ (psi), Step (t)	$f_{b,sec}$ (psi), Step (u)	$f_{a,sec}$ (psi), Step (v)	f_{tot} (psi), Steps (t)+(u)+(v)
A_1	43,787	-11,920	-3,542	28,325
A_2	41,963	11,920	-3,542	50,341
E_1	47,314	16,280	-3,542	**60,052**
E_2	45,342	-16,280	-3,542	25,520

The upper flange IML (Point E_2) and lower flange OML (Point E_1) at Section E-E are most critical for this example.

Copyright 2016 Lockheed Martin Corporation.
Note: The current version is always the version on the Lockheed Martin network.

x) Determine the strength and stability margins of safety for the upper and lower flanges:

Upper Flange Strength: Checked using the minimum of the crippling stress definition and F_{cu}. The crippling stress is calculated for the effective flange section shown; this includes a width of web, b_{eff}, calculated in Step (r):

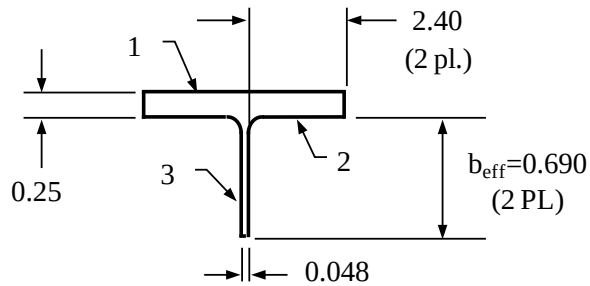

The allowable crippling stress is calculated as described in Section 8.4:

Element Number	b, in	t, in	b/t	b(t), in^2	Edge Condition[19]	F_{cc}, ksi[20]	b(t)Fcc, lb
1	1.165	0.250	4.66	0.291	One Edge Free	68.052	19,803
2	1.165	0.250	4.66	0.291	One Edge Free	68.052	19,803
3	0.690	0.046	15.00	0.032	One Edge Free	34.412	1,101
Summation				0.614			40,707

The crippling stress for the section is calculated using Equation 8.4.0-1:

$$F_{cc} = \frac{\Sigma(b\ t\ F_{cc})}{\Sigma(b\ t)} = \frac{40{,}707\ lb}{0.614\ in^2} = 66{,}298 \text{ psi}$$

From Table 1b, F_{cu} = 64,200 psi, which is slightly less than the allowable crippling stress, F_{cc}. The upper flange strength margin of safety is calculated using Equation 6.6.3-45, with F_{cu} substituted for the crippling strength, F_{cc}:

$$MS_{ult} = \frac{F_{cu}}{f_{b,tot}} - 1$$

From Step (w), the maximum upper flange compression stress is at the Section E-E IML: $f_{b,tot}$ = -65,164 psi.

$$MS_{ult} = \frac{64{,}200\ psi}{65{,}164\ psi} - 1 = -0.01$$

Since bending through the thickness comprises part of the total upper flange stress, plastic analysis is used to obtain a positive strength margin of safety. From Step (x), the total axial stress at the flange IML is:

$$f_b = f_{b,pr} + f_{a,sec} = -45{,}342\ psi - 3{,}542\ psi = -48{,}884\ psi$$

The upper flange axial stress ratio is:

$$R_a = \frac{f_b}{F_{cu}} = \frac{48{,}884\ psi}{64{,}200\ psi} = 0.761$$

The upper flange bending stress ratio is:

$$R_b = \frac{M}{M_{all}}$$

From Step (u), the upper flange secondary bending moment is: M_{sec} = 407 in-lb

From IDAT PLASBEND v2.3a, the allowable plastic moment for the upper flange is: M_{all} = 2,479 lb at 160° F

[19] Due to the buckled web, the edge condition for Elements 3 and 4 are assumed to be One Edge Free.

[20] From IDAT SM110 v1.4, 7050-T7451 plate 1.5 in – 2.0 in, B-basis at 160° F; L-direction properties.

Copyright 2016 Lockheed Martin Corporation.
Note: The current version is always the version on the Lockheed Martin network.

$$R_b = \frac{407\ in\text{-}lb}{2{,}479\ in\text{-}lb} = 0.164$$

From Section 2.5.2, Case 10, the margin of safety using a compression-bending interaction expression is:

$$MS_{ult} = \frac{1}{R_a + R_b} - 1 = \frac{1}{0.761 + 0.164} - 1 = +0.08$$

<u>Upper Flange Stability:</u> Checked using the flange buckling stress:

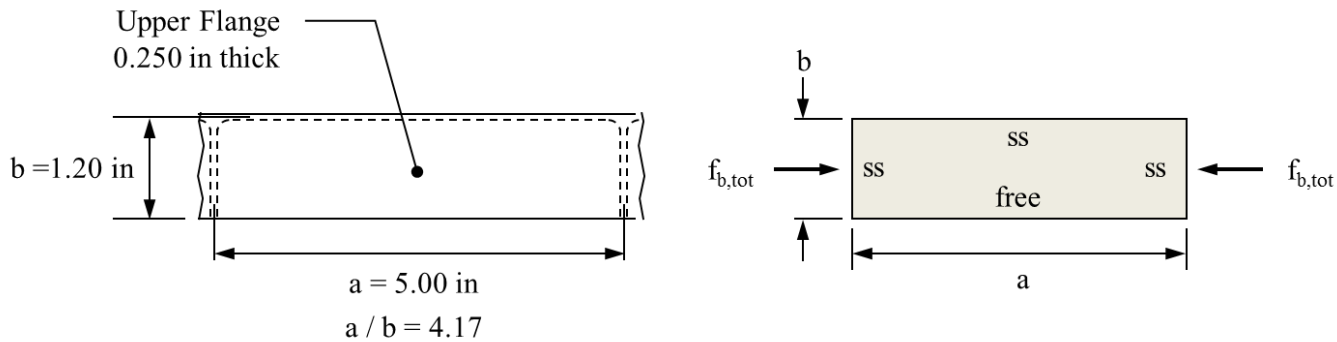

The compression buckling coefficient is obtained from Figure 10.3.2-1, with a/b = 4.17: $k_c = 0.48$
Using Equation 10.3.1-5, the flange buckling coefficient is:

$$K = \frac{k_c \pi^2}{12(1 - \upsilon_e^2)} = \frac{0.48\ \pi^2}{12(1 - 0.33^2)} = 0.443$$

Using Equation 10.3.1-4, the effective b/t ratio is:

$$\left(\frac{b}{t}\right)_e = \frac{b}{t\sqrt{K}} = \frac{1.20\ in}{0.25\ in\sqrt{0.443}} = 7.21$$

IDAT SM33 v1.1 is used to generate the buckling curve for the 7050-T7451 plate at 160°F, as shown below.

Copyright 2016 Lockheed Martin Corporation.
Note: The current version is always the version on the Lockheed Martin network.

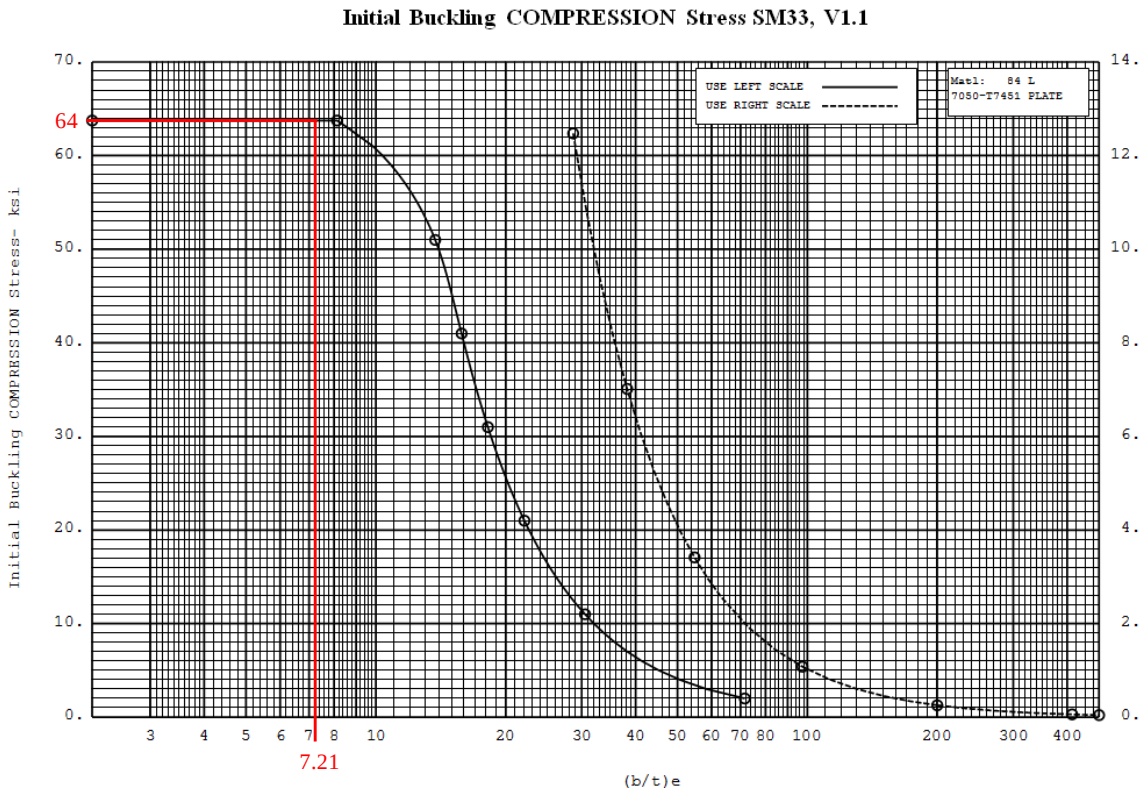

From the SM33 curve, F_c = 64.0 ksi at 160°F.

Using Equation 6.6.3-46, the upper flange buckling margin of safety is:

$$MS_{ult} = \frac{F_c}{f_{tot}} - 1$$

The stress at the mid-bay is used for the flange stability analysis. From Step (w), the upper flange compression stresses at Section A-A are:

Point A_1: f_{tot} = -59,249 psi

Point A_2: f_{tot} = -33,585 psi

The average stress (at the flange mid-thickness) is:

$$f_{tot} = \frac{-59{,}249\ psi - 33{,}585\ psi}{2} = -46{,}417\ psi$$

The upper flange buckling margin of safety is:

$$MS_{ult} = \frac{64{,}000\ psi}{46{,}417\ psi} - 1 = +0.38$$

<u>Lower Flange Strength:</u> Checked using Equation 6.6.3-47:

$$MS_{ult} = \frac{F_{tu}}{f_{b,tot}} - 1$$

From Table 1b, F_{tu}=67.20 ksi

From Step (w), the maximum lower flange tension stress is at the Section E-E OML: $f_{b,tot}$ = 60,052 psi.

$$MS_{ult} = \frac{67{,}200\ psi}{60052\ psi} - 1 = +0.12$$

Copyright 2016 Lockheed Martin Corporation.
Note: The current version is always the version on the Lockheed Martin network.

The Margins of Safety are summarized as shown:

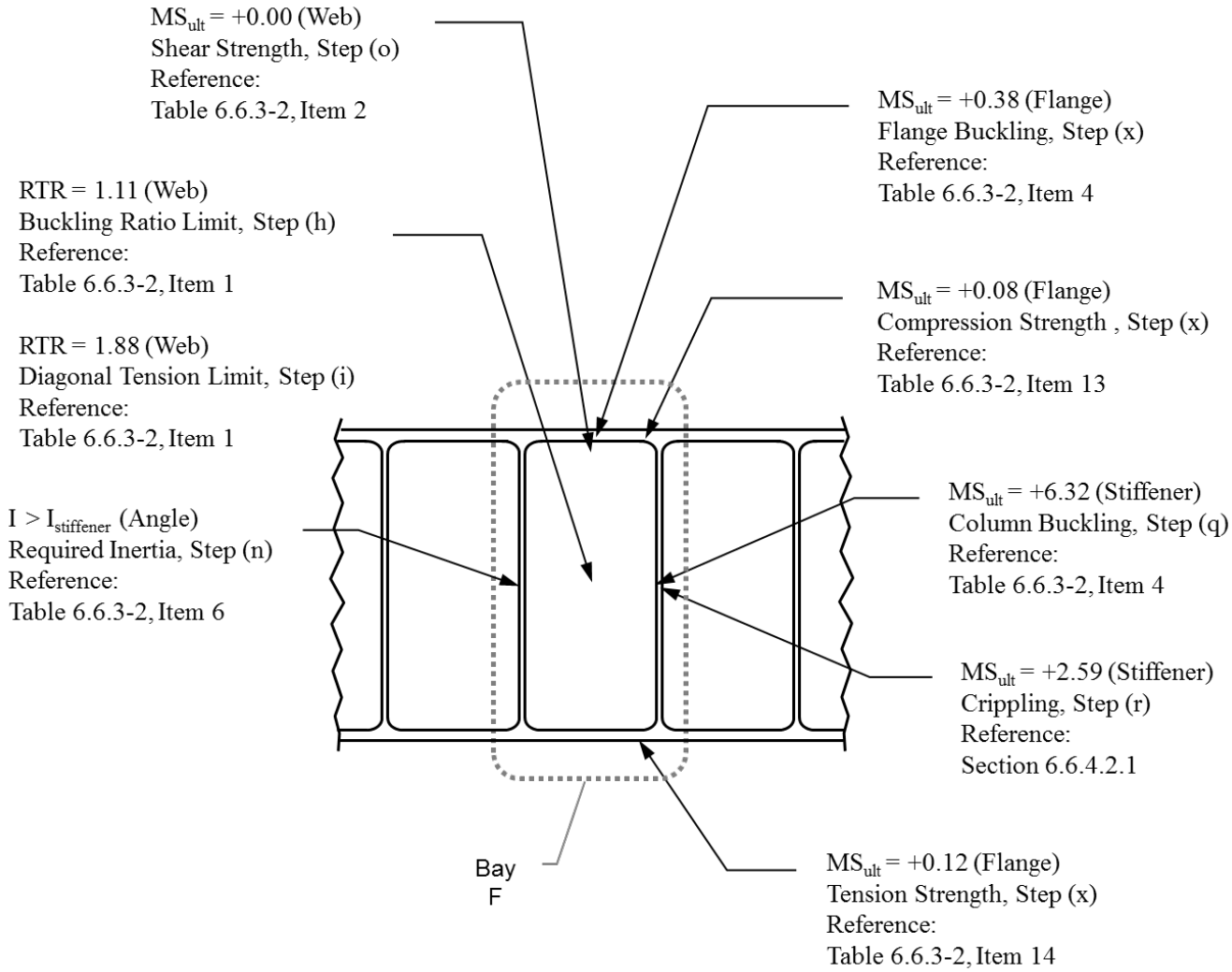

Note that the Margins of Safety are shown as calculated numerically, even where they are high (usually greater than +1.00 or +2.00). Refer to program policy regarding the reporting of high margins.

Copyright 2016 Lockheed Martin Corporation.
Note: The current version is always the version on the Lockheed Martin network.

6.6.5 Intermediate Diagonal Tension Beams – Analysis for Multiple Load Components

For beams covered in Sections 6.6.2 through 6.6.4, the externally applied loading is shear only; all flange and stiffener internal loads are a result of this shear. When additional load components are applied, modifications to the IDT method are required to accurately perform the strength and stability analyses. The fundamental assumption is that the web carries all components of load up to its buckling point. Beyond the web buckling point, all additional load components are redistributed directly into the surrounding structure, namely, flanges and stiffeners. In a hand analysis, this is accomplished through statics, ensuring that force and moment equilibrium are maintained after load redistribution. The total beam internal loads include the primary and secondary loads from Sections 6.6.3 and 6.6.4 plus those due to the additional load components.

A generalized free body for a beam including all load components is shown in Figure 6.6.5-1.

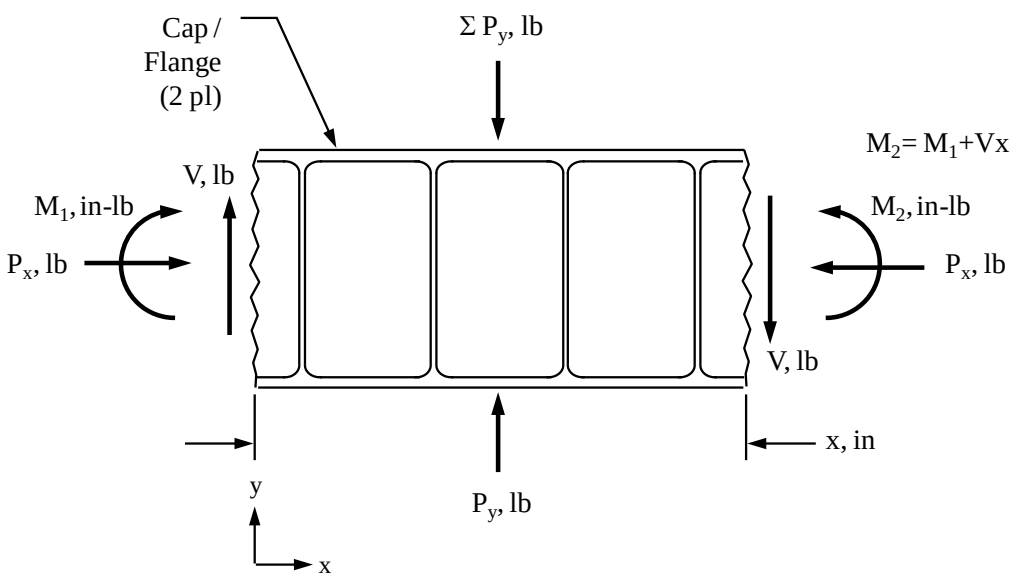

Figure 6.6.5-1: Generalized Free Body for Post-Buckled Beam

In Figure 6.6.5-1, M_1 is the externally applied bending moment. M_2 is the total bending moment, which is the sum of the externally applied moment and the moment due to the applied shear.

The required modifications to the methods described in Sections 6.6.3 and 6.6.4 are summarized in the following sections.

6.6.5.1 Post-Buckled Beams –Web Analysis

The equations and figures from Section 6.6.3.1 are expanded to treat multiple load components, as described in this section.

6.6.5.1.1 Post-Buckled Beams –Web Stability

All in-plane load components which may act on the web are shown in Figure 6.6.5-2. Note that uniaxial tension loading is neglected in the web stability analysis.

Copyright 2016 Lockheed Martin Corporation.
Note: The current version is always the version on the Lockheed Martin network.

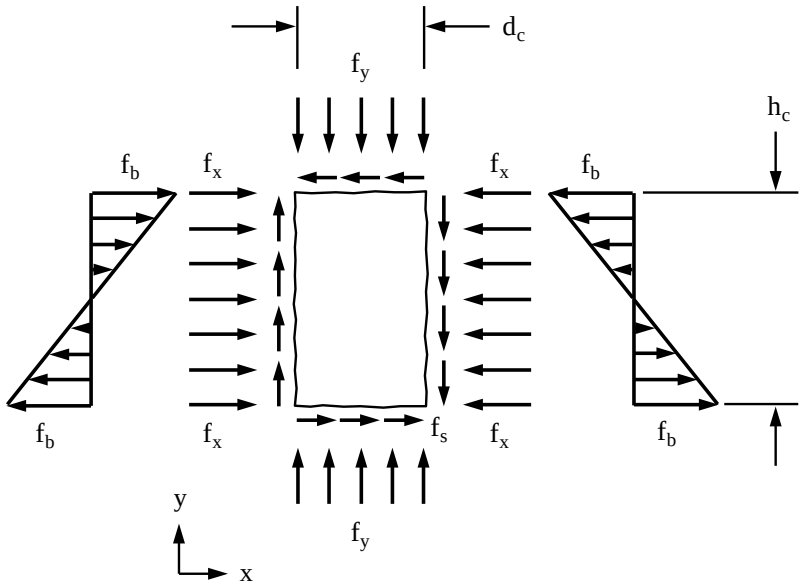

Figure 6.6.5-2: Generalized Free Body Web Stresses for Stability Analysis

The web combined buckling ratio for all load components shown in Figure 6.6.5-2 is given by Equation 6.6.5-1.

$$R_{bar} = \frac{1}{2}\left[R_x + R_y + \sqrt{(R_x + R_y)^2 + 4(R_s^2 + R_b^2)}\right] \qquad \textbf{Equation 6.6.5-1}$$

Where:
R_x is the buckling stress ratio for uniaxial compression loading in the beam x direction
R_y is the buckling stress ratio for uniaxial compression loading in the beam y direction
R_s is the buckling stress ratio for shear loading
R_b is the buckling stress ratio for bending loading using the externally applied moment only

The individual buckling ratios are calculated in accordance with Table 6.6.5-1. Note that each individual value of F_{cr} includes plasticity correction as applicable.

Table 6.6.5-1: Individual Buckling Ratios for Multiple Load Components

Buckling Ratio Equation	Reference Section for F_{cr}	Edge Condition
$R_x = f_x/F_{x,cr}$	10.3.2-1	Simply Supported [1]
$R_y = f_y/F_{y,cr}$	10.3.2-1	Simply Supported [1]
$R_s = f_s/F_{s,cr}$	6.6.3-1	From Figure 6.6.3-4(b)
$R_b = f_b/F_{b,cr}$	10.3.2-3	Simply Supported [1]

[1] Unless some level of rotational fixity is justified by program policy or analysis

The Ratio-To-Requirement (RTR) is equal to the combined buckling ratio, R_{bar}.

Energy method and finite-element stability solutions express buckling results in terms of the eigenvalue, commonly denoted by the symbol λ. The value of the eigenvalue is the reciprocal of R_{bar}. For example, a solution using IDAT SS8, So0 or NASTRAN Solution 105 provides an eigenvalue of 0.20 when the buckling ratio, R_{bar}, is 5.0.

Copyright 2016 Lockheed Martin Corporation.
Note: The current version is always the version on the Lockheed Martin network.

6.6.5.1.2 Post-Buckled Beams –Web Strength

The web strength analysis uses the web peak shear stress from Equation 6.6.3-10 and superimposes the uniaxial and bending stresses developed prior to web buckling. To develop the stresses acting on the web for analysis, consider all components without redistribution, as shown in Figure 6.6.5-3. The critical locations for analysis are shown as Points A and B.

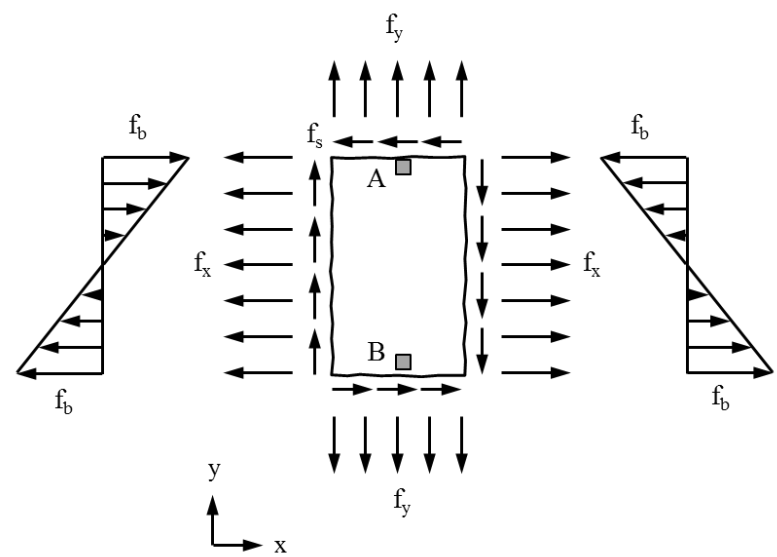

Figure 6.6.5-3: Generalized Free Body Web Stresses for Strength Analysis

The uniaxial and bending stresses developed as a shear resistant beam are given in Equation 6.6.5-2.

$$f_{i,SR} = f_i\left(\frac{1}{R_{bar}}\right) \qquad \textbf{Equation 6.6.5-2}$$

Where:
f_i is the uniaxial or bending stress, f_x, f_y or f_b, as applicable, without redistribution, using the externally applied bending moment only (psi)
R_{bar} is the combined buckling ratio from Equation 6.6.5-1

The web state of stress includes the peak shear stress, $f_{s,max}$, and the applicable shear resistant uniaxial stresses from Equation 6.6.5-2. The stresses used in the web strength analysis are shown in Figure 6.6.5-4.

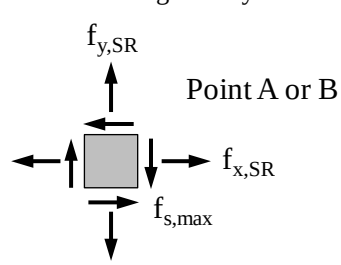

Figure 6.6.5-4: Generalized Free Body Web Stresses for Strength Analysis

The web strength margin of safety is written using the appropriate interaction expression from Section 2.5. Stress ratios are determined for each applicable stress component. The shear stress ratio uses $f_{s,max}$ and the allowable web shear stress from Equation 6.6.3-11, including the RS reduction factor if the shear strength in the L and LT direction

Copyright 2016 Lockheed Martin Corporation.
Note: The current version is always the version on the Lockheed Martin network.

differ. In determining stress ratios for the uniaxial terms, note that some materials have differing longitudinal and transverse material properties.

6.6.5.2 Post Buckled Beams – Stiffener Analysis

The stiffener strength and stability analyses use the average and maximum stiffener stresses from Equations 6.6.3-14 (or -15) and 6.6.3-20 and superimpose the uniaxial compression[21] and bending stresses developed after web buckling. Compression stresses due to beam curvature or thermal effects are additionally superimposed.

The load redistributed to each vertical stiffener after web buckling is given by Equation 6.6.5-3.

$$P_{u,PB} = f_y \, d \, t \left(1 - \frac{1}{R_{bar}}\right) \qquad \textbf{Equation 6.6.5-3}$$

Where:
f_y is the uniaxial stress in the beam y-direction, without redistribution (psi)
d is the stiffener spacing (in)
t is the web thickness (in)
R_{bar} is the combined buckling ratio from Equation 6.6.5-1

Equation 6.6.5-3 assumes equal uniaxial stress, stiffener spacing and skin thickness in the bays to the left and right of the stiffener. If this is not the case, the average values for the two adjacent bays are used in calculating $P_{u,PB}$. The beam y-direction uniaxial loads before and after redistribution are shown in Figure 6.6.5-5. Note that the post-buckled portion of the y-direction load creates additional flange bending stresses, which are discussed in Section 6.6.5.4.

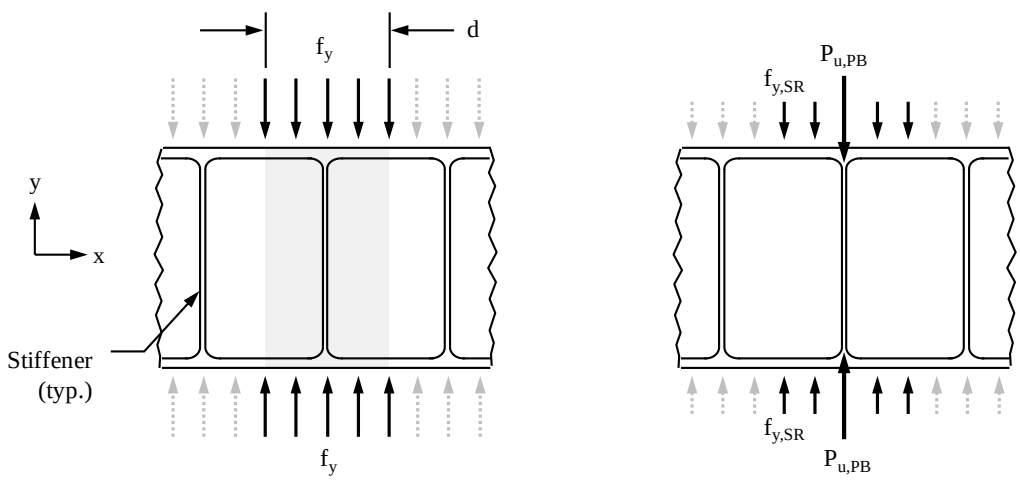

Web and Stiffener Loading, Before Redistribution

Web and Stiffener Loading, After Redistribution

Figure 6.6.5-5: Stiffener Load Redistribution in a Post-Buckled Beam

The stiffener compression stress due to load redistribution to each vertical stiffener is given by Equation 6.6.5-4. This stress is additive to the average and maximum stiffener stresses from Equations 6.6.3-14 (or -15) and 6.6.3-20.

$$f_{u,PB} = \frac{P_{u,PB}}{A_u} \qquad \textbf{Equation 6.6.5-4}$$

Where:
$P_{u,PB}$ is the post-buckled stiffener load from Equation 6.6.5-3 (psi)

[21] There is no redistribution for web uniaxial tension components.

Copyright 2016 Lockheed Martin Corporation.
Note: The current version is always the version on the Lockheed Martin network.

A_u is the stiffener cross-sectional area (in^2)

Once the total compression stresses in the stiffeners are known, the strength and stability checks of Sections 6.6.3 and 6.6.4 are made.

6.6.5.3 Post Buckled Beams – Joint Analysis

Most built-up beams are used on earlier aircraft designs and are usually configured such that the methods from Section 6.6.3 are sufficient to perform the strength analysis. Analysis for multiple load components is most common on integrally machined beams, which have no interior joints. For built-up beams with multiple load components, free body diagrams of each joint should be constructed which include all primary and secondary load components acting on the structure. The joint loads will vary in magnitude and in some cases, direction, depending upon the particular set of applied loads. The secondary joint loading due to the IDT loading only is given in Section 6.6.3. Additional components are combined through superposition.

6.6.5.4 Post Buckled Beams – Flange Analysis

The flange strength analyses use the stresses from Section 6.6.3.4 and superimpose the uniaxial and bending stresses developed after web buckling. Compression stresses due to thermal effects are additionally superimposed.

The beam x-direction uniaxial load redistributed to each flange after web buckling is given by Equation 6.6.5-5.

$$P_{f,PB} = 0.5\, f_x\, h\, t \left(1 - \frac{1}{R_{bar}}\right) \qquad \textbf{Equation 6.6.5-5}$$

Where:
f_x is the uniaxial stress in the beam x-direction, without redistribution (psi)
h is the beam height (in)
t is the web thickness (in)
R_{bar} is the combined buckling ratio from Equation 6.6.5-1

The flange compression stress due to x-direction uniaxial load redistribution is given by Equation 6.6.5-6. This stress is additive to the primary and secondary flange stresses from Equations 6.6.3-39 and 6.6.3-43. The stress is compressive for upper and lower flanges.

$$f_{f,PB} = \frac{P_{f,PB}}{A_{cap}} \qquad \textbf{Equation 6.6.5-6}$$

Where:
$P_{f,PB}$ is the post-buckled flange load from Equation 6.6.5-5 (psi)
A_{cap} is the cap (flange) cross-sectional area (in^2)

The externally applied bending moment (in the x-direction) includes shear resistant and post-buckled contributions. Note that the externally applied moment does not include from the primary bending moment due to the applied shear load.

$$M_e = M_{e,SR} + M_{e,PB}$$

$$M_{e,SR} = M_e \left(\frac{1}{R_{bar}}\right) \qquad \textbf{Equation 6.6.5-7(a)}$$

$$M_{e,PB} = M_e \left(1 - \frac{1}{R_{bar}}\right) \qquad \textbf{Equation 6.6.5-7(b)}$$

Where:
M_e is the externally applied moment, separate from the moment due to external shear (in-lb)
$M_{e,SR}$ is the shear resistant portion of the externally applied moment (in-lb)
$M_{e,PB}$ is the post-buckled portion of the externally applied moment (in-lb)

Copyright 2016 Lockheed Martin Corporation.
Note: The current version is always the version on the Lockheed Martin network.

The shear resistant portion of the applied moment acts on the entire beam cross section, while the post buckled portion acts on the cross section excluding the web. The bending stresses for the shear resistant and post-buckled moments are given by Equation 6.6.5-8.

$$f_{be,SR} = \frac{M_{e,SR}(y)}{I_{SR}} \qquad \textbf{Equation 6.6.5-8(a)}$$

$$f_{be,PB} = \frac{M_{e,PB}(y)}{I_{PB}} \qquad \textbf{Equation 6.6.5-8(b)}$$

Where:
$M_{e,SR}$ and $M_{e,PB}$ are the shear resistant and post-buckled bending moments from Equation 6.6.5-7
y is the distance from the beam neutral axis to the analysis location (in)
I_{SR} is the shear resistant beam moment of inertia (in^4)
I_{PB} is the post-buckled beam moment of inertia (in^4)

The uniaxial compression loading in the beam y-direction creates local bending moments in the flange after web buckling. The flange bending occurs as the post-buckled portion of the y-direction load transfers to the stiffener. The resulting bending distribution in the flange is similar to that due to diagonal tension from Section 6.6.3.4. The bending moment distribution due to y-direction loading is shown in Figure 6.6.5-6. Note that the flange bending moments are ignored when the y-direction loads are tensile.

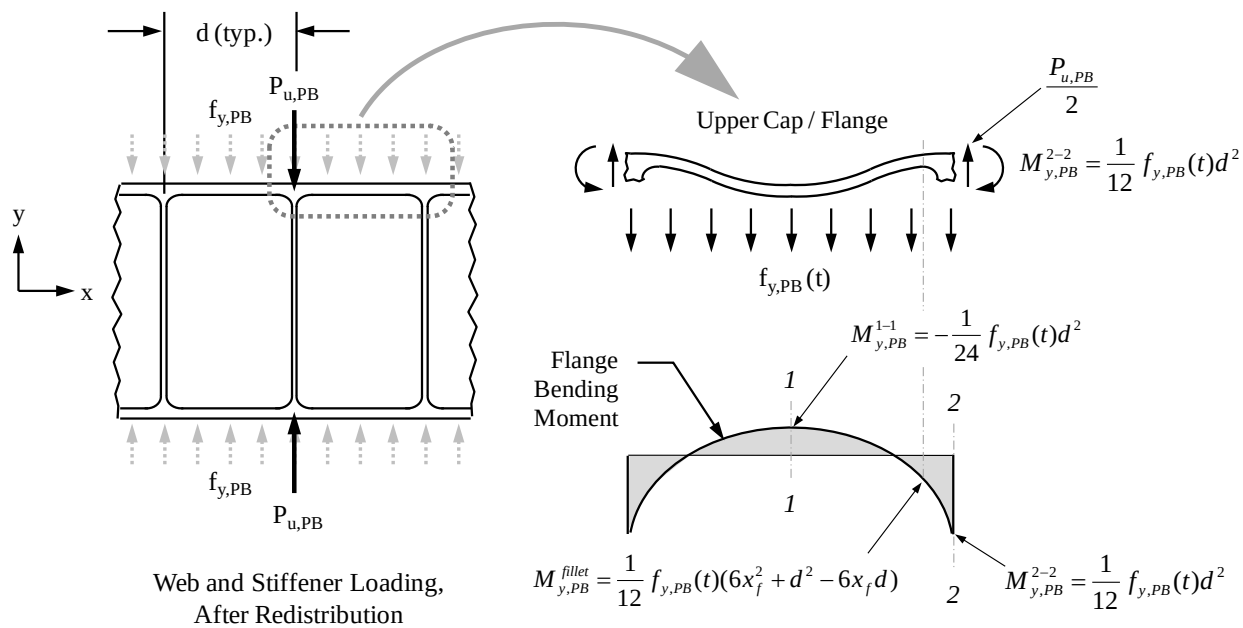

Figure 6.6.5-6: Flange Bending Moments Due to y-Direction Loading in a Post-Buckled Beam

The beam y-direction post-buckled compression stress is given by Equation 6.6.5-9. Note that the formulation is similar to Equation 6.6.5-3.

$$f_{y,PB} = f_y\left(1 - \frac{1}{R_{bar}}\right) \qquad \textbf{Equation 6.6.5-9}$$

Copyright 2016 Lockheed Martin Corporation.
Note: The current version is always the version on the Lockheed Martin network.

The flange secondary bending moments due to the y-direction post-buckled load are given by Equation 6.6.5-10.

$$M_{y,PB}^{1-1} = -\frac{1}{24}\ f_{y,PB}\ t\ d^2 \qquad \textbf{Equation 6.6.5-10(a)}$$

$$M_{y,PB}^{2-2} = \frac{1}{12}\ f_{y,PB}\ t\ d^2 \qquad \textbf{Equation 6.6.5-10(b)}$$

$$M_{y,PB}^{fillet} = \frac{1}{12}\ f_{y,PB}\ t(6x_f^2 + d^2 - 6x_f d) \qquad \textbf{Equation 6.6.5-10(c)}$$

Where:
$f_{y,PB}$ is the beam y-direction post-buckled compression stress, from Equation 6.6.5-9 (psi)
t is the web thickness (in)
d is the stiffener spacing (in)
x_f is the dimension to the fillet tangency, as shown in Figure 6.6.4-3 (in)

The flange secondary bending stress due to the y-direction post-buckled load is given by Equation 6.6.5-11(a).

$$f_{b_{y,PB}} = \frac{M_{y,PB}(y'_{bar})}{I_{cap}} \qquad \textbf{Equation 6.6.5-11(a)}$$

For configurations with a pad-up at the flange, shown in Figure 6.6.4-2(b), the bending stress at the pad run-out is given by Equation 6.6.5-11(b).

$$f_{b_{y,PB}} = \frac{M_{y,PB}(h - y'_{bar})}{I_{cap}} \qquad \textbf{Equation 6.6.5-11(b)}$$

Where:
$M_{y,PB}$ is the flange secondary bending moment due to the y-direction post-buckled load, from Equation 6.6.5-10 (psi)
y'_{bar} is the distance from the flange extreme fiber to the neutral axis, as shown in Figure 6.6.4-2 (in)
h is the cap height, as shown in Figure 6.6.4-2(b) (in)

The <u>total flange stresses</u> are the sum of the primary and secondary flange stresses given by Equation 6.6.5-12. The equation references for each flange stress component are listed in Table 6.6.5-2.

$$f_{b,tot} = f_{b,pr} + f_{b,sec} + f_{a,sec} + f_{f,PB} + f_{be} + f_{b_{y,PB}} \qquad \textbf{Equation 6.6.5-12}$$

Table 6.6.5-2: Components of Flange Stress for a Beam with Multiple Load Components

Flange Stress Component	Reference Equation
$f_{b,pr}$	6.6.3-39
$f_{b,sec}$	6.6.3-41
$f_{a,sec}$	6.6.3-43
$f_{f,PB}$	6.6.5-6
f_{be}	6.6.5-8
$f_{b_{y,PB}}$	6.6.5-11

Copyright 2016 Lockheed Martin Corporation.
Note: The current version is always the version on the Lockheed Martin network.

6.6.5.5 Example Calculation – Intermediate Diagonal Tension Beam Strength Analysis, Integrally Machined Beam

Given:
The machined beam from Example 6.6.4.5 is subject to the combined load set shown in Figure 1.

Assume:
1. The beam is part of a fatigue and stiffness critical assembly.
2. The part is machined with a thickness tolerance of +/- 0.007 in.
3. The beam is restrained against lateral displacement.
4. The longitudinal grain direction is beam spanwise for all components except the stiffeners.
5. The beam operating temperature is 160° F.
6. Ultimate load = 1.5 (Limit Load)

Determine the strength margins of safety for Bay F at Ultimate load.

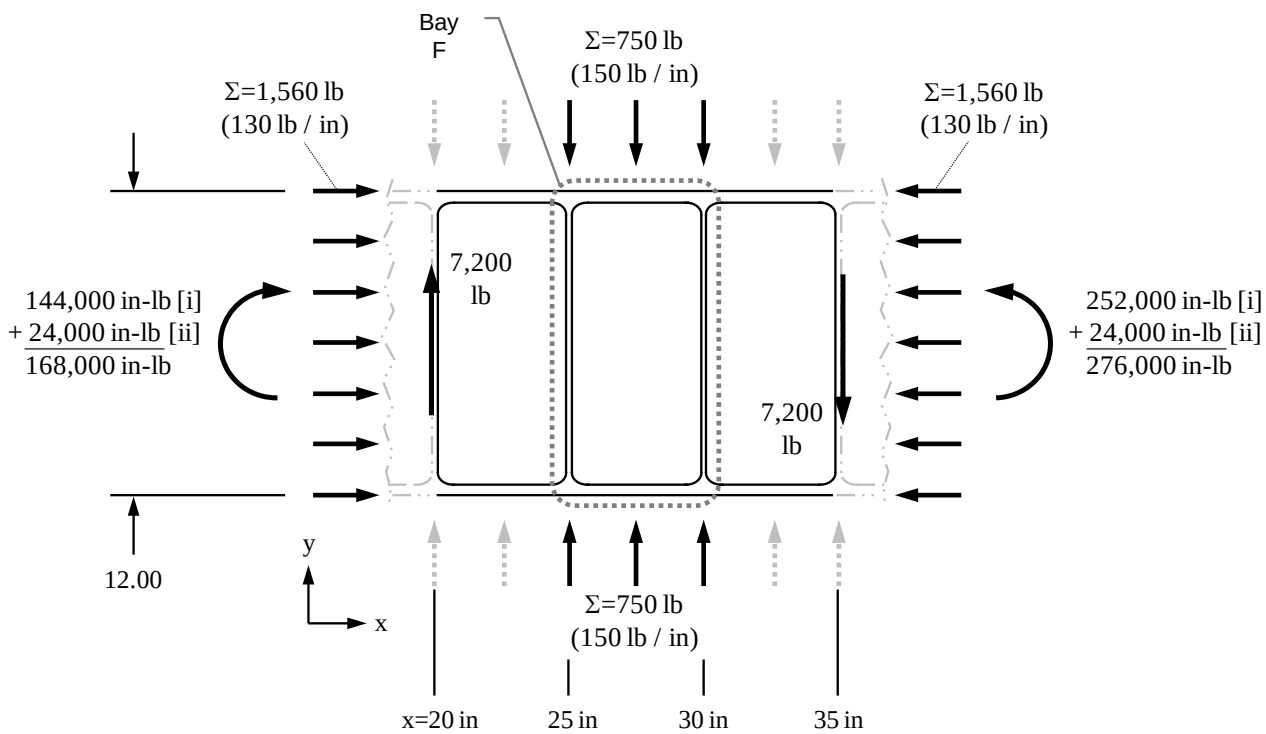

[i] Moment due to shear only: M = 7,200 lb • x
[ii] Additional applied moment

Figure 1: Beam Configuration

Copyright 2016 Lockheed Martin Corporation.
Note: The current version is always the version on the Lockheed Martin network.

Table 1a: Beam Material Properties at Room Temperature [1]

Item	Material	E_t, msi	E_c, msi	F_{tu}, ksi	F_{ty}, ksi	F_{cu}, ksi [2]	F_{cy}, ksi	F_{su}, ksi	F_{sy}, ksi [2]	F_{bru}, ksi	F_{bry}, ksi [2]	F_{pl_t}, ksi	F_{pl_c}, ksi
Machining - L Direction	7050-T7451 Plate, 2.00-3.00 Thick, B-Basis	10.30	10.60	76.00	66.00	73.70	64.00	44.00	35.70	146.00	107.00	56.40	54.70
Machining - T Direction	7050-T7451 Plate, 2.00-3.00 Thick, B-Basis	10.30	10.60	76.00	66.00	79.50	69.00	38.00	32.40	146.00	107.00	57.60	60.20

Table 1b: Beam Material Properties at 160° F [1]

Item	Material	E_t, msi	E_c, msi	F_{tu}, ksi	F_{ty}, ksi	F_{cu}, ksi [2]	F_{cy}, ksi	F_{su}, ksi	F_{sy}, ksi [2]	F_{bru}, ksi	F_{bry}, ksi [2]	F_{pl_t}, ksi	F_{pl_c}, ksi
Machining - L Direction	7050-T7451 Plate, 2.00-3.00 Thick, B-Basis	10.05	10.34	67.20	63.90	64.20	61.00	38.00	33.70	127.30	99.20	54.60	52.10
Machining - T Direction	7050-T7451 Plate, 2.00-3.00 Thick, B-Basis	10.05	10.34	67.20	62.90	69.20	64.90	33.60	30.70	127.30	99.20	54.90	56.60

[1] Reference IDAT METDB v3.3b
[2] Calculated using IDAT METDB v3.3b per PM4057 Section 3

Solution Step:

a) Determine analysis thickness adjustments due to +/- 0.007 in machining tolerance:

From Example 6.6.4.5 Step (a), the only feature requiring analysis thickness adjustment (due to machining tolerance) is the web. The nominal thickness of the web is 0.048 +/- 0.007 in, resulting in the analysis thickness of 0.046 in.

b) Determine section properties of the caps and stiffeners:

The section properties of the caps and stiffeners are obtained from Example 6.6.4.5, Step (b).

Caps:

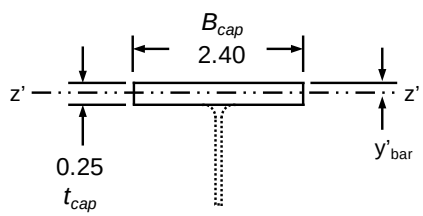

Nominal dimensions shown. From Figure 1, machining thickness tolerance is +/- 0.007.

From Step (a), no thickness tolerance adjustment is required in the flange analysis.

$y'_{bar} = 0.125\ in$

$A_{cap} = 0.600\ in^2$

$I_{cap} = 0.003125\ in^4$

Stiffeners:

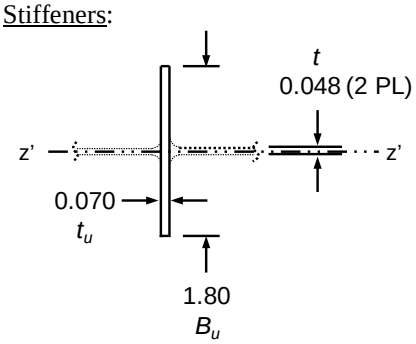

Nominal dimensions shown. From Figure 1, machining thickness tolerance is +/- 0.007.

From Step (a), no thickness tolerance adjustment is required in the stiffener analysis.

$A_u = 0.1228\ in^2$

$I_u = 0.0340\ in^4$

The radius of gyration about the z′ - z′ axis is:

$$\rho_u = \sqrt{\frac{I_u}{A_u}} = 0.5261\ in$$

Copyright 2016 Lockheed Martin Corporation.
Note: The current version is always the version on the Lockheed Martin network.

c) Determine the beam effective height and the beam moments of inertia before and after web buckling (with and without the web):

The beam heights and section properties are obtained from Example 6.6.4.5, Step (b).

Beam effective height (h_e):

$h_e = 11.75\ in$

Beam true web height (h_w):

$h_w = 11.50\ in$

(Note that for the machined beam the true web height is the same as the clear web height.)

The beam moment of inertia before buckling includes the contributions from the caps plus web:

$I_{SR} = 47.255\ in^4$

The beam moment of inertia after buckling includes the contributions from the caps only:

$I_{PB} = 41.425\ in^4$

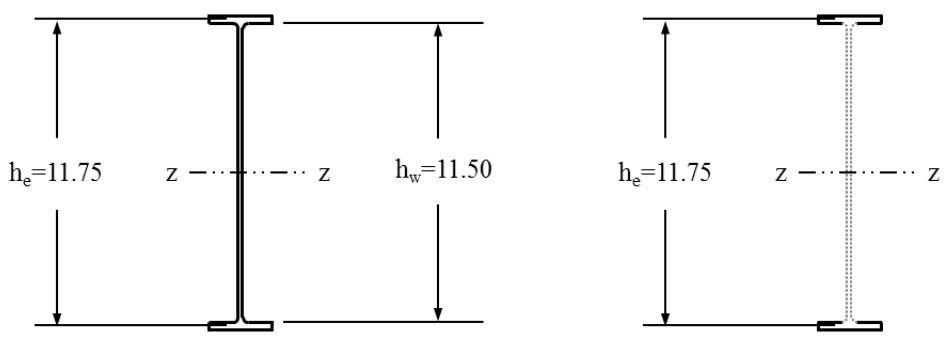

(a)
Beam Section
Including Web

I_{SR}=47.255 in^4

(b)
Beam Section
Not Including Web

I_{PB}=41.425 in^4

d) Determine the flange flexibility factor (ωd):

The flange flexibility factor is obtained from Example 6.6.4.5, Step (d).

Using Equation 6.6.3-8, the flange flexibility factor is:

$$\omega d = 0.707d\left[\frac{t}{(I_T + I_C)h_e}\right]^{1/4} = 3.145$$

Copyright 2016 Lockheed Martin Corporation.
Note: The current version is always the version on the Lockheed Martin network.

e) Summarize the beam geometry required for analysis using the dimensions from Figure 1 and the results from Step (d):

The beam geometry is unchanged from Example 6.6.4.5 and is shown below for reference.

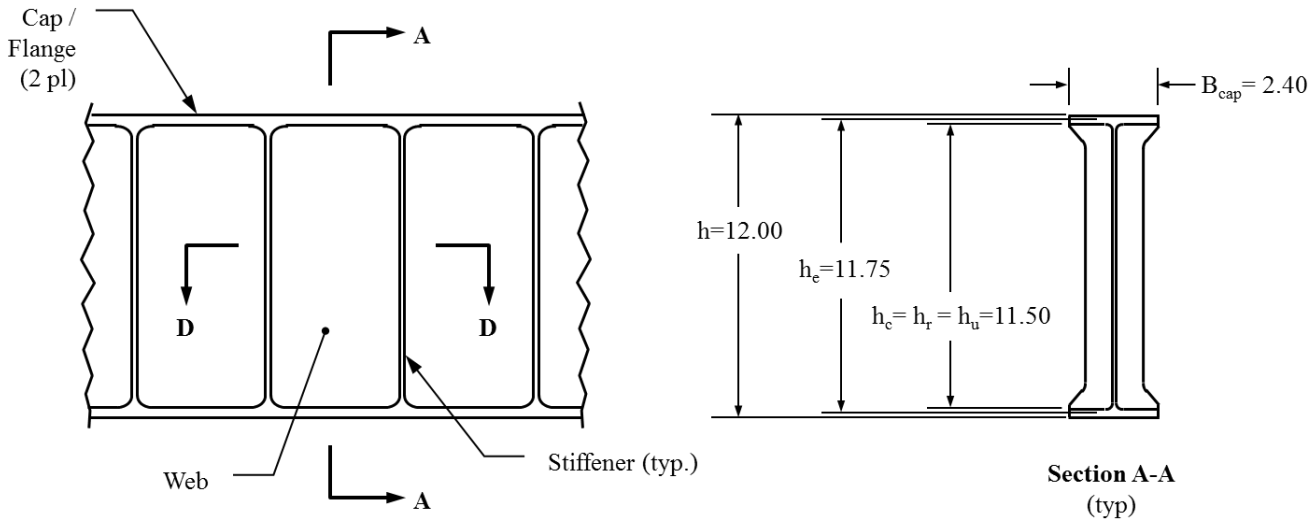

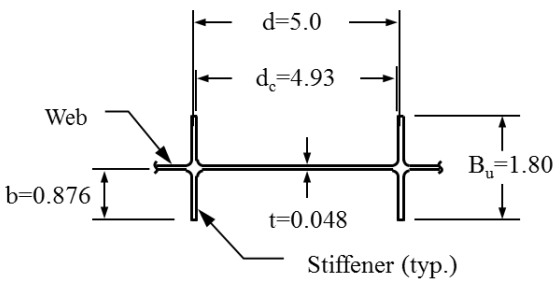

Section D-D

Nominal dimensions shown. A tolerance of +/- 0.007 in applies to all thickness dimensions.

f) Verify beam parameters are within the ranges specified in Table 6.6.4-1:

From Example 6.6.4.5, Step (f), the beam parameters are within the ranges of validity to ensure accuracy in the strength analyses.

Copyright 2016 Lockheed Martin Corporation.
Note: The current version is always the version on the Lockheed Martin network.

g) Determine the average shear stress acting on the web using the shear load V = 7,200 lb:

h_e = 11.75 in, from Step (c)

Using Equation 6.5.5-1, the average shear flow for the panel is:

$$q = \frac{V}{h_e} = \frac{7{,}200\ lb}{11.75\ in} = 613\ \ lb/in$$

Using Equation 6.5.5-1, the average shear stress for the panel is:

$$f_s = \frac{q}{t}$$

From Step (a), the adjusted web thickness is: t=0.046 in:

$$f_s = \frac{613\ lb/in}{0.046\ in} = 13{,}326\ psi$$

The beam weight efficiency index is not applicable due to the multiple components on externally applied load.

h) Determine the web buckling ratio for the beam shear load:

The initial buckling stress for Bay F is obtained from Example 6.6.4.5, Step (h).

$$F_{s,cr,el} = k_{ss}E\left(\frac{t}{d_c}\right)^2 = 4{,}944\ psi$$

From Table 1b, the proportional limit stress is 54,600 psi; no plasticity correction is required:

$$F_{s,cr} = 4{,}944\ psi$$

Using Equation 6.6.3-3, the buckling ratio is:

$$R_s = \frac{f_s}{F_{s,cr}}$$

From Step (g), the web average shear stress is: f_s=13,326 psi

$$R_s = \frac{13{,}326\ psi}{4{,}944\ \text{psi}} = 2.70$$

i) Determine the Diagonal Tension Factor Ratio-To-Requirement using the buckling ratio from Step (h):

From Step (h):

$$\frac{f_s}{F_{cr}} = 2.70$$

Using Equation 6.6.3-5, the diagonal tension factor, k is:

$$k = \tanh\left[0.5\ log_{10}\frac{f_s}{F_{s,cr}}\right] = \tanh[0.5\ log_{10}(2.70)] = 0.21$$

Thus, 21% of the applied shear load is carried by diagonal tension and 79% is carried by the shear-resistant panel.

<u>Allowable diagonal tension factor</u>:

Using Equation 6.6.3-6, the maximum permissible diagonal tension factor for the 0.046 in web is:

$$k_{all} = 0.78 - \sqrt{t - 0.012} = 0.78 - \sqrt{0.046 - 0.012} = 0.60$$

Using Equation 6.6.3-7, the diagonal tension Ratio-To-Requirement is:

$$RTR_k = \frac{k_{all}}{k} = \frac{0.60}{0.21} = 2.86 \geq 1.0$$

RTR_k is greater than 1.0, so the diagonal tension factor is acceptable.

Copyright 2016 Lockheed Martin Corporation.
Note: The current version is always the version on the Lockheed Martin network.

j) Determine the web buckling ratio for the beam x-direction axial load:

From Figure 1, the x-direction web axial loading is -130 lb/in; the axial stress is:

$$f_x = \frac{N_x}{\mathrm{t}} = \frac{-130\ lb/in}{0.046\ \mathrm{in}} = -2{,}826\ psi$$

The initial buckling stress is obtained using the methods from Section 10.3.2.1. The web dimensions, obtained from Step (e), are: d_c = 4.93 in, h_c = 11.50 in

Using Figure 10.3.2-3, with a/b = d_c/h_c = 0.429, the web buckling coefficient using the simply supported curve is: k_c = 1.38

The effective buckling coefficient, K, using Equation 10.3.1-5 is:

$$K = \frac{k_c \pi^2}{12(1-\nu_e^2)} = \frac{1.38\ \pi^2}{12(1-0.33^2)} = 1.27$$

Using Equation 10.3.2-2, the effective b/t ratio is:

$$\left(\frac{b}{t}\right)_e = \left(\frac{a}{t\sqrt{K}}\right) = \left(\frac{4.93}{0.046\ in\ \sqrt{1.27}}\right) = 95.1$$

The buckling curve generated using IDAT SM33 (v1.1) is shown below. The curve uses 160° F properties.

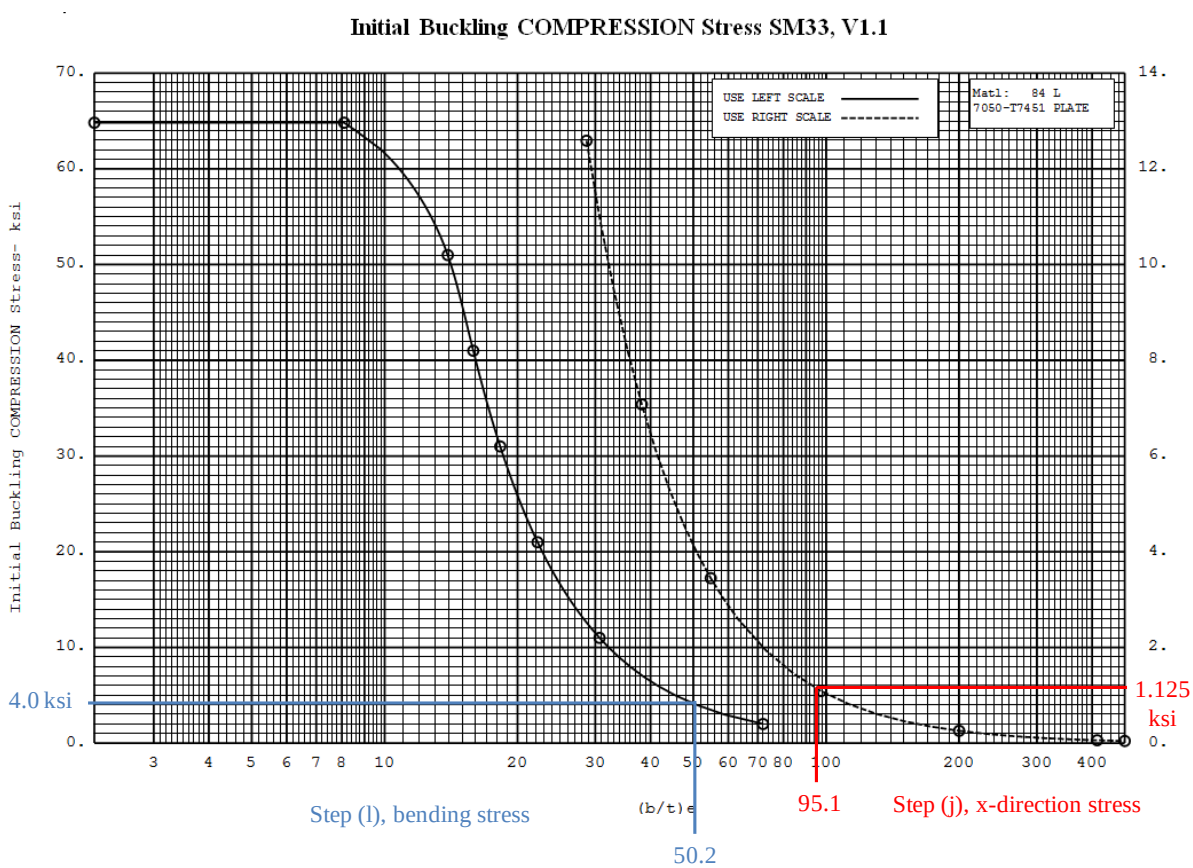

The buckling stress for the x-direction loading is:

$$F_{x,cr} = 1{,}125\ psi$$

Using Table 6.6.5-1, the buckling ratio is:

$$R_x = \frac{f_x}{F_{x,cr}} = \frac{2{,}826\ psi}{1{,}125\ \mathrm{psi}} = 2.51$$

Copyright 2016 Lockheed Martin Corporation.
Note: The current version is always the version on the Lockheed Martin network.

k) Determine the web buckling ratio for the beam y-direction axial load:

From Figure 1, the y-direction web axial loading is -150 lb/in; the axial stress is:

$$f_y = \frac{N_y}{\mathrm{t}} = \frac{-150\ lb/in}{0.046\ \mathrm{in}} = -3{,}261\ psi$$

The initial buckling stress obtained using the methods from Section 10.3.2.1. The web dimensions, obtained from Step (e), are: d_c = 4.93 in, h_c = 11.50 in

Using Figure 10.3.2-1, with a/b = h_c/d_c = 2.33, the web buckling coefficient using the simply supported curve is: k_c = 4.1

The effective buckling coefficient, K, using Equation 10.3.1-5 is:

$$K = \frac{k_c \pi^2}{12(1-\nu_e^2)} = \frac{4.1\ \pi^2}{12(1-0.33^2)} = 3.78$$

Using Equation 10.3.1-4, the effective b/t ratio is:

$$\left(\frac{b}{t}\right)_e = \left(\frac{b}{t\sqrt{K}}\right) = \left(\frac{4.93}{0.046\ in\ \sqrt{3.78}}\right) = 55.1$$

The buckling curve generated using IDAT SM33 (v1.1) is shown below. The curve uses 160° F properties.

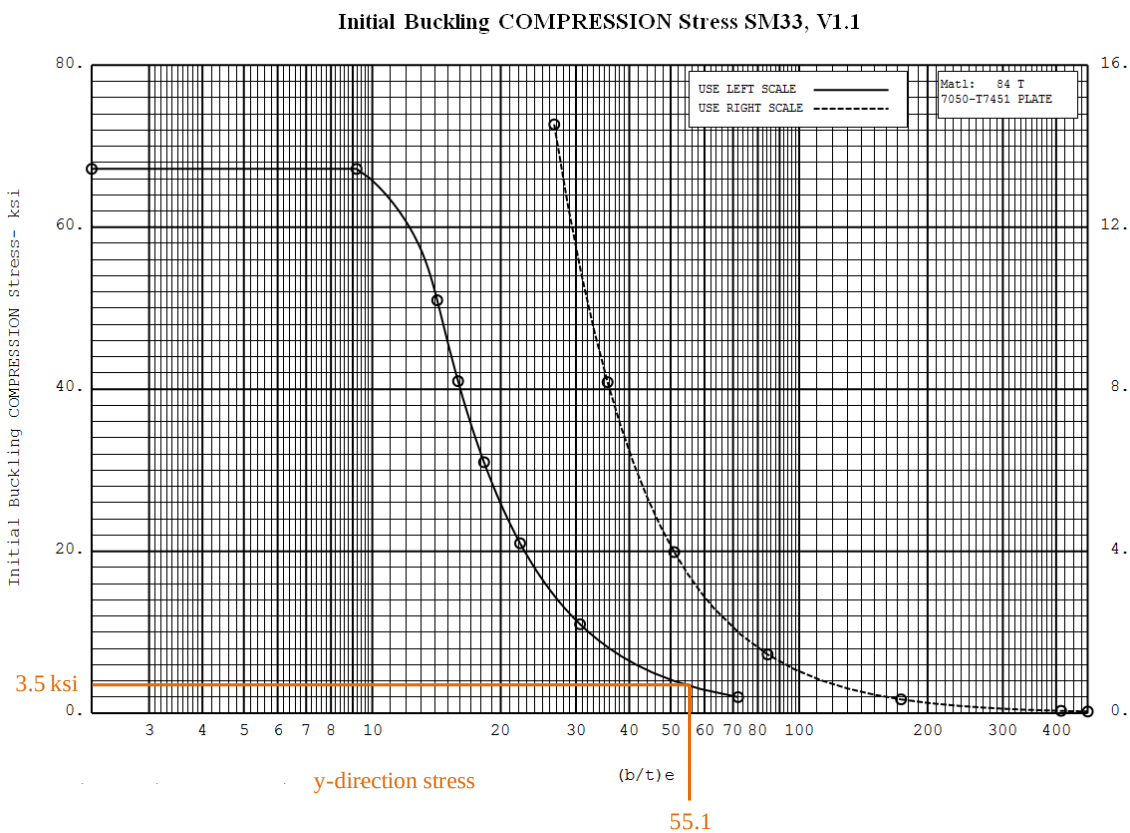

The buckling stress for the y-direction loading is:

$$F_{y,cr} = 3{,}500\ psi$$

Using Table 6.6.5-1, the buckling ratio is:

$$R_y = \frac{f_y}{F_{y,cr}} = \frac{3{,}261\ psi}{3{,}500\ \mathrm{psi}} = 0.93$$

Copyright 2016 Lockheed Martin Corporation.
Note: The current version is always the version on the Lockheed Martin network.

l) Determine the web buckling ratio for the applied beam bending moment[22]:

From Figure 1, the applied bending moment is 24,000 in-lb; using Equation 6.2.2-1, the bending stress at the web-to-flange junction is:

$$f_b = \frac{M(h_c/2)}{I_{SR}}$$

From Step (c), I_{SR}=47.255 in^4 and from Step (e), h_c=11. 5 in, which is the web height between flanges. Note that the shear resistant beam inertia is used for the initial buckling stress.

$$f_b = \frac{24{,}000\ in\text{-}lb(11.5\ in/2)}{47.255\ in^4} = \pm\ 2{,}920\ psi$$

Using Figure 10.3.2-8 with a/b = d_c/h_c = 0.429 and φ=2.0 (pure bending), the web buckling coefficient for the simply supported case is: k_b = 26.9

The effective buckling coefficient, K, using Equation 10.3.1-5 is:

$$K = \frac{k_c\pi^2}{12(1-\nu_e^2)} = \frac{26.9\ \pi^2}{12(1-0.33^2)} = 24.83$$

Using Equation 10.3.1-4, the effective b/t ratio is:

$$\left(\frac{b}{t}\right)_e = \left(\frac{b}{t\sqrt{K}}\right) = \left(\frac{11.5}{0.046\ in\ \sqrt{24.83}}\right) = 50.2$$

The buckling curve generated using IDAT SM33 (v1.1) is shown in Step (j). The buckling stress for the bending load is:

$$F_{b,cr} = 4{,}000\ psi$$

Using Table 6.6.5-1, the buckling ratio is:

$$R_b = \frac{f_b}{F_{b,cr}} = \frac{2{,}920\ psi}{4{,}000\ \text{psi}} = 0.73$$

m) Determine the web buckling ratio for the combined loading:

Using Equation 6.6.5-1, the combined buckling ratio is:

$$R_{bar} = \frac{1}{2}\left[R_x + R_y + \sqrt{(R_x+R_y)^2 + 4(R_s^2+R_b^2)}\right]$$

Step	R_i
(h)	R_s=2.70
(j)	R_x=2.51
(k)	R_y=0.93
(l)	R_b=0.73

$$R_{bar} = \frac{1}{2}\left[2.51 + 0.93 + \sqrt{(2.51+0.93)^2 + 4(2.7^2+0.73^2)}\right] = 5.00$$

Per the problem statement, the beam is part of a fatigue / stiffness critical assembly. The combined buckling ratio is therefore limited to a maximum value of 5.0; using Equation 6.6.3-4, the buckling Ratio-To-Requirement is:

$$RTR_w = \frac{5.0}{R_{bar}} = \frac{5.0}{5.00} = 1.0 \geq 1.0$$

RTR_w is equal to 1.0, so the buckling ratio is acceptable.

[22] The applied bending moment does not include the moment resulting from the 7,200 lb applied shear load.

Copyright 2016 Lockheed Martin Corporation.
Note: The current version is always the version on the Lockheed Martin network.

n) Determine the average stiffener compression stress:

From Example 6.6.4.5, Step (j), the parameter A_u / d t is:

$$\frac{A_u}{d\ t} = \frac{0.1228\ in^2}{5.0\ in(0.046\ in)} = 0.534$$

Using k=0.21 from Step (i), the ratio of stiffener compression stress to web shear stress from Figure 6.6.3-7 is:

$$\frac{f_u}{f_s} = 0.21$$

From Step (g), the web shear stress is: f_s=13,326 psi. The average stiffener compression stress is then:

$$f_u = 0.21(13{,}326\ psi)(-1) = -2{,}798\ psi$$

This is the average compression stress over the length of the stiffener. Due to the double-sided stiffener configuration, it is uniformly distributed over the cross section.

o) Determine the maximum stiffener compression stress:

From Example 6.6.4.5, Step (k), the parameter d / h_u is:

$$\frac{d}{h_u} = \frac{5.0\ in}{11.50\ in} = 0.435$$

Using k=0.21 from Step (i), the ratio of maximum stiffener stress to average stiffener stress from Figure 6.6.3-12 is:

$$\frac{f_{u,max}}{f_u} = 1.39$$

From Step (n), the average stiffener compression stress is: f_u= - 2,798 psi. Using Equation 6.6.3-20, the maximum stiffener compression stress is then:

$$f_{u,max} = \frac{f_{u,max}}{f_u} \times f_u = 1.39(-2{,}798\ psi) = -3{,}889\ psi$$

This is the maximum compression stress in the stiffener, which occurs at the neutral axis of the beam and is uniformly distributed over the cross section. This stress occurs when the web has just buckled.

p) Determine the intermediate diagonal tension angle (α):

From Step (n), the ratio of average stiffener stress to web shear stress is:

$$\frac{f_u}{f_s} = 0.21$$

From Step (i), the diagonal tension factor is:

$$k = 0.21$$

From Figure 6.6.3-8, the tangent of the intermediate diagonal tension angle is:

$$\tan\alpha = 0.938$$

The intermediate diagonal tension angle is:

$$\arctan\alpha = \arctan(0.938) = 43.2°$$

Note that this angle is used in later steps.

Copyright 2016 Lockheed Martin Corporation.
Note: The current version is always the version on the Lockheed Martin network.

q) Determine the peak web shear stress ($f_{s,max}$):

Determine web stress peaking factors C_1 and C_2:
From Step (p), tan α = 0.938.
Using Figure 6.6.3-9, the angle factor C_1=0.002

From Step (d), the Flange Flexibility Factor, ωd = 3.145.
Using Figure 6.6.3-10, the web stress concentration factor C_2=0.52.

From Step (g), the web shear stress is: f_s=13,326 psi
From Step (i), the diagonal tension factor is: k=0.21

Using Equation 6.6.3-10, the peak web shear stress is:

$$f_{s,max} = f_s(1 + k^2 C_1)(1 + kC_2) = 13{,}326\ psi(1 + 0.21^2 \times 0.002)(1 + 0.21 \times 0.52)$$

$$f_{s,max} = 14{,}783\ psi$$

r) Determine the allowable web shear stress ($F_{s,all}$):
From Step (i), the diagonal tension factor is: k=0.21

Using Figure 6.6.3-11(b) with α_{PDT} = 45°, the *basic* allowable web shear stress is:

$$F^*_{all} = 30.0\ ksi$$

The basic allowable shear stress is modified to account for fastener type and web material strength as described in Section 6.6.3.1.3:
Fastener Factor (FF): From Table 6.6.3-6, FF=1.10
Material Factor (MF):
From Table 1b, F_{tu}=67.2 ksi at 160° for 7050-T7451 Plate
Using Equation 6.6.3-12(b), the Material Factor is:

$$MF_{7000} = \frac{F_{tu}}{72.0\ ksi} = \frac{67.2\ ksi}{72.0\ ksi} = 0.93$$

Shear Reduction Factor (RS): From Table 6.6.3-7

$$RS = \frac{Minimum(F_{su-L}, F_{su-LT})}{Maximum(F_{su-L}, F_{su-LT})} \leq 1.0 = \frac{Minimum\ (38.00, 33.60)}{Maximum\ (38.00, 33.60)} = 0.88$$

Using Equation 6.6.3-11, the web allowable shear stress is:

$$F_{all} = FF \times MF \times RS \times F^*_{all} = 1.10 \times 0.93 \times 0.88 \times 30.0\ ksi = 27.01\ ksi$$

s) Determine the web strength margin of safety as described in Section 6.6.5.1.2:

From Figure 1, the applied moment at the center of Bay F is:

$$M = 24{,}000\ in\text{-}lb$$

The shear resistant bending stress at the web-to-flange junction is obtained through use of Equation 6.6.5-2:

$$f_{b,tot,SR} = \frac{M(h_c/2)}{I_{SR}} \times \left(\frac{1}{R_{bar}}\right)$$

From Step (c), I_{SR}=47.255 in^4 and from Step (e), h_c=11. 5 in. From Step (m), R_{bar} = 5.00

$$f_{b,SR} = \frac{24{,}000\ in\text{-}lb\ (11.5\ in/2)}{47.255\ in^4} \times \left(\frac{1}{5.00}\right) = \pm\ 584\ psi$$

Copyright 2016 Lockheed Martin Corporation.
Note: The current version is always the version on the Lockheed Martin network.

From Section 6.6.5.1.2, the web strength is checked at the upper and lower web-to-flange junctions. The remaining stress components used in the check are:

From Step (j), $f_{x,SR}$ = -2,826 psi (1/R_{bar}) = -2,826 psi (1/5.00) = -565 psi

From Step (k), $f_{y,SR}$ = -3,261 psi (1/R_{bar}) = -3,261 psi (1/5.00) = -652 psi

From Step (q), $f_{s,max}$ = 14,783 psi. Note that the shear stress is not factored by 1/R_{bar}.

The x-direction axial and bending stresses are combined as shown below. At the upper and lower web-to-flange junctions (Points A and B from Figure 6.6.5-3), the total stresses are:

$$Point\ A\text{:}\ f_{x,tot,SR} = f_{x,SR} + f_{b,tot,SR} = -565\ psi - 584\ psi = -1{,}149\ psi$$

$$Point\ B\text{:}\ f_{x,tot,SR} = f_{x,SR} + f_{b,tot,SR} = -565\ psi + 584\ psi = 20\ psi$$

The stress components acting at Points A and B are shown below. These are used in web strength analysis.

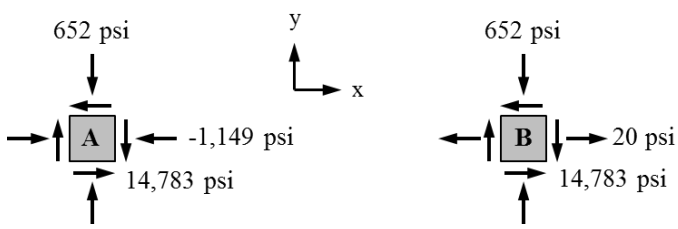

The web strength margins at Points A and B are written using the methods from Section 2.5.4.2.2.1. Note from Table 1b that the L and T direction values of F_{tu} are the same. The stress ratios are calculated below using applicable material properties from Table 1b and $F_{s,all}$ from Step (q).

Point A					
Stress Component (1)	Applied Stress (psi) (2)	Allowable Basis (3)	Allowable Stress (psi) (4)	Stress Ratio, Component (5)	Stress Ratio, R_i (2) / (4)
f_x	-1,149	F_{cu}	64,200	R_{n1}	-0.0179
f_y	-652	F_{cu}	69,200	R_{n2}	-0.0094
f_s	14,783	$F_{s,all}$	27,007	R_s	0.5474

Point B					
Stress Component (1)	Applied Stress (psi) (2)	Allowable Basis (3)	Allowable Stress (psi) (4)	Stress Ratio, Component (5)	Stress Ratio, R_i (2) / (4)
f_x	20	F_{tu}	67,200	R_{n1}	0.000
f_y	-652	F_{cu}	69,200	R_{n2}	-0.0094
f_s	14,783	$F_{s,all}$	27,007	R_s	0.5474

Using Equation 2.5.4-3, the ratio of shear to tensile ultimate strengths is written using properties from Table 1b:

$$K = \frac{F_{su}}{F_{tu}} = \frac{38.00\ ksi}{67.20\ ksi} = 0.565$$

The principal stress ratios at Points A and B are calculated using Equation 2.5.4-4:

$$R_1 = \frac{R_{n1} + R_{n2}}{2} + \sqrt{\left(\frac{R_{n1} - R_{n2}}{2}\right)^2 + K^2 R_s^2}$$

$$R_2 = \frac{R_{n1} + R_{n2}}{2} - \sqrt{\left(\frac{R_{n1} - R_{n2}}{2}\right)^2 + K^2 R_s^2}$$

Copyright 2016 Lockheed Martin Corporation.
Note: The current version is always the version on the Lockheed Martin network.

Point	R_1	R_2
A	0.295	-0.322
B	0.304	-0.313

Figure 2.5.3-9 is used for interaction as shown using R_1, R_2 and K:

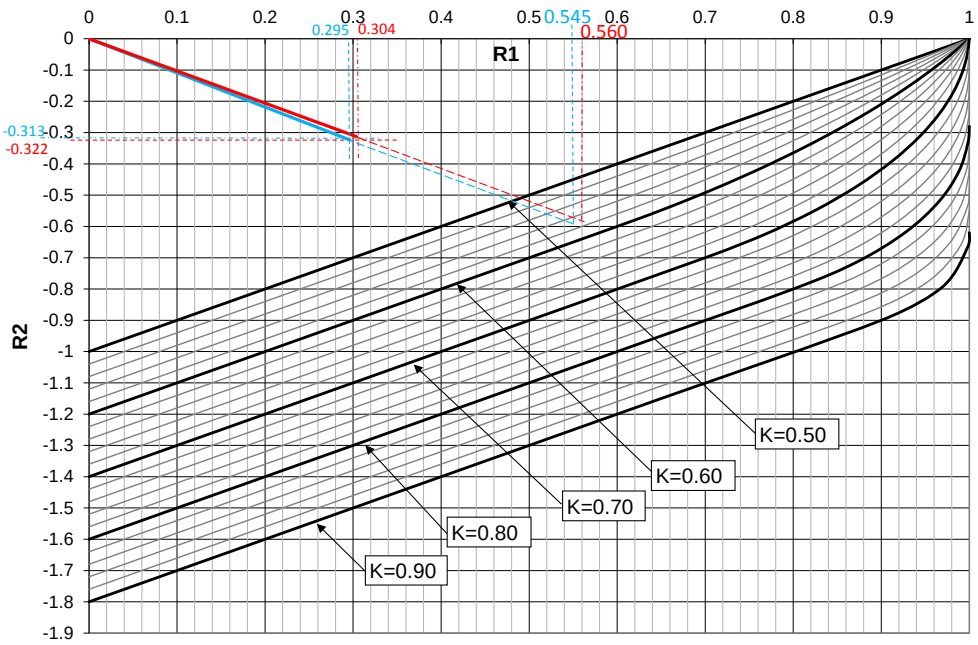

The web strength margins are calculated using the interaction points above.
Due to shear – only (for Reference)

$$MS_{ult} = \frac{1}{0.5474} - 1 = +0.83$$

Combined, At Point A:

$$MS_{ult} = \frac{0.545}{0.295} - 1 = +0.84$$

At Point B:

$$MS_{ult} = \frac{0.560}{0.304} - 1 = +0.84$$

Note that similar margins are obtained using the ordinate (R_2) values.

Also note that, in this example, the applied bending moment contributes little to the margin of safety. This will not always be the case and should be checked.

Copyright 2016 Lockheed Martin Corporation.
Note: The current version is always the version on the Lockheed Martin network.

t) Determine the stiffener compression load due to beam curvature

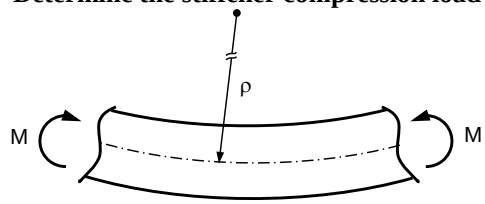

The radius of curvature in bending is approximated through use of Equation 6.2.5-18 (beam deflection equation):

$$\frac{1}{\rho} = \frac{M}{EI}$$

From Figure 1, the maximum bending moment for Bay F is: M=240,000 in-lb
From Table 1b, the beam modulus is: E=10.05 msi
From Step (c), the beam moment of inertia is: I_{PB} = 41.425 in^4

The beam radius of curvature is:

$$\rho = \frac{EI}{M} = \frac{10.05E6\ psi\ (41.425\ in^4)}{240{,}000\ in\text{-}lb} = 1{,}735\ in$$

The average web running load, at the neutral axis is:

$$w = \frac{P_{cap}}{\rho}, \text{ (Equation 6.2.5-15,-16), where } P_{cap} = \frac{M}{h_e}$$

$$h_e = 10.873\ in, \text{ from the Step (c) illustration}$$

$$w = \frac{M}{h_e\ \rho} = \frac{240{,}000\ in\text{-}lb}{11.75\ in\ (1{,}735\ in)} = -12\ \frac{lb}{in}$$

The total load for Bay F (5 in width) is:

$$W = -12\ \frac{lb}{in}(5.0\ in) = -60\ lb$$

In diagonal tension beams, the crushing loads due to curvature are assumed to be carried by the stiffeners only. This load is shared between the stiffener and the effective width of unbuckled web. For simplicity it is assumed to act on the stiffener alone.

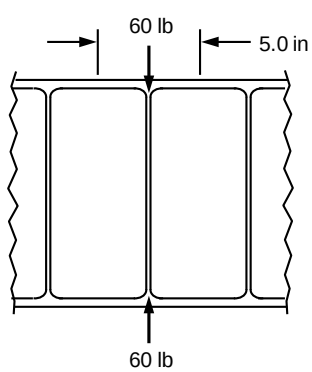

From Step (b), the stiffener area is: A_u = 0.1228 in^2

Copyright 2016 Lockheed Martin Corporation.
Note: The current version is always the version on the Lockheed Martin network.

The stiffener compression stress due to curvature is:

$$f_{u,r} = \frac{W}{A_u} = \frac{-60\ lb}{0.1228\ in^2} = -489\ psi$$

The 489 psi compression stress is a small contributor to the stiffener total in this case, but is included in the analysis for illustration.

u) Determine the stiffener compression stress due to beam y-direction web axial load redistribution:

Using Equation 6.6.5-3, the web compression load redistributed to the stiffener is:

$$P_{u,PB} = f_y\ d\ t\left(1 - \frac{1}{R_{bar}}\right)$$

From Step (k), f_y = -3,261 psi
From the Step (e) illustration, d = 5.0 in, t = 0.046 in
From Step (m), R_{bar} = 5.00

$$P_{u,PB} = -3{,}261\ psi \times 5.0\ in \times 0.046\ in\left(1 - \frac{1}{5.00}\right) = -600\ lb$$

From Step (b), the stiffener area is: A_u = 0.1228 in^2

Using Equation 6.6.5-4, the stiffener compression stress due to y-direction redistribution load is:

$$f_{u,PB} = \frac{P_{u,PB}}{A_u} = \frac{-600\ lb}{0.1228\ in^2} = -4{,}886\ psi$$

v) Determine the stiffener margins of safety for compression yield and column buckling:

The total stiffener compression stress is the average compression stress in the stiffener (f_u) plus the compression stress due to curvature ($f_{u,r}$) and web load redistribution ($f_{u,PB}$).

$$f_{u,tot} = f_u + f_{u,r} + f_{u,PB}$$

Step	Component	Stress (psi)
(n)	f_u	-2,798
(t)	$f_{u,r}$	-489
(u)	$f_{u,PB}$	-4,886
		Σ = -8,173

The average total stiffener compression stress is: $f_{u,tot}$ = -8,173 psi

Reference Sections 6.6.3.2.1 and 6.6.3.2.2, the yield and column checks required for a double-sided stiffener are:

1. $f_{u,tot}$ must remain below the stiffener compressive yield stress, F_{cy}
2. $f_{u,tot}$ must remain below the column buckling stress, calculated using the effective length from Equation 6.6.3-17 or 6.6.3-18

<u>Compression Yield Check</u>:
From Table 1b, the stiffener compression yield stress is: F_{cy}=64.9 psi
By inspection, stiffener compression yield is not critical.

<u>Column Check</u>:
The effective column length for a double-sided stiffener is calculated using Equation 6.6.3-17(a).
From the Step (e) illustration, d=5.0 in, h= 12.00 in; d/h = 5.0 in / 12.00 in = 0.42, which is less than 1.5.

Copyright 2016 Lockheed Martin Corporation.
Note: The current version is always the version on the Lockheed Martin network.

The effective column length is calculated using Equation 6.6.3-17(a):

$$L_e = \frac{h_u}{\sqrt{1 + k^2\left(3 - 2\frac{d}{h}\right)}}$$

From the Step (e) illustration, the stiffener height is: h_u = 11.50 in
From Step (i), the diagonal tension factor is: k=0.21

$$L_e = \frac{11.50\ in}{\sqrt{1 + (0.21)^2\left(3 - 2 \times \frac{5.0\ in}{12.00\ in}\right)}} = 10.99\ in$$

From Step (b), the radius of gyration is: ρ_u=0.5260 in; the stiffener slenderness ratio is:

$$\frac{L_e}{\rho_u} = \frac{10.99\ in}{0.5260\ in} = 20.89$$

The column curve is generated using IDAT SM83 (v1.0), whose output is as follows.

Open Section Column Analysis V1.0

```
Material(s):
1)  85 T
   7050-T7451 PLATE | 2.0-3.0. | B BASIS | 160 F | 0.5 hr | No Spec
   FTU=  66.3 ksi   FCY=  65.8 ksi   EC=10342.   RONC= 22.0   FCMAX=  66.3 ksi
```

Copyright 2016 Lockheed Martin Corporation.
Note: The current version is always the version on the Lockheed Martin network.

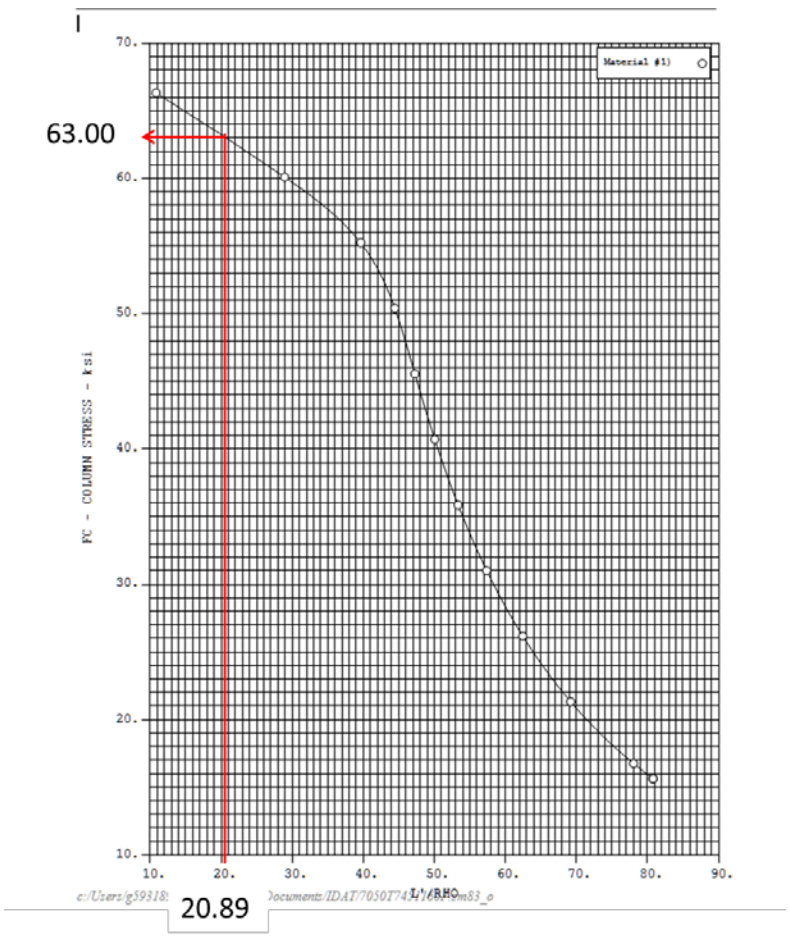

From the column curve above, the allowable stress is 63.0 ksi at 160° F. The column buckling stress is:

$$F_{col} = 63.0\ ksi$$

The margin of safety for column buckling is calculated using Equation 6.6.3-19:

$$MS_{ult} = \frac{F_{col}}{f_{u,tot}} = \frac{63{,}000\ psi}{8{,}173\ psi} - 1 = +6.71$$

w) Determine the stiffener margin of safety for crippling:

Per Section 6.6.4.2.1, a crippling analysis for the stiffener is required using the methods from Section 8.4. The maximum total stiffener compression stress is the maximum compression stress in the stiffener, $f_{u,max}$, plus the compression stress due to curvature ($f_{u,r}$) and web load redistribution ($f_{u,PB}$).

$$f_{u,\max(tot)} = f_{u,max} + f_{u,r} + f_{u,PB}$$

Step	Component	Stress (psi)
(o)	$f_{u,max}$	-3,889
(t)	$f_{u,r}$	-489
(u)	$f_{u,PB}$	-4,886

Σ = -9,264

Copyright 2016 Lockheed Martin Corporation.
Note: The current version is always the version on the Lockheed Martin network.

The maximum total stiffener compression stress is: $f_{u,tot}$ = -9,264 psi
This stress acts on the effective crippling section established in Example 6.6.4.5, Step (r):

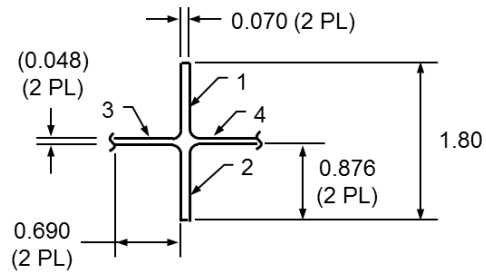

The total area of the effective crippling section is:

$$A_{u,cc} = B_u t_u + 2\, b_{eff} t = 1.80\ in(0.070\ in) + 2 \times 0.690\ in \times 0.046\ in = 0.1895\ in^2$$

The total load acting on the effective section is:

$$P_{u,\max(tot)} = f_{u,\max(tot)} A_{u,cc} = -9{,}264\ psi \times 0.1895\ in^2 = -1{,}756\ lb$$

From Example 6.6.4.5, Step (r), the crippling stress for the section is calculated using Equation 8.4.0-1:

$$F_{cc} = \frac{\Sigma(b\ t\ F_{cc})}{\Sigma(b\ t)} = 39{,}344 \text{ psi}$$

The crippling load for the section is calculated using Equation 8.4.0-2:

$$P_{cc} = F_{cc} A_{u,cc} = 39{,}344 \text{ psi}(0.1895\ in^2) = 7{,}456\ lb$$

The crippling margin of safety is calculated using Equation 8.4.0-3:

$$MS_{ult} = \frac{P_{cc}}{P_{u,\max(tot)}} = \frac{7{,}456\ lb}{1{,}756\ lb} - 1 = +3.24$$

x) Determine the required minimum moment of inertia for the stiffeners:

The required moment of inertia calculation is unchanged from Example 6.6.4.5, Step (s).

y) Determine the primary bending stresses in the flanges due to the applied shear load:

Stresses are calculated at Sections A-A and E-E in Bay F:

Copyright 2016 Lockheed Martin Corporation.
Note: The current version is always the version on the Lockheed Martin network.

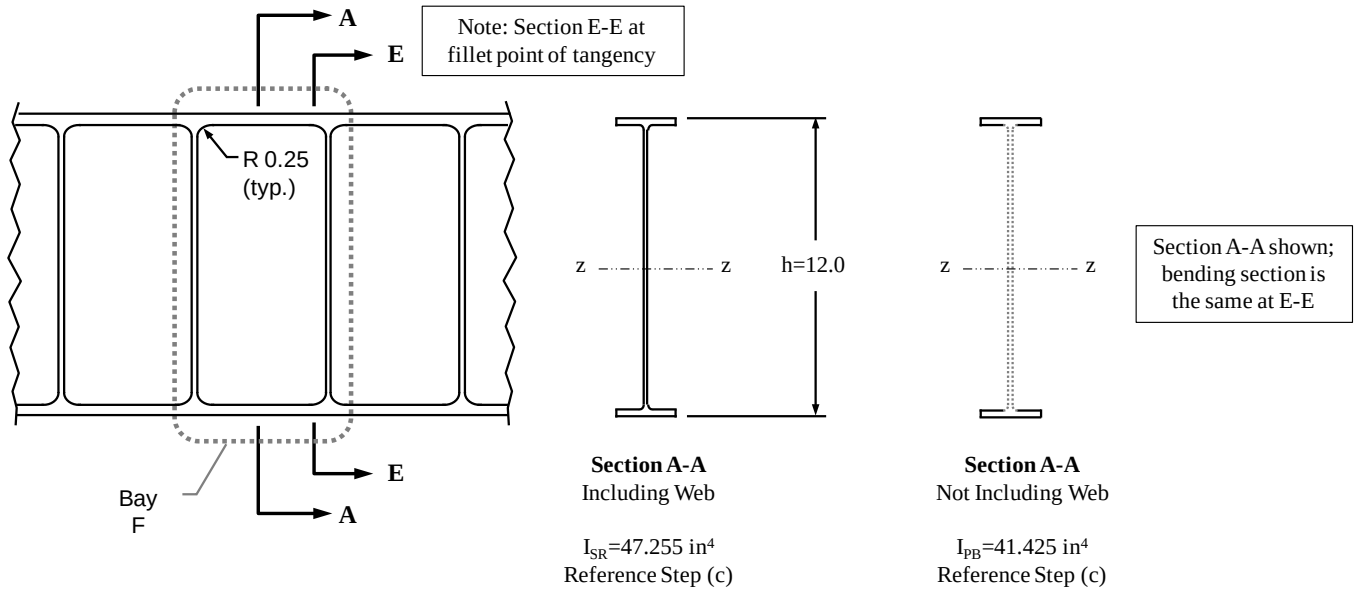

From the problem statement, the externally applied shear load is: V=7,200 lb.
The maximum bending moments acting at Sections A-A and E-E are:
Section A-A, x=27.5 in:

$$M_{A-A} = V(x) = 7{,}200\ lb(27.5\ in) = 198{,}000\ in\text{-}lb$$

Section E-E, x=30.0 in – 0.070 in / 2 – 0.25 in = 29.715 in

$$M_{E-E} = V(x) = 7{,}200\ lb(29.715\ in) = 213{,}948\ in\text{-}lb$$

The flange bending stresses are calculated at the flange OML and IML:

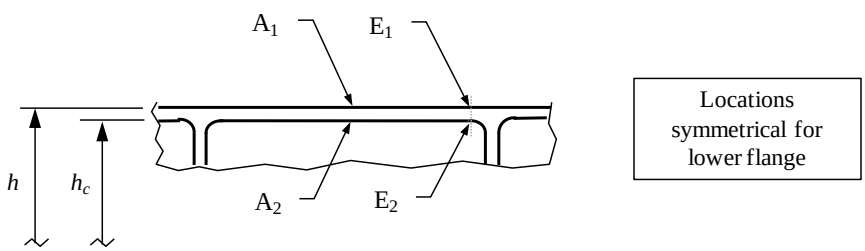

<u>Flange primary bending stresses as a shear resistant beam:</u>
The bending moment at the point of web buckling is the portion carried as a shear resistant beam, calculated using Equation 6.6.3-37(a):

$$M_{SR} = M(1-k)$$

From Step (i), the Diagonal Tension Factor is: k = 0.21:

$$M_{SR}^{A-A} = 198{,}000\ in\text{-}lb(1-0.21) = 156{,}420\ in\text{-}lb$$

$$M_{SR}^{E-E} = 213{,}948\ in\text{-}lb(1-0.21) = 169{,}019\ in\text{-}lb$$

The shear resistant bending stresses at the flange OML and IML are calculated using Equation 6.6.3-38(a):

$$Flange\ OML\text{:}\ f_{b,SR} = \frac{M_{SR}(h/2)}{I_{SR}};\quad Flange\ IML\text{:}\ f_{b,SR} = \frac{M_{SR}(h_c/2)}{I_{SR}}$$

From the Step (e) illustration, the flange OML and IML heights are: h=12.0 in, h_c=11.5 in
From the Step (c), the beam moment of inertia including the web is: I_{SR} = 47.255 in^4
The shear resistant bending stresses at the upper and lower flange OML are:

Copyright 2016 Lockheed Martin Corporation.
Note: The current version is always the version on the Lockheed Martin network.

$$Point\ A_1: f_{b,SR}^{A-A} = \frac{156{,}420\ in\text{-}lb(12.0\ in/2)}{47.255\ in^4} = \pm 19{,}861\ psi$$

$$Point\ A_2: f_{b,SR}^{A-A} = \frac{156{,}420\ in\text{-}lb(11.50\ in/2)}{47.255\ in^4} = \pm 19{,}033\ psi$$

$$Point\ E_1: f_{b,SR}^{E-E} = \frac{169{,}019\ in\text{-}lb(12.0\ in/2)}{47.255\ in^4} = \pm 21{,}460\ psi$$

$$Point\ E_2: f_{b,SR}^{E-E} = \frac{169{,}019\ in\text{-}lb(11.5\ in/2)}{47.255\ in^4} = \pm 20{,}566\ psi$$

<u>Flange primary bending stresses as a post-buckled beam:</u>

The bending moment beyond the point of web buckling is the portion carried as a post-buckled beam, calculated using Equation 6.6.3-37(b):

$$M_{PB} = M(k)$$

From Step (i), the Diagonal Tension Factor is: k = 0.21:

$$M_{PB}^{A-A} = 198{,}000\ in\text{-}lb(0.21) = 41{,}580\ in\text{-}lb$$

$$M_{PB}^{E-E} = 213{,}948\ in\text{-}lb(0.21) = 44{,}929\ in\text{-}lb$$

The post-buckled bending stresses at the flange OML and IML are calculated using Equation 6.6.3-38(b):

$$Flange\ OML: f_{b,PB} = \frac{M_{PB}(h/2)}{I_{PB}}; \quad Flange\ \mathrm{I}ML: f_{b,PB} = \frac{M_{PB}(h_c/2)}{I_{PB}}$$

From the Step (e) illustration, the flange OML and IML heights are: h=12.0 in, h_c=11.5 in

From the Step (c), the beam moment of inertia not including the web is: I_{PB} = 41.425 in^4

The post-buckled bending stresses at the upper and lower flange OML are:

$$Point\ A_1: f_{b,PB}^{A-A} = \frac{41{,}580\ in\text{-}lb(12.0\ in/2)}{41.425\ in^4} = \pm 6{,}022\ psi$$

$$Point\ A_2: f_{b,PB}^{A-A} = \frac{41{,}580\ in\text{-}lb(11.50\ in/2)}{41.425\ in^4} = \pm 5{,}772\ psi$$

$$Point\ E_1: f_{b,PB}^{E-E} = \frac{44{,}929\ in\text{-}lb(12.0\ in/2)}{41.425\ in^4} = \pm 6{,}508\ psi$$

$$Point\ E_2: f_{b,PB}^{E-E} = \frac{44{,}929\ in\text{-}lb(11.50\ in/2)}{41.425\ in^4} = \pm 6{,}236\ psi$$

<u>Total flange primary bending stresses:</u>

The primary flange bending stresses are the sum of the shear resistant and post-buckled flange bending stresses. The primary bending stresses are calculated using Equation 6.6.3-39:

$$f_{b,pr} = f_{b,SR} + f_{b,PB}$$

At the upper flange OML:

$$Point\ A_1: f_{b,pr}^{A-A} = -19{,}861\ psi - 6{,}022\ psi = -25{,}883\ psi$$

At the upper flange IML:

$$Point\ A_2: f_{b,pr}^{E-E} = -19{,}033\ psi - 5{,}772\ psi = -24{,}805\ psi$$

At the upper flange OML:

$$Point\ E_1: f_{b,pr}^{A-A} = -21{,}460\ psi - 6{,}508\ psi = -27{,}968\ psi$$

Copyright 2016 Lockheed Martin Corporation.
Note: The current version is always the version on the Lockheed Martin network.

At the upper flange IML:

$Point\ E_2$: $f_{b,pr}^{E-E} = -20{,}566\ psi - 6{,}236\ psi = -26{,}802\ psi$

At the lower flange OML:

$Point\ A_1$: $f_{b,pr}^{A-A} = 19{,}861\ psi + 6{,}022\ psi = 25{,}883\ psi$

At the lower flange IML:

$Point\ A_2$: $f_{b,pr}^{E-E} = 19{,}033\ psi + 5{,}772\ psi = 24{,}805\ psi$

At the lower flange OML:

$Point\ E_1$: $f_{b,pr}^{A-A} = 21{,}460\ psi + 6{,}508\ psi = 27{,}968\ psi$

At the lower flange IML:

$Point\ E_2$: $f_{b,pr}^{E-E} = 20{,}566\ psi + 6236\ psi = 26{,}802\ psi$

The primary bending stresses are shown below for reference:

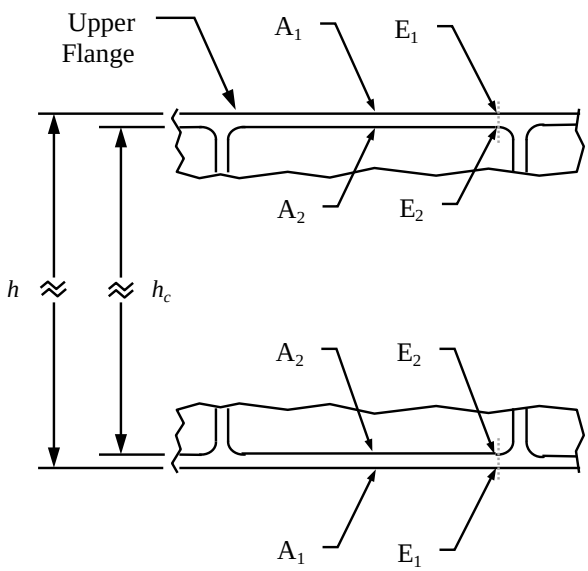

Upper Flange	
Point	$f_{b,pr}$ (psi)
A_1	-25,883
A_2	-24,805
E_1	-27,968
E_2	-26,802

Lower Flange	
Point	$f_{b,pr}$ (psi)
A_1	25,883
A_2	24,805
E_1	27,968
E_2	26,802

z) Determine the secondary bending stresses in the flanges due to the applied shear load:

Using Equation 6.6.3-40(a), the secondary bending moment acting on the flange at the center of the bay (Section A-A) is:

$$M_{sec}^{A-A} = -\frac{1}{24}\ k\ f_s\ t\ d^2 C_3$$

Using Equation 6.6.4-2, the secondary bending moment acting on the flange at the fillet tangency (Section E-E) is:

$$M_{sec}^{E-E} = \frac{1}{12}\ k\ f_s\ t\ C_3(6x_1^2 + d^2 - 6x_1 d)$$

Copyright 2016 Lockheed Martin Corporation.
Note: The current version is always the version on the Lockheed Martin network.

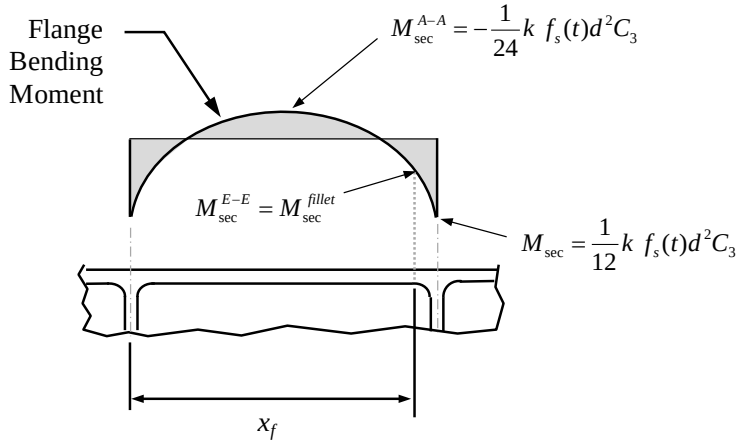

x_f = d – t_u /2 – R_{fillet} , where: t_u = 0.070 in and R_{fillet} = 0.25 in (from Figure 1)
x_f = 5.0 in – 0.070 in / 2 – 0.25 in = 4.72 in
From Step (i), the Diagonal Tension Factor is: k = 0.21
From Step (g), the web shear stress is: f_s = 13,326 psi
From Figure 1, the web thickness is: t=0.048 in (nominal is used)
From Figure 1, the bay width is: d=5.0 in
From Step (d), the Flange Flexibility Factor is: ωd=3.145. Using Figure 6.6.3-10, the stress concentration factor C_3=0.84.

$$M_{sec}^{A-A} = -\frac{1}{24}\ (0.21)(13{,}326\ psi)(0.048\ in)(5.0\ in)^2(0.84) = -118\ in\text{-}lb$$

$$M_{sec}^{E-E} = \frac{1}{12}\ (0.21)(13{,}326\ psi)(0.048\ in)(0.84)[6(4.72\ in)^2 + (5.0\ in)^2 - 6(4.72\ in)(5.0\ in)] = 161\ in\text{-}lb$$

The flange secondary bending stress is calculated using Equation 6.6.3-41:

$$f_{b,sec} = \frac{M_{sec}(y'_{bar})}{I_{cap}}$$

From Step (b), y'_{bar}=0.125 in, I_{cap}=0.003125 in^4

$$f_{b,sec}^{A-A} = \frac{-118\ in\text{-}lb(0.125\ in)}{0.003125\ in^4} = \pm 4{,}720\ psi$$

$$f_{b,sec}^{E-E} = \frac{161\ in\text{-}lb(0.125\ in)}{0.003125\ in^4} = \pm 6{,}440\ psi$$

The flange secondary bending stresses acting on the upper flange are shown. Note that the stresses act symmetrically on the lower flange.

Copyright 2016 Lockheed Martin Corporation.
Note: The current version is always the version on the Lockheed Martin network.

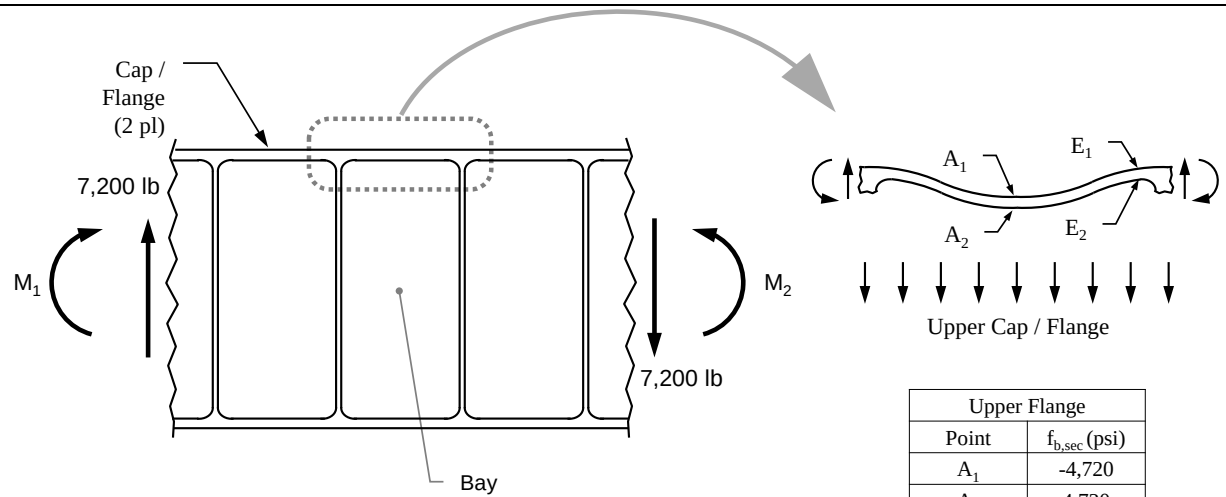

Upper Flange	
Point	$f_{b,sec}$ (psi)
A_1	-4,720
A_2	4,720
E_1	6,440
E_2	-6,440

aa) Determine the secondary axial stresses in the flanges due to the applied shear load:

Using Equation 6.6.3-42, the secondary compression load in the upper and lower flanges due to tension field action is:

$$P_{sec} = -\frac{kV}{2\tan\alpha}$$

From Step (i), the Diagonal Tension Factor is: k = 0.21

From the problem statement, the externally applied shear load is: V=7,200 lb

From Step (p), the Diagonal Tension Angle is: $\alpha = 43.2°$

The secondary compression load in the upper and lower flanges at Sections A-A and E-E is:

$$P_{sec}^{A-A} = P_{sec}^{E-E} = -\frac{0.21(7{,}200\ lb)}{2\tan(43.2°)} = -805\ lb$$

Using Equation 6.6.3-43, the secondary compression stress in the upper and lower flanges is:

$$f_{a,sec} = \frac{P_{sec}}{A_{cap}}$$

From Step (b), the upper and lower flange areas are is: $A_{cap} = 0.600\ in^2$

The secondary compression stress in the upper and lower flanges at Sections A-A and E-E is:

$$f_{a,sec}^{A-A} = f_{a,sec}^{E-E} = \frac{-805\ lb}{0.600\ in^2} = -1{,}342\ psi$$

The secondary compressive stress in the flanges is as shown:

Copyright 2016 Lockheed Martin Corporation.
Note: The current version is always the version on the Lockheed Martin network.

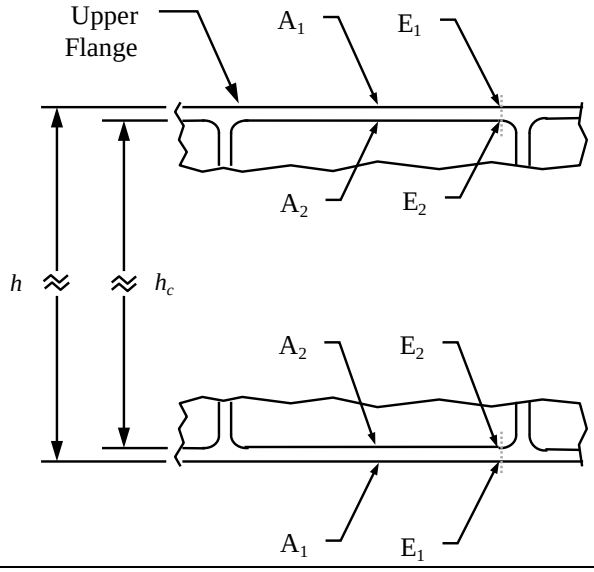

Upper Flange	
Point	$f_{a,sec}$ (psi)
A_1	-1,342
A_2	-1,342
E_1	-1,342
E_2	-1,342

Lower Flange	
Point	$f_{a,sec}$ (psi)
A_1	-1,342
A_2	-1,342
E_1	-1,342
E_2	-1,342

bb) Determine the flange compression stress due to x-direction load redistribution:

Using Equation 6.6.5-5, the web compression load redistributed to each flange is:

$$P_{f,PB} = 0.5\, f_x\, h\, t \left(1 - \frac{1}{R_{bar}}\right)$$

From Step (j), the web compression stress is: f_x = -2,826 psi
From the Step (e) illustration, h=12 in and t = 0.048 in
From Step (m), the combined buckling ratio is: R_{bar} = 5.00

$$P_{f,PB} = 0.5(-2{,}826\ psi)(\ 12.00\ in)(0.048\ in)\left(1 - \frac{1}{5.00}\right) = -651\ lb$$

Using Equation 6.6.5-6, the flange compression stress is:

$$f_{f,PB} = \frac{P_{f,PB}}{A_{cap}}$$

From Step (b), the upper and lower flange areas are is: A_{cap} = 0.600 in^2
The compression stress in the upper and lower flanges at Sections A-A and E-E is:

$$f_{f,PB}^{A-A} = f_{f,PB}^{E-E} = \frac{-651\ lb}{0.600\ in^2} = -1{,}085\ psi$$

The compression stress due to load redistribution in the flanges is as shown:

Copyright 2016 Lockheed Martin Corporation.
Note: The current version is always the version on the Lockheed Martin network.

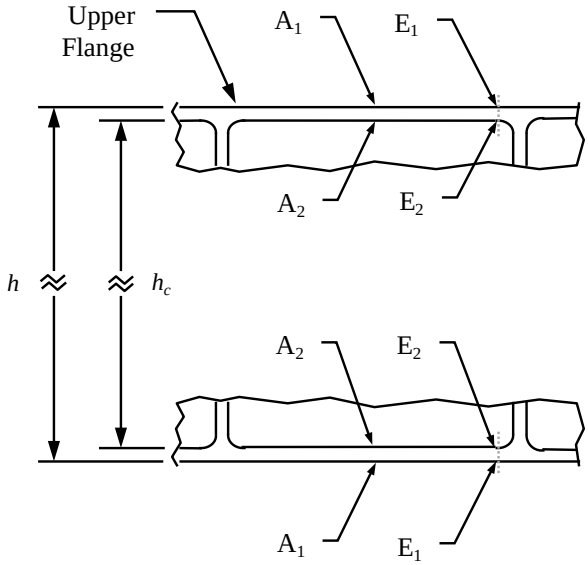

Upper Flange	
Point	$f_{f,PB}$ (psi)
A_1	-1,085
A_2	-1,085
E_1	-1,085
E_2	-1,085

Lower Flange	
Point	$f_{f,PB}$ (psi)
A_1	-1,085
A_2	-1,085
E_1	-1,085
E_2	-1,085

cc) Determine the flange stresses due to the externally applied bending moment:

Using Equation 6.6.5-7(a), the shear resistant portion of the applied moment is:

$$M_{e,SR} = M_e\left(\frac{1}{R_{bar}}\right)$$

From Figure 1, the externally applied bending moment is: M_e = 24,000 in-lb. This moment exists at Sections A-A and E-E.
From Step (m), the combined buckling ratio is: R_{bar} = 5.00

$$M_{e,SR}^{A-A} = M_{e,SR}^{E-E} = 24{,}000\ in\text{-}lb\left(\frac{1}{5.00}\right) = 4{,}800\ in\text{-}lb$$

The shear resistant bending stresses at the flange OML and IML are calculated using Equation 6.6.5-8(a):

$$Flange\ OML\text{:}\ f_{be,SR} = \frac{M_{e,SR}(h/2)}{I_{SR}};\quad Flange\ \mathrm{IML}\text{:}\ f_{be,SR} = \frac{M_{e,SR}(h_c/2)}{I_{SR}}$$

From Step (d), h = 12.0 in at the flange OML; h_c = 11.5 in at the flange IML
From Step (c), I_{SR} = 47.255 in^4

$$Points\ A_1, E_1\text{:}\ f_{be,SR}^{A-A} = f_{be,SR}^{E-E} = \frac{4{,}800\ in\text{-}lb(12.0\ in/2)}{47.255\ in^4} = \pm 609\ psi$$

$$Points\ A_2, E_2\text{:}\ f_{be,SR}^{A-A} = f_{be,SR}^{E-E} = \frac{4{,}800\ in\text{-}lb(11.5\ in/2)}{47.255\ in^4} = \pm 584\ psi$$

Using Equation 6.6.5-7(b), the post-buckled portion of the applied moment is:

$$M_{e,PB} = M_e\left(1 - \frac{1}{R_{bar}}\right)$$

Where M_e = 24,000 in-lb and R_{bar} = 5.00, as above.

$$M_{e,SR}^{A-A} = M_{e,SR}^{E-E} = 24{,}000\ in\text{-}lb\left(1 - \frac{1}{5.00}\right) = 19{,}200\ in\text{-}lb$$

The post-buckled bending stresses at the flange OML and IML are calculated using Equation 6.6.5-8(b):

$$Flange\ OML\text{:}\ f_{be,PB} = \frac{M_{e,PB}(h/2)}{I_{PB}};\quad Flange\ \mathrm{IML}\text{:}\ f_{be,PB} = \frac{M_{e,PB}(h_c/2)}{I_{PB}}$$

From Step (d), h = 12.0 in at the flange OML; h_c = 11.5 in at the flange IML

Copyright 2016 Lockheed Martin Corporation.
Note: The current version is always the version on the Lockheed Martin network.

From Step (c), I_{PB} = 41.425 in^4

$$Points\ A_1, E_1: f_{be,PB}^{A-A} = f_{be,PB}^{E-E} = \frac{19{,}200\ in\text{-}lb(12.0\ in/2)}{41.425\ in^4} = \pm 2{,}781\ psi$$

$$Points\ A_2, E_2: f_{be,PB}^{A-A} = f_{be,PB}^{E-E} = \frac{19{,}200\ in\text{-}lb(11.5\ in/2)}{41.425\ in^4} = \pm 2{,}665\ psi$$

<u>Total flange bending stresses due to 24,000 in-lb applied moment:</u>

The flange bending stresses are the sum of the shear resistant and post-buckled stresses. The flange bending stresses are calculated using Equation 6.6.3-39:

$$f_{be} = f_{be,SR} + f_{be,PB}$$

At the upper flange OML:

$$Points\ A_1, E_1: f_{be} = -609\ psi - 2{,}781\ psi = -3{,}390\ psi$$

At the upper flange IML:

$$Points\ A_2, E_2: f_{be} = -584\ psi - 2{,}665\ psi = -3{,}249\ psi$$

At the lower flange OML:

$$Points\ A_1, E_1: f_{be} = 609\ psi + 2{,}781\ psi = 3390\ psi$$

At the lower flange IML:

$$Points\ A_2, E_2: f_{be} = 584\ psi + 2{,}665\ psi = 3{,}249\ psi$$

The primary bending stresses are shown below:

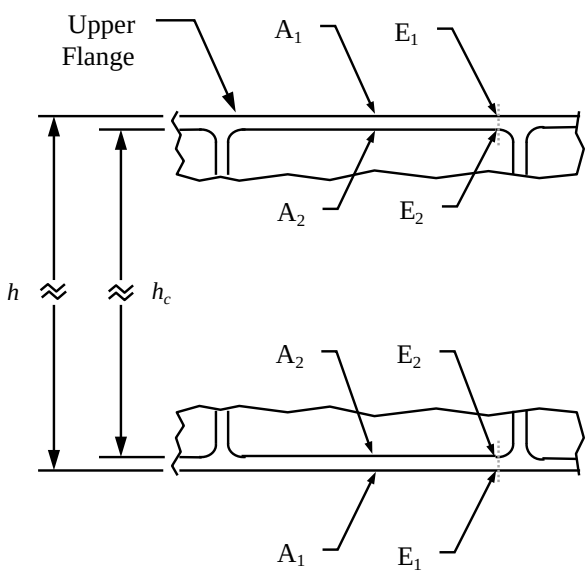

Upper Flange	
Point	f_{be} (psi)
A_1	-3,390
A_2	-3,249
E_1	-3,390
E_2	-3,249

Lower Flange	
Point	f_{be} (psi)
A_1	3,390
A_2	3,249
E_1	3,390
E_2	3,249

Copyright 2016 Lockheed Martin Corporation.
Note: The current version is always the version on the Lockheed Martin network.

dd) Determine the flange bending stresses due to the y-direction post-buckled load:

Using Equation 6.6.3-39, the beam y-direction post-buckled compression stress is:

$$f_{y,PB} = f_y\left(1 - \frac{1}{R_{bar}}\right)$$

From Step (k), the web y-direction stress is: f_y = 3,261 psi (web compression is positive sign for the bending calculation)

From Step (m), R_{bar} = 5.00

$$f_{y,PB} = 3{,}261\ psi\left(1 - \frac{1}{5.00}\right) = 2{,}609\ psi$$

From Equation 6.6.5-10(a), the bending moment acting on the flange at the center of the bay (Section A-A) is:

$$M_{y,PB}^{A-A} = -\frac{1}{24}\ f_{y,PB}\ t\ d^2$$

From Equation 6.6.5-10(c), the bending moment acting on the flange at the fillet tangency (Section E-E) is:

$$M_{y,PB}^{E-E} = \frac{1}{12}\ f_{y,PB}\ t\ (6x_f^2 + d^2 - 6x_f d)$$

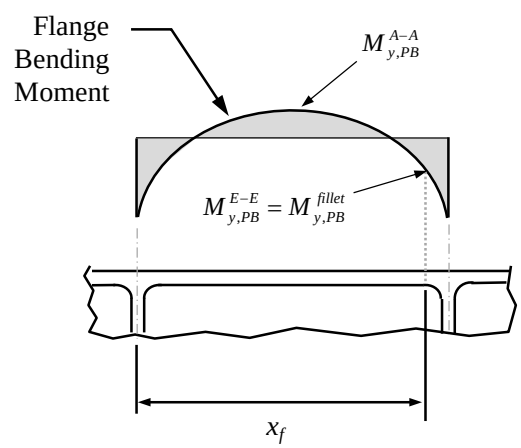

x_f = d – t_u /2 – R_{fillet} , where: t_u = 0.070 in and R_{fillet} = 0.25 in (from Figure 1)

x_f = 5.0 in – 0.070 in / 2 – 0.25 in = 4.72 in

From Figure 1, the web thickness is: t=0.048 in (nominal is used)

From Figure 1, the bay width is: d=5.0 in

$$M_{y,PB}^{A-A} = -\frac{1}{24}(2{,}609\ psi)(0.048\ in)(5.0\ in)^2 = -130\ in\text{-}lb$$

$$M_{y,PB}^{E-E} = \frac{1}{12}(2{,}609\ psi)(0.048\ in)[6(4.72\ in)^2 + (5.0\ in)^2 - 6(4.72\ in)(5.0\ in)] = 178\ in\text{-}lb$$

The flange bending stress is calculated using Equation 6.6.5-11(a):

$$f_{b_{y,PB}} = \frac{M_{y,PB}(y'_{bar})}{I_{cap}}$$

From Step (b), y'_{bar}=0.125 in, I_{cap}=0.003125 in^4

$$f_{b_{y,PB}}^{A-A} = \frac{-130\ in - lb(0.125\ in)}{0.003125\ in^4} = \pm 5{,}200\ psi$$

$$f_{b_{y,PB}}^{E-E} = \frac{178\ in - lb(0.125\ in)}{0.003125\ in^4} = \pm 7{,}120\ psi$$

Copyright 2016 Lockheed Martin Corporation.
Note: The current version is always the version on the Lockheed Martin network.

The flange bending stresses acting on the upper flange are shown below. Note that the stresses act symmetrically on the lower flange.

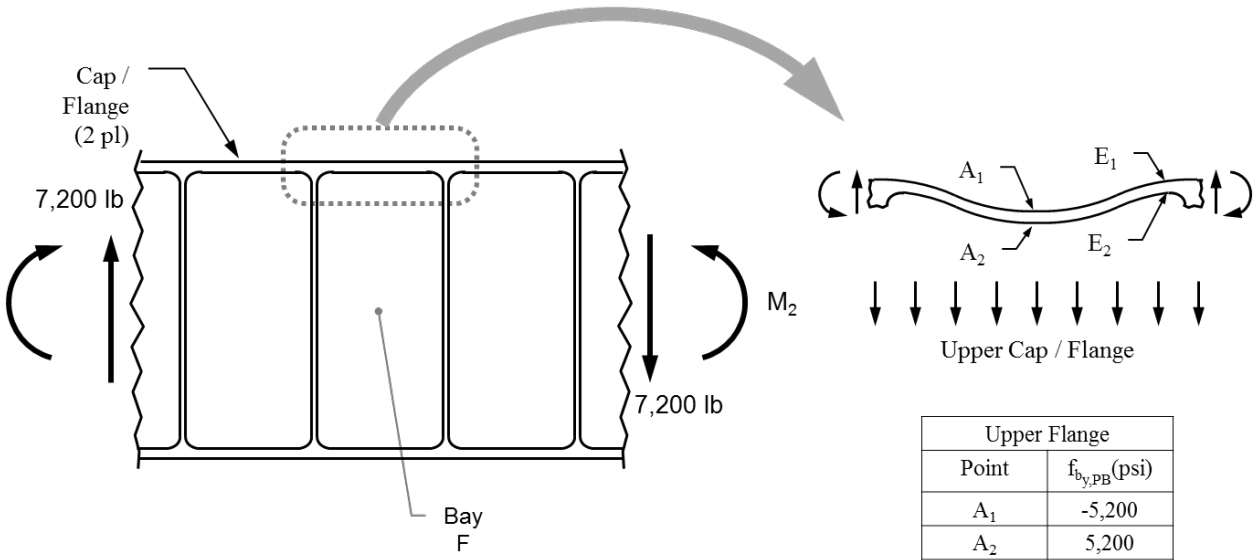

Upper Flange	
Point	$f_{b_{y,PB}}$(psi)
A_1	-5,200
A_2	5,200
E_1	7,120
E_2	-7,120

ee) Determine the total stresses acting on the flanges:

The total flange stresses are the sum of the primary and secondary flange stresses from Steps (y), (z) and (aa-dd). The total flange stress is calculated using Equation 6.6.5-12:

$$f_{b,tot} = f_{b,pr} + f_{b,sec} + f_{a,sec} + f_{f,PB} + f_{be} + f_{b_{y,PB}}$$

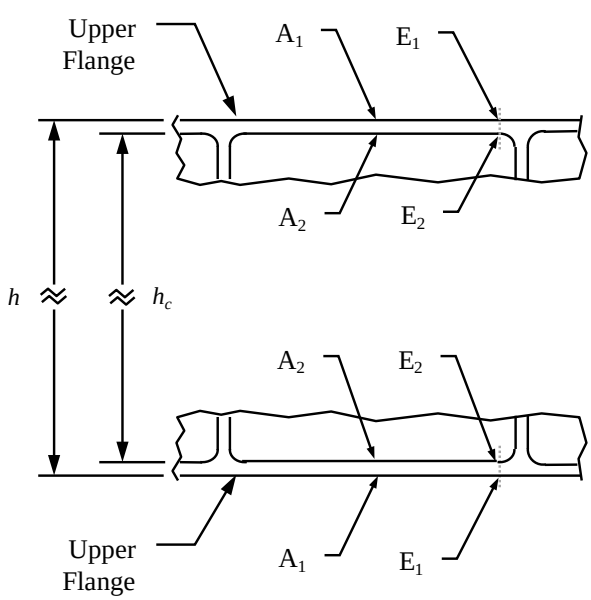

Copyright 2016 Lockheed Martin Corporation.
Note: The current version is always the version on the Lockheed Martin network.

Upper Flange							
Point	$f_{b,pr}$ (psi), Step (y)	$f_{b,sec}$ (psi), Step (z)	$f_{a,sec}$ (psi), Step (aa)	$f_{f,PB}$ (psi), Step (bb)	f_{be} (psi), Step (cc)	$f_{b_{y,PB}}$ (psi), Step (dd)	f_{tot} (psi), Steps (y)+(z)+(aa) +(bb)+(cc)+(dd)
A_1	-25,883	-4,720	-1,342	-1,085	-3,390	-5,200	-41620
A_2	-24,805	4,720	-1,342	-1,085	-3,249	5,200	-20561
E_1	-27,968	6,440	-1,342	-1,085	-3,390	7,120	-20225
E_2	-26,802	-6,440	-1,342	-1,085	-3,249	-7,120	**-46038**

Lower Flange							
Point	$f_{b,pr}$ (psi), Step (y)	$f_{b,sec}$ (psi), Step (z)	$f_{a,sec}$ (psi), Step (aa)	$f_{f,PB}$ (psi), Step (bb)	f_{be} (psi), Step (cc)	$f_{b_{y,PB}}$ (psi), Step (dd)	f_{tot} (psi), Steps (y)+(z)+(aa) +(bb)+(cc)+(dd)
A_1	25,883	-4,720	-1,342	-1,085	3,390	-5,200	16926
A_2	24,805	4,720	-1,342	-1,085	3,249	5,200	35547
E_1	27,968	6,440	-1,342	-1,085	3,390	7,120	**42491**
E_2	26,802	-6,440	-1,342	-1,085	3,249	-7,120	14064

The upper flange IML (Point E_2) and lower flange OML (Point E_1) at Section E-E are most critical for this example.

ff) Determine the strength and stability margins of safety for the upper and lower flanges:

<u>Upper Flange Strength:</u> Checked using the minimum of the crippling stress definition and F_{cu}. The crippling stress is calculated for the effective flange section shown; this includes a width of web, b_{eff}, calculated in Step (r).

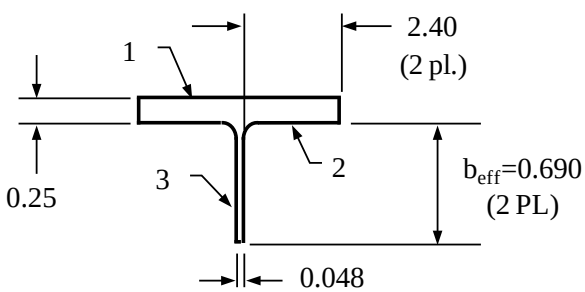

The crippling stress for the section is calculated in Example 6.6.4.5, Step (x):

$$F_{cc} = \frac{\Sigma(b\ t\ F_{cc})}{\Sigma(b\ t)} = 66{,}298 \text{ psi}$$

From Table 1b, F_{cu} = 64,200 psi, which is slightly less than the allowable crippling stress, F_{cc}. The upper flange strength margin of safety is calculated using Equation 6.6.3-45, with F_{cu} substituted for the crippling strength, F_{cc}:

$$MS_{ult} = \frac{F_{cu}}{f_{b,tot}} - 1$$

From Step (w), the maximum upper flange compression stress is at the Section E-E IML: $f_{b,tot}$ = -46,038 psi.

$$MS_{ult} = \frac{64{,}200\ psi}{46{,}038\ psi} - 1 = +0.39$$

Copyright 2016 Lockheed Martin Corporation.
Note: The current version is always the version on the Lockheed Martin network.

Upper Flange Stability: Checked using the flange buckling stress:

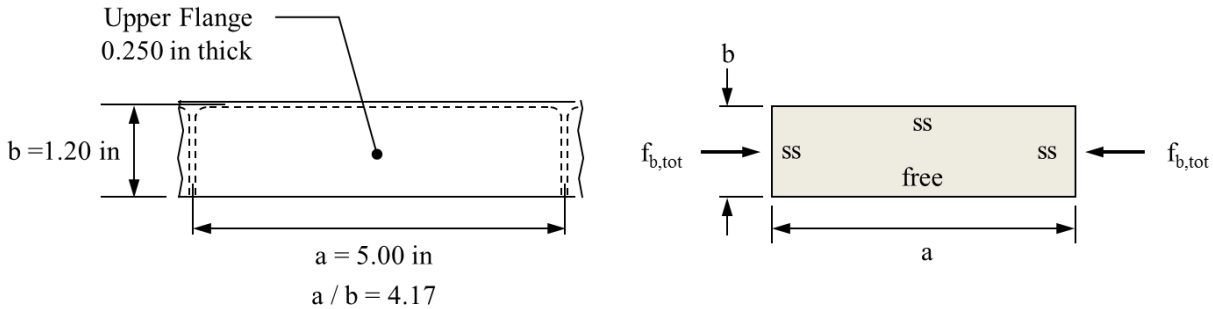

From Example 6.6.4.5, Step (x), the upper flange buckling stress is: F_c = 64.0 ksi at 180°F.

The upper flange buckling margin of safety is calculated using Equation 6.6.3-46:

$$MS_{ult} = \frac{F_c}{f_{tot}} - 1$$

The stress at the mid-bay is used for the flange stability analysis. From Step (w), the upper flange compression stresses at Section A-A are:
Point A_1: f_{tot} = -41,620 psi
Point A_2: f_{tot} = -20,561 psi

The average stress (at the flange mid-thickness) is:

$$f_{tot} = \frac{-41{,}620\ psi - 20{,}561\ psi}{2} = -31{,}091\ psi$$

The upper flange buckling margin of safety is:

$$MS_{ult} = \frac{64{,}000\ psi}{31{,}091\ psi} - 1 = +1.06$$

Lower Flange Strength: Calculated using Equation 6.6.3-47.

$$MS_{ult} = \frac{F_{tu}}{f_{b,tot}} - 1$$

From Table 1b, F_{tu}=67.20 ksi
From Step (w), the maximum lower flange tension stress is at the Section E-E OML: $f_{b,tot}$ = 42,491 psi.

$$MS_{ult} = \frac{67{,}200\ psi}{42{,}491\ psi} - 1 = +0.58$$

Copyright 2016 Lockheed Martin Corporation.
Note: The current version is always the version on the Lockheed Martin network.

The Margins of Safety are summarized as shown:

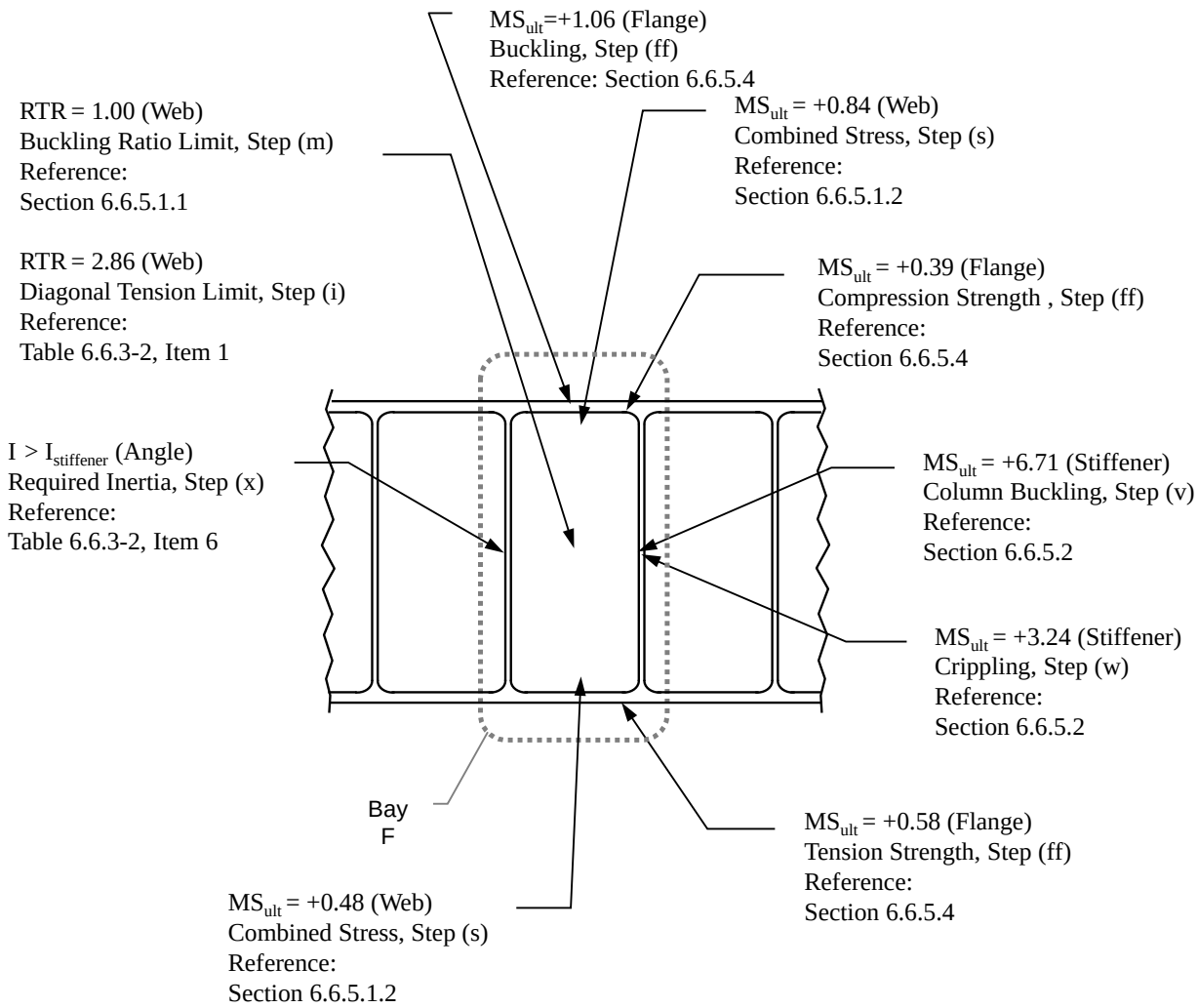

Note that the Margins of Safety are shown as calculated numerically, even where they are high (usually greater than +1.00 or +2.00). Refer to program policy regarding the reporting of high margins.

Copyright 2016 Lockheed Martin Corporation.
Note: The current version is always the version on the Lockheed Martin network.

6.7 Web Penetrations

6.7.1 Introduction and Nomenclature

Often there are requirements for penetrations through ribs or spar webs for electrical, hydraulic or fuel system routings, fuel slosh or as lightening holes. The analysis techniques for these holes differ depending on whether or not the beam web is shear resistant or is in a post buckled state. The term shear resistant means the web does not buckle under the applied shear load. The analysis is also dependent on the magnitude of loads present. In addition to the classical hand methods, which are somewhat limited in application, there are finite element based approaches.

Most of the methodologies presented in this section are based on the data developed in the tests described in References 6-34 through 6-36 and Reference 6-40. The methods are very limited because of the focus of the investigations in that era of airplane design. Spar webs and ribs were generally manufactured from built up sheet metal details. They were generally concerned only with static ultimate strength. Because of this focus, many of the existing methods do not concern themselves with the effect of the hole and its reinforcement on the initial buckling stress of the web. This section augments the existing data with FEM based studies as well as some guidelines and caveats about the various analytical methods for dealing with penetrations.

In general, the methodologies present in the following section are concerned with a single, circular hole located at the neutral axis of the bay where tension and compression loads are zero. There is no available data on multiple small holes, non-circular holes and empirical methods for combined loading. It is recommended that if this configuration exists, it should be approached with caution, through the use of a finite element model. The IDAT tool PACT may be useful in determining the elevated stress due to the presence of multiple holes in a bay; however, it does not currently calculate the eigenvalue associated with the configuration.

6.7.2 Determination of Initial Buckling Stress for Webs with Penetrations

The first thing the analyst needs to know when working with penetrations is whether or not the beam web in question buckles under the maximum applied load and with the penetration present. A finite element based study performed by Lockheed Ft Worth, formerly General Dynamics, Fort Worth Division, is documented in Reference 6-41. It systematically examined the predicted buckling load of a simply supported plate of varying *b/a* ratios, *i.e.*, panel width/panel length, with varying diameters of penetrations. This study also ran the case of no penetration, which compared well with the closed-form solution. Additionally further comparisons were made where there was industry or textbook data available for a limited range of *b/a* or *D/b* values with good correlation.

To simplify the approach, a single lower bound curve was generated, to allow the analyst to determine the critical buckling stress for a beam web with a hole present. This is particularly useful in initial design where beam geometry may not be fully defined. This curve, labeled “Initial Design Curve” is shown in Figure 6.7.2-1 and its equation is given by

$$K_{hole} = (1 - D/b)^{5/3}$$ **Equation 6.7.2-1**

where
D is the diameter of the web penetration (in)
b is the smallest dimension of the beam web between stiffeners (in)

Also shown in this figure are additional curves as a function of *b/a*. These provide less conservative predictions of the initial buckling stress of the web and may also be used to predict the effect of the hole on the initial buckling stress. Note that these curves are applicable only in the elastic range of the material.

Copyright 2016 Lockheed Martin Corporation.
Note: The current version is always the version on the Lockheed Martin network

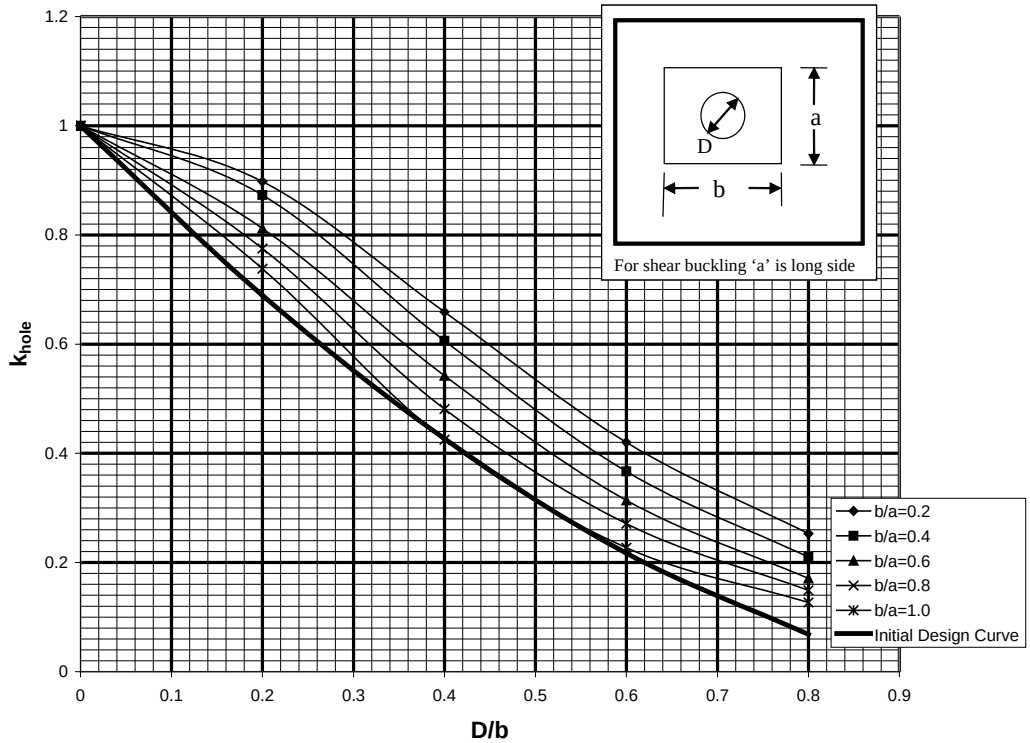

Figure 6.7.2-1 Reduction in Initial Buckling Stress Due to Hole[1]

To determine the buckling strength of the web, first determine the shear buckling stress (F_{scr}) for the given web for simple support boundary conditions using PM-4057 Section 10 without the hole. Then calculate K_{hole} from Equation 6.7.2-1 or determine the value from Figure 6.7.2-1. The reduced buckling allowable for the bay can then be determined from

$$F_{scr\text{-}hole} = F_{scr}K_{hole}$$ **Equation 6.7.2-2**

where
F_{scr} is the buckling stress of the bay without penetration (psi)
K_{hole} is the reduction parameter associated with the hole, from Equation 6.7.2-1

If the gross shear stress in the beam web is less than $F_{scr\text{-}hole}$, then the web is shear resistant. If the maximum gross shear stress exceeds $F_{scr\text{-}hole}$, then the web buckles. If the intent is to keep the web shear resistant in the presence of the hole, then either some reinforcement should be added or the thickness of the web must be adjusted until $F_{scr\text{-}hole}$ exceeds the applied stresses. Depending on the particular circumstances of the beam web being analyzed and scenarios outlined below, the addition of reinforcement, *e.g.*, flange, doubler, vertical stiffener, may be needed in any event.

[1] Below is a table of coefficients for the polynomial curve fit equations of the curves shown in Figure 6.7.2-1. It is valid for *D/b* <= 0.80. Extrapolation to values beyond D/h shown, can lead to erroneous results.

b/a	Constant	D/b	D/b^2	D/b^3	D/b^4
0.2	1.0	0.142083	-4.16979	4.88542	-1.69271
0.4	1.0	0.137500	-5.15625	7.06250	-2.96875
0.6	1.0	-0.42708	-3.50312	5.11458	-2.10937
0.8	1.0	-0.51125	-4.48229	7.84375	-3.88021
1.0	1.0	-0.67708	-4.80937	9.17708	-4.76562

Copyright 2016 Lockheed Martin Corporation.
Note: The current version is always the version on the Lockheed Martin network

6.7.3 Holes in Shear Resistant Webs

This subsection includes separate analyses for flanged holes in flat webs, flanged holes in vertically stiffened webs and circular holes with doublers. These methodologies are based on the empirical data discussed in References 6-34 through 6-36 and 6-40. Shear resistant beam webs are those which do not buckle under the applied load. In this case, the buckling state of the beam is established ignoring the hole in the web, that is, the beam is shear resistant before adding the hole. None of the methods in this section provide any insight into the buckled state after the hole is added.

In Reference 6-34 some of the specimens were manufactured for assembly using drilled rather than reamed holes. It was noted that the results from those specimens showed failure at approximately 10 percent lower stress level. It was hypothesized that this was due to the play of the fastener in the hole. All tests were run using rivets. The analyst should be cautioned that these methodologies are valid only in structure with reamed holes and hole-filling or interference fit fasteners. Reductions in allowable load would be required for structure built with clearance fit fasteners.

6.7.3.1 Flanged Holes in Flat Unstiffened Webs

In beams which are lightly loaded or very shallow, a flanged hole can serve both as a stiffening member and an access hole for systems to pass through. These beams must be shear resistant because testing has shown that the flanges will crack under repeated application of loads due to buckling. If the beam is not shear resistant, a ring doubler is a better choice and is discussed in Section 6.7.4.2. Flanged holes in flat unstiffened webs were investigated experimentally in References 6-34 through 6-36. These holes are located at the neutral axis of the beam or web to minimize any interactions between in-plane axial loads and shear loads. This axial / shear interaction has been investigated experimentally specifically in relation to flanged holes but not sufficiently to provide an analytical approach. However, this interaction has been shown to cause both static and fatigue failure of the flange in test. In the case of multiple penetrations, they are generally equally spaced along the length of the beam. Due to the limitations on the available test data there are specific ranges of applicability, defined in Table 6.7.3-1. Refer to Figure 6.7.3-1 for a definition of the geometry and minimum flange length. If the parameters of a specific design fall outside of those listed in the table, then options open to the analyst might include addition of stiffeners, choice of a different means of reinforcement, use of a detailed finite element model or performing full scale static testing.

Table 6.7.3-1 Parameter Limitations for Flanged Holes in Lightly Loaded Beams

$0.25 \le D/h \le 0.75$
$40 \le h/t \le 250$
$0.30 \le D/b \le 0.70$
$0.016 \le t \le 0.125$
where D = web hole diameter h = the height of the web: cap-centroid to cap-centroid for integral caps; fastener-centerline-to-fastener-centerline for mechanically attached caps. t = web thickness b = web-hole-to-web-hole spacing

Copyright 2016 Lockheed Martin Corporation.
Note: The current version is always the version on the Lockheed Martin network

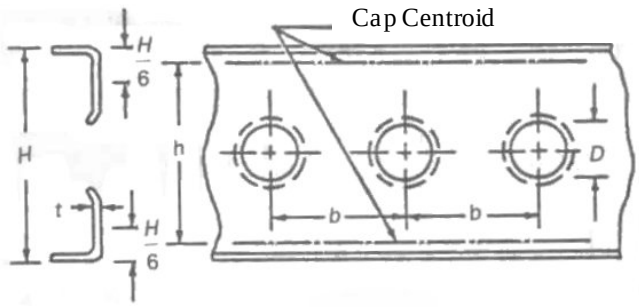

Integral Cap: Cap Depth assumed to be H/6

45 Flange

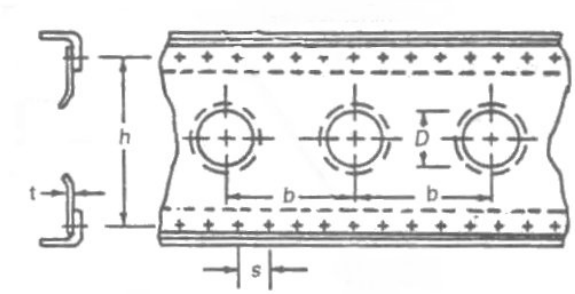

Mechanically Fastened Cap

Minimum Flange Length								
D(in)	2	2.5	3	3.5	4	4.5	5	6
l (in)	0.25	0.30	0.40	0.45	0.50	0.50	0.50	0.55

Figure 6.7.3-1 Web Penetration Geometry Definition

If the penetration and beam geometry fall within the parameters listed in Table 6.7.3-1 the ultimate allowable gross shear stress, F_s, can be obtained through the use of the web gross area collapse stress curve and a hole correction factor curve. Many of the references listed provide the web gross area collapse stress in terms of a specific material, generally aluminum 2024-T3 (since most of the empirical data was developed using this alloy) and, in some cases, 7075-T6. It is presented in this manual in terms of a nondimensionalized shear web collapse parameter $K_{collapse}$, which can be used with a given material's ultimate shear stress F_{su} to calculate the ultimate allowable web shear stress, F_s. This curve is presented in Figure 6.7.3-2.

A polynomial curve fit of the curves shown in Figure 6.7.3-2 resulted in the following equation:

$$K_{collapse} = 1.0770642 - 0.015502x + 0.000108721x^2 - 3.63411x10^{-7}x^3 + 4.68180x10^{-10}x^4$$

Equation 6.7.3-1

where
x = h/t (unstiffened webs) or b_s/t (stiffened webs)
h is the beam web height as defined in Figure 6.7.3-1 (in)
t is the web thickness (in)
b_s is the distance between stiffeners (in)
Note: If this equation is used in lieu of the curve it is important to use all terms to the accuracy indicated.

Copyright 2016 Lockheed Martin Corporation.
Note: The current version is always the version on the Lockheed Martin network

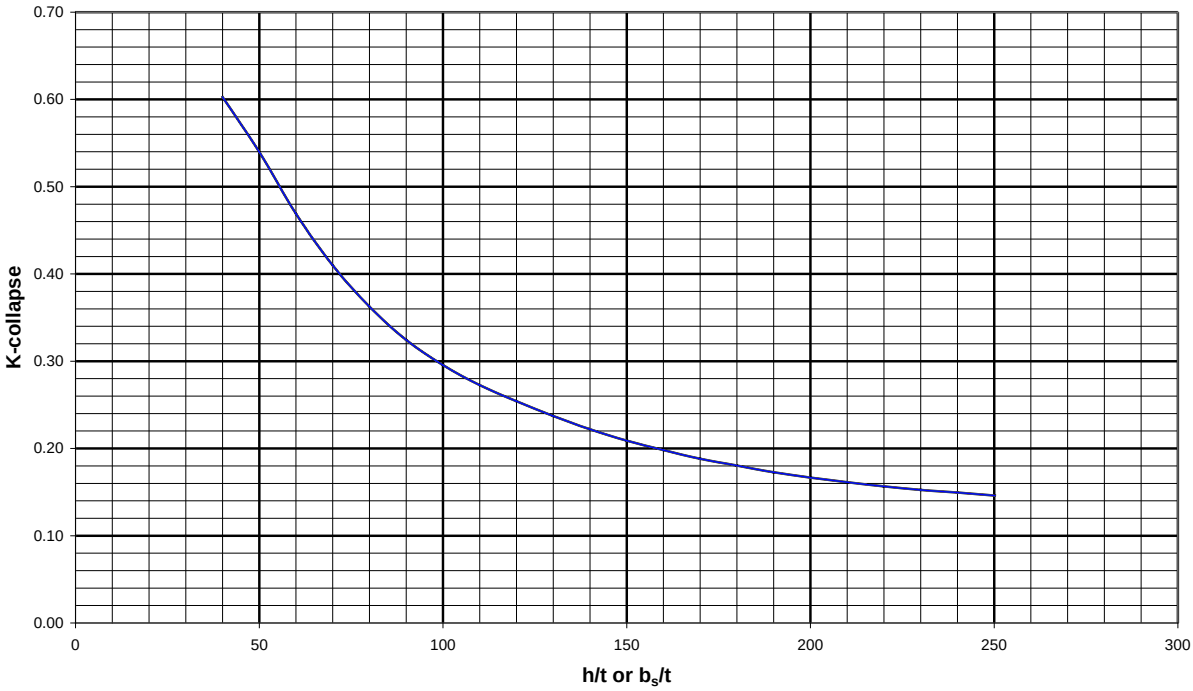

Use h/t for unstiffened beam webs and b_s/t for stiffened beam webs.
See Figure 6.7.3-1 for definition of h, and Figure 6.7.3-4 for definition of b_s.

Figure 6.7.3-2Non-Dimensionalized Web Shear Collapse Parameter

To calculate the allowable ultimate web shear stress, F_s, determine $K_{collapse}$ from Figure 6.7.3-2 or Equation 6.7.3-1, the ultimate shear strength for the web material, and the hole correction factor, K_1, from Figure 6.7.3-3. For a given web height, thickness and loading the minimum weight design will be achieved when hole diameter and hole spacing are chosen to lie on the line labeled 'optimum' in Figure 6.7.3-3. Note that the optimum value is independent of thickness.

The allowable ultimate web shear stress is given by

$$F_s = F_{su} K_{collapse} K_1 \qquad \textbf{Equation 6.7.3-2}$$

where
F_{su} is the ultimate allowable shear stress of the material from Reference 6-4 or 6-5 (psi)
$K_{collapse}$ is the nondimensionalized web shear collapse parameter from Equation 6.7.3-1 or Figure 6.7.3-2.
K_1 is the hole correction factor from Figure 6.7.3-3

This represents the ultimate shear capability of the web with the hole present. In theory, catastrophic failure results when this stress level is reached. This value does not provide any insight into whether or not the beam web buckles, thus if there is a specific aircraft program requirement for "no buckling of webs with holes" this method does not ensure compliance. Additionally, since this is a failure check, a margin of safety is calculated, rather than a ratio-to-requirement.

Copyright 2016 Lockheed Martin Corporation.
Note: The current version is always the version on the Lockheed Martin network

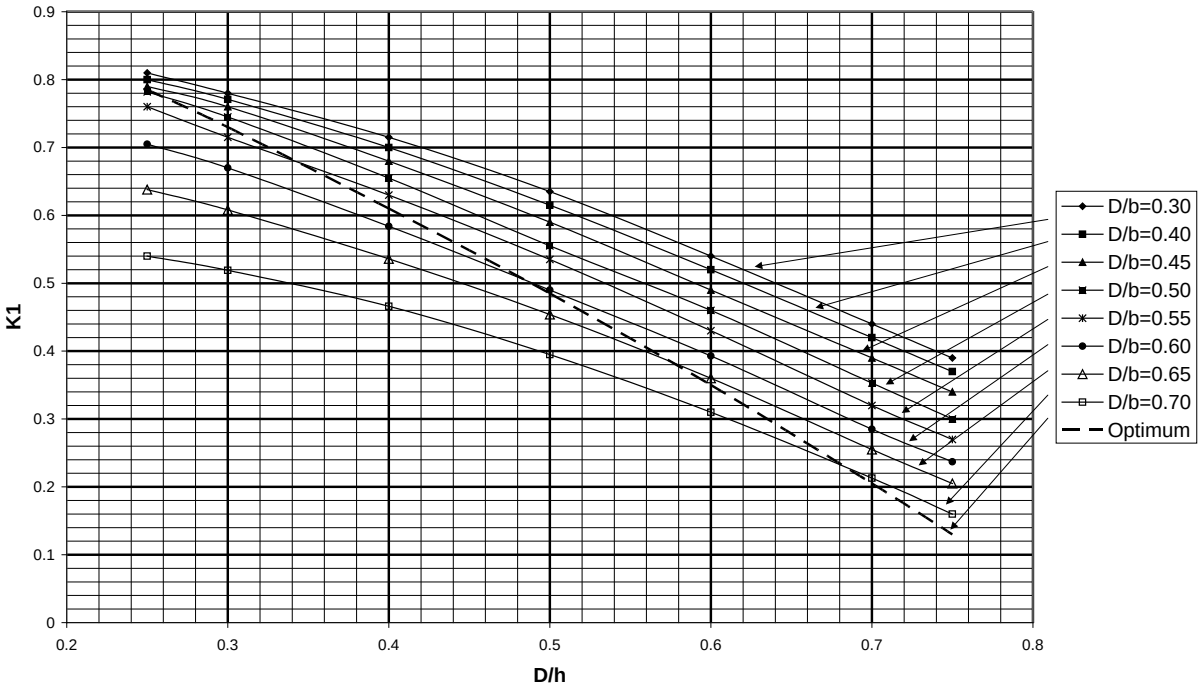

See Figure 6.7.3-1 for definition of h, b

Figure 6.7.3-3 Hole Correction Factor (K_1)[2]

The applied shear stress can come from several sources. If only the total shear, *V* (lbs) is available at a given location then f_s can be calculated as follows

$$f_s = V/(ht) \qquad \textbf{Equation 6.7.3-3}$$

where
V is the total vertical shear at a cut along the beam (lb)
h is the height of the beam as shown in Figure 6.7.3-1
t is the thickness of the web of the beam (in)

If a finite element model is available, the shear may be obtained directly from the elements in a given beam web of the finite element model. Since this is a gross area stress calculation, care must be used in using the stresses directly from the finite element model as the thickness of the web may have been reduced in some manner to account for the presence of the hole. Also if the model is finely gridded an average bay shear stress may better represent the stress state than the peak stresses in an individual element.

[2] Below is a table of coefficients for the polynomial curve fit equations of the curves shown in Figure 6.7.3-3. It is valid for 0.25 <= *D/h* <= 0.75 Extrapolation to values beyond D/h shown, can lead to erroneous results.

D/b	Constant	D/h	D/h^2	D/h^3	D/h^4
0.30	0.996895	-1.15695	2.770839	-5.28126	2.940922
0.40	0.869000	-0.0006	-1.14562	0.093171	0.336727
0.45	0.807982	0.561499	-3.17052	2.791967	-0.89619
0.50	0.768691	1.154891	-6.11035	7.754495	-3.69791
0.55	1.147311	-2.62625	6.44283	-9.82201	5.094403
0.60	0.830007	-0.2631	-1.0257	0.320866	0.141821
0.65	0.806893	-0.88217	1.547658	-3.32031	1.862873
0.70	0.571103	0.115135	-0.9664	-0.02472	0.179239
Optimum	1.040468	-0.93818	-0.31295	-0.0573	-0.02175

Copyright 2016 Lockheed Martin Corporation.
Note: The current version is always the version on the Lockheed Martin network

It is better practice to obtain the running shear load *q (lb/in)* and calculate the stress from

$$f_s = q/t \qquad \textbf{Equation 6.7.3-4}$$

where
q is the average running shear from the FEM (lb/in)
t is the thickness of the web of the beam (in)

The margin of safety can then be calculated from

$$M.S.\ (gross) = F_s/f_s - 1 \qquad \textbf{Equation 6.7.3-5}$$

where
F_s= allowable ultimate shear stress from Equation 6.7.3-2
f_s = applied gross shear stress from Equation 6.7.3-3 or Equation 6.7.3-4

The total net shear in the web also should be checked using horizontal and vertical cuts through the web penetration holes and, additionally, the web/cap fastener line:

$$f_{s-net-horizontal} = \frac{q}{t}\left[\frac{b}{b-D}\right] \qquad \textbf{Equation 6.7.3-6}$$

where (reference Figure 6.7.3-1)
q is the shear flow in the web (lb/in)
t is the thickness of the beam web (in)
b is the hole spacing (in)
D is the diameter of the web hole (in)

$$f_{s-net-vertical} = \frac{q}{t}\left[\frac{h}{h-D}\right] \qquad \textbf{Equation 6.7.3-7}$$

where (reference Figure 6.7.3-1)
h is the web height (in)

$$f_{s-net-fastener} = \frac{q}{t}\left[\frac{s}{s-D}\right] \qquad \textbf{Equation 6.7.3-8}$$

where (reference Figure 6.7.3-1)
s is the web to cap fastener spacing (in)

For beams with integral caps, the check performed using Equation 6.7.3-8 is unnecessary.

The margin of safety for this net section check would then be calculated by:

$$M.S.\ (net\ section) = F_{su}/f_{s\text{-}net} - 1 \qquad \textbf{Equation 6.7.3-9}$$

where
F_{su} is the ultimate shear strength of the material (psi)
$f_{s\text{-}net}$ is the maximum of ($f_{s\text{-}net\text{-}horizontal}$, $f_{s\text{-}net\text{-}vertical}$, $f_{s\text{-}net\text{-}fastener}$)

For webs with mechanically fastened caps, the presence of the web penetration causes a peaking of the shear loads. As result the web to cap fasteners should be sized by the greater of the following

$$q_r = maximum\left[1.25q\ or\ 0.67q\left(\frac{b}{b-D}\right)\right] \qquad \textbf{Equation 6.7.3-10}$$

where
q is the average shear flow in the web (lb/in)
b is the hole-to-hole spacing (in) as defined in Figure 6.7.3-1
D is the web penetration diameter (in)

Copyright 2016 Lockheed Martin Corporation.
Note: The current version is always the version on the Lockheed Martin network

The total fastener load can then be calculated using the fastener spacing, *s*,

$$P_r = q_r s \qquad \textbf{Equation 6.7.3-11}$$

where
q_r is the shear load on the rivet from Equation 6.7.3-10 (unstiffened beam) or Equation 6.7.3-18 (stiffened beam)
s is the web-to-cap fastener spacing (in)

The allowable joint load (P_{allow}) can be obtained from SM65, Reference 6-1, References 6-4 or 6-5. These allowables are based on test data for the fastener and joint material combinations and transition from a bearing dominated failure mode to a fastener-shear dominated failure mode as the constituent joint materials thicken. A margin of safety for the web-to-cap fasteners can then be written as

$$M.S.(joint) = P_{allow} / P_r - 1 \qquad \textbf{Equation 6.7.3-12}$$

where
P_{allow} is the allowable joint load (lbs)
P_r is the applied fastener load (lbs) from Equation 6.7.3-11.

Although a fitting factor is not shown in this equation, the analyst should always refer to program specific guidance on the magnitude and applicability of the use of a fitting factor. See Section 5.2.3 for further discussion.

Just as a general note, if the equivalent thickness of the web with penetration is desired for the calculation of weight or for use in finite element models it may be calculated as follows:

$$t_{eq} = t\left(1 - \frac{\pi D^2}{4hb}\right) \qquad \textbf{Equation 6.7.3-13}$$

where
t is the web thickness
D is the diameter of the web penetration (in)
h is the height of the web (in) as defined in Figure 6.7.3-1
b is the hole to hole spacing (in) as defined in Figure 6.7.3-1

6.7.3.2 Flanged Holes in Stiffened Webs

In beams which are moderately loaded, a flanged hole can serve both as a stiffening member and an access hole for systems to pass through. These beam webs are shear resistant and have stiffeners to break up the bays to help resist buckling. The holes should be located at the neutral axis of the beam web to minimize any interactions between in-plane axial loads and shear loads. This axial / shear interaction has been investigated experimentally specifically in relation to flanged holes but not sufficiently to provide an analytical approach. This interaction has been shown to cause both static and fatigue failure of the flange in test. If the penetration is significantly off the neutral axis and there are beam axial loads present, an alternative stiffening method, such as ring doublers, is recommended.

A bay is defined as the web segment between a single pair of stiffeners. This method examines a single penetration per bay arranged, preferably, within h/8 of the neutral axis of the beam. The holes are assumed evenly spaced. Figure 6.7.3-4 shows the geometry and nomenclature for this type of web.

Copyright 2016 Lockheed Martin Corporation.
Note: The current version is always the version on the Lockheed Martin network

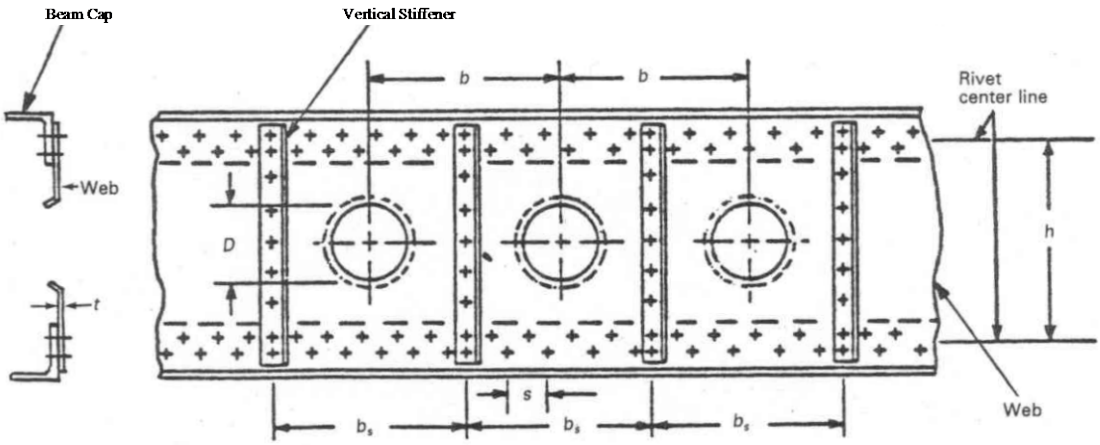

Figure 6.7.3-4 Web Penetration Geometry Definition – Moderately Loaded Shear Resistant Beams

Table 6.7.3-2 lists the geometry limits for applicability of this method. These limits are based on the tests performed to substantiate the methodology. If the parameters of a specific design fall outside of those listed in the table, then options open to the analyst might include addition of stiffeners, choice of a different means of reinforcement, use of a detailed finite element model or performing full scale static testing.

Table 6.7.3-2 Parameter Limitations for Flanged Holes in Moderately Loaded Stiffened Beams

$0.235 \le b_s/h \le 1.0$
$115 \le h/t \le 1500$
$D/h \le 0.50$
$0.025 \le t \le 0.125$
$D/b_s <= 0.85- 0.1(h/b_s)$ Prevents net shear failure between penetrations.
$t_{stiff} \ge t$
where b_s = web stiffener spacing (in) h = the height of the web: cap centroid to cap centroid for integral caps; fastener centerline to fastener centerline for mechanically attached caps. (in) t = web thickness (in). D = web hole diameter (in). t_{stiff} = the stiffener flange thickness attaching to the web (in).

In addition, there are minimum area and moment of inertia requirements given in Equation 6.7.3-14 and Equation 6.7.3-15

$$A_{st} => [\ 0.385-0.08(b_s/h)^3]b_s t \qquad \textbf{Equation 6.7.3-14}$$

where
A_{st} is the stiffener area (in^2)
b_s is the web stiffener spacing (in)
t is the web thickness (in)
h is the height of the web (in) as defined in Figure 6.7.3-4

Copyright 2016 Lockheed Martin Corporation.
Note: The current version is always the version on the Lockheed Martin network

$$I_{st} \geq \frac{F_s b_s h^3}{12E(h-D)}$$ **Equation 6.7.3-15**

where
I_{st} is the stiffener moment of inertia about its center of gravity and parallel to the web line, not including any effective web material (in^4)
F_s is the ultimate allowable gross shear stress from Equation 6.7.3-16
t is the web thickness (in)
b_s is the web stiffener spacing (in)
h is the height of the web (in) as defined in Figure 6.7.3-4
E is the Modulus of Elasticity (psi)
D is the diameter of the web penetration (in)

If the stiffeners do not meet these minimum requirements, they should be modified to do so. Then once the configuration meets all of the above constraints, the gross area shear stress is given by

$$F_s = F_{su} K_{collapse} K_2$$ **Equation 6.7.3-16**

Where
F_{su} is the material ultimate allowable shear stress (psi)
$K_{collapse}$ is the nondimensionalized web shear collapse parameter from Equation 6.7.3-1 or Figure 6.7.3-2
K_2 is the hole correction factor from Figure 6.7.3-5.

Note that unlike the hole correction factor for unstiffened webs, K_1, which is always less than one, K_2 can be greater than 1, indicating that the flanged holes in stiffened webs can provide an increased load carrying capability.

Copyright 2016 Lockheed Martin Corporation.
Note: The current version is always the version on the Lockheed Martin network

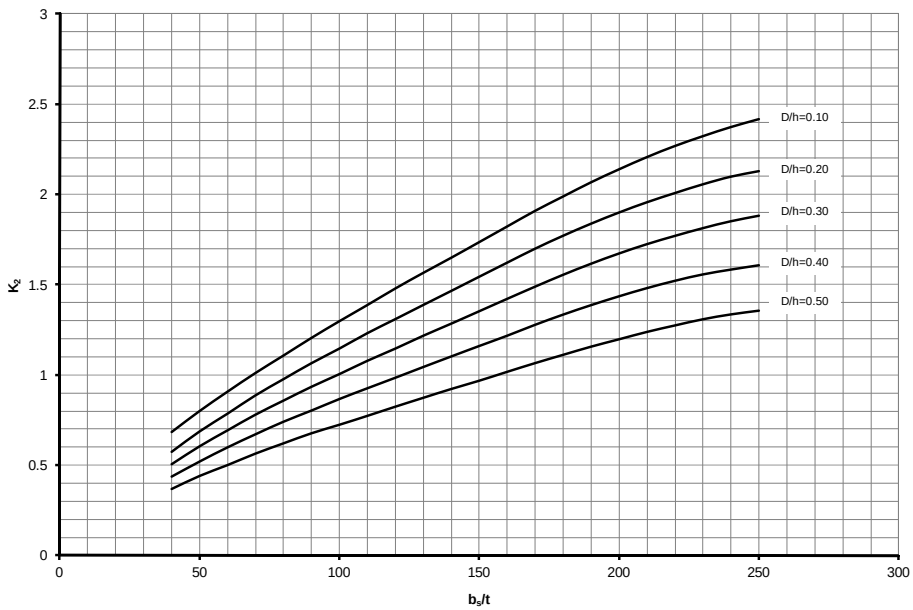

Figure 6.7.3-5 Correction Factor K_2 for Calculation of Allowable Shear Stress[3]

The applied shear stress can come from several sources. If only the total shear, *V (lbs)* is available at a given location then f_s can be calculated from Equation 6.7.3-3. If a finite element model is available, the shear may be obtained directly from the elements in a given bay of the finite element model. Since this is a gross area stress calculation, care must be used in using the stresses directly from the finite element model as the thickness of the web may have been reduced in some manner to account for the presence of the hole. It is better to obtain the running shear load *q (lb/in)* and calculate the stress from Equation 6.7.3-4. The margin of safety can then be calculated from

$$M.S.\ (gross) = F_s/f_s - 1 \qquad \textbf{Equation 6.7.3-17}$$

where
F_s= allowable ultimate shear stress from Equation 6.7.3-16
f_s = applied gross shear stress from Equation 6.7.3-3 or Equation 6.7.3-4.

Web net shear calculations are not required since Table 6.7.3-2 includes a parameter limiting hole size based on panel rectangularity to preclude net shear failure.

For webs with mechanically fastened caps, the presence of the web penetration causes a peaking of the shear loads. The literature provides a somewhat conservative approach for the fastener analysis to preclude the unzipping of the web from the stiffener or cap by sizing the fasteners to the maximum possible load. As result the web to cap fasteners should be sized by the following

$$q_r = 1.25 F_s t \left[\frac{h}{h-D} \right] \qquad \textbf{Equation 6.7.3-18}$$

[3] Below is a table of coefficients for the polynomial curve fit equations of the curves shown in Figure 6.7.3-5. It is valid for ranges of *D/h* shown in figure and 40<= b_s/t <= 250. Extrapolation to values beyond *D/h* shown or b_s/t specified, can lead to erroneous results.

D/h	Constant	b_s/t	$(b_s/t)^2$	$(b_s/t)^3$	$(b_s/t)^4$
0.1	0.140367	0.016002	-7.09395×10^{-5}	3.29×10^{-7}	-6.22×10^{-10}
0.2	0.039738	0.016109	-7.96489×10^{-5}	3.62×10^{-7}	-6.72×10^{-10}
0.3	0.020289	0.0148	-7.94451×10^{-5}	3.69×10^{-7}	-6.75×10^{-10}
0.4	-0.002066	0.013667	-8.15782×10^{-5}	3.87×10^{-7}	-7.06×10^{-10}
0.5	0.000986	0.011408	-6.71044×10^{-5}	3.10×10^{-7}	-5.4973×10^{-10}

Copyright 2016 Lockheed Martin Corporation.
Note: The current version is always the version on the Lockheed Martin network

where
F_s= allowable ultimate shear stress from Equation 6.7.3-16
t is the web thickness (in)
h is the height of the web (in) as defined in Figure 6.7.3-4
D is the web penetration diameter (in)

The total fastener load between the web and cap can then be calculated using Equation 6.7.3-11. The allowable joint load (P_{allow}) can be obtained from SM65, Reference 6-1, References 6-4 or 6-5. These allowables are based on test data for the fastener and joint material combinations and transition from a bearing dominated failure mode to a fastener-shear dominated failure mode as the constituent joint materials thicken. A Margin of Safety for the web to cap fasteners can be written using Equation 6.7.3-12.

Stiffener to cap fasteners should be sized to transfer the following stiffener end shear load. Fasteners adjacent to the stiffener, common to the web and cap, which could be considered acting as a gusset, may be included in the fasteners carrying this load.

$$P_{end} = 0.0024 A_{st} F_s \left(\frac{b_s}{t} \right) \left[\frac{h}{h-D} \right]$$ **Equation 6.7.3-19**

where
F_s= allowable ultimate shear stress from Equation 6.7.3-16
A_{st} = stiffener area (in^2)
b_s = stiffener spacing (in)
t is the web thickness (in)
h is the height of the web (in) as defined in Figure 6.7.3-4.
D is the web penetration diameter (in)

The load carried by each fastener is given by

$$P_{st} = P_{end}/n_{eff}$$ **Equation 6.7.3-20**

where
P_{end} = Stiffener end load (lbs) from Equation 6.7.3-19
n_{eff} is the number of effective fasteners

Since these fasteners are at the corner of the bay, where the cap intersects the stiffener, they will also carry load components parallel with the cap, given by Equation 6.7.3-11. The total fastener load is therefore a vector sum of the two load components.

$$P_{fas} = \sqrt{P_{st}^2 + P_r^2}$$ **Equation 6.7.3-21**

where
P_{st} = fastener load in cap to stiffener fasteners due to stiffener end load (lb). Equation 6.7.3-20
P_r= fastener load in the cap to web stiffeners due to web shear (lbs). Equation 6.7.3-18 with Equation 6.7.3-11

The allowable joint load (P_{allow}) can be obtained from SM65, Reference 6-1, Reference 6-4 or 6-5. These allowables are based on test data for the fastener and joint material combination. These allowables are based on test data for the fastener and joint material combinations and transition from a bearing dominated failure mode to a fastener-shear dominated failure mode as the constituent joint materials thicken. A margin of safety for the stiffener to cap fasteners can then be written as

$$M.S.(joint) = P_{allow}/ P_{fas} - 1$$ **Equation 6.7.3-22**

where
P_{allow} is the allowable fastener shear load (lbs)
P_{fas} is the applied fastener load (lbs) from Equation 6.7.3-21

Copyright 2016 Lockheed Martin Corporation.
Note: The current version is always the version on the Lockheed Martin network

Although a fitting factor is not shown in this equation, the analyst should always refer to program specific guidance on the magnitude and applicability of the use of a fitting factor. Reference Section 5.2.3 for further discussion of fitting factors.

If the selected fastener does not provide a positive margin, decreasing the fastener spacing (but not less than 4D), increasing the fastener diameter or changing the type of fastener would be possible options to improving the margin of safety.

In addition, to preclude secondary effects from causing a premature fastener failure, the required fastener tensile capability (per inch) is given by Equation 6.6.3-34. This ensures the fastener system and diameter have compatible capability with the web material and fastener spacing. As discussed in Section 6.6.3.3.4, the fastener tension allowable, $P_{all,t}$, is the smaller of the fastener pull-through allowable, given by Equation 6.6.3-35 and the fastener tensile allowable from IDAT/FDB, Reference 6-1/SM 65 or Reference 6-4 or 6-5. The margin of safety can then be expressed by

$$M.S.(tension) = P_{all,t} / P_u - 1$$ **Equation 6.7.3-23**

where
$P_{all,t}$ is the fastener tension allowable, minimum of fastener tensile strength and fastener pull-though strength
P_u is the applied tension load from Equation 6.6.3-34.

The equivalent thickness of the web, for calculation of weight, can be obtained from

$$t_{eq} = t\left(1 - \frac{\pi D^2}{4hb_s} + \frac{A_{st}}{b_s t}\right)$$ **Equation 6.7.3-24**

where
t is the web thickness
D is the diameter of the web penetration (in)
h is the height of the web (in) as defined in Figure 6.7.3-4
A_{st} = stiffener area (in^2)
b_s is the stiffener spacing (in) as defined in Figure 6.7.3-4.

Since this also includes an increment for the effective stiffener, this calculation should not be used in a finite element model. Rather the stiffeners should be modeled, either lumped or individually, and the effective thickness be based on the web alone, per Equation 6.7.3-13.

6.7.3.3 Circular Holes with Doublers

For holes in machined beam webs, which require reinforcement, or in cases where a 45 degree flange is not desirable, the best solution is a ring doubler. This type of reinforcement can be used in both shear resistant and diagonal tension beams. This analytical technique is presented in Section 6.7.4.2 under Diagonal Tension Beams.

6.7.4 Holes in Diagonal Tension Webs

6.7.4.1 Unreinforced Circular Holes

Reference 6-37 provides an analysis technique for a single unreinforced centrally located circular hole in a partial tension field beam. It provides reduction factors for the allowable web shear stress, forced crippling stress of stiffeners and web to stiffener fasteners as calculated using the diagonal tension methodology described elsewhere in that document. The parameter limitations on the use of this method are outlined in Table 6.7.4-1.

Note that while flange holes and ring doublers can provide additional stiffness to the web, the use of a hole with no flange or reinforcement of any type ALWAYS REDUCES the web's ability to carry load and should be used with

Copyright 2016 Lockheed Martin Corporation.
Note: The current version is always the version on the Lockheed Martin network

caution. At a diameter of approximately 0.75 inch, the reduction in allowable is no more than 10% for any $(t_{st}/t)/(b_s/h)$ ratio; hence that will be the recommended maximum hole size for this application, without reinforcement. Holes of greater size (up to 5.875 in, with appropriate *D/h* limitations) may be used, but the analyst is strongly cautioned that with increasing *D/h* ratios, there will be more and more significant reductions in over all beam stiffness which should be carefully examined and accounted for. If there are multiple small unreinforced holes in a single bay then the analysis should be conducted on a hole of cross section equivalent to the total removed area.

Table 6.7.4-1 Parameter Limitations for Unreinforced Holes in Tension Field Beams

$0.020 \le t \le 0.132$
$0.040 \le t_{st} \le 0.079$
$7.0 \le b_s \le 18.0$
$7.4 \le h \le 19.4$
$D \le 5.875$; $D \le 0.75$ recommended
$D/h \le 0.50$
where t = web thickness (in) t_{st} = stiffener thickness (in) b_s = web stiffener spacing (in) h = the height of the web: cap centroid to cap centroid for integral caps; fastener centerline to fastener centerline for mechanically attached caps (in). D = web hole diameter (in).

This method reduces the allowable shear stress F_s, of Section 6.6.3.1.3, using the following equation

$$F_{all} = F_{all}^{*}\left[\frac{tb_s(b_s - D) + A_{u,e}DK_3}{K_4 t b_s^2}\right] \qquad \textbf{Equation 6.7.4-1}$$

where
F_{all}^* is the allowable diagonal tension web shear stress from Section 6.6.3.1.3 (psi)
t is the web thickness (in)
b_s is the stiffener spacing as shown in Figure 6.7.3-4 (in).
D is the diameter of the hole (in)
$A_{u,e}$ is the cross-sectional area of the stiffener (upright) as defined in Equation 6.6.3-9
K_3 is from Figure 6.7.4-1
K_4 is from Figure 6.7.4-2

In addition to the web stress allowable, the forced crippling allowable, $F_{o,e}$, of the upright is reduced as well. The following equation should be used to modify $F_{o,e}$ from Section 6.6.3.2.3.

$$F_{o\text{-}hole} = F_{o,e}/(1 + D/b_s) \qquad \textbf{Equation 6.7.4-2}$$

where
$F_{o,e}$ is the forced crippling allowable from Equation 6.6.3-21
D is the diameter of the hole (in)
b_s is the stiffener spacing (in)

And, finally the fastener applied tensile load calculated from Section 6.6 should be increased as shown in the following equation

$$q_{t\text{-}hole} = q_t(1 + D/b_s) \qquad \textbf{Equation 6.7.4-3}$$

where
q_t is the applied fastener net tension load from Section 6.6 (lbs/in)
D is the diameter of the hole (in)
b_s is the stiffener spacing (in)

Copyright 2016 Lockheed Martin Corporation.
Note: The current version is always the version on the Lockheed Martin network

Margins of Safety for web shear, forced crippling of uprights and fastener tension loading should be calculated per the appropriate analysis check of Section 6.6 using these modified values.

Parameters K_3 and K_4 used for calculating the web strength in Equation 6.7.4.-1 are given by Figures 6.7.4-1 and 6.7.4-2

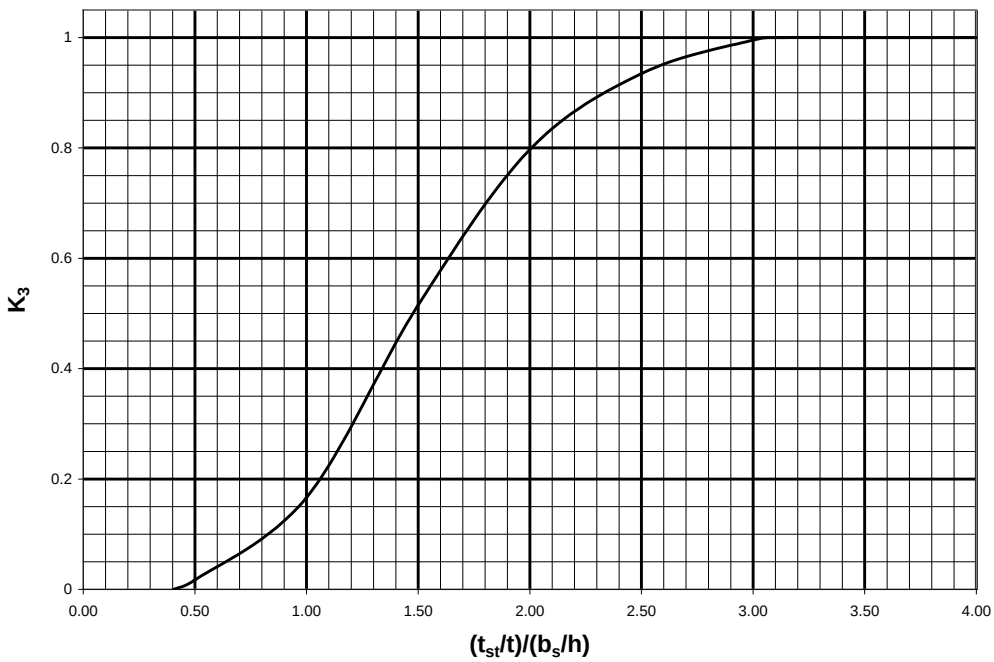

Figure 6.7.4-1 Parameter K_3 for Unreinforced Hole Allowable Web Shear Calculation[4]

[4] Polynomial curve fit equation for this figure is: $K_3 = 7.24\text{x}10^{-10} - 0.74522x + 4.370751x^2 - 10.0556x^3 + 12.17293x^4 - 7.90673x^5 + 2.808511x^6 - 0.51656x^7 + 0.038566x^8$ valid for $0.405 < x < 3.15$, where $x = (t_{st}/t)/(b_s/h)$.
For $x \leq 0.405$ $K_3 = 0$ and $x \geq 3.15$, $K_3 = 1.0$.

Copyright 2016 Lockheed Martin Corporation.
Note: The current version is always the version on the Lockheed Martin network

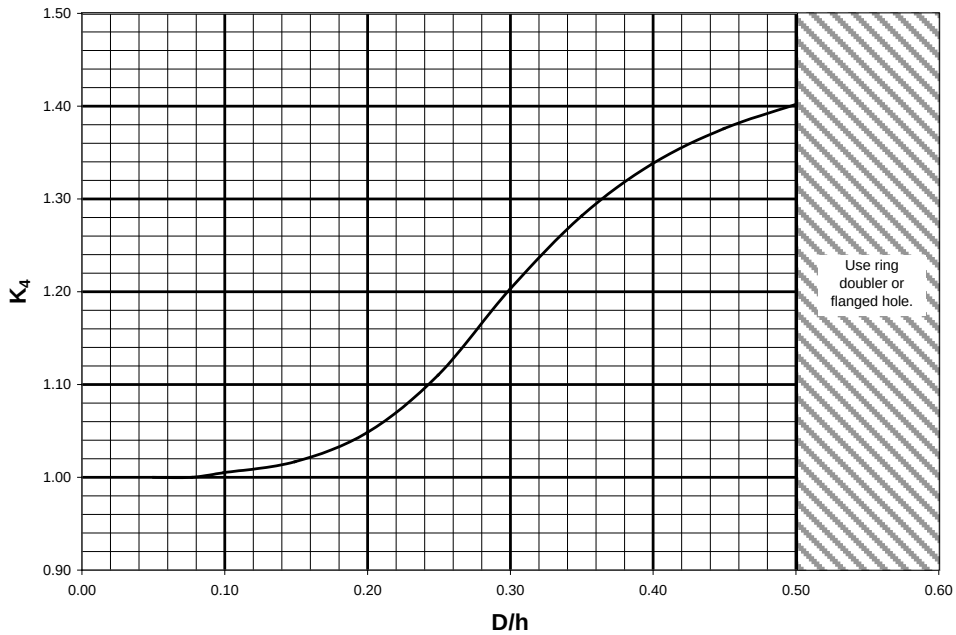

Figure 6.7.4-2 Parameter K_4 for Unreinforced Hole Allowable Web Shear Calculation[5]

6.7.4.2 Circular Holes with Doublers

For holes in diagonal tension or shear resistant webs which require reinforcement, the best solution is a ring doubler. The ring can be mechanically fastened with a minimum of two staggered rows of fasteners, integrally machined or chem-milled. Testing, described in Reference 6-39 has shown that the ring carries the web shear load as a tension load at 45 degrees across the panel. The ring beams the load around the hole and returns it to the web on the far side of the hole. In testing, the specimens failed in tension at 45 degrees from the horizontal. The advantage of the ring doubler is that it is lighter and cheaper to manufacture and analyze than a multi-bay reinforcement or simple thickening the web over multiple bays. If sized properly, the ring doubler allows for a penetration to be placed in the web with no degradation to the shear capability of the web.

When the ring doubler is integral, consideration of the transition from the reinforcement to the parent material is required for durability concerns. It is recommended that the minimum fillet radius at the transition from the pad up should be the larger of the average of the adjacent thickness or 0.13 inch maximum. If at all possible, the doubler should be symmetric to the web. Tests of single sided doublers to failure indicate a nonlinear rise in stress as the added material attempts to align with the web. If the doubler thickness is much greater than the basic web thickness, it should be stepped in increments to reduce the stress concentration effects as well as any sharp changes in eccentricity. This effect is also lessened with the symmetric doubler.

[5] Polynomial curve fit equation for this curve is: $K_4 = 0.968416 + 0.870406(D/h) - 2.55893(D/h)^2 - 100.188537(D/h)^3 + 1117.648961(D/h)^4 - 4576.588092(D/h)^5 + 9556.688614(D/h)^6 - 10935.62478(D/h)^7 + 6548.948132(D/h)^8 - 1609.340073(D/h)^9$ valid for $0.050 < D/h < 0.500$. For $D/h <= 0.050$ $K_4 = 1.0$.

Copyright 2016 Lockheed Martin Corporation.
Note: The current version is always the version on the Lockheed Martin network

Mechanically fastened doublers also benefit from being symmetric, particularly if the doubler is significantly thicker than the web. Rather than stepping the individual mechanically fastened doublers, consideration should be given to ending them at different fastener rows, thus reducing the concentrated reduction in thickness.

As with the other methods, there are limitations on applicability based on the range of test data available. These are listed in Table 6.7.4-2. The geometry of a typical ring doubler is shown in Figure 6.7.4-3. If the parameters of a specific design fall outside of those listed in the table, then options open to the analyst might include addition of stiffeners, choice of a different means of reinforcement, use of a detailed finite element model or performing full scale static testing.

In addition the hole should be located within *h/8* from the beam neutral axis to preclude shear/tension or shear/compression interaction. If it is necessary to place the hole greater than *h/8* from the beam neutral axis, it may be necessary to use a finite element based analysis to ensure all failure modes are accounted for.

Table 6.7.4-2 Parameter Limitations for Holes in Shear Resistant or Tension Field Beams

$0.35 \le W/D \le 0.50$
$D/h \le 0.50$
$D/b_s \le 0.67$
where W = the width of the ring doubler (in) D = web hole diameter (in) b_s = web stiffener spacing (in) h = the height of the web: cap centroid to cap centroid for integral caps; fastener centerline to fastener centerline for mechanically attached caps.

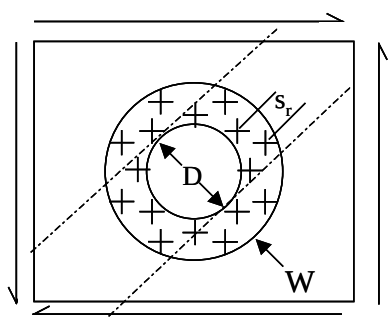

Figure 6.7.4-3 Ring Doubler Geometry Definition

There are two modes of failure which must be considered with ring doublers: a shear failure of the web and a tension failure in the doubler. The shear failure check allows the analyst to size the thickness of the doubler such that the shear capability of the web is not reduced from a web with no penetrations. The tension check ensures the doubler can carry the shear load in tension around the hole. The thickness of the doubler should be the maximum of these two calculations. Note that for this type of analysis, there is no actual margin of safety calculated. What is calculated is the thickness of the ring required for a zero margin at ultimate stress.

To determine the thickness of the ring to satisfy the shear failure check, the analyst must first calculate F_s for the bay as if the bay had no penetration. If the web is shear resistant $F_s = F_{scr}$ using methods described in Section 10.3. If the web is in diagonal tension, then $F_s = F_{all}^*$ from Section 6.6.3.1.3.

The proposed width of the ring doubler is also required. This can either be determined by assuming a *W/D* ratio which falls within the parameters listed in Table 6.7.4-2 and, knowing the hole diameter, calculating *W* or by determining the required width to satisfy the minimum fastener spacing and edge distances to obtain a staggered

Copyright 2016 Lockheed Martin Corporation.
Note: The current version is always the version on the Lockheed Martin network

double row of fasteners in the doubler. Remember to check that this satisfies the *W/D* parameter requirements. Additionally, it is assumed that the doubler is of the same material as the web. It can have a higher ultimate tensile strength, but under no circumstances should it be weaker than the beam web material.

Enter Figure 6.7.4-4 with *W/D* and the material and determine v = $(F_{tu}/F_s)(A_{ring}/A_{hole})$. The cross-sectional area of the removed material due to the hole can be calculated as

$$A_{hole}=Dt \qquad \textbf{Equation 6.7.4-4}$$

where
t is the web thickness
D is the diameter of the web penetration (in)

The cross-sectional area of the ring doubler is given by

$$A_{ring}=2Wt_{ring} \qquad \textbf{Equation 6.7.4-5}$$

where
t_{ring} is the ring thickness (in)
W is the width of the ring (in)

Since the value of t_{ring} may be unknown, the ring thickness necessary to satisfy the shear failure criteria can be calculated from $v = (F_{tu}/F_s)(A_{ring}/A_{hole})$, F_{tu}, F_s, A_{hole}, and W, the width of the ring by the following equation.

$$t_{ring-shear} = \frac{vA_{hole}}{2W}\left(\frac{F_s}{F_{tu}}\right) \qquad \textbf{Equation 6.7.4-6}$$

where
v is the value of $(F_{tu}/F_s)(A_{ring}/A_{hole})$ from Figure 6.7.4-4
F_s is F_{scr}, the initial buckling stress for the web with no hole (shear resistant) (psi)
F_s is F_{all} from Equation 6.6.3-11 for the web with no holes (diagonal tension) (psi).
A_{hole} = the cross-sectional area of the hole from Equation 6.7.4-4
W is the width of the ring (in)
F_{tu} is the ultimate strength of the doubler material (psi)

Copyright 2016 Lockheed Martin Corporation.
Note: The current version is always the version on the Lockheed Martin network

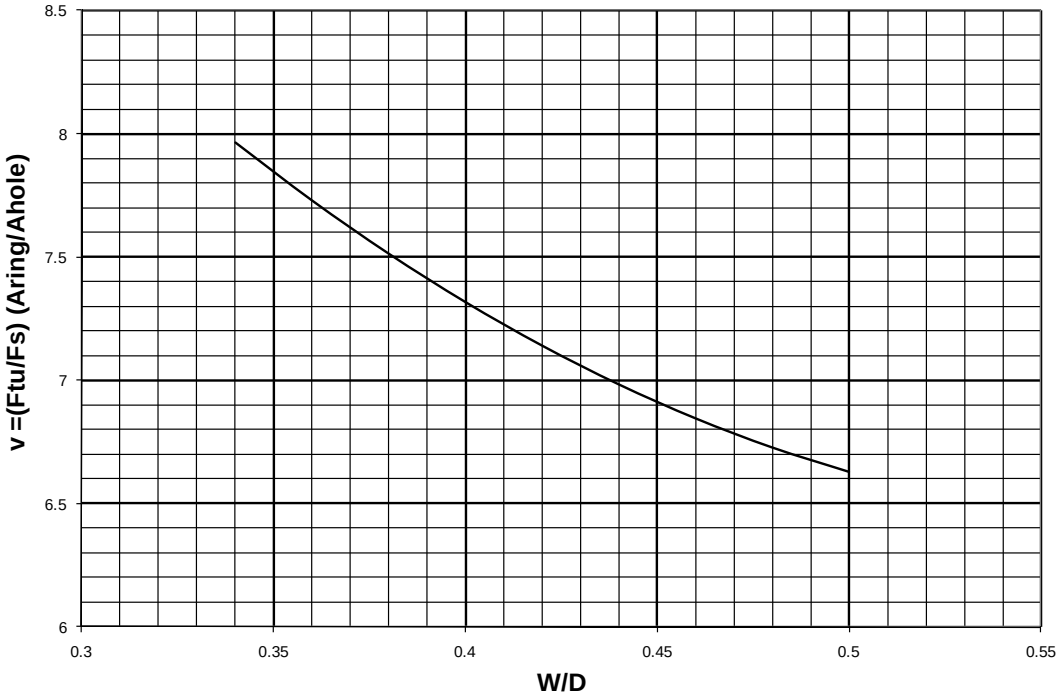

Figure 6.7.4-4 Ring Doubler Design Data[6]

The required thickness of the ring to satisfy the tension requirement is given by

$$t_{ring-tension} = (t)\left(\frac{F_s}{F_{tu}}\right)\left[0.75\left(\frac{D}{W}\right)^2 + 1.75\left(\frac{D}{W}\right)\right] \qquad \textbf{Equation 6.7.4-7}$$

where
F_s is F_{scr}, the initial buckling stress for the web with no hole (shear resistant) (psi)
F_s is F_{all} from Equation 6.6.3-11 for the web with no holes (diagonal tension) (psi).
t is the web thickness (in)
D is the diameter of the hole (in)
W is the width of the ring (in)
F_{tu} is the ultimate strength of the doubler material (psi)

This calculation is based on a combined bending / tension interaction in the ring. Depending on the geometry of a particular web/hole/ring combination, one or the other of these calculations will dominate. The required ring doubler thickness, t_{ring}, is the maximum of Equation 6.7.4-6 or Equation 6.7.4-7. Thus, to calculate the margin of safety for the ring doubler,

$$M.S.\ (ring) = t_{ring\text{-}actual} / t_{ring} - 1 \qquad \textbf{Equation 6.7.4-8}$$

where
$t_{ring\text{-}actual}$ is the actual thickness of the ring doubler (in)
t_{ring} is the required thickness of the ring doubler (in); maximum ($t_{ring\text{-}shear}$, $t_{ring\text{-}tension}$)

[6] Polynomial curve fit equation for this figure is: v = 14.95133-28.8397(W/D)+24.39483(W/D)^2. This is valid for W/D over range shown in Figure 6.7.4-4. Extrapolation can lead to erroneous results.

Copyright 2016 Lockheed Martin Corporation.
Note: The current version is always the version on the Lockheed Martin network

In addition to these calculations, if this is a mechanically fastened doubler, there are minimum fastener strength requirements. The fasteners should be sized for the running load developed by the fasteners located in a zone formed by tangent lines on either side of the hole as shown in Figure 6.7.4-3. This assumes the fasteners are located in a uniform pattern as shown and can develop the full capability of the web. Two rows are required to make the doubler act with the web.

$$q_{fas} = 2F_s t \qquad \textbf{Equation 6.7.4-9}$$

where
q_{fas} is the running load to be developed by the fastener pattern(lb/in)
F_s is F_{scr}, the initial buckling stress for the web with no hole (shear resistant) (psi)
F_s is F_{all} from Equation 6.6.3-11 for the web with no holes if (diagonal tension) (psi)
t is the web thickness (in)

The per fastener load would be

$$P_{fas} = q_{fas} \bullet s_r \qquad \textbf{Equation 6.7.4-10}$$

where
q_{fas} is the running load to be developed by the fastener pattern(lb/in)
s_r is the fastener spacing in the doubler (in)

The allowable joint load (P_{allow}) can be obtained from SM65, Reference 6-1, or References 6-4 or 6-5. These allowables are based on test data for the fastener and joint material combination. At larger joint thickness it will be the equivalent of the fastener shear capability. At intermediate thickness, it is a function of the ability of the joint material to support the fastener and the values represent a transition region between bearing dominated and fastener shear dominated. The margin of safety for the ring doubler to beam web fasteners can then be written as

$$M.S.(joint) = P_{allow} / P_{fas} - 1 \qquad \textbf{Equation 6.7.4-11}$$

where
P_{allow} is the allowable fastener shear load (lbs)
P_{fas} is the applied fastener load (lbs) from Equation 6.7.4-10.

Although a fitting factor is not shown in this equation, the analyst should always refer to program specific guidance on the magnitude and applicability of the use of a fitting factor. Refer to Section 5.2.3 for further discussion of fitting factors.

6.7.5 UNIX/PC Based Analysis Tools/Guidance

An EXCEL spreadsheet computational aid has been developed for the analysis methods developed in Section 6.7. A link is provided in Reference 6-42. CAT TOOLS/POPPI is also a program useful in calculating the buckling eigenvalue of a panel with a hole.

6.7.6 Analysis Examples of Holes in Webs

In this section some examples of web penetration calculations will be given to illustrate the methodology.

Section	Example Type	Discussion
6.7.6.1	Calculation of F_{scr} for Web with Hole	
6.7.6.2	Flanged Holes in Unstiffened Webs	Shear Resistant
6.7.6.3	Flanged Holes in Stiffened Webs	Shear Resistant
6.7.6.4	Unreinforced Circular Holes in Stiffened Beams	Diagonal Tension
6.7.6.5	Circular Holes with Doublers in Webs	Shear Resistant or Diagonal Tension

Copyright 2016 Lockheed Martin Corporation.
Note: The current version is always the version on the Lockheed Martin network

6.7.6.1 Example of Calculation of F_{scr} for Web with Hole

Material
7075-T6 Aluminum Sheet Bare
F_{tu} = 80000 psi F_{su} = 48000 psi

Calculate F_{scr}:
b/a = 8/12 = 0.67
k_s=7.1 Figure 10.3.2-7, Simply Supported
$K=\frac{k_s\pi^2}{12(1-\nu_e^2)}=\frac{7.1\cdot\pi^2}{12(1-0.33^2)}=6.55$
$\sqrt{K}$ = 2.56 Section 10.3.1
$(b/t)_e = b/(t\sqrt{K}) = 8/(.080\bullet 2.56)$
$(b/t)_e$ = 39.06
F_{scr} = 6750 psi Section 10, Figure 10.3.1-10, Curve 5

Calculate Applied Shear Stress:
f_s = q/t = 500/0.08 = 6250 psi.

Sketch

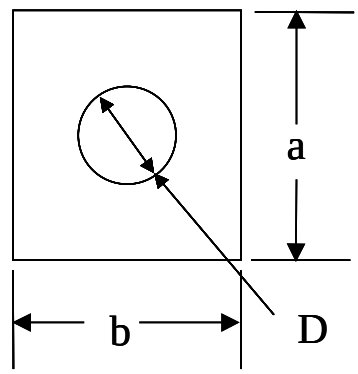

For shear buckling A is always the long side

a = 12 in b = 8 in D = 4 in t=0.08 in

Solution Step	Calculation	Result
Calculate D/b	D/b = 4/8 = 0.50	D/b = 0.50
Calculate K_{hole}	$K_{hole} = (1-D/b)^{(5/3)} = (0.5)^{(5/3)}$	K_{hole} = 0.3149
Determine $F_{scr\text{-}hole}$	$F_{scr\text{-}hole} = F_{scr}K_{hole}$ = (6750)(0.3149)	$F_{scr\text{-}hole}$ = 2126 psi
Alternate Solution – Interpolate from b/a curve		
Calculate b/a	b/a = 8/12	b/a=0.666
Determine K_{hole} from Figure 6.7.2-1		K_{hole} = 0.4
Determine $F_{scr\text{-}hole}$	$F_{scr\text{-}hole} = F_{scr}K_{hole}$ = (6750)(0.40)	$F_{scr\text{-}hole}$ = 2700 psi

From this example, it can be seen that the addition of such a large hole has forced the web to buckle under the applied stress (6250 psi applied > 2126 psi allowed) If it is required that the web remain shear resistant, one option would be to thicken the entire web by working backwards using the applied shear stress for $F_{scr\text{-}hole}$:
Using the initial design curve:
$F_{scr\text{-}hole}$ (needed) = 6250/0.3149 = 19848 psi
From Figure 10.3.1-10, to have F_{scr} = 19848, $(b/t)_e$ = 23
Solving $(b/t)_e$ = 23 = $b/(t\sqrt{K})$ for t
t_{min} = 8/(23•2.56) = 0.136 in
Interpolating from the b/a curves for K_{hole}
$F_{scr\text{-}hole}$ (needed) = 6250/0.40 = 15625 psi
From Figure 10.3.1-10, to have F_{scr} = 15625, $(b/t)_e$ = 25.5
Solving $(b/t)_e$ = 25.5 = $b/(t\sqrt{K})$ for t
t_{min} = 8/(25.5•2.56) = 0.123 in
This would be the minimum web thickness required for the web to remain unbuckled at the applied shear of 500 lb/in with a 4 in diameter hole.

Copyright 2016 Lockheed Martin Corporation.
Note: The current version is always the version on the Lockheed Martin network

6.7.6.2 Example of Margin of Safety Calculations for Flanged Holes in Unstiffened Shear Resistant Webs

Material	**Sketch**
7075-T6 Aluminum Sheet Bare F_{tu} = 80000 psi F_{su} = 48000 psi F_{scr} = 2200 psi Section 10 $f_s = q/t$ = 2125 psi $f_s \leq F_{scr}$? - if yes proceed with analysis. *Holes are flanged with 45 degree flange. See PM-4057, Figure 6.7.3-1 for minimum flange length.*	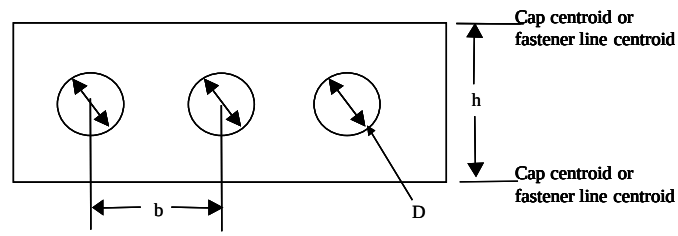 b = 8 in h = 12 in D = 4 in d (fastener dia) = 0.188 in t= 0.080 in s (cap/web fastener spacing) = 0.95 in

Check Parameter Limitations	
$0.25 \leq D/h \leq 0.75$	D/h = 4/12 = 0.33333
$40 \leq h/t \leq 250$	h/t = 12/0.08 = 150
$0.30 \leq D/b \leq 0.70$	D/b =4/8 = 0.50
$0.016 \leq t \leq 0.125$	t = 0.08

Solution Step	**Calculation**	**Result**
	Gross Area Collapse	
Determine $K_{collapse}$ (Equation shown or PM-4057, Figure 6.7.3-2)	$K_{collapse} = 1.0770642 - 0.015502(h/t) + 0.000108721(h/t)^2 - 3.63411\text{x}10^{-7}(h/t)^3 + 4.68180\text{x}10^{-10}(h/t)^4$	$K_{collapse}$ = 0.2085
Determine K_1 (PM-4057, Figure 6.7.3-3)		K_1 = 0.716
Calculate F_s	$F_s = F_{su}K_{collapse}K_1$ = 48000(0.2085)(0.716)	F_s = 7166 psi
Calculate M.S. (gross area-collapse)	M.S. = $F_s / f_s - 1$ = 7166 / 2125 – 1	**M.S.(collapse)= <u>2.37 ULT</u>**[7]
	Net Section	
Calculate $f_{s\text{-net-horizontal}}$	$f_{s-net-horizontal} = \frac{q}{t}\left[\frac{b}{b-D}\right] = \frac{170}{0.08}\left[\frac{8}{8-4}\right]$	$f_{s\text{-net-horizontal}}$ = 4250 psi
Calculate $f_{s\text{-net-vertical}}$	$f_{s-net-vertical} = \frac{q}{t}\left[\frac{h}{h-D}\right] = \frac{170}{0.08}\left[\frac{12}{12-4}\right]$	$f_{s\text{-net-vertical}}$ = 3188 psi
Calculate $f_{s\text{-net-fastener}}$	$f_{s-net-fastener} = \frac{q}{t}\left[\frac{s}{s-D}\right] = \frac{170}{0.08}\left[\frac{0.95}{0.95-0.188}\right]$	$f_{s\text{-net-fastener}}$ = 2649 psi
Determine $f_{s\text{-net}}$	Maximum of ($f_{s\text{-net-horizontal}}$, $f_{s\text{-net-vertical}}$, $f_{s\text{-net-fastener}}$)	$f_{s\text{-net}}$ = 4250 psi
Calculate M.S. (net section)	M.S. = $F_{su} / f_{s\text{-net}} - 1$ = 48000/4250 - 1	**M.S.(net section) = <u>+High ULT</u>**

[7] Note that this margin predicts the ultimate collapse of the web accounting for the hole, it does not make any comment on the buckled state of the web.

Copyright 2016 Lockheed Martin Corporation.
Note: The current version is always the version on the Lockheed Martin network

Web / Cap Joint Check		
Calculate q_r	q_r = Maximum [1.25q or 0.67q(b/(b-D))] = Max [1.25(170) or 0.67(170)(8/4)]	q_r =228 lb/in
Calculate P_r	$P_r = q_r s = 228(0.95)$	P_r = 217 lbs
Determine P_{allow} SMM 65d or Mil Handbook 5	XBE6 in 0.080 Sheet	P_{allow} = 1158 lb
Calculate M.S. (joint)	M.S. = P_{allow} / P_r – 1 = 1158/217 –1	**M.S.(joint) = <u>+High ULT</u>**

Although the example in this problem yields high margins of safety for ultimate rupture, the criteria that the web be shear resistant prior to the addition of the flanged holes must be satisfied, resulting in fairly low applied stresses. Note that no fitting factor was used in calculating the fastener margins. Refer to program direction on the use of fitting factors.

6.7.6.3 Example of Margin of Safety Calculations for Flanged Holes in Stiffened Shear Resistant Webs

Material	**Sketch**
7075-T6 Aluminum Sheet Bare F_{tu} = 80000 psi F_{su} = 48000 psi F_{scr} = 6750 psi Section 6.7.6.1 Example Problem $f_s = q/t = 500/0.08 = 6250$ psi $f_s \le F_{scr}$? - if yes proceed with analysis. A_{st}= .232 in^2 I_{st}= 0.01951 in^4 *Holes are flanged with 45 degree flange. See PM-4057, Figure 6.7.3-1 for minimum flange length*	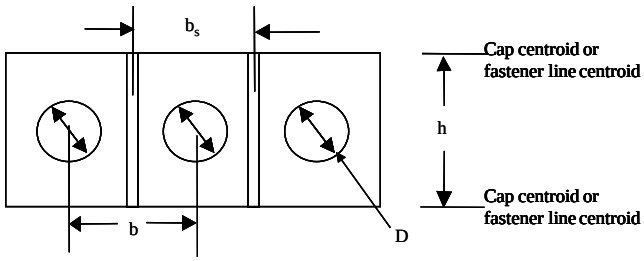 b_s = 8 in b= 8 in h = 12 in D = 4 in d (fastener dia) = 0.188 t= 0.080 in s (cap/web fastener spacing) = 0.80 in

Check Parameter Limitations	
$D/h \le 0.50$	D/h = 4/12 = 0.33333
$115 \le h/t \le 1500$	h/t = 12/0.080 = 150
$0.235 \le b_s/h \le 1.0$	b_s/h =8/12 = 0.66666
$0.025 \le t \le 0.125$	t = 0.080
$D/b_s \le 0.85-0.1(h/b_s)$ 0.85-0.1(12/8) = 0.7	D/b_s = 0.5<=0.7 ok. (Net Section Check)
$A_{st} \ge [0.385-0.08(b_s/h)^3](b_s t)$	$[0.385-0.08(b_s/h)^3](b_s t)$ = 0.231 (req'd)
$I_{st} \ge [F_s t b_s h^3]/[12E(h-D)]$ $F_s = F_{scr}$=6750 for Shear Resistant Web	$[F_s t b_s h^3]/[10^8 (h-D)] = 6750(0.08)(8)(12)^3/[12(10.4x10^6)(12-4)]$ = 0.01053 in^4 (req'd)

Solution Step	Calculation	Result
Gross Area Collapse		
Determine $K_{collapse}$ (Equation shown or PM-4057, Figure 6.7.3-2)	b_s/t = 8/0.08 = 100 $K_{collapse} = 1.0770642-0.015502(100) + 0.000108721(100)^2 - 3.63411x10^{-7}(100)^3 + 4.68180x10^{-10}(100)^4 =$	$K_{collapse}$ = 0.297
Determine K_2	b_s/t = 100; D/h = 0.333	K_2 = 0.96

Copyright 2016 Lockheed Martin Corporation.
Note: The current version is always the version on the Lockheed Martin network

(PM-4057, Figure 6.7.3-5)		
Calculate F_s	$F_s = F_{su}K_{collapse}K_2 = 48000(0.297)(0.96)$	F_s = 13686 psi
Calculate M.S. (gross area-collapse)	M.S. = $F_s / f_s - 1$ = 13686/6250 –1	**M.S.(collapse)= <u>1.19 ULT</u>**
Web / Beam Cap Joint Check		
Calculate q_r	$q_r = 1.25F_s t\left[\frac{h}{h-D}\right] = 1.25(13686)(0.08)\left[\frac{12}{12-4}\right]$	q_r = 2053 lbs/in
Calculate P_r	$P_r = q_r s$ = 2053(0.80)	P_r = 1642 lbs
Determine P_{allow} SMM 65d or Mil Handbook 5	3/16 in dia : HLT114	P_{allow} = 1814 lbs
Calculate M.S. (joint)	M.S. = $P_{allow} / P_r - 1$ = 1814/1642 – 1	**M.S.(joint-web/cap) = <u>0.10 ULT</u>**
Stiffener / Beam Cap Joint Check		
Calculate P_{end}	$P_{end} = 0.0024A_{st}F_s\frac{b_s}{t}\left[\frac{h}{h-D}\right] = 0.0024(0.232)(13686)\left(\frac{8}{0.08}\right)\left[\frac{12}{12-4}\right.$	P_{end} = 1143 lbs
Calculate P_{st}	$P_{st} = P_{end} / n_{eff}$ = 1143/2	P_{st} = 572 lbs
Calculate P_{fas}	$P_{fas} = \sqrt{P_{st}^2 + P_r^2} = \sqrt{1642^2 + 572^2}$	P_{fas}= 1739 lbs
Determine P_{allow} SMM 65d or Mil Handbook 5	3/16 in dia : HLT114	P_{allow} = 1814 lbs
Calculate M.S. (joint)	M.S. = $P_{allow} / P_{fas} - 1$ = 1814/1739-1	**M.S.(joint-stiffener/cap) = <u>0.04 ULT</u>**
Required fastener tension capability		
Calculate $P_{tension\text{-}applied}$	$P_u = 0.20tF_{tu} = 0.20(0.08)(80000)$	$P_{tension\text{-}applied}$ = 1280 lbs
Determine $P_{all,t}$= Minimum($P_{tension}$, P_{pt})	3/16 in dia : HLT114 $P_{tension}$ = 2250 lbs $P_{pt}=F_{su}t\pi d_{head}$=48000(0.080)π(0.305)= 3679 lbs	$P_{all,t}$=2250 lbs
Calculate M.S. (fastener tension)	M.S. = $P_{all,t} / P_{tension\text{-}applied} - 1$ = 2250/1280 - 1	**M.S.(fastener tension) = <u>0.76 ULT</u>**

The problem was selected to be identical in geometry as that of Example 6.7.5.2 except this beam has stiffeners located every 8 inches. Note that the presence of the stiffeners triples the buckling stress, allowing the beam to be more heavily loaded. The stiffeners also improve the collapse strength by about 30%. Due to the higher loads and to eliminate a negative margin, the fasteners in Example 6.7.5.2 were replaced with a higher strength fastener. Note that no fitting factor was used in calculating the fastener margins. Refer to program direction on the use of fitting factors.

Copyright 2016 Lockheed Martin Corporation.
Note: The current version is always the version on the Lockheed Martin network

6.7.6.4 Example of Worksheet Calculations for Unreinforced Holes in Stiffened Diagonal Tension Beams

Material	**Sketch**
7075-T6 Aluminum Sheet Bare F_{tu} = 80000 psi F_{su} = 48000 psi From diagonal tension analysis (Section 6.6): F_{all}^* =F_{all}^* psi $F_{o,e}$ = $F_{o,e}$ psi q_t = q_t lb/in $A_{u,e}$= 0.163 in^2 *Holes are unreinforced. Web is in Diagonal Tension*	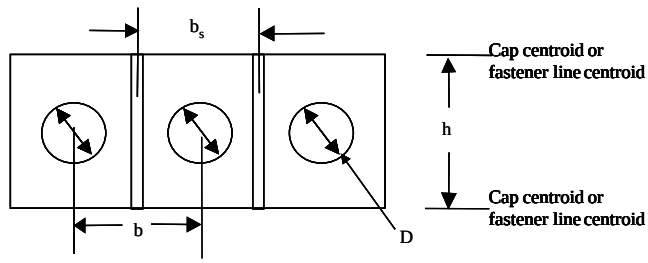 b_s = 8 in b= 8 in h = 12 in D = 3 in d (fastener dia) = 0.188 t_u = 0.070 in t= 0.080 in s (cap/web fastener spacing) = 0.95 in

Check Parameter Limitations	
D ≤ 3.0 in	D = 3.0
D/h ≤ 0.50	D/h = 3/12 = 0.25
7.4 ≤ h ≤ 19.4	h = 12
7 ≤ b_s ≤ 18	b_s = 8
0.020 ≤ t ≤ 0.132	t = 0.080
0.040 ≤ t_{st} ≤ 0.079	t_{st} = 0.070

Solution Step	**Calculation**	**Result**
	Allowable Diagonal Tension Shear Stress	
Determine K_3 (Equation shown or PM-4057, Figure 6.7.4-1)	[t_{st} / t] / [b_s/h] = (0.07/0.08)/(8/12) = 1.31	K_3 = 0.374
Determine K_4 (PM-4057, Figure 6.7.4-2)		K_4 =1.117
Calculate F_s	$F_s = F_{all}^*\left[\frac{tb_s(b_s-D)+A_uDK_3}{K_4tb_s^2}\right] = F_{all}^*\left[\frac{0.080(8)(8-3)+0.163(3)(0.375)}{(1.12)(0.08)(8)^2}\right]$	F_s = 0.592(F_{all}^*)
	Forced Crippling Allowable Stress	
Calculate $\sigma_{o\text{-hole}}$	$F_{o\text{-hole}}$ = $F_{o,e}$ / (1 + D/b_s) = $F_{o,e}$ / (1+3/8)	$F_{o\text{-hole}}$ = 0.73($F_{o,e}$)
	Fastener Applied Tensile Load	
Calculate $q_{t\text{-hole}}$	$q_{t\text{-hole}}$ = q_t(1 + D/b_s) = q_t(1+3/8)	$q_{t\text{-hole}}$ = 1.375(q_t)
Use these modified allowable stresses and applied running load and complete diagonal tension analysis per Section 6.7		

Copyright 2016 Lockheed Martin Corporation.
Note: The current version is always the version on the Lockheed Martin network

6.7.6.5 Example of Margin of Safety Calculations for Circular Holes with Doublers in Shear Resistant or Diagonal Tension Webs

Material
7075-T6 Aluminum Sheet Bare
F_{tu} = 80000 psi F_{su} = 48000 psi

If shear resistant:
$F_s = F_{scr}$ = 6750 psi Section 6.7.6.1 Example Problem
f_s = q/t = 500/0.08 = 6250 psi

If buckled: ***(Not applicable, example is shear resistant)***
From diagonal tension analysis (Section 6.6): $F_s = F_{all}^*$ = 6750 psi

A_{st}= .232 in^2
I_{st}= 0.01951 in^4
Holes have mechanically attached ring doubler.

Sketch
b_s = 8 in b= 8 in h = 12 in D = 4 in $t_{ring\text{-}actual}$ = to be calculated
d (fastener dia) = 0.156 s_r = 0.70 t= 0.080 in

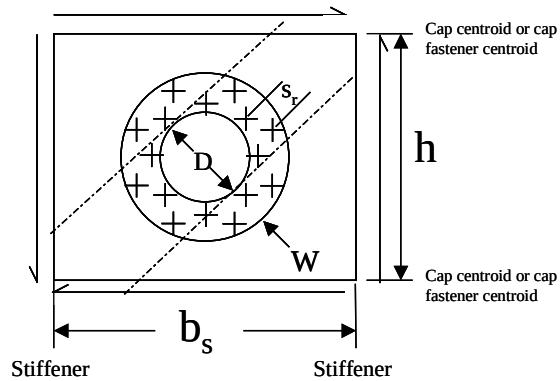

Check Parameter Limitations	
$0.35 \le W/D \le 0.50$ in	W/D = 0.35 therefore W=.35(4) = 1.4 in
$D/h \le 0.50$	D/h = 4/12 = 0.33
$D/b_s \le 0.67$	D/b_s = 4/8 = 0.50

Solution Step	Calculation	Result
Determine ν	$v=(F_{tu}/F_s)(A_{ring}/A_{hole})$ (PM-4057, Figure 6.7.4-4)	v = 7.85
Calculate A_{hole}	A_{hole} = Dt = 4(0.080)	A_{hole} = 0.32
Calculate t_{ring} (shear check)	$t_{ring-shear} = \frac{vA_{hole}}{2W}\left(\frac{F_s}{F_{tu}}\right) = \frac{7.85(0.32)}{2(1.40)}\left(\frac{6750}{80000}\right)$	$t_{ring\text{-}shear}$ = 0.076 in
Calculate t_{ring} (tension check)	$t_{ring-tension} = (t)\left(\frac{F_s}{F_{tu}}\right)\left[0.75\left(\frac{D}{W}\right)^2 + 1.75\left(\frac{D}{W}\right)\right]$ $t_{ring-tension} = (0.08)\left(\frac{6750}{80000}\right)\left[0.75\left(\frac{4}{1.4}\right)^2 + 1.75\left(\frac{4}{1.4}\right)\right]$	$t_{ring\text{-}tension}$ = 0.075 in
Determine t_{ring}	t_{ring} = Maximum [$t_{ring\text{-}shear}$, $t_{ring\text{-}tension}$]	t_{ring} = 0.076
Margin of Safety (ring)	M.S. (ring) = $t_{ring\text{-}actual}$ / t_{ring} – 1 = 0.076/0.076-1	M.S.(ring) = 0.0 ULT
Ring Joint Check		
Calculate q_{fas}	$q_{fas} = 2F_s t$ = 2(6750)(0.080)	q_{fas} = 1080 lbs/in
Calculate P_{fas}	$P_{fas} = q_{fas} s_r$ = 1080(0.70)	P_{fas} = 756 lbs
Determine P_{allow} SMM 65d	(XBE5 in 0.071 sheet)	P_{allow} = 808 lbs
Calculate M.S. (joint)	M.S. = P_{allow} / P_r – 1 = 808/756-1	**M.S.(joint-web/ring) = 0.07 ULT**

Note that no fitting factor was used in calculating the fastener margins. Refer to program direction on the use of fitting factors.

Copyright 2016 Lockheed Martin Corporation.
Note: The current version is always the version on the Lockheed Martin network