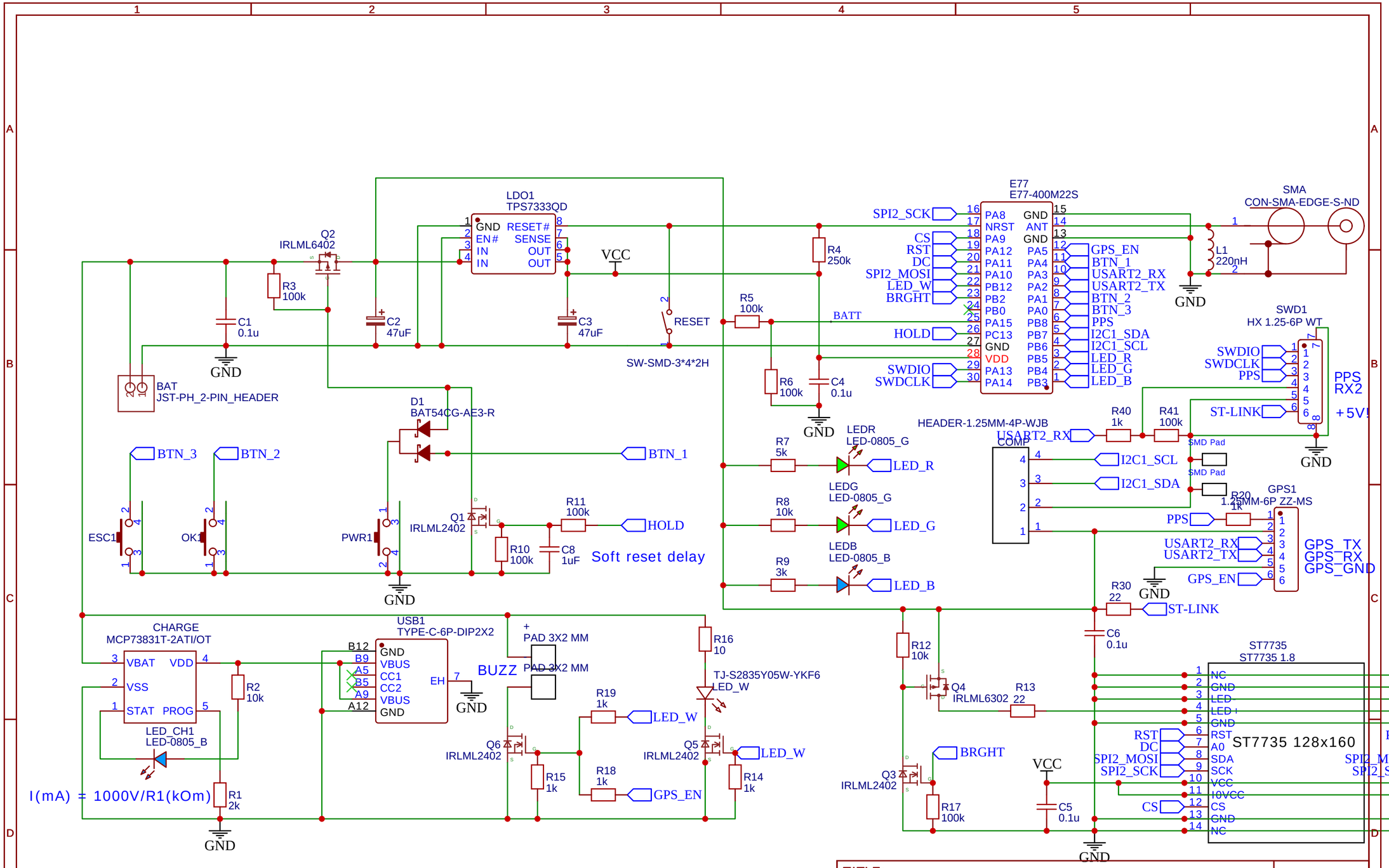

TITLE: Sheet_1	REV: 1.0
Company: Your Company	Sheet: 1/1
Date: 2024-03-06 Drawn By: klementjev	

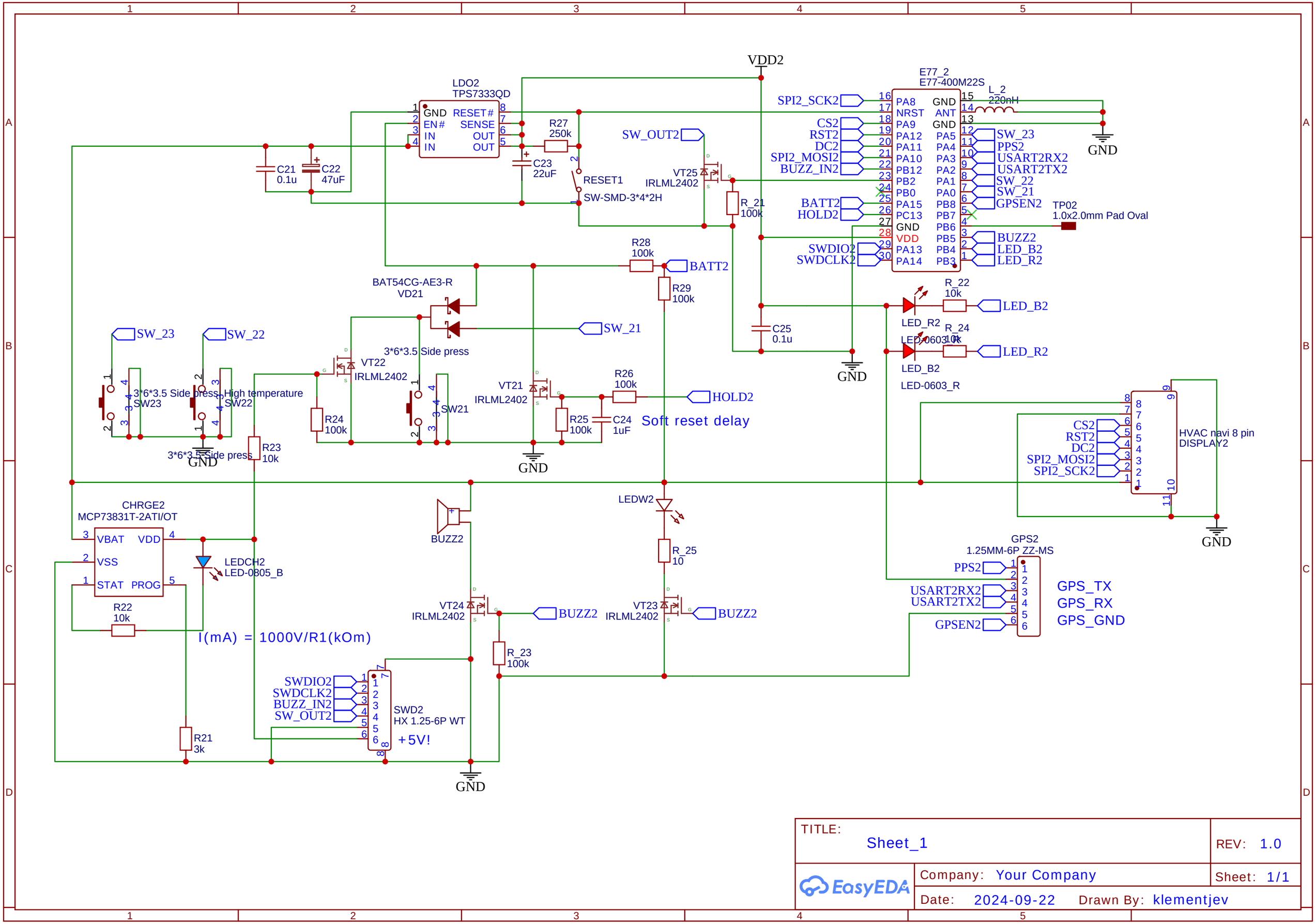

TITLE: Sheet_1	REV: 1.0
EasyEDA	Company: Your Company
	Sheet: 1/1
	Date: 2024-09-22 Drawn By: klementjev

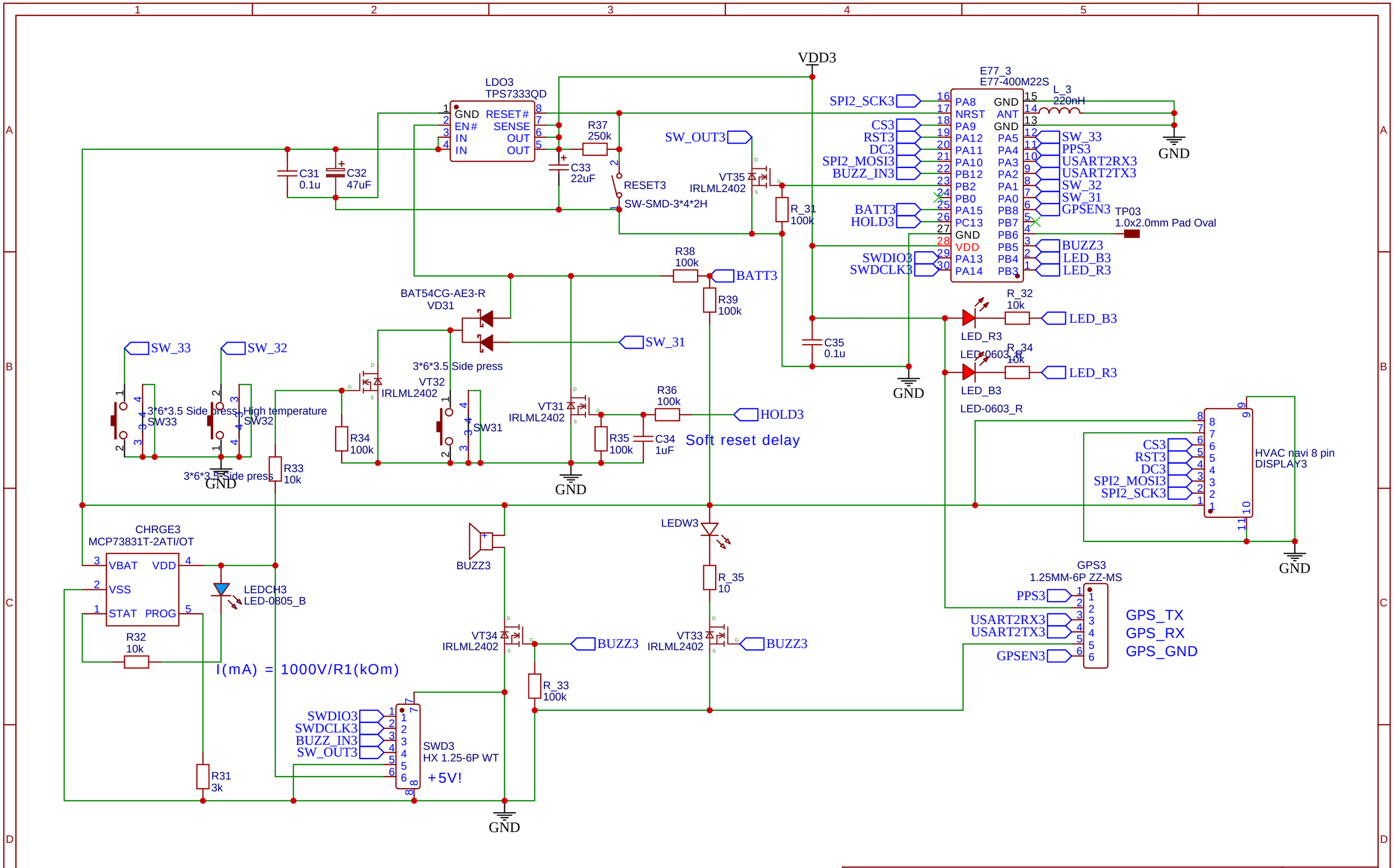

TITLE: Sheet_1	REV: 1.0
EasyEDA	Company: Your Company
	Sheet: 1/1
	Date: 2024-09-24 Drawn By: klementjev