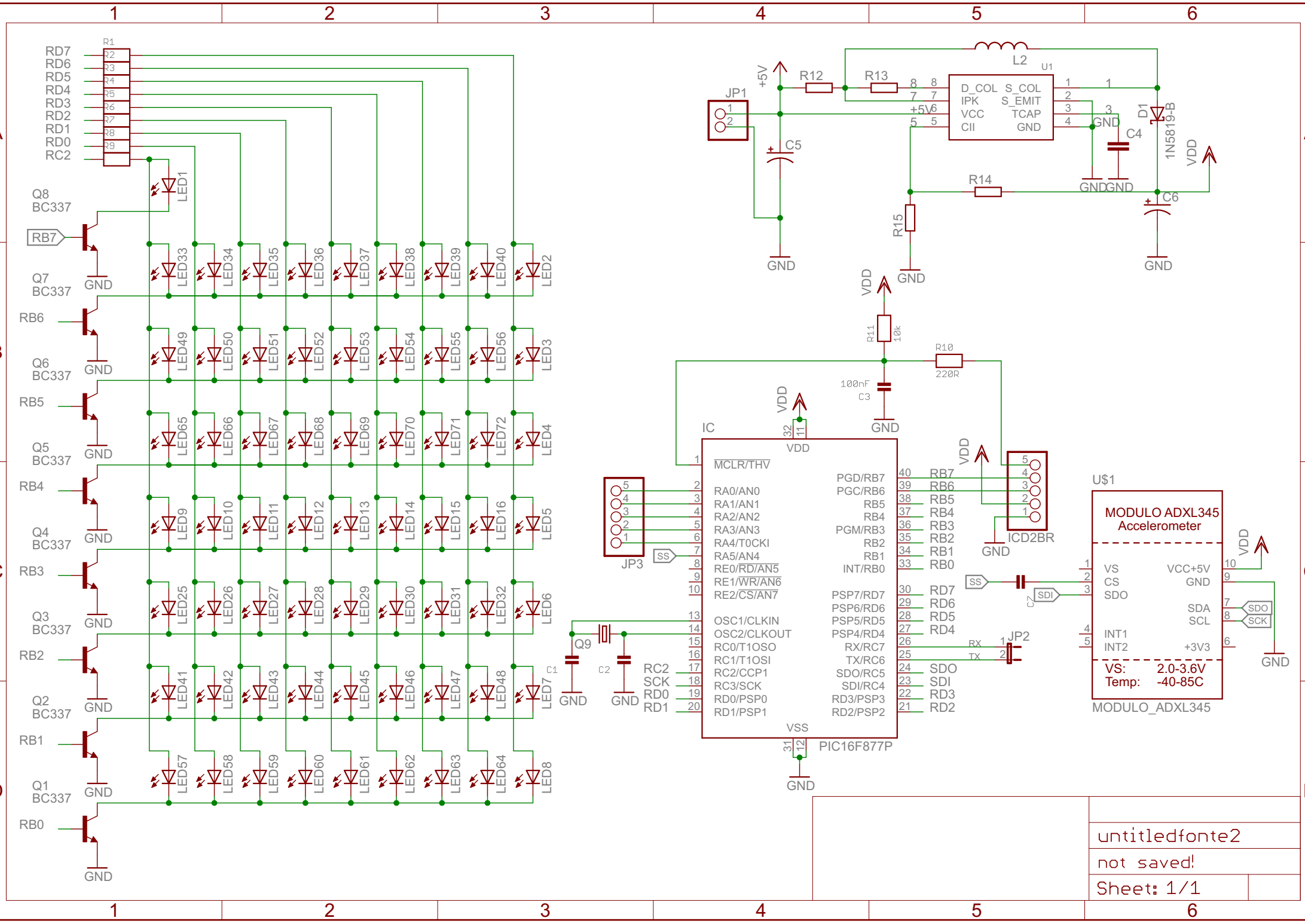
R1
RD7
RD6
RD5
RD4
RD3
RD2
RD1
RD0
RC2
Q8 BC337
Q7 BC337
Q6 BC337
Q5 BC337
Q4 BC337
Q3 BC337
Q2 BC337
Q1 BC337
RB7
RB6
RB5
RB4
RB3
RB2
RB1
RB0
GND
LED1
LED2
LED3
LED4
LED5
LED6
LED7
LED8
LED9
LED10
LED11
LED12
LED13
LED14
LED15
LED16
LED25
LED26
LED27
LED28
LED29
LED30
LED31
LED32
LED33
LED34
LED35
LED36
LED37
LED38
LED39
LED40
LED41
LED42
LED43
LED44
LED45
LED46
LED47
LED48
LED49
LED50
LED51
LED52
LED53
LED54
LED55
LED56
LED57
LED58
LED59
LED60
LED61
LED62
LED63
LED64
JP1
+5V
R12
R13
L2
U1
D_COL
S_COL
IPK
S_EMIT
VCC
TCAP
CII
GND
C4
D1
1N5819-B
VDD
C5
R14
C6
R15
R11
10k
R10
220R
100nF
C3
IC
MCLR/THV
RA0/AN0
RA1/AN1
RA2/AN2
RA3/AN3
RA4/T0CKI
RA5/AN4
RE0/RD/AN5
RE1/WR/AN6
RE2/CS/AN7
OSC1/CLKIN
OSC2/CLKOUT
RC0/T1OSO
RC1/T1OSI
RC2/CCP1
RC3/SCK
RD0/PSP0
RD1/PSP1
PGD/RB7
PGC/RB6
RB5
RB4
PGM/RB3
RB2
RB1
INT/RB0
PSP7/RD7
PSP6/RD6
PSP5/RD5
PSP4/RD4
RX/RC7
TX/RC6
SDO/RC5
SDI/RC4
RD3/PSP3
RD2/PSP2
VSS
PIC16F877P
JP3
SS
Q9
C2
C1
RC2
SCK
RD0
RD1
ICD2BR
JP2
RX
TX
SDI
SDO
U$1
MODULO ADXL345
Accelerometer
VS
CS
SDO
VCC+5V
GND
SDA
SCL
INT1
INT2
+3V3
VS: 2.0-3.6V
Temp: -40-85C
MODULO_ADXL345
untitledfonte2
not saved!
Sheet: 1/1