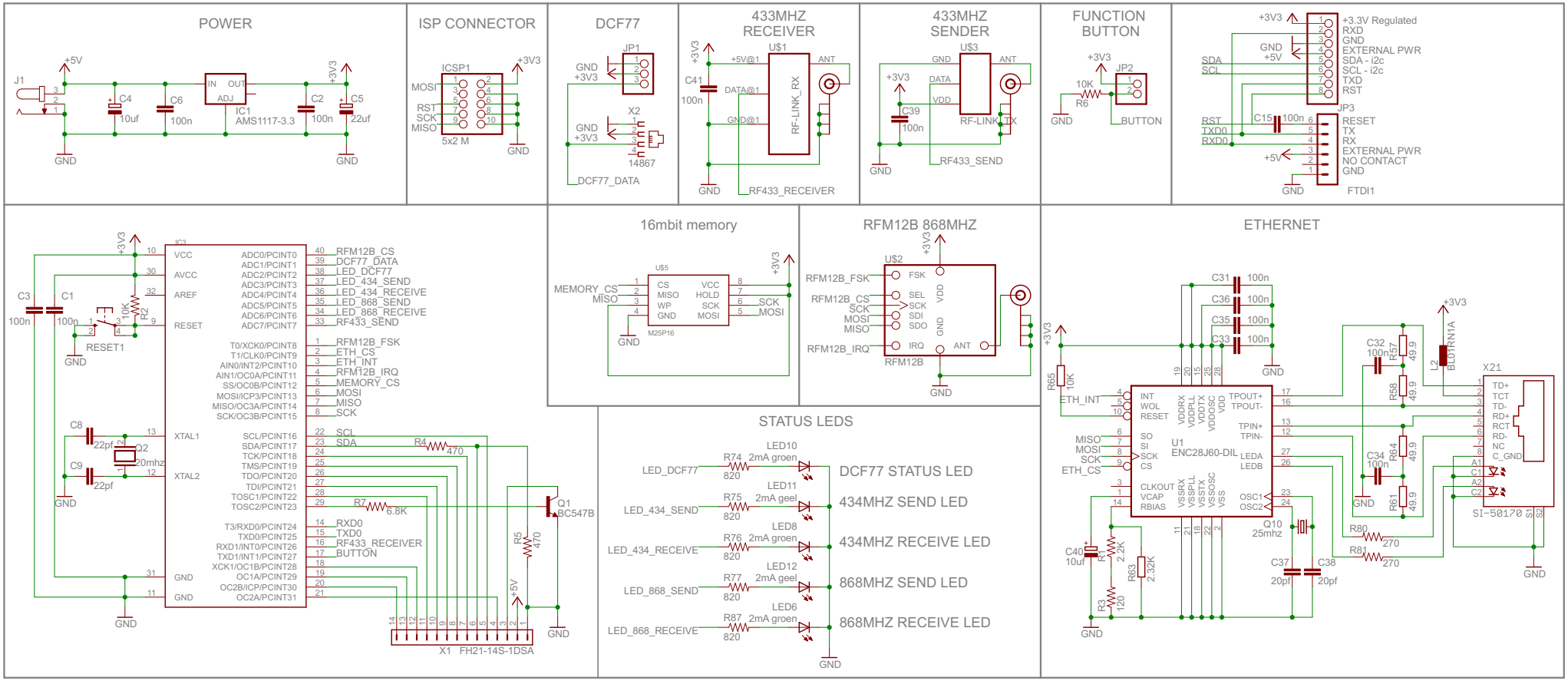
POWER
J1
+5V
C4
10uf
C6
100n
IN OUT
ADJ
IC1
AMS1117-3.3
C2
100n
+3V3
C5
22uf
GND
ISP CONNECTOR
ICSP1
MOSI
RST
SCK
MISO
5x2 M
DCF77
JP1
GND
+3V3
X2
14867
DCF77_DATA
433MHZ RECEIVER
U$1
+3V3
C41
100n
+5V@1
DATA@1
GND@1
ANT
RF-LINK_RX
RF433_RECEIVER
433MHZ SENDER
U$3
GND
DATA
VDD
ANT
RF-LINK_TX
C39
100n
RF433_SEND
FUNCTION BUTTON
JP2
10K
R6
BUTTON
+3.3V Regulated
RXD
GND
EXTERNAL PWR
SDA - i2c
SCL - i2c
TXD
RST
SDA
SCL
JP3
C15
100n
RESET
TX
RX
EXTERNAL PWR
NO CONTACT
GND
TXD0
RXD0
FTDI1
IC3
VCC
AVCC
AREF
RESET
XTAL1
XTAL2
GND
ADC0/PCINT0 RFM12B_CS
ADC1/PCINT1 DCF77_DATA
ADC2/PCINT2 LED_DCF77
ADC3/PCINT3 LED_434_SEND
ADC4/PCINT4 LED_434_RECEIVE
ADC5/PCINT5 LED_868_SEND
ADC6/PCINT6 LED_868_RECEIVE
ADC7/PCINT7 RF433_SEND
T0/XCK0/PCINT8 RFM12B_FSK
T1/CLK0/PCINT9 ETH_CS
AIN0/INT2/PCINT10 ETH_INT
AIN1/OC0A/PCINT11 RFM12B_IRQ
SS/OC0B/PCINT12 MEMORY_CS
MOSI/ICP3/PCINT13 MOSI
MISO/OC3A/PCINT14 MISO
SCK/OC3B/PCINT15 SCK
SCL/PCINT16 SCL
SDA/PCINT17 SDA
TCK/PCINT18
TMS/PCINT19
TDO/PCINT20
TDI/PCINT21
TOSC1/PCINT22
TOSC2/PCINT23
T3/RXD0/PCINT24 RXD0
TXD0/PCINT25 TXD0
RXD1/INT0/PCINT26 RF433_RECEIVER
TXD1/INT1/PCINT27 BUTTON
XCK1/OC1B/PCINT28
OC1A/PCINT29
OC2B/ICP/PCINT30
OC2A/PCINT31
C3
100n
C1
100n
R2
10K
RESET1
C8
22pf
Q2
20mhz
C9
22pf
R4
470
R7
6.8K
Q1
BC547B
R5
470
+5V
X1 FH21-14S-1DSA
16mbit memory
U$5
CS
MISO
WP
GND
VCC
HOLD
SCK
MOSI
M25P16
MEMORY_CS
MISO
SCK
MOSI
RFM12B 868MHZ
U$2
RFM12B_FSK
RFM12B_CS
SCK
MOSI
MISO
RFM12B_IRQ
FSK
SEL
SCK
SDI
SDO
IRQ
VDD
GND
ANT
RFM12B
STATUS LEDS
LED_DCF77
LED_434_SEND
LED_434_RECEIVE
LED_868_SEND
LED_868_RECEIVE
R74 820
R75 820
R76 820
R77 820
R87 820
LED10 2mA groen
LED11 2mA geel
LED8 2mA groen
LED12 2mA geel
LED6 2mA groen
DCF77 STATUS LED
434MHZ SEND LED
434MHZ RECEIVE LED
868MHZ SEND LED
868MHZ RECEIVE LED
ETHERNET
C31 100n
C36 100n
C35 100n
C33 100n
R65 10K
ETH_INT
MISO
MOSI
SCK
ETH_CS
INT
WOL
RESET
SO
SI
SCK
CS
CLKOUT
VCAP
RBIAS
U1
ENC28J60-DIL
VDDRX
VDDPLL
VDDTX
VDDOSC
VDD
VSSRX
VSSPLL
VSSTX
VSSOSC
VSS
TPOUT+
TPOUT-
TPIN+
TPIN-
LEDA
LEDB
OSC1
OSC2
Q10
25mhz
C40
10uf
R1
2.2K
R63
2.32K
R3
120
C37
20pf
C38
20pf
C32
100n
R57
49.9
R58
49.9
C34
100n
R64
49.9
R61
49.9
R80
270
R81
270
L2
BLO1RN1A
X21
TD+
TCT
TD-
RD+
RCT
RD-
NC
C_GND
A1
C1
A2
C2
SI-50170
S1
S2