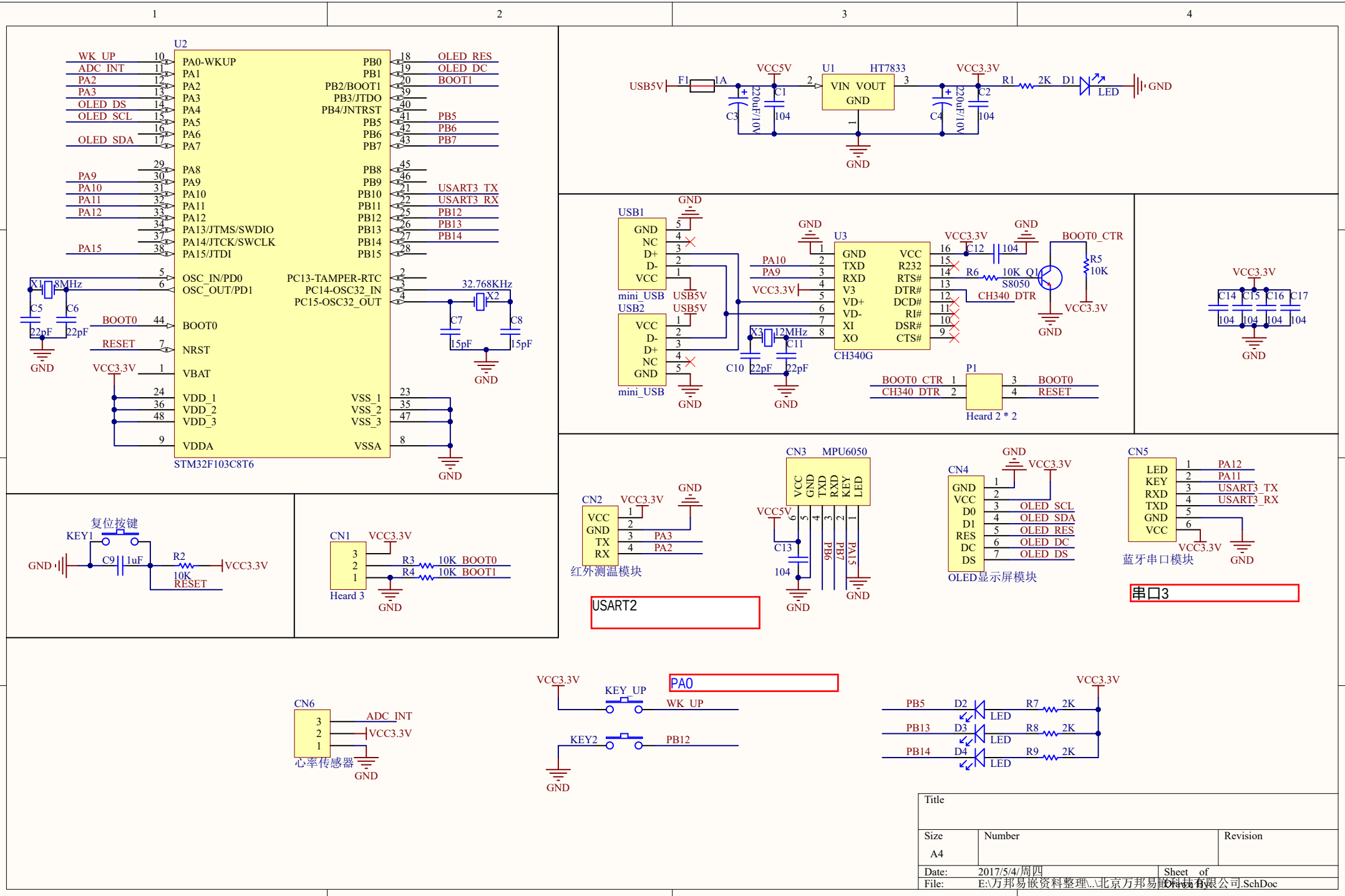

Title		
Size A4	Number	Revision
Date: 2017/5/4/周四	Sheet of	
File: E:\万邦易嵌资料整理\..\北京万邦易嵌科技有限公司.SchDoc		