2023

DEN401/DENM004 - Computational Engineering Coursework

ARNOLD P'LABOKE OKEMA

STUDENT ID: 230219184

Part 1

Structural analysis of ceiling mounted curtain rod bracket.

Abstract

In this study, the structure of a ceiling mounted curtain rod bracket has been analysed to determine the maximum stress in it under static loading. The analysis was carried out using the finite element method considering both hexahedral and tetrahedral elements with both linear and quadratic displacement functions. The study found that the quadratic hexahedral models produced the best results with the best mesh convergence. The maximum stress in the loaded structure was determined through mess convergence study to be 0.568MPa.

1 Introduction

This report details the structural analysis of a curtain rod bracket under static loading conditions. The bracket is one of two mounted to a ceiling and used to support a 6Kg curtain rod. The rod is 30mm in diameter and used to suspend two curtain drapes with a mass of 5Kg each. The ceiling mounted brackets are made of steel with Young's modulus of elasticity of 200GPa and Poisson's ratio of 0.3. They are attached to the ceiling using metallic screws 10mm in diameter. Figure 1: Dimensions of the curtain rod bracket in mm and the force acting on

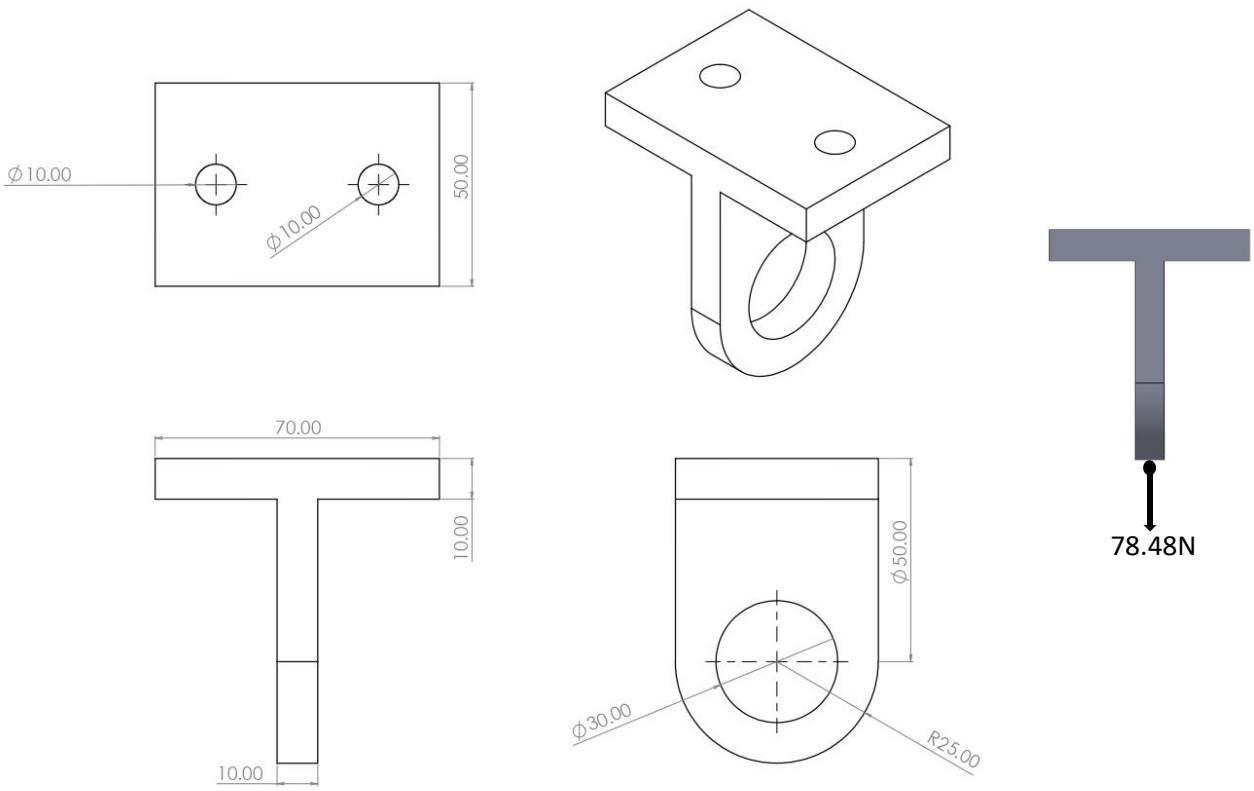

Figure 1: Dimensions of the curtain rod bracket in mm and the force acting on each bracket (right).

each bracket (right). shows the dimensions of each bracket. The dimensions are in millimetres.

The curtain rod and drapes have a total mass of 16Kg and weigh 156.96N. This weight is distributed evenly between the two support brackets such that each bracket is carrying half of the weight. Figure 1 also shows the force acting on each bracket.

2 Methodology

The structural analysis was performed through the finite element method using ABAQUS software.

2.1 Loading and Boundary conditions

The bracket was modelled as a solid homogeneous part. The finite element model consisted of an encastre boundary condition at the interface between the bracket and the ceiling as shown in Figure 2.

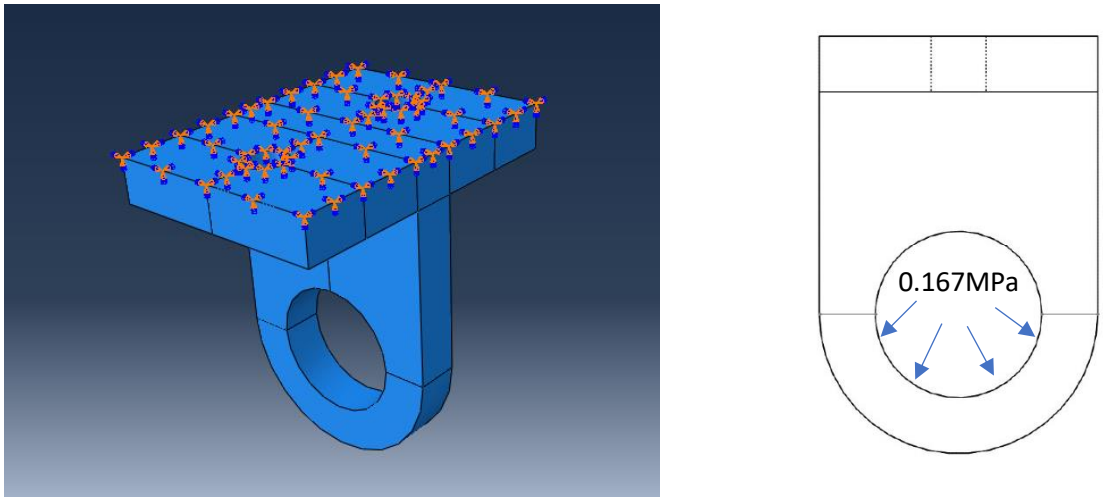

Figure 2: Boundary condition applied to the bracket (left) and load applied to the bracket (right).

Figure 2 also shows how the load was applied in the finite element model. The load was applied as a pressure to the lower half of the surface area of the curtain rod slot. This surface area and the resulting pressure were calculated as shown below.

$$\text{Area} = \frac{\text{Circumference of slot}}{2} \times \text{Thickness}$$

$$\text{Area} = \frac{(2\pi \times 15)}{2} \times 10$$

$$\text{Area} = 471.2\text{mm}^2$$

$$\text{Pressure} = \frac{\text{Force}}{\text{Area}}$$

$$\text{Pressure} = \frac{78.48}{471.2}$$

$$\text{Pressure} = 0.167\text{N/mm}^2 \text{ (MPa)}$$

2.2 Meshing

The bracket was first modelled using both linear and quadratic hexahedral elements in a structured mesh. The element size was reduced from 7mm to 1mm to refine the mesh and the maximum stress at each size was studied. The sizes for the linear hexahedral elements were of 7mm, 5mm, 4mm, 3mm, 2mm and 1mm. The sizes for the Quadratic hexahedral elements were 7mm, 5mm, 2.5mm and 2mm.

The bracket was also modelled using both linear and quadratic tetrahedral elements in a free mesh with element sizes of 7mm, 5mm, 4mm, 3mm and 2.5mm. Figure 3 shows a hexahedral mesh for the 2mm elements and a tetrahedral mesh for the 2.5mm elements.

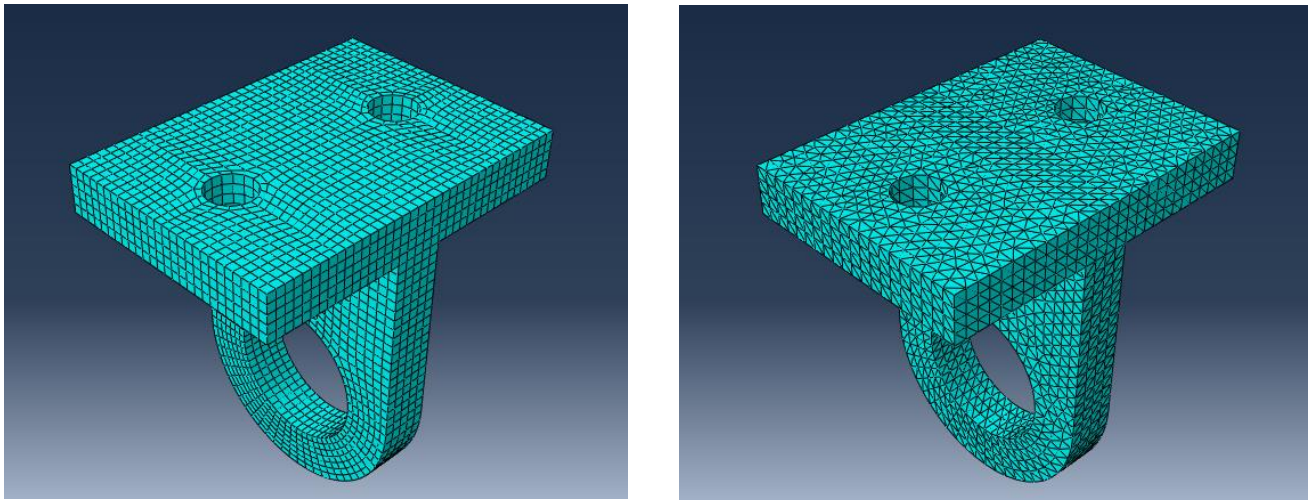

Figure 3: Structured mesh with hexahedral elements (left) and free mesh with tetrahedral elements (right).

3 Results and discussion

The tables below show the number of elements and the maximum stress values obtained from the analysis for the hexahedral elements at the different mesh resolutions.

Linear hexahedral elements

Element size (mm)	Number of elements	Maximum stress (MPa)
7	296	0.371
5	516	0.418
4	1230	0.450
3	1890	0.457
2	7865	0.500
1	57020	0.534

Quadratic hexahedral elements

Element size (mm)	Number of elements	Maximum stress (MPa)
7	296	0.561
5	516	0.567
2.5	3768	0.568
2	7865	0.568

The graphs below show the relationship between the number of elements and the maximum stress values for the hexahedral elements at the different mesh resolutions.

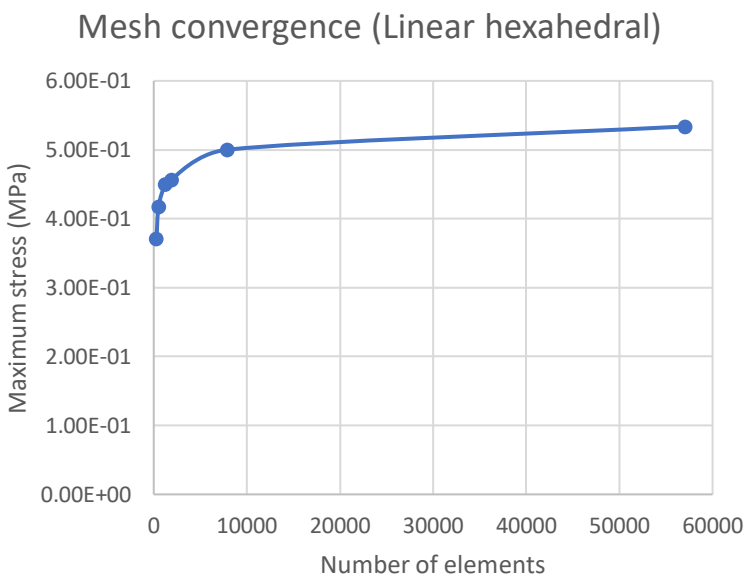

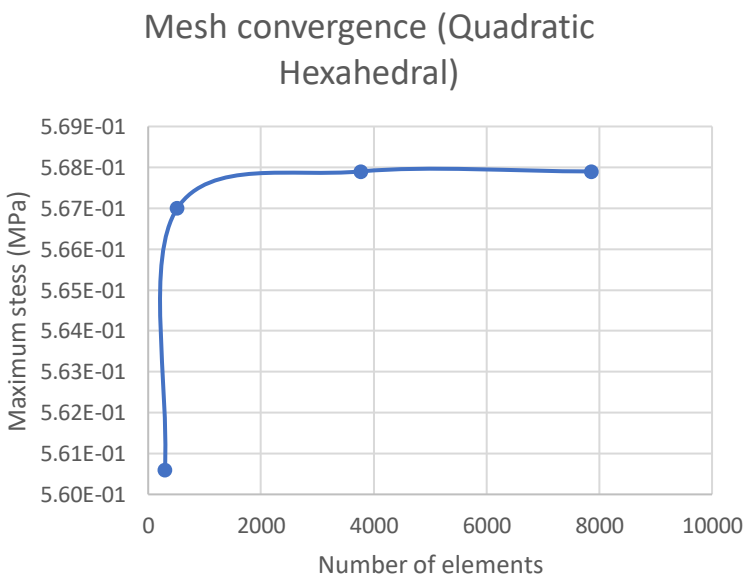

The tables below show the number of elements and the maximum stress values obtained from the analysis for the tetrahedral elements at the different mesh resolutions.

Linear tetrahedral elements

Element size (mm)	Number of elements	Maximum stress (MPa)
7	1611	0.341
5	3627	0.401
4	8170	0.454
3	15205	0.485
2.5	28407	0.503

Quadratic tetrahedral elements

Element size (mm)	Number of elements	Maximum stress (MPa)
7	1611	0.534
5	3627	0.553
4	8170	0.559
3	15205	0.562
2.5	28407	0.565

The graphs below show the relationship between the number of elements and the maximum stress values for the tetrahedral elements at the different mesh resolutions.

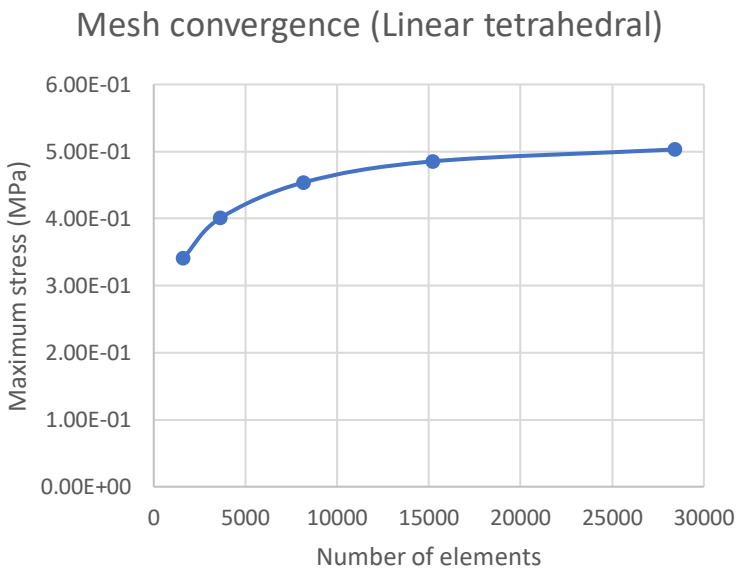

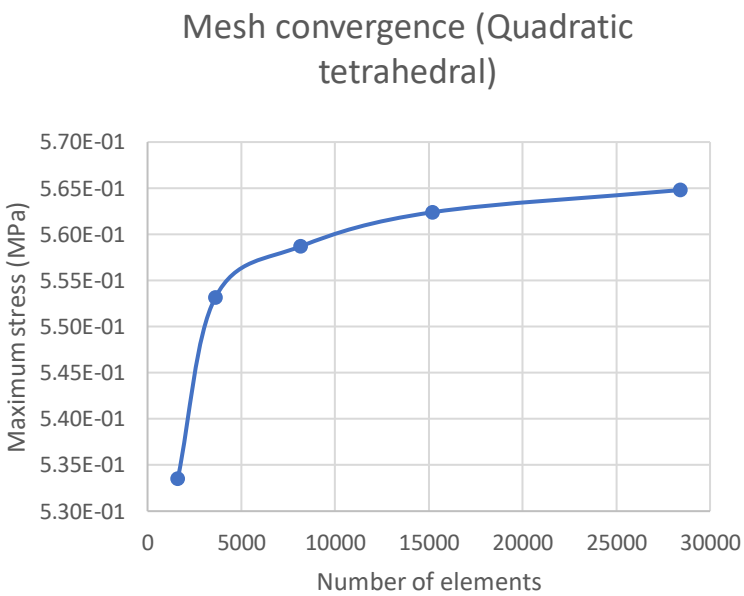

For both the hexahedral and tetrahedral elements, the variations with quadratic displacement functions give a tighter cluster of maximum stress results than their linear counterparts. This suggests that the results from the elements with quadratic displacement functions are more accurate than those from the elements with linear displacement functions. Quadratic displacement functions are known to give more accurate results than linear displacement functions as they are better at modelling curved geometries (Matthias Harnau, 2002). The results show that with linear displacement functions, results are more sensitive to the mesh resolution and a very fine mesh in necessary to obtain accuracy. This is consistent with the findings of a study by Teseo and his colleagues (Teseo Schneider, 2022) that found that linear elements take longer to produce accurate solutions making them less efficient than higher order elements. The results also show that the maximum stresses achieved with the tetrahedral elements are lower than those achieved with hexahedral elements for comparable element sizes. As such, finer mesh resolutions would be necessary to achieve convergence with the tetrahedral elements. A study by Steven and his colleagues (Steven E. Benzley, 1995) also found that hexahedral elements tend to perform better than tetrahedral elements. For this study, the quadratic hexahedral elements give the best mesh convergence with a maximum

stress of 0.568MPa. Figure 4 shows the deformed bracket with a mesh of quadratic hexahedral elements of size 2mm.

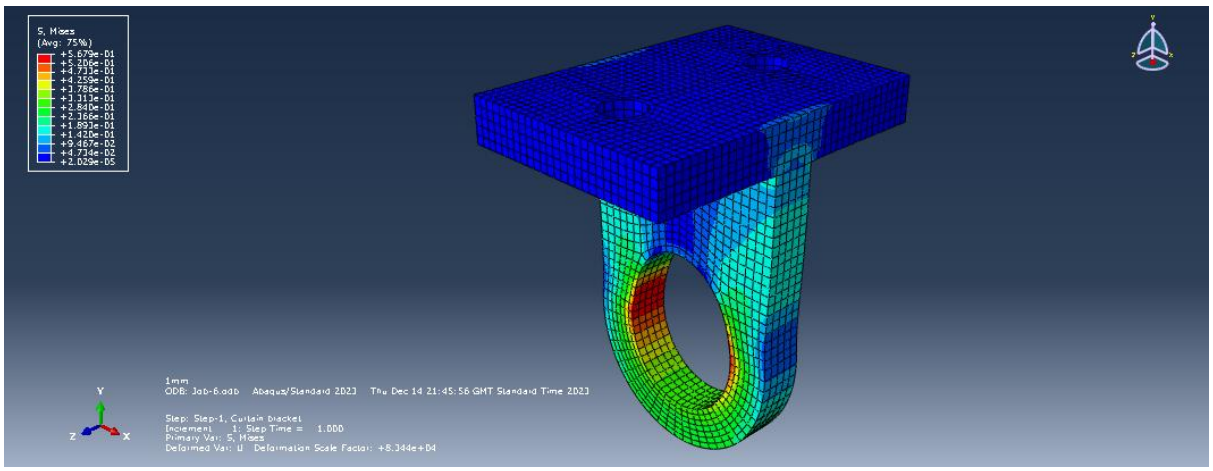

Figure 4: Deformed bracket with quadratic hexahedral mesh of element size 2mm.

4 Conclusions

The following conclusions were made from the results of this study. For modelling 3D structures in finite element analysis, quadratic hexahedral elements are the most efficient and give the best results. The results obtained from quadratic tetrahedral elements are also acceptable although they have a slight error. Using a free mesh with tetrahedral elements results in a higher number of elements than a structured mesh with hexahedral elements for an equivalent elements size. This creates a more complex computational task. When linear displacement functions are used, accuracy can only be attained when very fine mesh resolutions are used. The maximum stress in the curtain rod bracket is 0.568MPa.

5 References

Matthias Harnau, K. S. (2002). About linear and quadratic “Solid-Shell” elements at large deformations. *Computers & Structures.*, Volume 80, Issues 9–10, Pages 805-817.

Steven E. Benzley, E. P. (1995). A Comparison of All Hexagonal and All Tetrahedral Finite Element Meshes for Elastic and Elasto-plastic Analysis. https://www.researchgate.net/publication/267259986_A_Comparison_of_All_Hexagonal_and_All_Tetrahedral_Finite_Element_Meshes_for_Elastic_and_Elasto-Plastic_Analysis?enrichId=rgreq-1b77fe8bf9e2cd44e6e2ff5d35ddd612-XXX&enrichSource=Y292ZXJQYWdlOzI2NzI1OTk4Njt.

Teseo Schneider, Y. H. (2022). A Large-Scale Comparison of Tetrahedral and Hexahedral Elements for Solving Elliptic PDEs with the Finite Element Method. *ACM Transactions on Graphics.*, Volume 41, Issue 3, Article No.: 23, pp 1–14, https://doi.org/10.1145/3508372.

Part 2

Topology optimisation of wall mounted curtain rod bracket

1 Introduction

This report is a summary of the findings of the topology optimisation process for the structure of a wall mounted curtain rod bracket. The bracket is one of two to be fixed to a wall to support a curtain rod with a diameter of 30mm and a mass of 6Kg holding two curtain drapes with a mass of 5Kg each. The combined weight of the rod and drapes is evenly distributed between the two brackets such that each bracket is supporting half the total weight. The force acting on each bracket is thus 78.48N. The brackets are made of steel with Young's modulus of elasticity of 200GPa and Poisson's ratio of 0.3. The bracket under study was subjected to topology optimisation from an initial domain that was rectangular with a semi-circular cut at the top. This cut is meant to accommodate the rod. The goal of the process was to maximise the stiffness of the structure while significantly reducing the volume of the original domain. Figure 5 shows the dimensions of the initial domain in mm. The bracket has a thickness of 20mm.

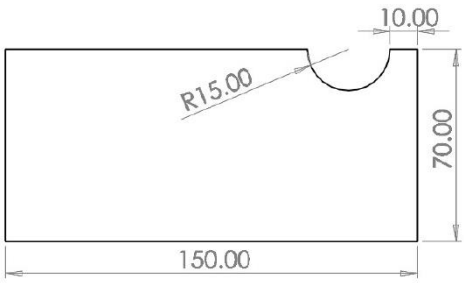

Figure 5: Dimensions of initial domain for topology optimization.

2 Methodology

The structure was optimized using the Abaqus topology optimization module (ATOM). The bracket was modelled as a 2D planar shell with an encastre boundary condition at its interface with the wall. The load applied to the structure in the model was a pressure of 0.0833MPa acting downward on the semicircular cut surface due to the weight of the rod. The structure was modelled using quadratic quadrilateral elements in a structured mesh. The optimization process was set to minimise strain energy in the structure while considering volume fraction as a constraint. The volume constraint was first set to 30% of the original domain. The process was repeated for 20 cycles to obtain the final design. The optimization process was then repeated at different mesh resolutions. The output was studied for element sizes of 5mm, 4mm, 3mm, 2mm and 1mm with corresponding mesh resolutions of 411, 612, 1012, 2424 and 9891 elements respectively. Different itterations of the final design at the highest mesh resolution were studied considering volume constraints of 10%, 20% and 40% of the original domain.

3 Results and discussion

With the volume constrained to 30% of the initial domain, the coarse mesh with 411 elements produced the thickest ribs in its final optimized structure. The structure also had several discontinious sections including a hanging rib. Discontinuities in a structure increase its compliance, reducing its stiffness (Ming-Hsiu Hsu, 2005). When the mesh resolution was increased to 612 elements, the ribs of the final structure shrunk slighly in thickness but the structure still had a hanging rib creating a discontinuity. Increasing the mesh resolution further to 1012 elements finally created a continuous optimized structure with even thinner ribs. These rib sections shrunk further when the mesh resolution was increased to 2424 and finally 9891 elements. The finest mesh of 9891 elements had the thinest ribs with material distributed

evenly to form a continuous structure. Figure 2 shows the final topology with 411 elements and that with 9891 elements.

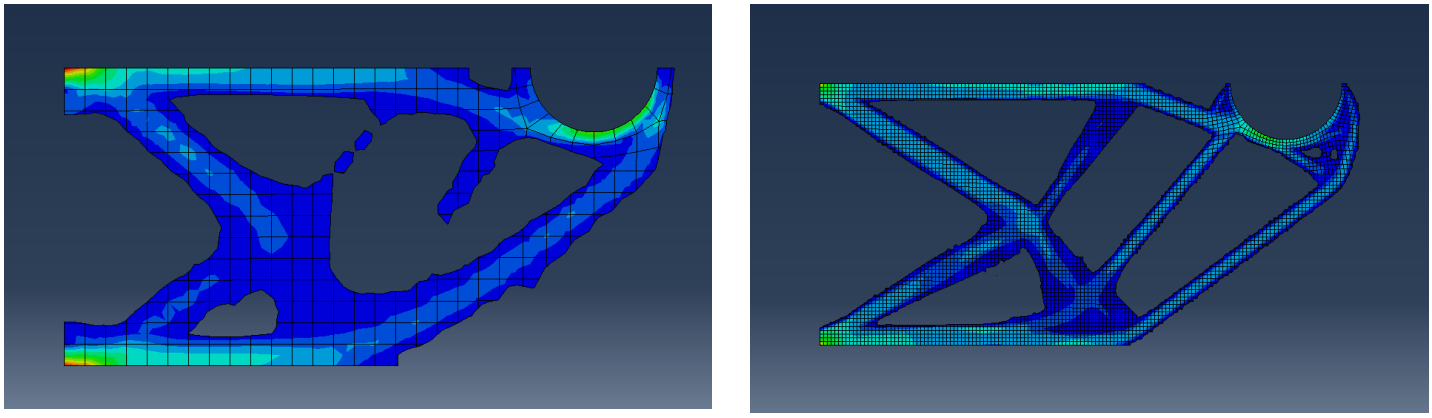

Figure 6: Design output at 30% volume with 411 elements (left) and 9891 elements (right).

The volume constaint limits the amount of material to be distributed in the final product. However the results show that the distribution of the available material depends on the mesh resolution. At the highest mesh resolution of 9891 elements, the 10% volume constraint creates a discontinuous structure with some floating sections because of insufficient material. The 40% volume constraint with the finest mesh produces a continuous structure that has excess unecessary material compared to the 30% volume constraint. Figure 3 shows the design output at 10% volume and 40% volume. With the volume constrained to 20%, the resulting structure is continuous and quite similar to the result at the 30% volume constraint but has a significantly higher maximum stress. The maximum stress in the 20% volume structure was 3.7MPa while the maximum stress in the 30% volume structure was 2.5MPa.

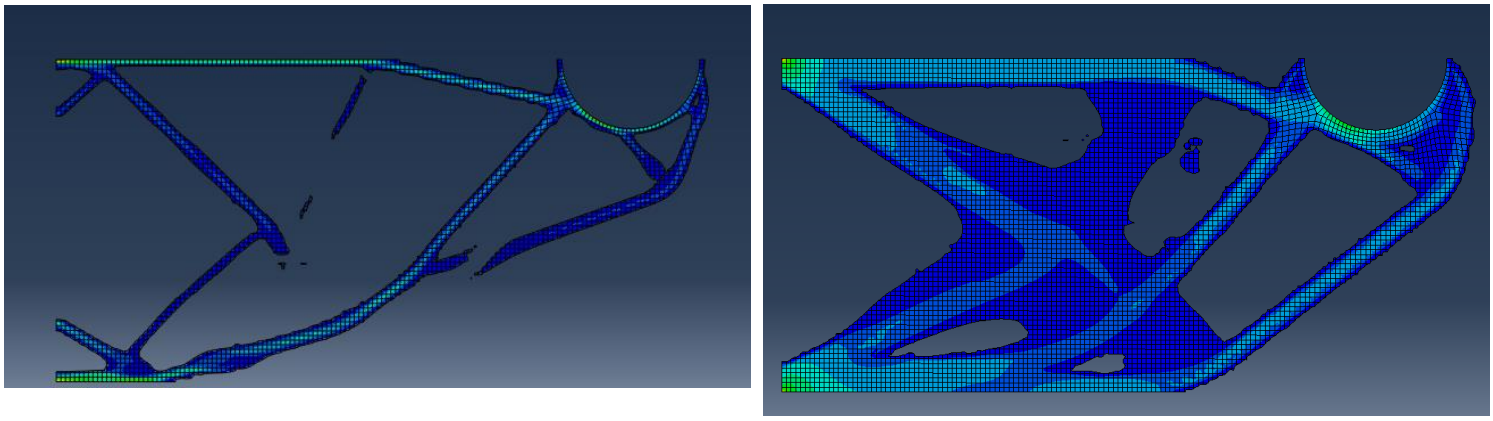

Figure 7: Design output at 10% volume (left) and 40% volume with the finest mesh.

4 Conclusions

As mesh resolution is increased, material is distributed more evenly and efficiently within the domain in the topology optimization process. Volume constraints that are too low yield structures that are discontinuous and not feasible for real world applications. For this sudy, the 30% volume constraint produces the most efficient structure shown in Figure 2. The final design chosen here can be refined for manufacture by making it shorter to save material as there is room to reduce its length.

5 References

Ming-Hsiu Hsu, Y.-L. H. (2005). Generalization of two- and three-dimensional structural topology optimization. *Engineering Optimization*, Vol.37, No.1 ,83–102, DOI:10.1080/03052150412331271208.