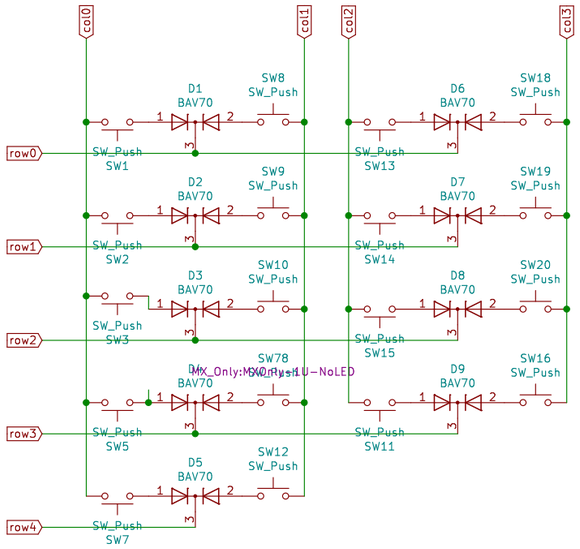

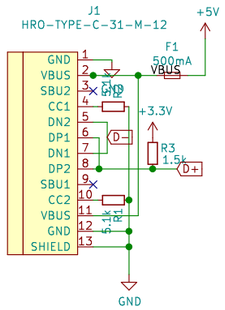

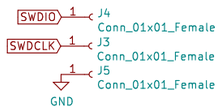

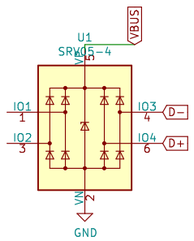

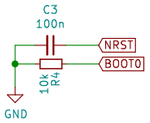

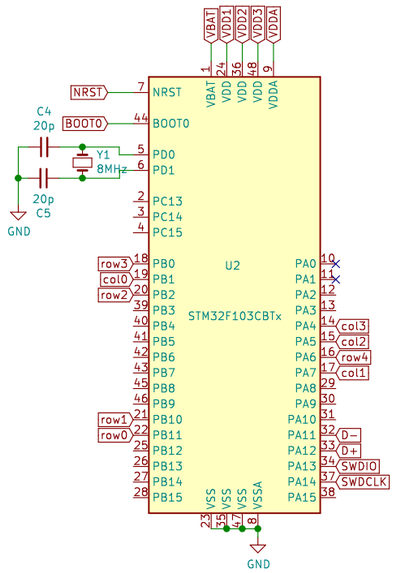

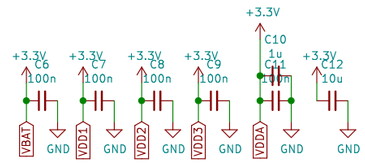

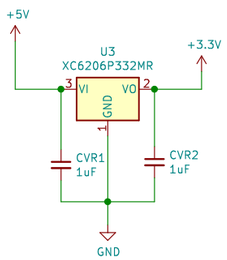

TT

Sheet: /
File: numpad.sch

Title: numpad

Size: A3	Date:	Rev: 1.0
KiCad E.D.A. kicad (5.1.4)-1		Id: 1/1