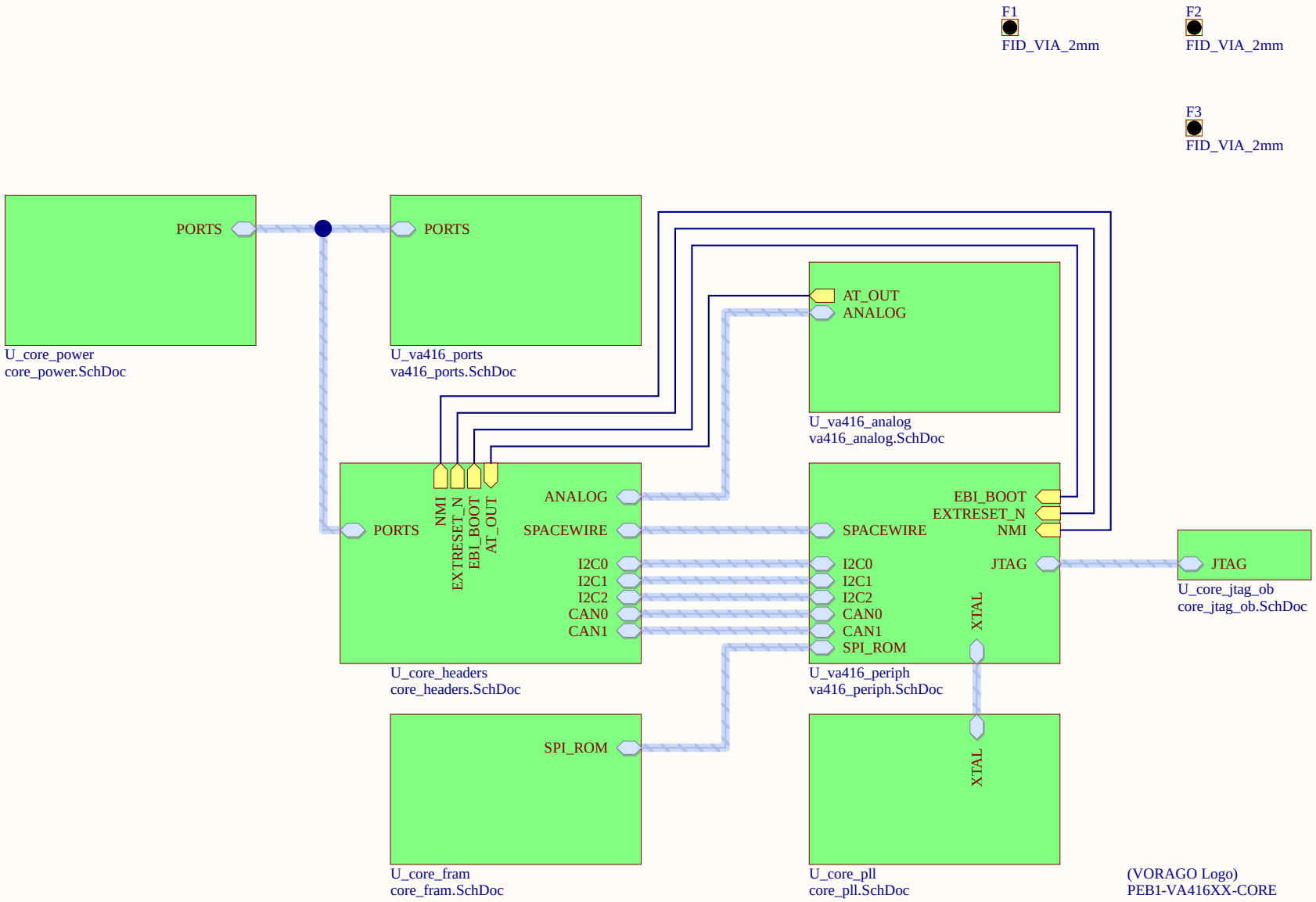

Title	PEB1-VA416XX-CORE	
Size: A	Number: VA416-EVK-B2	Revision: 0.1
Date: 11/15/2019		Sheet 1 of 9
File: C:\svn\..\va416_core_top.SchDoc		Drawn By: DWM

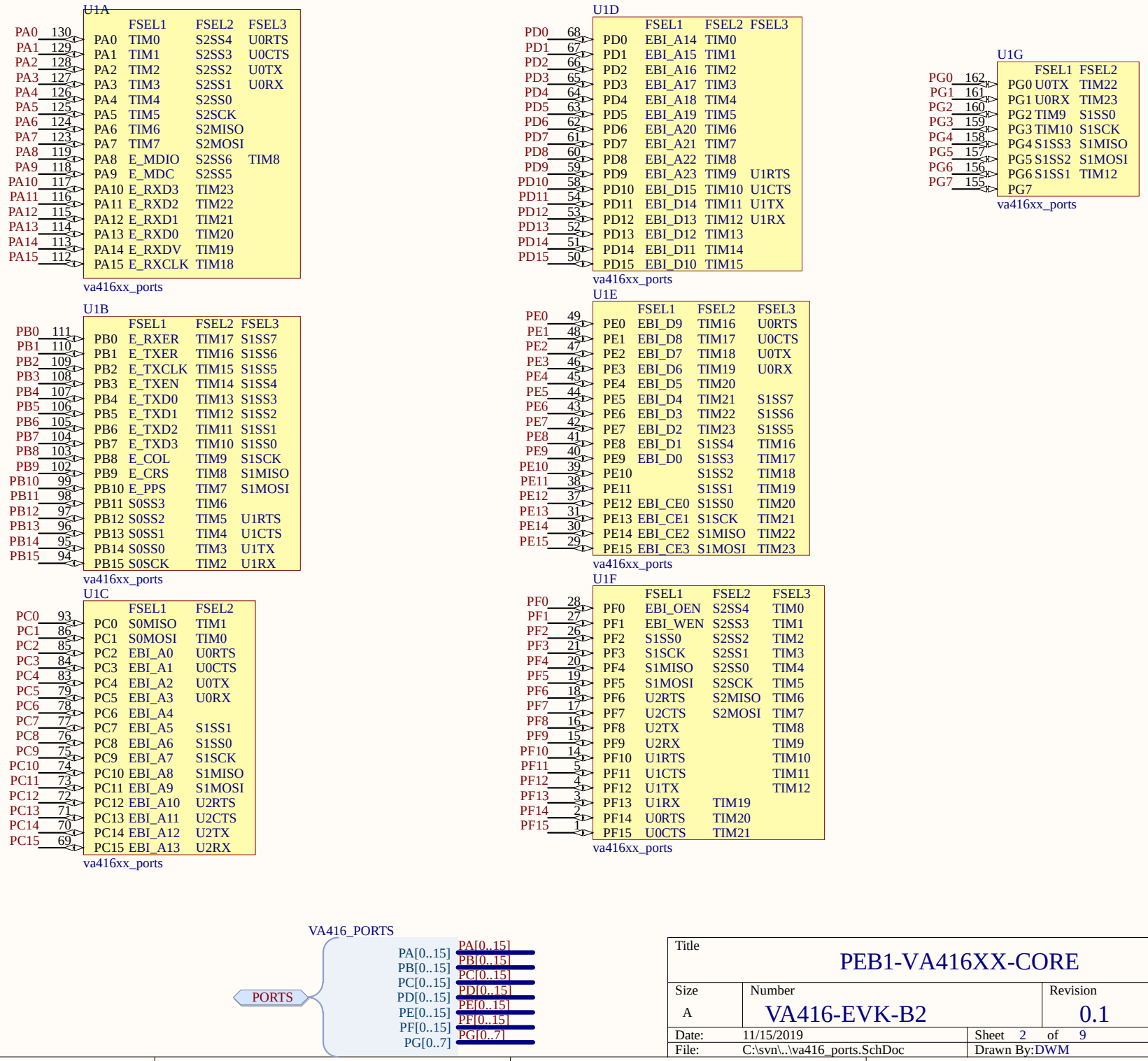
U1A
FSEL1 FSEL2 FSEL3
PA0 130 PA0 TIM0 S2SS4 U0RTS
PA1 129 PA1 TIM1 S2SS3 U0CTS
PA2 128 PA2 TIM2 S2SS2 U0TX
PA3 127 PA3 TIM3 S2SS1 U0RX
PA4 126 PA4 TIM4 S2SS0
PA5 125 PA5 TIM5 S2SCK
PA6 124 PA6 TIM6 S2MISO
PA7 123 PA7 TIM7 S2MOSI
PA8 119 PA8 E_MDIO S2SS6 TIM8
PA9 118 PA9 E_MDC S2SS5
PA10 117 PA10 E_RXD3 TIM23
PA11 116 PA11 E_RXD2 TIM22
PA12 115 PA12 E_RXD1 TIM21
PA13 114 PA13 E_RXD0 TIM20
PA14 113 PA14 E_RXDV TIM19
PA15 112 PA15 E_RXCLK TIM18
va416xx_ports
U1B
FSEL1 FSEL2 FSEL3
PB0 111 PB0 E_RXER TIM17 S1SS7
PB1 110 PB1 E_TXER TIM16 S1SS6
PB2 109 PB2 E_TXCLK TIM15 S1SS5
PB3 108 PB3 E_TXEN TIM14 S1SS4
PB4 107 PB4 E_TXD0 TIM13 S1SS3
PB5 106 PB5 E_TXD1 TIM12 S1SS2
PB6 105 PB6 E_TXD2 TIM11 S1SS1
PB7 104 PB7 E_TXD3 TIM10 S1SS0
PB8 103 PB8 E_COL TIM9 S1SCK
PB9 102 PB9 E_CRS TIM8 S1MISO
PB10 99 PB10 E_PPS TIM7 S1MOSI
PB11 98 PB11 S0SS3 TIM6
PB12 97 PB12 S0SS2 TIM5 U1RTS
PB13 96 PB13 S0SS1 TIM4 U1CTS
PB14 95 PB14 S0SS0 TIM3 U1TX
PB15 94 PB15 S0SCK TIM2 U1RX
va416xx_ports
U1C
FSEL1 FSEL2
PC0 93 PC0 S0MISO TIM1
PC1 86 PC1 S0MOSI TIM0
PC2 85 PC2 EBI_A0 U0RTS
PC3 84 PC3 EBI_A1 U0CTS
PC4 83 PC4 EBI_A2 U0TX
PC5 79 PC5 EBI_A3 U0RX
PC6 78 PC6 EBI_A4
PC7 77 PC7 EBI_A5 S1SS1
PC8 76 PC8 EBI_A6 S1SS0
PC9 75 PC9 EBI_A7 S1SCK
PC10 74 PC10 EBI_A8 S1MISO
PC11 73 PC11 EBI_A9 S1MOSI
PC12 72 PC12 EBI_A10 U2RTS
PC13 71 PC13 EBI_A11 U2CTS
PC14 70 PC14 EBI_A12 U2TX
PC15 69 PC15 EBI_A13 U2RX
va416xx_ports
U1D
FSEL1 FSEL2 FSEL3
PD0 68 PD0 EBI_A14 TIM0
PD1 67 PD1 EBI_A15 TIM1
PD2 66 PD2 EBI_A16 TIM2
PD3 65 PD3 EBI_A17 TIM3
PD4 64 PD4 EBI_A18 TIM4
PD5 63 PD5 EBI_A19 TIM5
PD6 62 PD6 EBI_A20 TIM6
PD7 61 PD7 EBI_A21 TIM7
PD8 60 PD8 EBI_A22 TIM8
PD9 59 PD9 EBI_A23 TIM9 U1RTS
PD10 58 PD10 EBI_D15 TIM10 U1CTS
PD11 54 PD11 EBI_D14 TIM11 U1TX
PD12 53 PD12 EBI_D13 TIM12 U1RX
PD13 52 PD13 EBI_D12 TIM13
PD14 51 PD14 EBI_D11 TIM14
PD15 50 PD15 EBI_D10 TIM15
va416xx_ports
U1E
FSEL1 FSEL2 FSEL3
PE0 49 PE0 EBI_D9 TIM16 U0RTS
PE1 48 PE1 EBI_D8 TIM17 U0CTS
PE2 47 PE2 EBI_D7 TIM18 U0TX
PE3 46 PE3 EBI_D6 TIM19 U0RX
PE4 45 PE4 EBI_D5 TIM20
PE5 44 PE5 EBI_D4 TIM21 S1SS7
PE6 43 PE6 EBI_D3 TIM22 S1SS6
PE7 42 PE7 EBI_D2 TIM23 S1SS5
PE8 41 PE8 EBI_D1 S1SS4 TIM16
PE9 40 PE9 EBI_D0 S1SS3 TIM17
PE10 39 PE10 S1SS2 TIM18
PE11 38 PE11 S1SS1 TIM19
PE12 37 PE12 EBI_CE0 S1SS0 TIM20
PE13 31 PE13 EBI_CE1 S1SCK TIM21
PE14 30 PE14 EBI_CE2 S1MISO TIM22
PE15 29 PE15 EBI_CE3 S1MOSI TIM23
va416xx_ports
U1F
FSEL1 FSEL2 FSEL3
PF0 28 PF0 EBI_OEN S2SS4 TIM0
PF1 27 PF1 EBI_WEN S2SS3 TIM1
PF2 26 PF2 S1SS0 S2SS2 TIM2
PF3 21 PF3 S1SCK S2SS1 TIM3
PF4 20 PF4 S1MISO S2SS0 TIM4
PF5 19 PF5 S1MOSI S2SCK TIM5
PF6 18 PF6 U2RTS S2MISO TIM6
PF7 17 PF7 U2CTS S2MOSI TIM7
PF8 16 PF8 U2TX TIM8
PF9 15 PF9 U2RX TIM9
PF10 14 PF10 U1RTS TIM10
PF11 5 PF11 U1CTS TIM11
PF12 4 PF12 U1TX TIM12
PF13 3 PF13 U1RX TIM19
PF14 2 PF14 U0RTS TIM20
PF15 1 PF15 U0CTS TIM21
va416xx_ports
U1G
FSEL1 FSEL2
PG0 162 PG0 U0TX TIM22
PG1 161 PG1 U0RX TIM23
PG2 160 PG2 TIM9 S1SS0
PG3 159 PG3 TIM10 S1SCK
PG4 158 PG4 S1SS3 S1MISO
PG5 157 PG5 S1SS2 S1MOSI
PG6 156 PG6 S1SS1 TIM12
PG7 155 PG7
va416xx_ports
VA416_PORTS
PORTS
PA[0..15]
PB[0..15]
PC[0..15]
PD[0..15]
PE[0..15]
PF[0..15]
PG[0..7]
PA[0..15]
PB[0..15]
PC[0..15]
PD[0..15]
PE[0..15]
PF[0..15]
PG[0..7]
Title
PEB1-VA416XX-CORE
Size
A
Number
VA416-EVK-B2
Revision
0.1
Date: 11/15/2019
Sheet 2 of 9
File: C:\svn\..\va416_ports.SchDoc
Drawn By: DWM

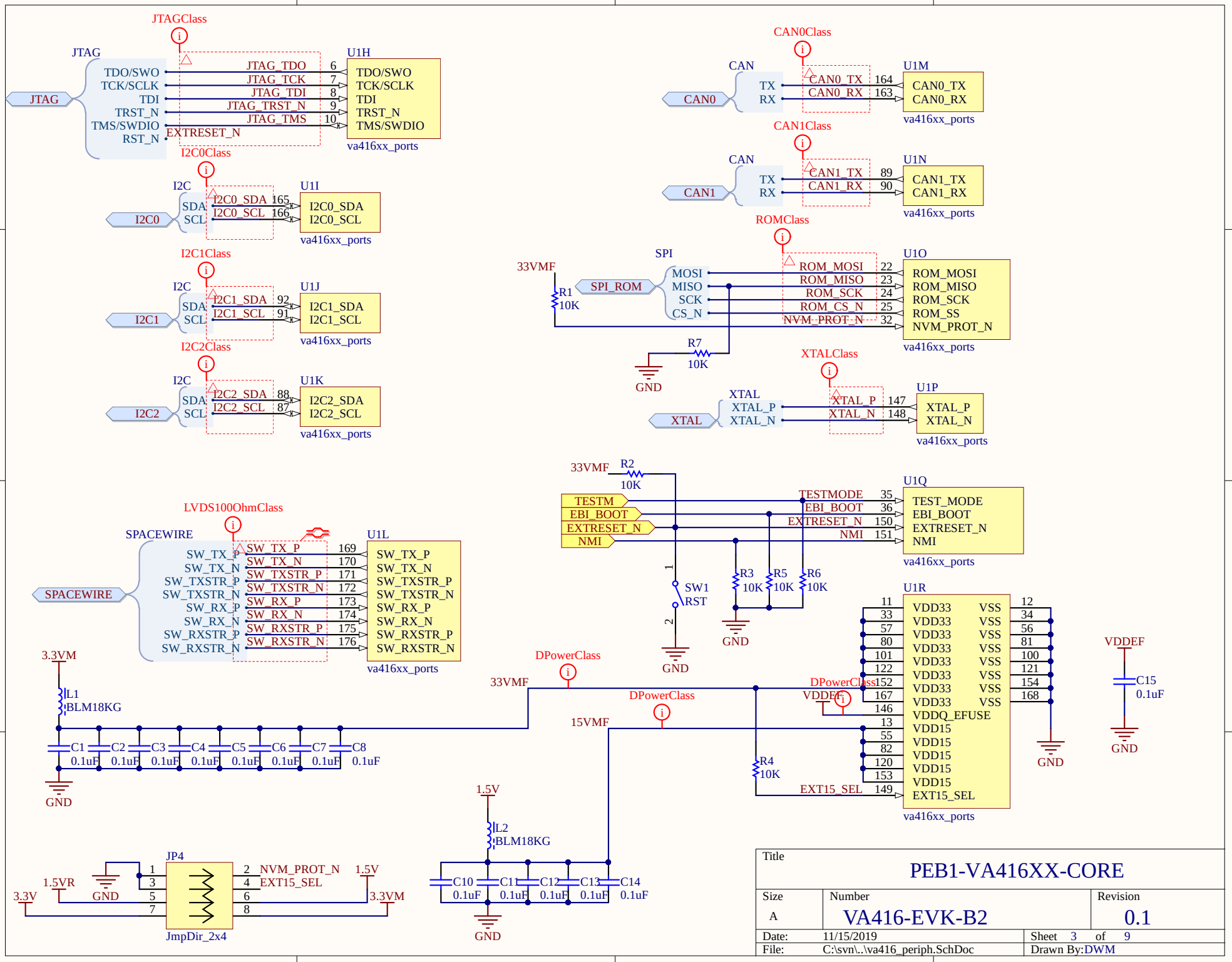
JTAGClass
JTAG
TDO/SWO
TCK/SCLK
TDI
TRST_N
TMS/SWDIO
RST_N
JTAG_TDO 6
JTAG_TCK 7
JTAG_TDI 8
JTAG_TRST_N 9
JTAG_TMS 10
EXTRESET_N
U1H
va416xx_ports
I2C0Class
I2C
SDA
SCL
I2C0
I2C0_SDA 165
I2C0_SCL 166
U1I
I2C1Class
I2C1
I2C1_SDA 92
I2C1_SCL 91
U1J
I2C2Class
I2C2
I2C2_SDA 88
I2C2_SCL 87
U1K
LVDS100OhmClass
SPACEWIRE
SW_TX_P 169
SW_TX_N 170
SW_TXSTR_P 171
SW_TXSTR_N 172
SW_RX_P 173
SW_RX_N 174
SW_RXSTR_P 175
SW_RXSTR_N 176
U1L
CAN0Class
CAN
CAN0
TX
RX
CAN0_TX 164
CAN0_RX 163
U1M
CAN1Class
CAN1
CAN1_TX 89
CAN1_RX 90
U1N
ROMClass
SPI
SPI_ROM
MOSI
MISO
SCK
CS_N
ROM_MOSI 22
ROM_MISO 23
ROM_SCK 24
ROM_CS_N 25
NVM_PROT_N 32
U1O
33VMF
R1
10K
R7
10K
GND
XTALClass
XTAL
XTAL_P
XTAL_N
XTAL_P 147
XTAL_N 148
U1P
TESTM
EBI_BOOT
EXTRESET_N
NMI
TESTMODE 35
EBI_BOOT 36
EXTRESET_N 150
NMI 151
U1Q
R2
10K
SW1
RST
R3
10K
R5
10K
R6
10K
U1R
VDD33
VSS
VDDQ_EFUSE
VDD15
EXT15_SEL
DPowerClass
VDDEF
C15
0.1uF
3.3VM
L1
BLM18KG
C1
C2
C3
C4
C5
C6
C7
C8
0.1uF
15VMF
R4
10K
1.5V
L2
BLM18KG
C10
C11
C12
C13
C14
JP4
1.5VR
3.3V
NVM_PROT_N
EXT15_SEL
JmpDir_2x4
Title
PEB1-VA416XX-CORE
Size
A
Number
VA416-EVK-B2
Revision
0.1
Date: 11/15/2019
File: C:\svn\..\va416_periph.SchDoc
Sheet 3 of 9
Drawn By: DWM

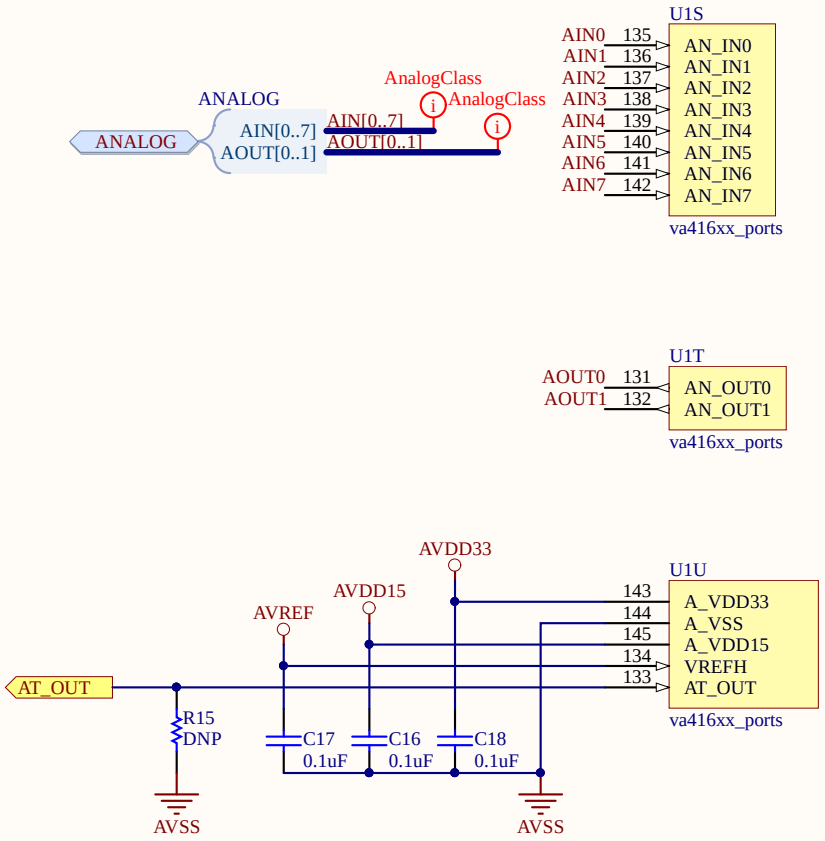

Title	PEB1-VA416XX-CORE	
Size: A	Number: VA416-EVK-B2	Revision: 0.1
Date: 11/15/2019	Sheet 4 of 9	
File: C:\svn\..\va416_analog.SchDoc	Drawn By: DWM	

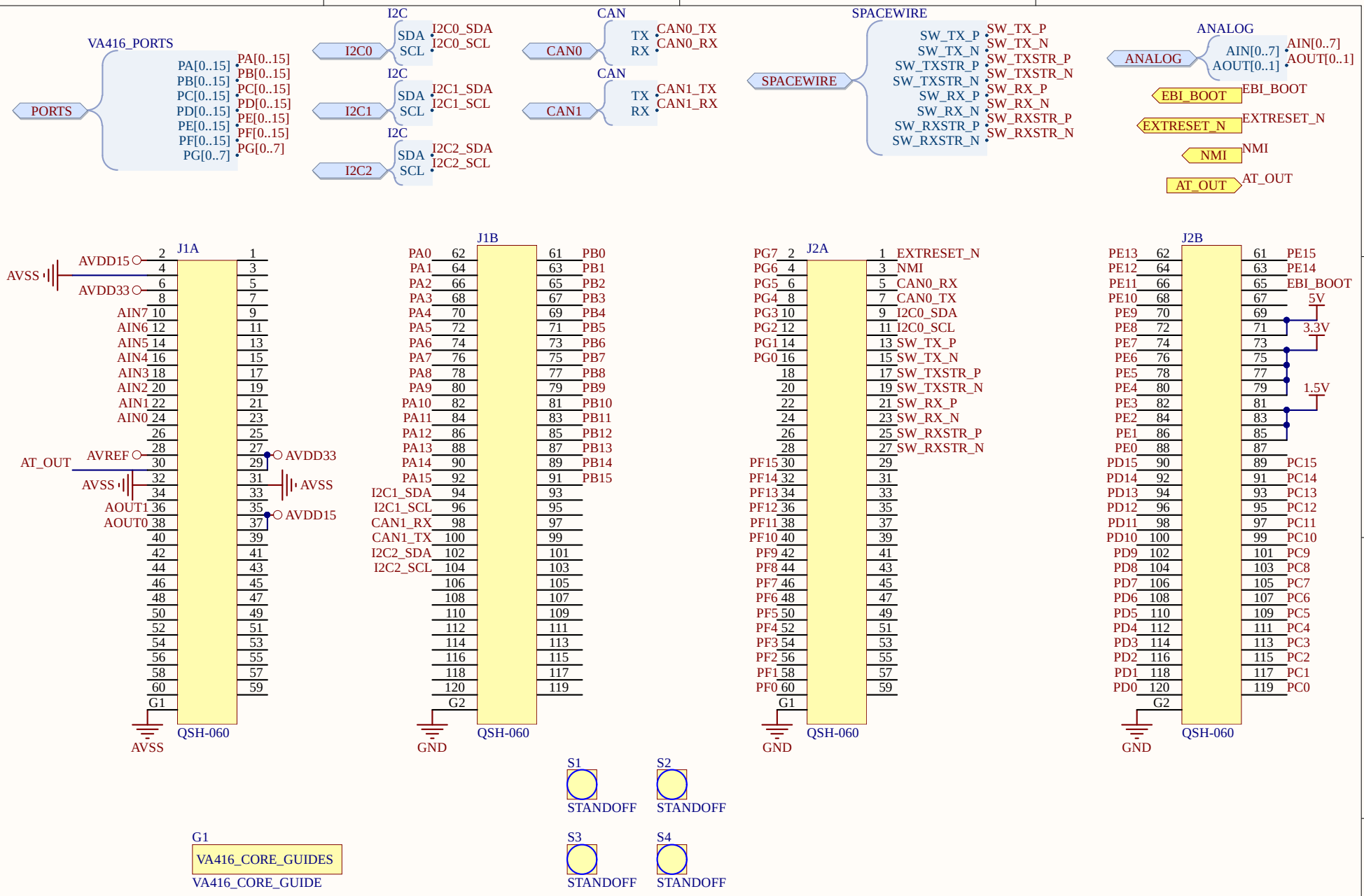

Title	PEB1-VA416XX-CORE	
Size: A	Number: VA416-EVK-B2	Revision: 0.1
Date: 11/15/2019	Sheet 5 of 9	
File: C:\svn\..\core_headers.SchDoc	Drawn By: DWM	

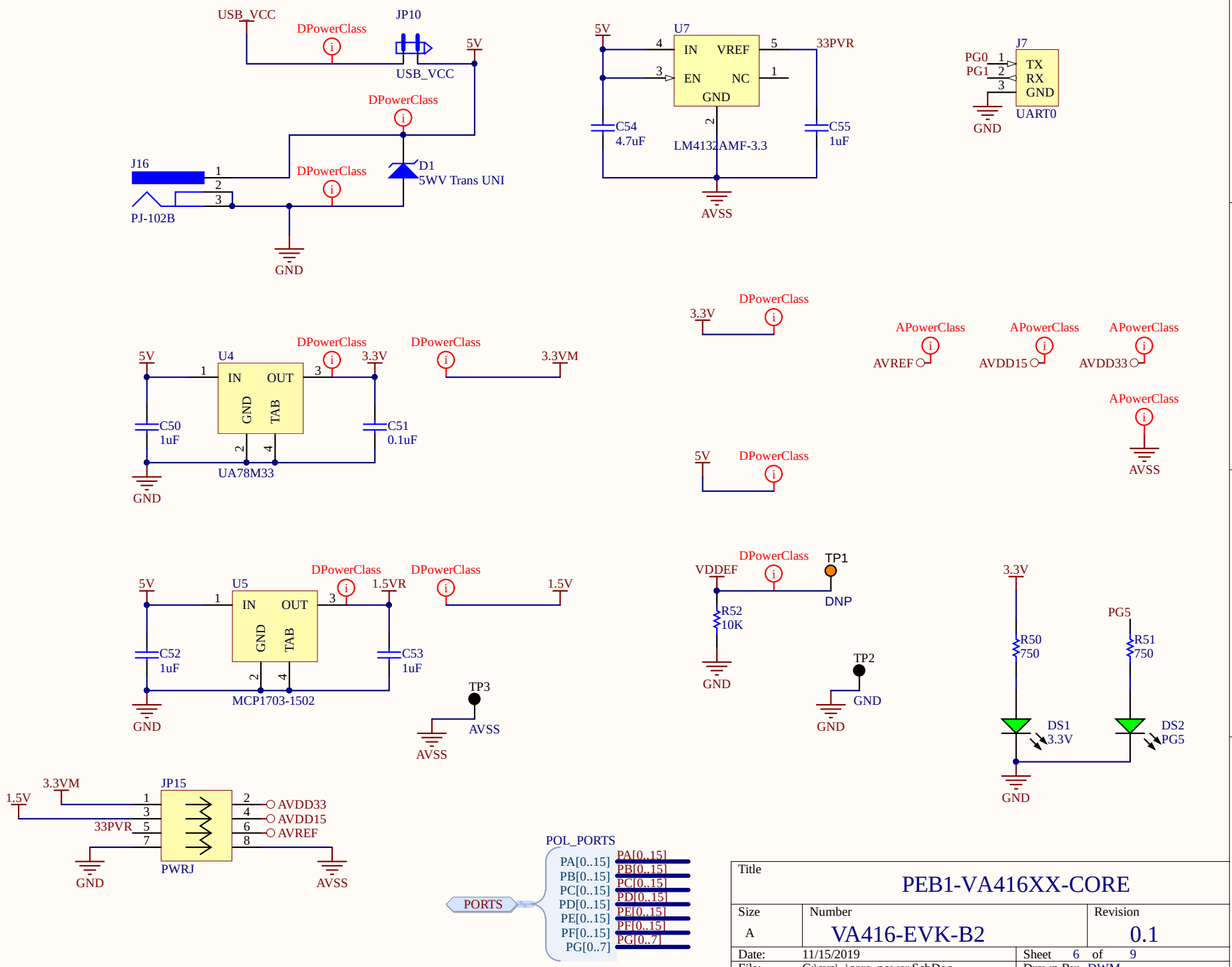

Title	PEB1-VA416XX-CORE	
Size: A	Number: VA416-EVK-B2	Revision: 0.1
Date: 11/15/2019	Sheet 6 of 9	
File: C:\svn\..\core_power.SchDoc	Drawn By: DWM	

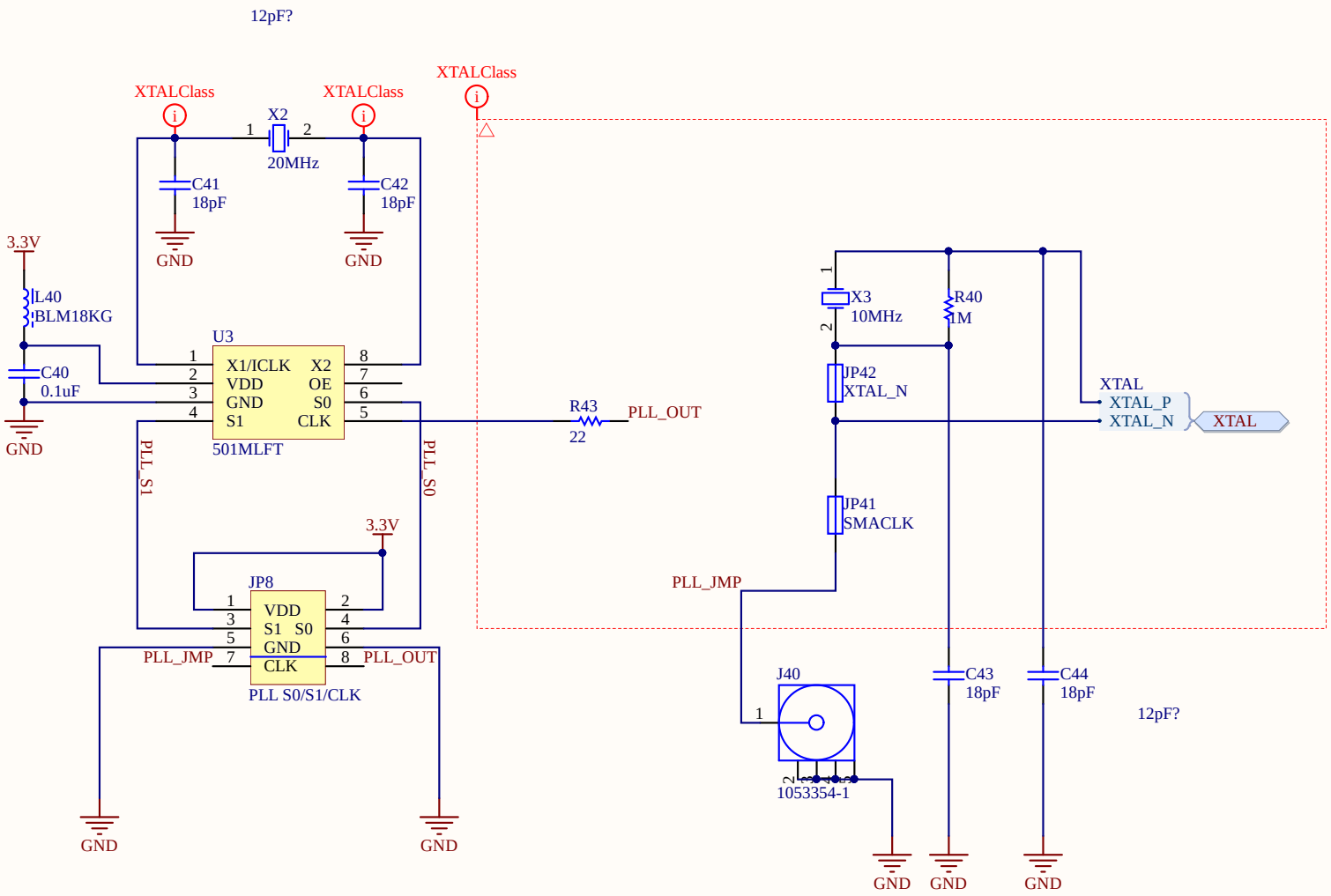

Title	PEB1-VA416XX-CORE	
Size: A	Number: VA416-EVK-B2	Revision: 0.1
Date: 11/15/2019		Sheet 7 of 9
File: C:\svn\..\core_pll.SchDoc		Drawn By: DWM

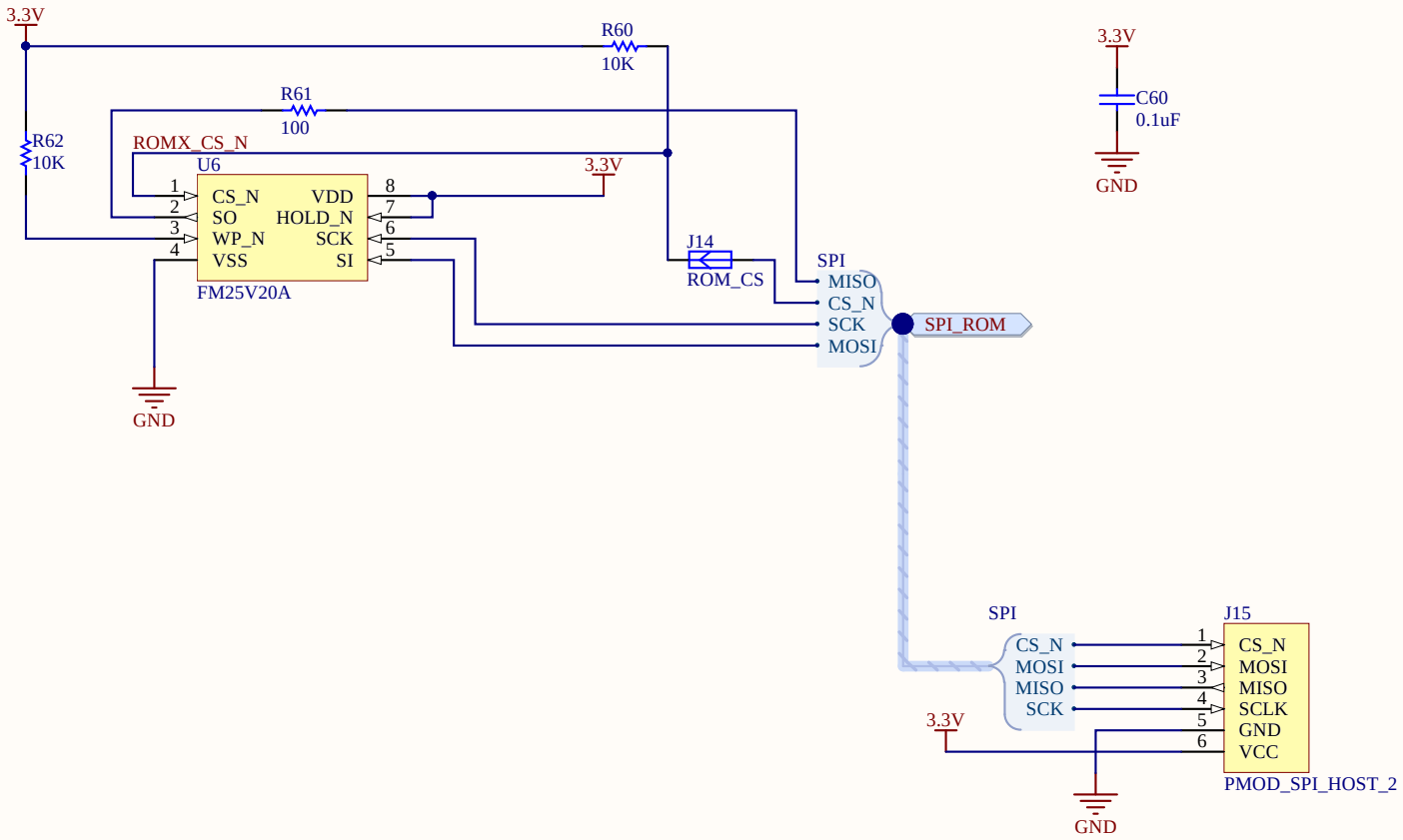

Title	PEB1-VA416XX-CORE	
Size: A	Number: VA416-EVK-B2	Revision: 0.1
Date: 11/15/2019		Sheet 8 of 9
File: C:\svn\..\core_fram.SchDoc		Drawn By: DWM

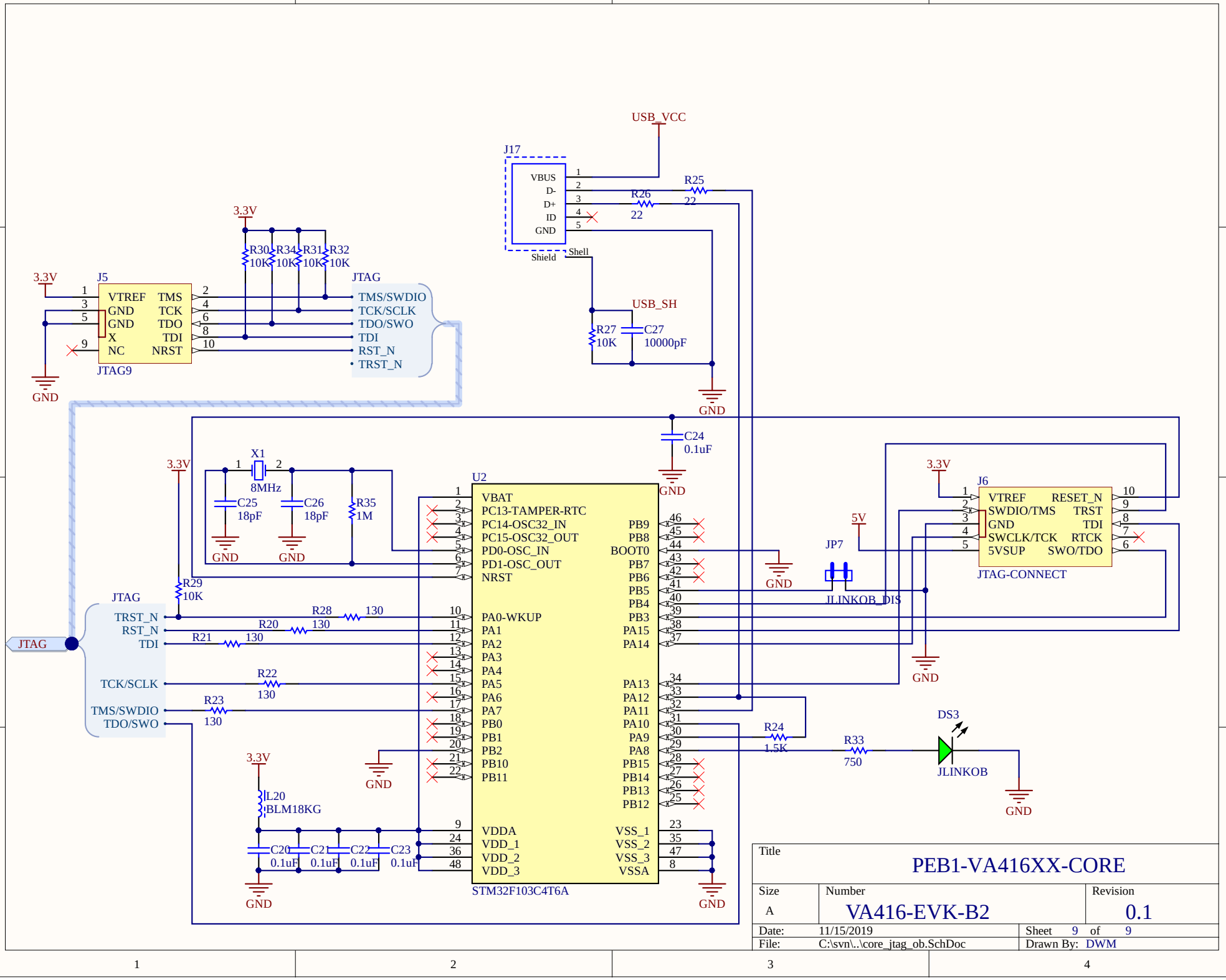

Title	PEB1-VA416XX-CORE	
Size: A	Number: VA416-EVK-B2	Revision: 0.1
Date: 11/15/2019	Sheet 9 of 9	
File: C:\svn\..\core_jtag_ob.SchDoc	Drawn By: DWM	

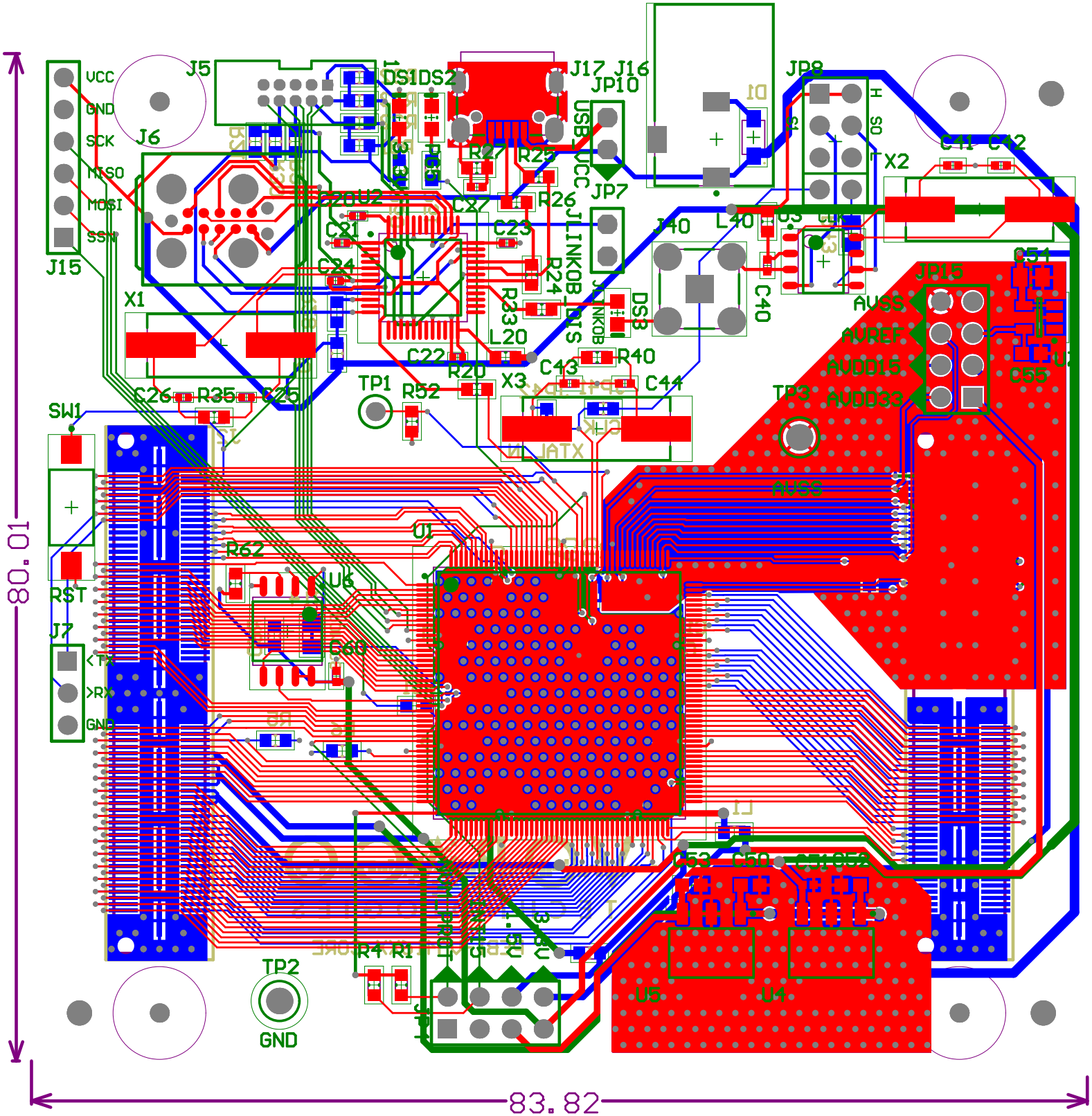

VCC
GND
SCK
MISO
MOSI
SSN
J15
J5
J6
DS1
DS2
J17
J16
JP10
JP8
X2
C41
C42
R27
R25
R26
JP7
C27
C23
C21
C24
J40
L40
C40
X1
R24
R33
L20
C22
R20
X3
C43
R40
C44
DS3
C26
R35
C25
TP1
R52
SW1
RST
J7
<TX
>RX
GND
R62
U6
U1
C60
JP15
AVSS
AVREF
AVDD15
AVDD33
C51
C55
TP3
AVSS
L1
C53
C50
C52
R4
R1
TP2
GND
U5
U4
80.01
83.82

Comment	FootprintDescripti	Description	Designator	Footprint	LibRef	Quantity
0.1uF			C1, C2, C3, C4, C5, C	CAPC0402(1005)60_L	CAP	21
0.1uF			C15, C40, C51, C60	CAPC0402(1005)60_N	CAP	4
18pF			C25, C26	CAPC0402(1005)60_L	CAP	2
10000pF			C27	CAPC0402(1005)60_N	CAP	1
18pF			C41, C42, C43, C44	CAPC0402(1005)60_N	CAP	4
1uF			C50, C52, C53, C55	CAPC0603(1608)100_	CAP	4
4.7uF			C54	CAPC0805(2012)100_	CAP	1
5WV Trans UNI		?	D1	SOD123fl-M	ZENER	1
3.3V			DS1	LEDGREEN0603_M	LED-green	1
PG5			DS2	LEDGREEN0603_M	LED-green	1
JLINKOB			DS3	LEDGREEN0603_M	LED-green	1
QSH-060			J1, J2	QSH-060-01-X-D-A	QSH-060	2
JTAG9			J5	JTAG-9_SAMTEC_0.0	JTAG9	1
UART0			J7	UART	UART	1
PMOD_SPI_HOST_2			J15	PMOD_SPI_HOST_2	PMOD_SPI_HOST_2	1
PJ-102B		Through Hole Right A	J16	CUI-PJ-102B_V	CMP-2000-06900-1	1
629105150521		Micro USB 2.0 Type B	J17	629105150521	CMP-1502-03252-1	1
JmpDir_2x4			JP4	JMPDIR_2x4	JmpDir_2x4	1
JLINKOB_DIS			JP7	JMP2	Jumper_2p	1
PLL S0/S1/CLK			JP8	PLL S0/S1/CLK	PLL S0/S1/CLK	1
USB_VCC			JP10	JMP_DIR	Jumper_2p	1
PWRJ			JP15	JMPDIR_2x4	JmpDir_2x4	1
BLM18KG			L1, L2, L20, L40	RESC0603(1608)_N	BLM18KG	4
10K			R1, R2, R3, R4, R5, R	RESC0603(1608)_N	RESISTOR	16
130			R20, R21, R22, R23, F	RESC0603(1608)_N	RESISTOR	5
1.5K			R24	RESC0603(1608)_N	RESISTOR	1
22			R25, R26	RESC0603(1608)_N	RESISTOR	2
750			R33, R50, R51	RESC0603(1608)_N	RESISTOR	3
1M			R35, R40	RESC0603(1608)_N	RESISTOR	2
22			R43	RESC0805(2012)_N	RESISTOR	1
100			R61	RESC0603(1608)_N	RESISTOR	1
RST		FSMSM Push Button S	SW1	TECO-FSMSMTR_V	CMP-2000-07501-1	1
GND		Test Point, Black, Thr	TP2	KSTN-5011_V	CMP-1672-00003-4	1
AVSS		Test Point, Black, Thr	TP3	KSTN-5011_V	CMP-1672-00003-4	1
va416xx_ports			U1	PQFP176_IC51-1764-	va416xx_ports	1
STM32F103C4T6A		Imported	U2	QFP-48_N	STM32F103C4T6A	1
501MLFT			U3	SOIC8_150_L	501MLFT	1
UA78M33			U4	SOT223-4_N	UA78M33	1
MCP1703-1502			U5	SOT223-4_N	MCP1703-1502E/DB	1
FM25V20A			U6	MAXM-W8+2_N	FM25V20A	1
LM4132AMF-3.3		Precision Low Dropou	U7	MF05A_M	CMP-0074-00541-2	1
8MHz			X1	HC-49S_US-SM	XTAL	1
20MHz			X2	HC-49S_US-SM	XTAL	1
10MHz			X3	HC-49S_US-SM	XTAL	1