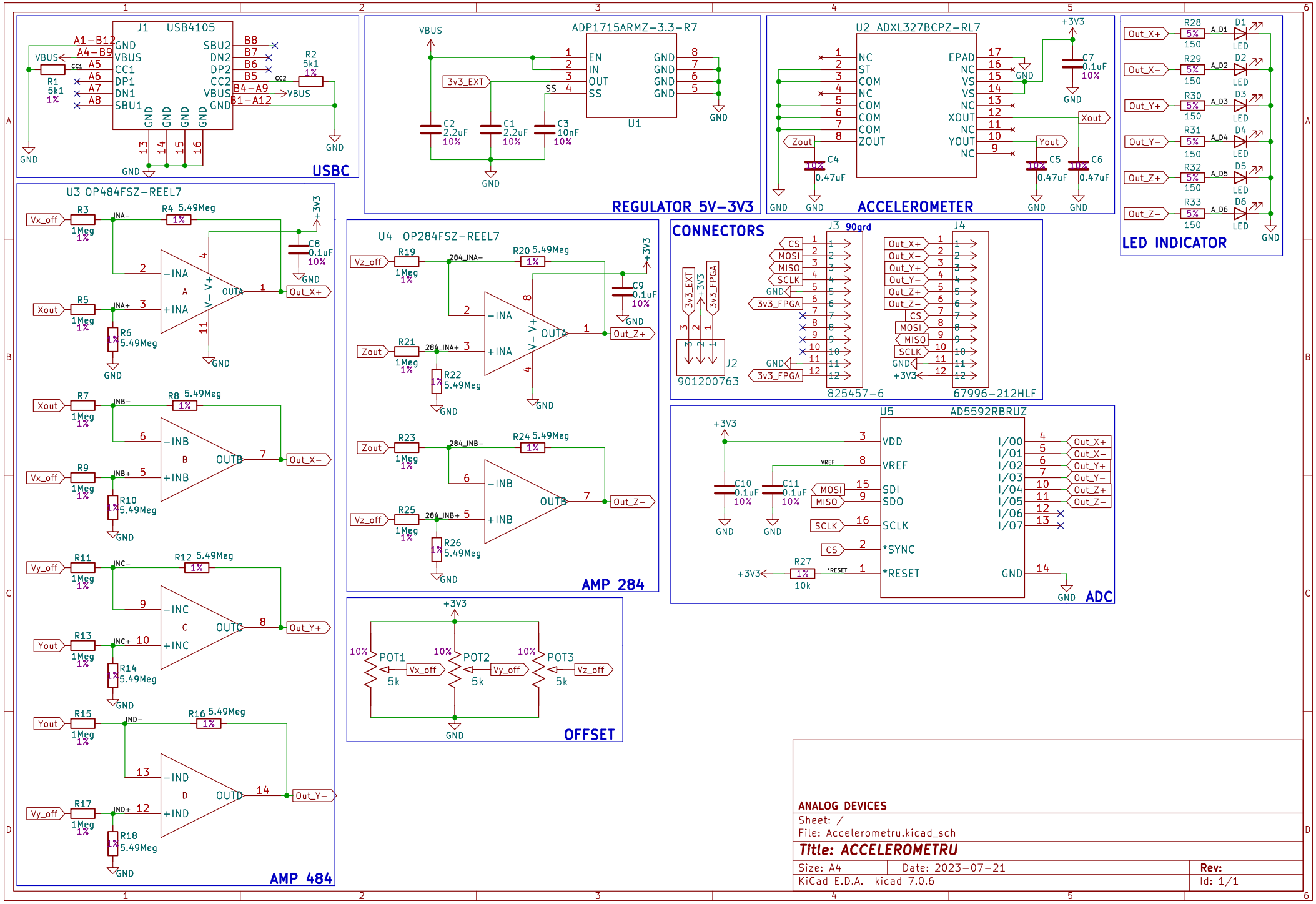
USBC
J1 USB4105
R1 5k1 1%
R2 5k1 1%
REGULATOR 5V-3V3
ADP1715ARMZ-3.3-R7
U1
C1 2.2uF 10%
C2 2.2uF 10%
C3 10nF 10%
ACCELEROMETER
U2 ADXL327BCPZ-RL7
C4 0.47uF
C5 0.47uF
C6 0.47uF
C7 0.1uF 10%
LED INDICATOR
AMP 484
U3 OP484FSZ-REEL7
AMP 284
U4 OP284FSZ-REEL7
C8 0.1uF 10%
C9 0.1uF 10%
CONNECTORS
J2 901200763
J3 90grd 825457-6
J4 67996-212HLF
ADC
U5 AD5592RBRUZ
C10 0.1uF 10%
C11 0.1uF 10%
R27 10k
OFFSET
POT1 5k
POT2 5k
POT3 5k
ANALOG DEVICES
Sheet: /
File: Accelerometru.kicad_sch
Title: ACCELEROMETRU
Size: A4
Date: 2023-07-21
Rev:
KiCad E.D.A. kicad 7.0.6
Id: 1/1