Hubert Djuitcheu[1], Khurshid Alam[2], Andrew Sergeev[1], Florian Spinty[1], Achim Autenrieth[1], Jörg-Peter Elbers[1], and Jochen Seitz[3]

[1]Adtran Networks SE
[2]German Research Center for Artificial Intelligence (DFKI)
[3]Communication Networks Group, TU Ilmenau

April 18, 2025

Posted on 18 Apr 2025 — CC-BY 4.0 — https://doi.org/10.36227/techrxiv.174494843.36263691/v1 — e-Prints posted on TechRxiv are preliminary reports that are not peer reviewed. They should not b...

Abstract

This work evaluates and compares some relevant key performance indicators (KPI) of an opensource and commercial open radio access network (O-RAN) gNBs, deployed for industrial applications. KPIs such as latency, throughput, received signal strength indication (RSSI), reference signal received power (RSRP), and more are measured using a robot to assess the signal's quality and performance in the network. This study expands the limited research on the deployment of O-RAN in industrial settings. Furthermore, the findings can aid in deciding which type of gNB to implement in a network. Our analysis reveals significant differences in the performance metrics of both gNBs, highlighting their respective strengths and weaknesses in an industrial setting.

Performance Evaluation of Industrial O-RAN: A Comparative Analysis of gNB Providers

Hubert Djuitcheu[◇], Khurshid Alam[*], Andrew Sergeev[◇], Florian Spinty[◇], Achim Autenrieth[◇], Jörg-Peter Elbers[◇], Jochen Seitz[β]
[◇]*Adtran Networks SE,* Meiningen, Germany.
{hubert.djuitcheu, andrew.sergeev, florian.spinty, achim.autenrieth, joerg-peter.elbers}@adtran.com
[*]*German Research Center for Artificial Intelligence (DFKI),* Kaiserslautern, Germany.
khurshid.alam@dfki.de
[β]*Communication Networks Group,* TU Ilmenau, Germany.
jochen.seitz@tu-ilmenau.de

***Abstract*—This work evaluates and compares some relevant key performance indicators (KPI) of an open-source and commercial open radio access network (O-RAN) gNBs, deployed for industrial applications. KPIs such as latency, throughput, received signal strength indication (RSSI), reference signal received power (RSRP), and more are measured using a robot to assess the signal's quality and performance in the network. This study expands the limited research on the deployment of O-RAN in industrial settings. Furthermore, the findings can aid in deciding which type of gNB to implement in a network. Our analysis reveals significant differences in the performance metrics of both gNBs, highlighting their respective strengths and weaknesses in an industrial setting.**

***Index Terms*—O-RAN, industrial 5G campus network, KPI, measurement campaign**

I. Introduction

The deployment of O-RAN technology within 5G and beyond networks holds transformative potential for industrial communications and campus networks. O-RAN's promise of increased flexibility, cost effectiveness, and enhanced performance through vendor interoperability is particularly attractive in these circumstances. Despite these promises, there is a significant shortage of research based on real-world experiments applied to industrial contexts. This work aims to fill this gap by offering a comparative assessment of the KPIs of two distinct O-RAN systems deployed in an industrial environment. The scarcity of empirical studies in this area underscores the importance of our work. To our knowledge, this work is among the first to provide a comparative analysis of O-RAN KPI on different next generation NodeBs (gNBs) currently accessible, making it a valuable resource for both the industrial and academic communities.

The primary contribution of this paper lies in its comprehensive evaluation of KPIs such as latency, packet loss, jitter, throughput, and others. These metrics are critical to assess the capacity of the network to handle time-sensitive industrial applications such as precise indoor positioning, extended reality (XR), industrial automation, and robot communication. By comparing the KPI of different O-RAN gNBs, we offer insights that might guide stakeholders in decision-making for choosing O-RAN systems and deployments. This comparative analysis highlights the strengths and weaknesses of each system and proves the interoperability between hardware and software from different vendors, which is a key factor in the success of future O-RAN implementations.

Furthermore, this work seeks to bridge the gap between theoretical research and actual implementation. Although most existing literature focuses on simulated environments or controlled laboratory settings, our study incorporates data from an actual industrial deployment. This real-world perspective is crucial for understanding the practical challenges and performance characteristics of O-RAN networks in industrial scenarios.

The remainder of this paper is organized as follows. The section II reviews current research on O-RAN networks and KPIs measurement in industrial environments, highlighting the limitations of existing studies. Section III describes the network configuration, including hardware and measurement settings. Section IV presents and analyzes the collected data, comparing the KPI for both gNBs. Finally, Section V summarizes the findings and discusses the implications for future O-RAN deployment and future research directions.

II. Background and Literature Review

Since its inception in 2018, O-RAN has proven to be a promising solution to overcome the limitations of traditional radio access network (RAN) architecture while catering to the increasing demands of industrial applications. However, a thorough search of academic databases such as Google Scholar and IEEE uncovers few experimental studies evaluating O-RAN deployment and its KPI in an industrial environment. This gap highlights the importance of our research, which aims to evaluate and document the key performance metrics of an industrial O-RAN network, as well as the challenges and implications of its maintenance. Despite a significant gap in the existing literature, some contributions have been identified that provide

TABLE I: Comparison of existing O-RAN performance evaluation studies

Study	O-RAN related	Experimental study	KPI	Comparing O-RAN systems	Application contexts
[1]	✗	✓	L, R, Br	✗	factory
[2]	✓	✓	J, L, Br, aU, Ru	✗	laboratory
[3]	✓	✓	L	✗	agriculture and rural
[4]	✗	✓	Br, L, RSRP, Ru	✓	laboratory
[5]	✗	✓	L, T	✗	university campus
[6]	✓	✓	Ru(RAM/CPU), Rl	✗	laboratory
[7]	✓	✓	T, RSRP, CQI, PH, BLER, MCS	✗	university campus
[8]	✓	✓	L, Br, T, J, Pl	✗	university campus
[9]	✓	✗	-	-	-
[10]	✓	✗	-	✗	industry
[11]	✓	✓	L, T, RSSI	✓	university campus
[12]	✓	✓	RSRP, T, L	✗	Office building
[13]	✗	✓	T, L	✓	laboratory
This work	✓	✓	T, L, RSRP, SINR, J, Ec	✓	industry

***KPI Definitions: L**: latency, **R**: reliability, **Br**: bit rate, **T**: throughput, **Ru**: resource utilization, **J**: jitter, **aU**: active UEs, **Pl**: packet loss, **Rl**: resource limitation, **Ec**: energy consumption*

a foundation for various aspects of this research. We present an up-to-date list of these papers, summarizing their major contributions to O-RAN performance evaluation, highlighting the experimental environments along with the various KPIs assessed in Table I. By reviewing these studies, we acknowledge the progress made in the field, while identifying gaps that our research seeks to further investigate.

Furthermore, our research is closely related to the studies conducted in [4], [11]–[13], as they provide a comprehensive comparison of various KPIs across two open-source O-RAN systems, OpenAirInterface (OAI) and srsRAN, using different configurations and measurement scenarios. Although their findings are valuable, they may not be suitable for industrial applications due to lower throughput. Furthermore, only one of the compared O-RAN systems fully supports the CU/DU split, making direct comparisons challenging.

III. O-RAN DEPLOYMENT SETUP AT MEININGEN TERAFACTORY

The O-RAN solution deployed at the Meiningen site stands out as one of the few industrial O-RAN operational systems in Germany. This innovative setup serves as a crucial testbed and experimentation platform for both the research community and the industrial sector, enhancing and supporting the capabilities of existing industrial WiFi technology. This section provides a brief architectural overview of the testbed, which offers two distinct solutions: the first gNB using the open-source OAI [14] and the second gNB based on commercial Synergy Design 5G RAN software. This dual approach enables an optimal and objective evaluation of the various existing O-RAN solutions on the market. The hardware used for the deployment of this network is briefly described below.

A. Testbed Description

Our O-RAN deployment is divided into four sites and coverage areas. In the following, we describe only the site used to produce this work. The measurement site is a continuously changing industrial hall that measures approximately 39 m in length and 20 m in width, containing machines, robots, and other communication technologies such as industrial WiFi. We deployed and compared the KPIs of both gNBs using the same OAI 5GC [15]. The specific configurations of these gNBs, including their CPUs and connected RUs, are detailed in Table II. Each deployed RU is connected to the DU via the split fronthaul O-RAN 7.2 interface [16].

Our lab thus includes two gNBs, one 5GC, four RUs, a Syslog server to manage and monitor the network's logs, two Fronthaul switches, a Grand Master clock, a management switch, and a power over Ethernet (PoE) switch (see Table II. As part of the project, the RAN Intelligent Controller (RIC) will be installed later, but no particular interest was placed on the service management orchestration (SMO) and other components, hence their absence in this lab. The entire physical architecture and equipment layout are shown in Figure 1, and the listing and description of the types of equipment are in Table II.

TABLE II: Inventory of available hardware in O-RAN Testbed

	gNB 1	gNB 2
Deployed RU	2X FlexFi FF-RF107814	2X WNC R1220-077
Supported RU per DU	up to 2 RUs	up to 3 RUs
UE (robot)	Quectel RM520N-GL	
5G Core	OAI 5G CN	
Grand Master	Adtran OSA 5410	
Fronthaut switch	Adtran FSP150 XG418	
PoE	Netgear GS5 16Up	
Server (gNB)	OAI + Intel XRAN Lib	Intel + GENEVISIO PAC-010
CPU	Xeon® Gold 6442Y	Xeon® D-2177NT

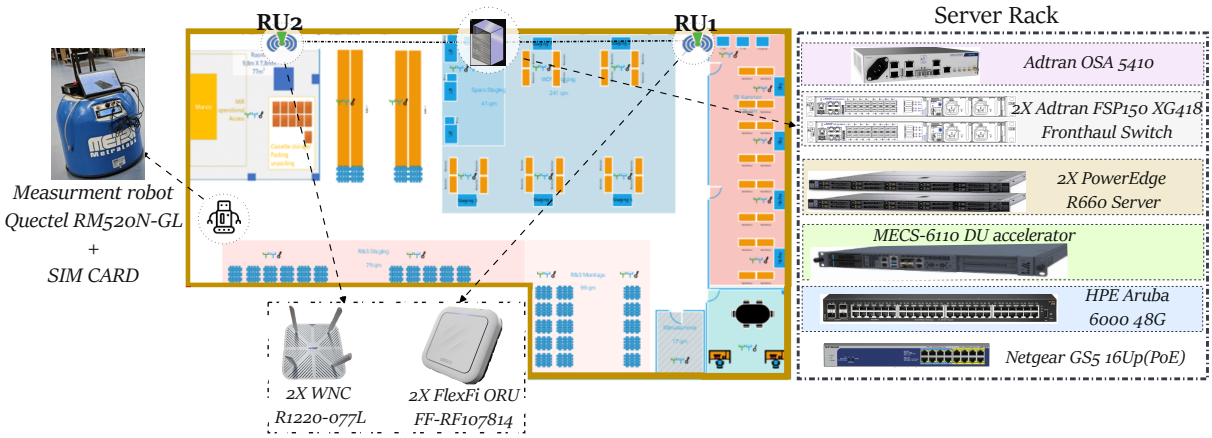

Fig. 1: Hardware infrastructure deployment at Meiningen TeraFactory

B. Setup and measurement conditions

The 6G TeraFactory project aims to leverage the advantages offered by O-RAN in an industrial environment and implement three key applications in their production chain: real-time goods tracking, autonomous transport, and extended reality (XR). To achieve this, it is crucial to focus on the network's dimensioning, installation, and deployment, without which nothing can be accomplished. In the following, we describe the process of the measurements, their configuration, and the network parameters collected.

1) Network configuration: As mentioned previously, our testbed includes an OAI 5G core network (5G core network (CN)) installed on a Dell R660 server with 24 cores and 128 GB RAM, which is connected to both the HPE Aruba 6000 48G management switch and one of the two FSP150 XG418 fronthaul switches. The OAI deployment implements the CU-DU on another Dell R660 server. This server is also connected to the HPE management switch and the previously stated fronthaul switch. The first gNB's implementation uses two FlexFI FF-RF107814 radio unit (RU)s powered by a Netgear GS5 16Up PoE switch, which is connected to the HPE management switch as well. The second gNB supports a CU-DU physical split implementation using the ADLINK MECS-6110 server with 8 cores and 64 GB RAM. This server is linked to the management switch and the second fronthaul switch, which is dedicated to the synchronization of the second solution. Two WNC R1220-077L RUs link directly to the MECS-6110's DU card. All radio units are mounted on mobile supports at a height of 3.5 meters, and are located as shown in Figure 1 and 2. The Adtran Oscilloquartz OSA 5410 device serves as the synchronization source in our testbed, receiving its signal from a GPS antenna located on the building's roof, and supplies both fronthaul switches with the Precision Time Protocol (PTP) stream and is connected to the management switch.

2) Measurement configuration: During any given measurement, only one configuration involving either the first or the second gNB is active. In this work, we do not support using both gNBs at the same time.

Fig. 2: Automated measurement mapping points

Figure 2 shows a 2D layout constructed to map the measurement room, with each measurement assigned x and y coordinates, starting at position 1 (0,0) (see Figure 2). As the measurements were performed using a robot, this mapping enables precise locations of measurement points and the robot's trajectory. The robot mapped the room during its first operation, including barriers, gates, and items (see the white points and shapes in Figure 2). The robot executes a script to measure and collect the selected KPIs, driving to the next point after each measurement. No measurements were taken during travel to the next point and data gathering could be performed live or offline, depending on the user's preferences. Initially, we collected almost 150 measurement points; however, maintaining it was challenging due to the changing environment. Therefore, 31 strategically chosen points were selected to cover the entire area consistently. Each measurement lasts roughly one minute and thirty seconds, for a total measurement time of around 1 hour and 25 minutes.

3) Measurement scenarios: This work analyzes and compares the KPIs of two O-RAN gNBs from two distinct perspectives, providing insights into their performance and efficiency.

a) ***distributed radio system (DRS) Concept:*** In this configuration, a single Distributed unit (DU) actively controls various RUs, same as the distributed antenna system (DAS), where numerous antennas are passively connected to a single DU. ***2xRU:1xDU***, where two radios share the resources of a DU and are located as shown in Figure 2. The transmission power of all antennas for all radios is set at 18 dBm.

b) ***Single Cell Concept:*** In this configuration, a radio is connected to a single DU, allowing full access to all its resources. In this scenario, the setup for both gNBs was: ***1xRU:1xDU***. To evaluate the network coverage of a single cell, two measurements with varying transmission powers were conducted for each gNB: one at a minimum power of 18 dBm and another at a maximum level of 24 dBm. In this configuration, the RU is placed near the server rack at (20.5,0) as pictured in Figure 2.

4) Evaluated KPIs: The performance criteria evaluated in this work include network coverage for both gNBs, assessing metrics such as RSRP and the Signal-to-interference-plus-noise ratio ratio (SINR). In addition, the latency and communication continuity tests using ping are evaluated. The throughput and jitter will also be evaluated, and finally the energy consumption of both gNBs will be evaluated.

IV. Results and Discussion

This section presents and discusses all results and findings of the measurement campaign. This comprehensive analysis includes a detailed examination of the collected data. We will explore different network performance metrics, highlight significant trends, and compare the outcomes between gNBs and for the given scenarios. The discussion will also address the implications of these findings, including insights into the efficacy of the approaches employed and their possible impact on future research and applications.

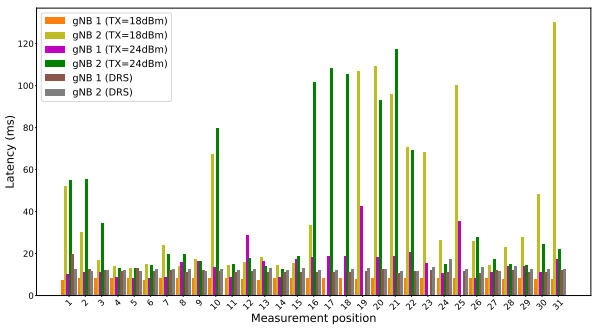

Fig. 3: Combined latency results

A. Latency, Throughput, and Jitter

To assess the quality and reliability of our industrial O-RAN network, we collect these three essential network parameters.

1) Latency: Latency measures the time it takes for a data packet to travel from the measurement robot (UE) to the network and back. To test network continuity, we used Ping to send ICMP messages and measure Round-Trip Time (RTT) latency at each point. Figure 3 shows latency results for each point and scenario. We compare latency across three levels: (i) latency between both gNBs in a single cell with TX = 18dBm, (ii) latency at all points in a single cell with TX = 24dBm, and (iii) latency for both gNBs in a DRS configuration. gNB 1 consistently showed stable latency, averaging below 15 ms, regardless of scenario or transmission power. In contrast, gNB 2 exhibited irregular latency fluctuations, particularly in single-cell scenarios, with some points showing high latency or no measurement, indicating communication issues. However, gNB 2 showed stable latency in the distributed radio configuration, indicating better network coverage.

2) Jitter: This metric assesses the network stability and could serve as a key indicator for real-time applications. Iperf was utilized as the measurement tool to capture the jitter across all measurement points. Figure 4 depicts the findings of different scenarios and configurations. Jitter values are generally low and stable across most measurement locations in a single cell with TX=18dBm, indicating consistent network performance. The highest jitter is 60 μs, which is within acceptable limits for most real-time applications. Increasing the transmission power slightly raises jitter values at points 1, 3, 7, 26, 28, and 29 for both gNBs, due to the presence in the room of many obstacles (see Figure 2), causing multiple reflections and a large number of Multipath Components (MPC)s. The DRS shows less variability overall, although points 13 and 19 (gNB2) show higher jitter. The overall fluctuations could result from multiple reasons; for instance, the dynamical network conditions due to the surrounding obstacles as well. Further network optimization needs to be made to ensure less variability of the jitter.

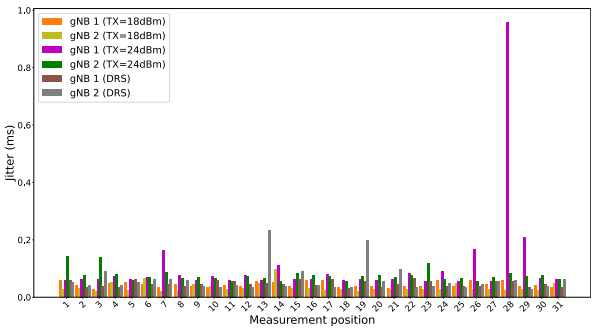

Fig. 4: Combined jitter results

3) Throughput: This parameter is a critical measure of a network's capacity and performance. Iperf was used as the network testing tool to measure the donwlink (DL) throughput, aligning the measurements with the specific requirements of our project. The results consistently showed a DL throughput of approximately 377 Mbit/s in at least at all measurement locations, regardless of the network configurations or conditions.

B. Network coverage

We investigated the quality of the radio network of both gNBs, focusing on two key metrics: the RSRP and the SINR. For each point, we assessed the strength received from the cell, which is essential to determine coverage areas and thus identify weak points in the room. SINR, on the other hand, analyzes signal quality considering both interference and noise levels, resulting in total network performance.

1) RSRP: Examining the results in Figure 5, we observe the geospatial representation of the measurement points, along with their RSRP values for both gNBs under different settings. As shown in Figure 5a, gNB1 generally exhibits weaker signal strength compared to gNB2, which maintains relatively stable RSRP values. Increasing the radio unit's transmission power improves the overall signal strength for both gNBs (see Figure 5b), with the strongest signal strength measured at Point 5 (-72dBm for gNB1 and -69dBm for gNB2). The DRS configuration presents more variability in RSRP values, gNB1 has weaker signal strength at some points but maintains reasonable values at others. In comparison, gNB2 demonstrates better signal strength at almost all points (see Figure 5c). Overall, the single cell with TX=24dBm provides the most consistent and robust network coverage, whereas the DRS configuration may require further optimization to achieve uniform coverage in the room.

2) SINR: Figure 6 presents the results of the SINR measurement for both gNB under three scenarios.

In Figure 6a gNB1 shows relatively stable SINR values ranging from 22 to 25 dB, while gNB2 presents higher SINR than gNB1, with values ranging from 22 to 36 dB. Increasing the radio transmission power negatively impacts the SINR of gNB1, causing a slight decrease compared with the previous values. gNB2 in contrast, gNB2 remains high in almost all points (see Figure 6b. Increasing the Power could increase the interference as well, which impacts the signal quality of gNB1. However, gNB2 demonstrates robust performance and better signal quality, potentially handling interferences more effectively than gNB1. Under the DRS setting (Figure 6c), Both gNBs show consistent SINR, with gNB2 maintaining slightly higher values overall. The single-cell configuration with TX = 18dBm provides the most stable SINR performance for gNB1, while gNB2 performs well under both single-cell settings. The DRS configuration shows consistent SINR values but may require further optimization to achieve higher performance.

C. Power Efficiency

Comparing the power consumption of both components is a complex task, as each component being compared may not represent the best available option at the time of this comparison. We calculated the CPU power consumption also kwon as Thermal Design Power (TDP) for each gNB ($\mathrm{TDP}_{\mathrm{gNB1}}$ and $\mathrm{TDP}_{\mathrm{gNB2}}$) to evaluate their total power consumption under the maximum theoretical load. Additionally, we calculated the power consumption ratio $\mathrm{TDR}_{\mathrm{cu}}$ of the current Hardware version as well as for the next generation gNB card $\mathrm{TDR}_{\mathrm{ng}}$, to compare and understand the efficiency and relative power consumption of both gNBs.

$$\mathrm{TDP}_{\mathrm{gNB}} = \mathrm{Cores}_{(\mathrm{gNB})} \times \mathrm{TDP}_{(\mathrm{Core})} + \mathrm{AcceleratorTDP}_{(\mathrm{RU})} \tag{1}$$

$$\mathrm{TDR}_{\mathrm{Ratio}} = \frac{\mathrm{TDP}_{(\mathrm{gNB1})} - \mathrm{TDP}_{(\mathrm{gNB2})}}{\mathrm{TDP}_{(\mathrm{gNB1})}} \tag{2}$$

Table III presents the most important components for calculating TDP and TDR. According to the TDR calculation, gNB2 is **21%** more efficient than gNB1 in the current hardware version. while examining the next-generation gNB card (see Table IV), we observe improvements in both gNB specifications. There is a decrease in the efficiency of gNB2 relative to gNB1, with $\mathrm{TDR}_{\mathrm{ng}}$ showing an **11%**efficiency.

TABLE III: Current gNB power consumption

	Cores per gNB	TDP per core (W)	Accelerator TDP per RU	**TDP per gNB (W)**
gNB1	9	9.38	4.125	**88.5**
gNB2	6	7.5	25	**70**

TABLE IV: Next generation gNB power consumption

	Cores per gNB	TDP per core (W)	Accelerator TDP per RU	**TDP per gNB (W)**
gNB1	9	7.03	4.125	**67.41**
gNB2	6	5.85	25	**60.1**

V. Conclusion and Future Directions

This work compares the KPIs of a commercial gNB with an open-source gNB deployed in an industrial environment. The findings indicate strong performance for both gNBs in various configurations and scenarios. The commercial gNB generally provides better coverage (RSRP and SINR) across all measurements compared to the open-source gNB. However, open-source gNB exhibits low and consistent latency, making it ideal for time-critical applications, whereas the commercial solution shows irregular latency fluctuations. From a power consumption point of view, open-source gNB is less efficient than its commercial

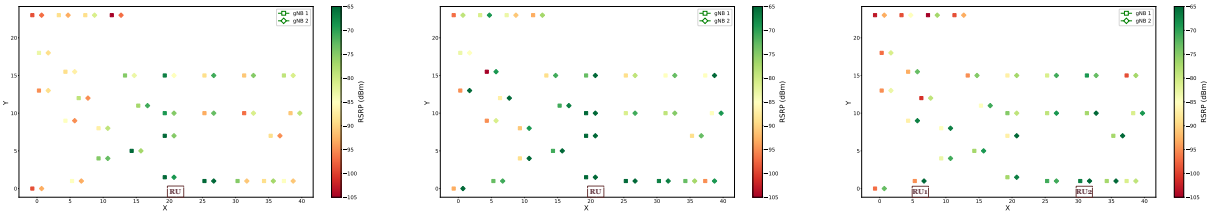

(a) Single Cell (TX = 18dBm) (b) Single Cell (TX = 24dBm) (c) DRS (TX=18dBm)

Fig. 5: RSRP results

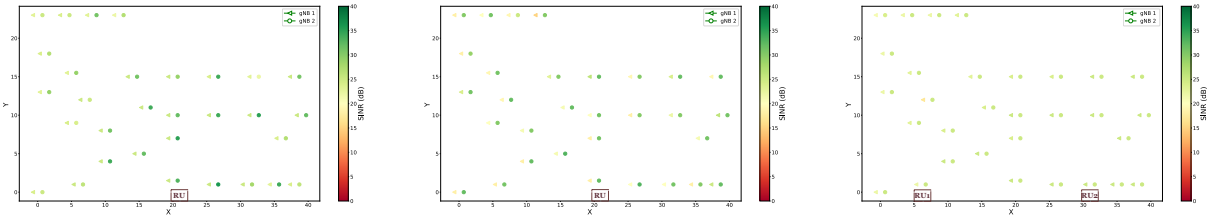

(a) Single Cell (TX = 18dBm) (b) Single Cell (TX = 24dBm) (c) DRS (TX=18dBm)

Fig. 6: SINR results

counterpart. From a configuration and maintenance perspective, the open-source solution proves superior in terms of flexibility and ease of configuration and maintenance, benefiting from continuous development and support from a large community. On the other hand, the commercial gNB functions as a closed system, resulting in less straightforward maintenance and limited opportunities for optimization. Future work could explore optimizing the capacities of the gNBs, studying resilience by employing both gNBs in a single deployment, and enhancing their security. These topics present promising avenues for further research.

Acknowledgment

This research has been partially funded by the German Federal Ministry of Education and Research (BMBF) under the project "6G-Terafactory" Grant-ID 16KISK185K.

References

[1] K. Zeng, W. Deng, R. Wang, L. Zhang, J. Cheng, T. Chen, and N. Yi, "5g network performance evaluation and deployment recommendation under factory environment," in *2021 IEEE 32nd Annual International Symposium on Personal, Indoor and Mobile Radio Communications (PIMRC)*, pp. 1370–1375, IEEE, 2021.

[2] M. Kouchaki, S. B. H. Natanzi, M. Zhang, B. Tang, and V. Marojevic, "O-RAN Performance Analyzer: Platform Design, Development, and Deployment," *IEEE Communications Magazine*, 2024.

[3] T. Zhang, J. O. Boateng, T. U. Islam, A. Ahmad, H. Zhang, and D. Qiao, "Ara-o-ran: End-to-end programmable o-ran living lab for agriculture and rural communities," in *IEEE INFOCOM 2024-IEEE Conference on Computer Communications Workshops (INFOCOM WKSHPS)*, pp. 1–6, IEEE, 2024.

[4] M. Amini and C. Rosenberg, "Performance Analysis and Comparison of Full-Fledged 5G Standalone Experimental TDD Testbeds in Single & Multi-UE Scenarios," *arXiv preprint arXiv:2407.02341*, 2024.

[5] C. Arendt, S. Fricke, S. Böcker, and C. Wietfeld, "Distributed performance evaluation of 5G and Wi-Fi for private industrial networks," in *IEEE International Symposium on Personal, Indoor, and Mobile Radio Communications (PIMRC)*, 2024.

[6] L. Gavrilovska, V. Rakovic, and D. Denkovski, "From cloud RAN to open RAN," *Wireless Personal Communications*, vol. 113, pp. 1523–1539, 2020.

[7] D. Villa, I. Khan, F. Kaltenberger, N. Hedberg, R. S. da Silva, S. Maxenti, L. Bonati, A. Kelkar, C. Dick, E. Baena, *et al.*, "X5G: An Open, Programmable, Multi-vendor, End-to-end, Private 5G O-RAN Testbed with NVIDIA ARC and OpenAir-Interface," *arXiv preprint arXiv:2406.15935*, 2024.

[8] H. Djuitcheu, T. Shah, M. Tammen, and H. D. Schotten, "DDoS impact assessment on 5G system performance," in *2023 IEEE Future Networks World Forum (FNWF)*, pp. 1–6, IEEE, 2023.

[9] A. S. Abdalla, P. S. Upadhyaya, V. K. Shah, and V. Marojevic, "Toward next generation open radio access networks: What o-ran can and cannot do!," *IEEE Network*, vol. 36, no. 6, pp. 206–213, 2022.

[10] T. F. Rahman, M. Zhang, and V. Marojevic, "O-RAN perspective on industrial Internet of Things: A SWOT analysis," in *2023 IEEE International Conference on Industrial Technology (ICIT)*, pp. 1–6, IEEE, 2023.

[11] M. Chepkoech, E.-R. Modroiu, J. Mwangama, M. Corici, and T. Magedanz, "Evaluation of OSS-Enabled OpenRAN Compliant 5G StandAlone Campus Networks," in *2023 International Conference on Electrical, Computer and Energy Technologies (ICECET)*, pp. 1–7, IEEE, 2023.

[12] J. E. Håkegård, H. Lundkvist, A. Rauniyar, and P. Morris, "Performance evaluation of an open source implementation of a 5G standalone platform," *IEEE Access*, vol. 12, pp. 25809–25819, 2024.

[13] R. P. Alves, J. G. A. d. S. Alves, M. R. Camelo, W. O. de Feitosa, V. F. Monteiro, F. Cavalcanti, and P. Rodrigo, "Experimental comparison of 5G SDR platforms: srsRAN x OpenAirInterface," *arXiv preprint arXiv:2406.01485*, 2024.

[14] OpenAirInterface, "Openairinterface 5g." https://gitlab.eurecom.fr/oai/openairinterface5g, 2025. Accessed: 2025-03-06.

[15] OpenAirInterface, "Oai 5g core network project." https://openairinterface.org/oai-5g-core-network-project/, 2025. Accessed: 2025-03-06.

[16] O-RAN Working Group 4 (Open Fronthaul Interfaces WG), "Control, user and synchronization plane specification," Technical Specification O-RAN.WG4.TS.CUS.0-R004-v17.01, O-RAN Alliance, 2025.