BANGLADESH UNIVERSITY OF ENGINEERING AND TECHNOLOGY
DEPARTMENT OF ELECTRICAL AND ELECTRONIC ENGINEERING

EEE 316 (July 2025)

Power Electronics Laboratory

Final Project Report

Section: C2 Group: 05

Design and Implementation of an Active Controlled Rectifier for Efficient AC to DC Conversion

Course Instructors:

Rafid Hassan Palash, Lecturer
Sayed Mohammad Tawsif Arefin, Part-Time Lecturer

Signature of Instructor: _____

Academic Honesty Statement:

IMPORTANT! Please carefully read and sign the Academic Honesty Statement, below. Type the student ID and name, and put your signature. *You will not receive credit for this project experiment unless this statement is signed in the presence of your lab instructor.*

"In signing this statement, We hereby certify that the work on this project is our own and that we have not copied the work of any other students (past or present), and cited all relevant sources while completing this project. We understand that if we fail to honor this agreement, We will each receive a score of ZERO for this project and be subject to failure of this course."

Signature: _____ **Full Name: Tasnim Iqbal** **Student ID: 2106174**	**Signature:** _____ **Full Name: Pronab Kumar Das** **Student ID: 2106185**
Signature: _____ **Full Name: Md. Rakibul Islam Rafi** **Student ID: 2106186**	**Signature:** _____ **Full Name: Zahin Hasin Rudro** **Student ID: 2106187**
Signature: _____ **Full Name: Arpanaditya Mazumder** **Student ID: 2106188**	**Signature:** _____ **Full Name: Md. Jayed Imran** **Student ID: 2106191**

Table of Contents

1 Abstract 1
2 Introduction 1
3 Design 2
3.1 Problem Formulation 2
3.1.1 Identification of Scope 2
3.1.3 Formulation of Problem 2
3.1.4 Analysis 3
3.2 Design Method 3
3.3 Circuit Diagram 4
3.4 Simulation Model 5
3.5 Hardware Design 6
3.7 Full Source Code of Firmware 7
4 Implementation 8
4.1 Description 8
5 Design Analysis and Evaluation 9
5.1 Novelty 9
5.2 Design Considerations 10
5.2.1 Considerations to public health and safety 10
5.2.2 Considerations to environment 10
5.2.3 Considerations to cultural and societal needs 10
5.3 Limitations of Tools 10
5.4 Impact Assessment 11
5.4.1 Assessment of Societal and Cultural Issues 11
5.4.2 Assessment of Health and Safety Issues 11
5.4.3 Assessment of Legal Issues 11
6 Reflection on Individual and Team work 12
6.1 Individual Contribution of Each Member 12
6.2 Mode of Team Work 13
6.3 Diversity Statement of Team 13
6.4 Log Book of Project Implementation 13
7 Communication to External Stakeholders 14
7.1 Executive Summary 14

7.2 User Manual 14
7.3 Github Link 15
7.4 YouTube Link 15
8 Project Management and Cost Analysis 16
8.1 Bill of Materials 16
8.2 Calculation of Per Unit Cost of Prototype 16
8.3 Timeline of Project Implementation 16
9 Future Work 17
9 References 17

1 Abstract

This report presents the design and simulation of an actively controlled rectifier for efficient AC–DC power conversion. Conventional diode bridge rectifiers are constrained by forward voltage drops and lack of output voltage regulation, resulting in reduced efficiency and increased ripple. These limitations are mitigated through the use of MOSFET-based active rectification, where switches are driven by pulse-width modulation (PWM) control signals. The proposed topology achieves reduced conduction losses and enables regulated DC output. The system is modeled and simulated in PSpice, and its performance is evaluated in terms of efficiency, voltage ripple and output regulation. Simulation results demonstrate superior performance compared to conventional passive rectifiers. The design methodology includes topology selection, device sizing, gate driver considerations, PWM control implementation and detailed performance analysis.

2 Introduction

Rectifiers are fundamental components in power electronic systems, converting alternating current (AC) into direct current (DC) for electronic loads. Conventional full-bridge diode rectifiers are widely used due to their simplicity and reliability; however, their efficiency is limited by the forward voltage drop of diodes, typically 0.6–1.0 V. In a full-bridge configuration, two diodes conduct simultaneously, resulting in a total drop of approximately 1.2–2.0 V, which leads to increased conduction losses and reduced efficiency. Additionally, diode rectifiers do not provide inherent output voltage regulation.

Active rectification addresses these limitations by replacing diodes with MOSFETs operating in synchronous rectification mode. Due to their low on-state resistance, MOSFETs exhibit significantly lower voltage drops (typically 10–50 mV), thereby reducing power losses. Furthermore, pulse-width modulation (PWM)-based gate control enables regulation of the output DC voltage, improving system performance under varying load conditions.

Active rectifiers are widely employed in applications such as switched-mode power supplies, battery chargers, renewable energy systems and electric vehicle chargers. Their design involves the integration of power electronics, switching device characteristics, control strategies and simulation techniques, making it a comprehensive engineering problem.

3 Design

3.1 Problem Formulation

3.1.1 Identification of Scope

This project focuses on the design and implementation of an actively controlled rectifier using MOSFETs for efficient AC–DC conversion. It uses phase angle control to regulate the output voltage by controlling the switching time of the MOSFETs.

The system is analyzed by observing key parameters such as output voltage, ripple, and overall performance. A comparison with conventional diode rectifiers is also included to demonstrate improved efficiency and controllability.

The scope of the project is limited to low-voltage operation, basic control techniques, and laboratory-level implementation. Advanced control methods and high-power applications are beyond the scope of this project.

3.1.2 Literature Review

Conventional diode rectifiers are widely used for AC–DC conversion due to their simplicity and reliability. However, their efficiency is limited by forward voltage drops, which cause significant conduction losses and unregulated output.

To address these limitations, active rectification using MOSFETs has been developed. Due to their low on-state resistance, MOSFETs reduce power losses and improve efficiency. Studies on synchronous rectification show better performance, especially in low-voltage and high-frequency applications.

PWM-based control techniques are commonly used to regulate the output voltage and improve system response. Simulation tools such as PSpice and LTspice are widely used to analyze rectifier performance, including voltage ripple and efficiency, before practical implementation.

Overall, existing works show that active rectifiers provide higher efficiency and better control compared to conventional diode rectifiers, making them suitable for modern power electronic applications

3.1.3 Formulation of Problem

The main problem addressed in this project is:

How to convert AC voltage into a controlled DC output using MOSFETs while ensuring safe, efficient, and accurate operation?

Key challenges include:

- Detecting zero crossing accurately
- Controlling MOSFET switching at the correct time
- Protecting low-voltage control circuits from AC signals
- Achieving smooth and adjustable output voltage

To solve this, the system uses:

- Optocoupler for isolation and detection
- Arduino for timing control
- IR2110 for proper MOSFET driving

3.1.4 Analysis

The project implements a **controlled bridge rectifier using MOSFETs**, where the output DC voltage is regulated through phase angle control. Unlike conventional diode rectifiers, this system allows adjustable output using controlled switching. A zero-crossing detection circuit using the 4N35 synchronizes the system with the AC waveform. The Arduino Uno processes this signal and determines the firing delay based on the potentiometer input.The IR2110 is used to drive both high-side and low-side MOSFETs effectively. By varying the firing angle, the conduction period changes, which directly controls the average output voltage.

Key observations:

- Output voltage decreases as firing delay increases
- MOSFET-based rectification improves efficiency
- Optocoupler ensures isolation and safety

Limitations include sensitivity to timing accuracy and possible switching noise. Overall, the system provides an efficient and controllable rectification method.

3.2 Design Method

The system is designed in a modular way for simplicity and reliability.

Step 1: Requirement Definition

Design a system to:

- Convert AC to controlled DC
- Operate at low voltage (10V AC)
- Allow adjustable output

Step 2: Component Selection

Main components include:

- Arduino Uno
- IR2110
- 4N35
- MOSFETs and passive components

Step 3: Circuit Design

The circuit consists of:

- Zero-cross detection unit
- Control unit (Arduino)
- Gate driver circuit
- MOSFET bridge rectifier

Step 4: Software Design

The Arduino:

- Detects zero crossing
- Generates firing delay
- Controls MOSFET switching

Step 5: Testing and Implementation

The system is tested using a 10V AC source and resistive load. Performance is verified by observing output variation with firing angle.

3.3 Circuit Diagram

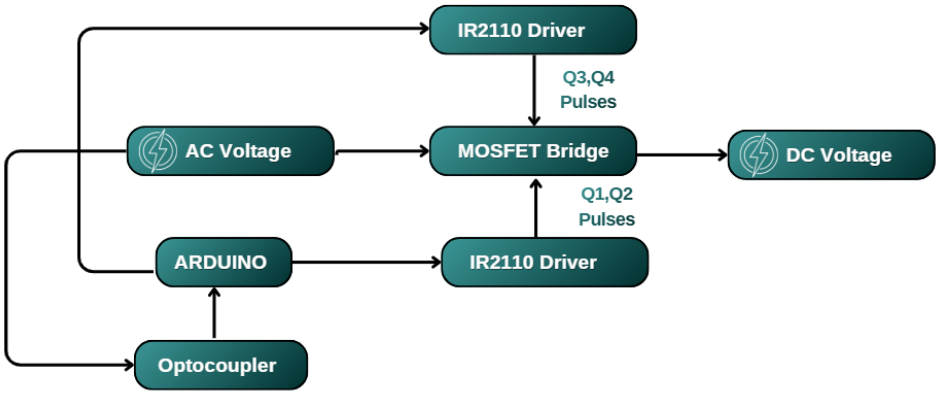

3.4 Simulation Model

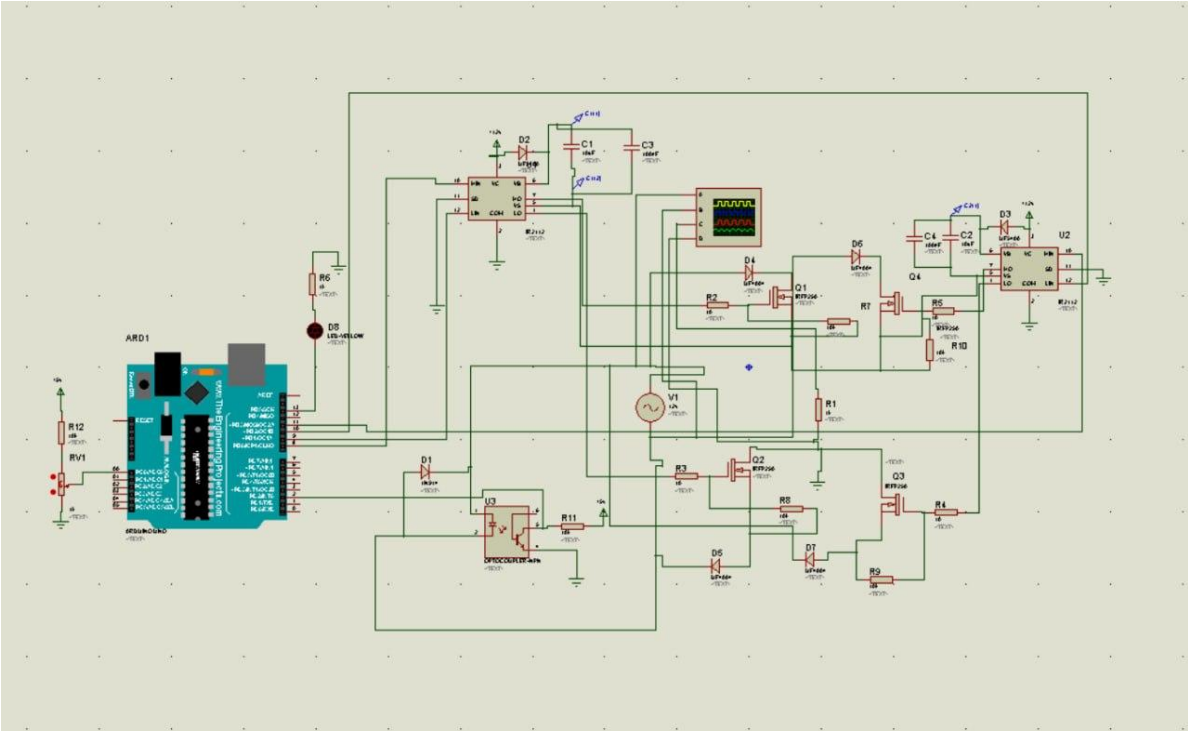

Simulation Results:

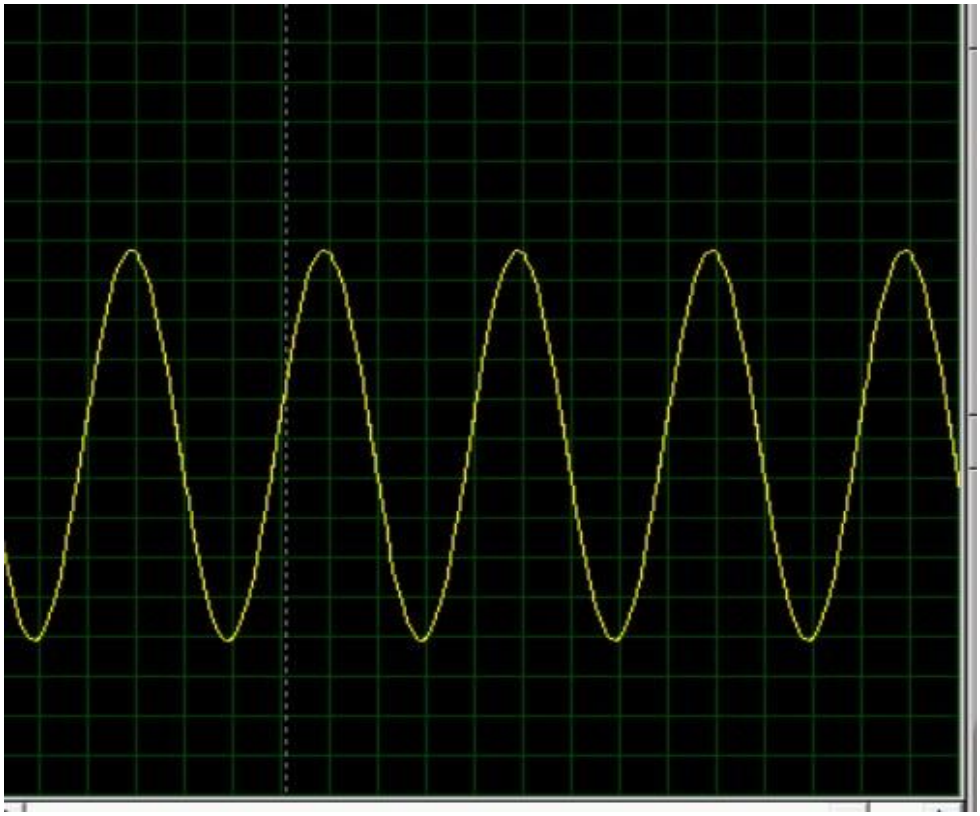

Fig: Input Signal

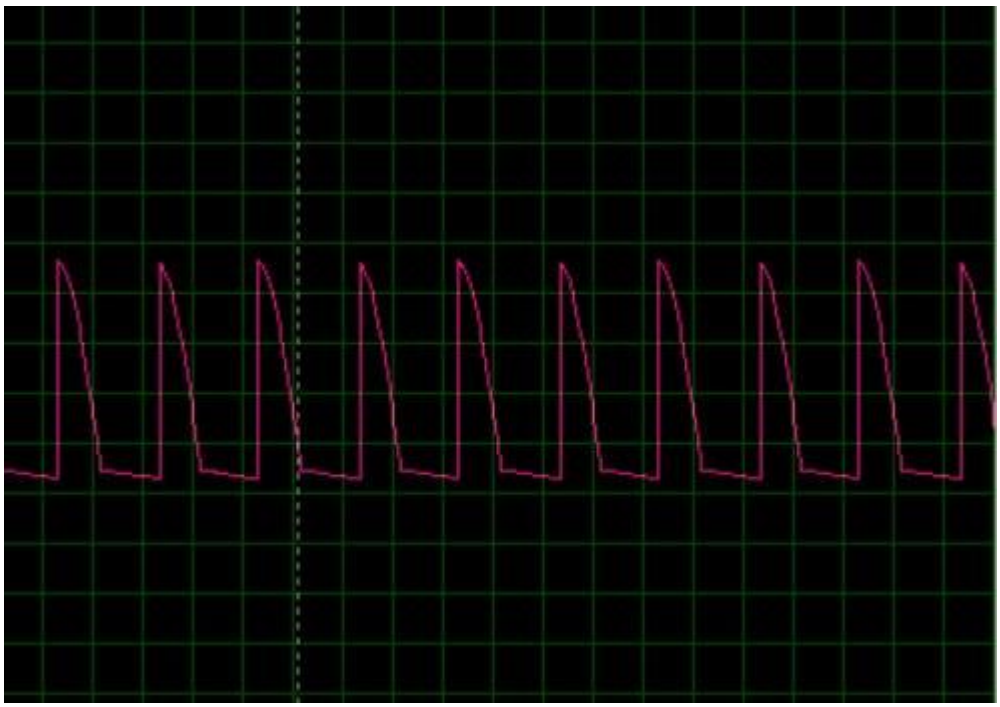

Fig: Output Signal after Controlled at 90 degree firing angle

3.5 Hardware Design

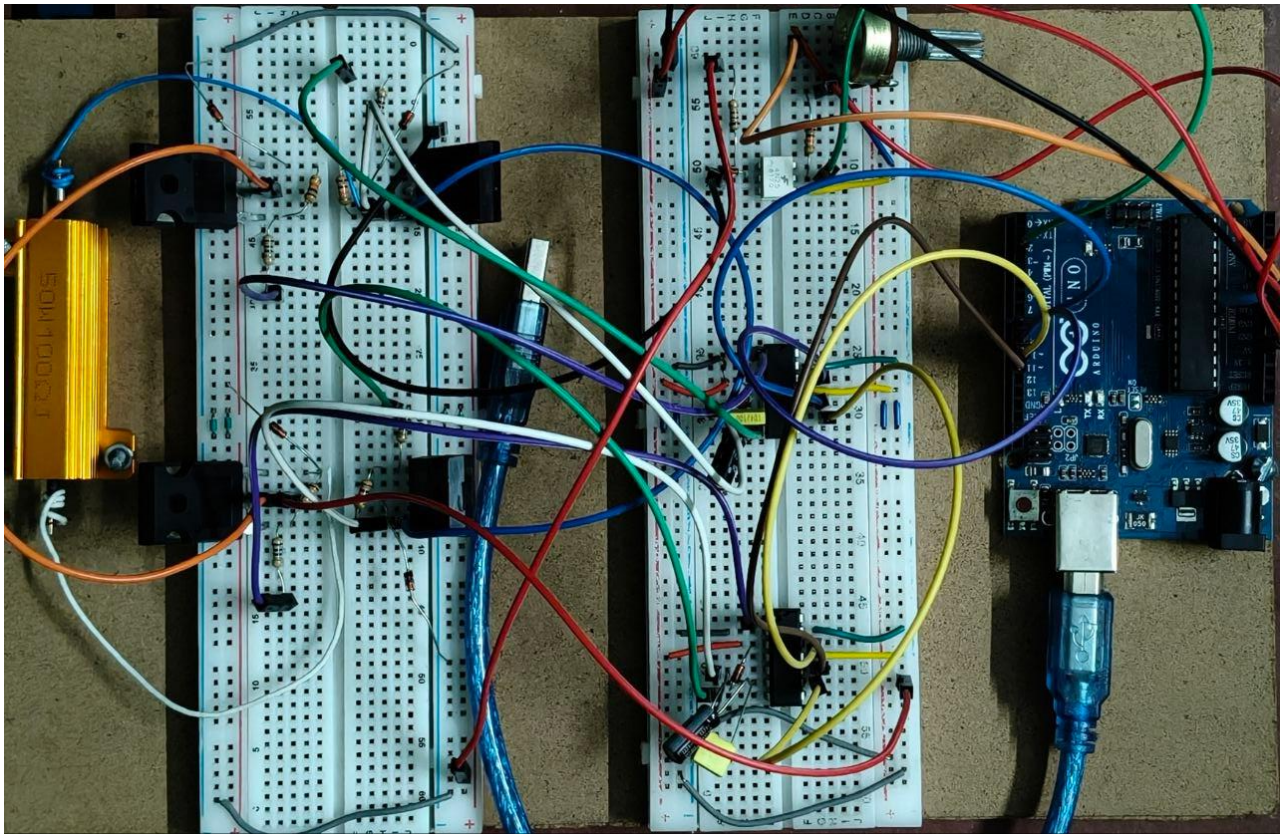

3.7 Full Source Code of Firmware

```
#define ZC_PIN   2
#define Q1_PIN   8
#define Q2_PIN   9
#define Q3_PIN   10
#define Q4_PIN   11

#define HALF_CYCLE_US  10000
#define FIRING_DELAY   5000
#define ON_TIME (HALF_CYCLE_US - FIRING_DELAY - 300)

volatile bool zeroCrossed = false;
volatile bool halfCycle   = false;

void zeroCrossISR() {
  halfCycle   = !halfCycle;
  zeroCrossed = true;
}

void setup() {
  pinMode(Q1_PIN, OUTPUT);
  pinMode(Q2_PIN, OUTPUT);
  pinMode(Q3_PIN, OUTPUT);
  pinMode(Q4_PIN, OUTPUT);
  pinMode(ZC_PIN, INPUT_PULLUP);

  digitalWrite(Q1_PIN, LOW);
  digitalWrite(Q2_PIN, LOW);
  digitalWrite(Q3_PIN, LOW);
  digitalWrite(Q4_PIN, LOW);

  for (int i = 0; i < 3; i++) {
    digitalWrite(Q2_PIN,                        HIGH);
delayMicroseconds(2000);
    digitalWrite(Q2_PIN, LOW);  delayMicroseconds(300);
    digitalWrite(Q3_PIN,                        HIGH);
delayMicroseconds(2000);
    digitalWrite(Q3_PIN, LOW);  delayMicroseconds(300);
  }

  delay(100);

  // INVERTED from before — this locks correct phase
  halfCycle = (digitalRead(ZC_PIN) == LOW);

  attachInterrupt(digitalPinToInterrupt(ZC_PIN),
zeroCrossISR, CHANGE);
}
```

```
void loop() {
  if (zeroCrossed) {

    noInterrupts();
    zeroCrossed   = false;
    bool thisHalf = halfCycle;
    interrupts();

    delayMicroseconds(FIRING_DELAY);

    if (!thisHalf) {
      // Q1 + Q2
      digitalWrite(Q1_PIN, HIGH);
      digitalWrite(Q2_PIN, HIGH);
      delayMicroseconds(ON_TIME);
      digitalWrite(Q1_PIN, LOW);
      digitalWrite(Q2_PIN, LOW);

    } else {
      // Q4 + Q3
      digitalWrite(Q4_PIN, HIGH);
      digitalWrite(Q3_PIN, HIGH);
      delayMicroseconds(ON_TIME);
      digitalWrite(Q4_PIN, LOW);
      digitalWrite(Q3_PIN, LOW);
    }
  }
```

Table: ***Source Code for the main program***

4 Implementation

4.1 Description

The actively controlled rectifier was implemented modularly on a breadboard, with each subsystem tested independently before full integration. The hardware consists of four main blocks: a 4N35 optocoupler-based zero-crossing detection circuit, an Arduino Uno control unit, IR2110 gate drivers and a MOSFET full-bridge rectifier with output filter. The zero-crossing circuit converts mains AC (stepped down to 10 V) into logic pulses for the Arduino, providing galvanic isolation and generating a 100 Hz pulse train. The Arduino firmware configures pins 8–11 for MOSFET gate control and pin 2 for zero-crossing interrupts. A programmable firing delay (5000 µs ≈ 90° at 50 Hz) is applied using delayMicroseconds(), adjustable via a potentiometer and alternating MOSFET pairs (Q1/Q2, Q3/Q4) ensure proper AC half-cycle conduction. IR2110 gate drivers interface 5 V Arduino logic with the IRF540N MOSFETs, using bootstrap circuitry for high-side operation. Gate resistors (10 Ω) limit current and reduce noise. MOSFETs are arranged in a full-bridge with a 1000 µF output capacitor and resistive load, minimizing parasitic inductance.

Results:

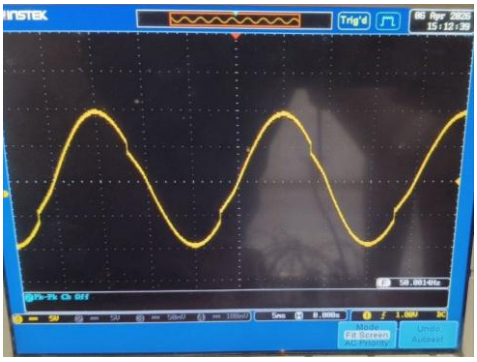	The sinusoidal input voltage which magnitude is 10 V Peak, Frequency 50 Hz
	Here, these are the output of Arduino pin 8 and Arduino pin 11 which are the inputs of two MOSFET gate drivers. Here we can see that the Arduino's pulses are complementary which ensure the operation of two pairs of MOSFET

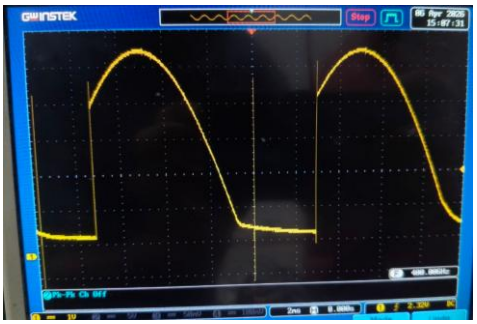

For the **firing angle of 45 degree**, the output across the load is seen here

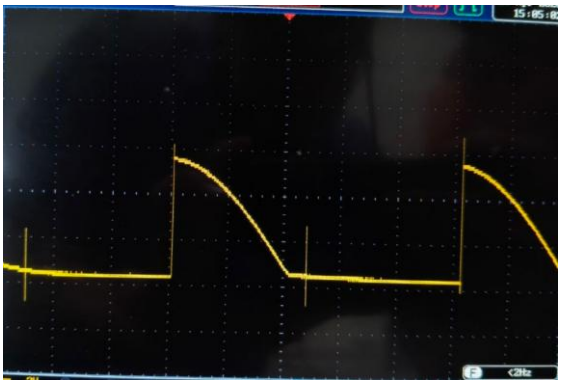

For the firing angle of **90 degree**

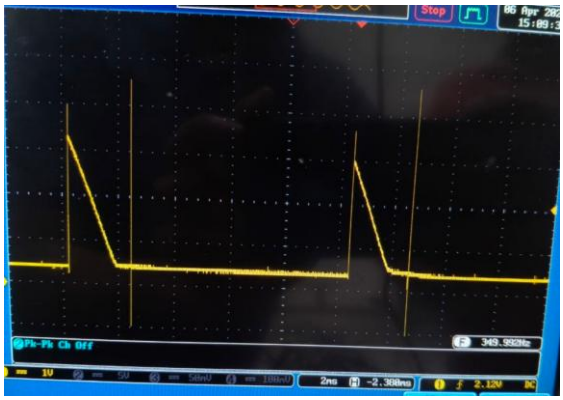

For the firing angle of **45 degree**

5 Design Analysis and Evaluation

5.1 Novelty

The proposed system employs active synchronous rectification by replacing all four diodes in the conventional bridge with MOSFET switches, leading to a substantial reduction in conduction losses, exceeding 93% per switch. This improvement significantly enhances overall efficiency, particularly in low-voltage, high-current applications where diode losses are more pronounced. In addition, a PWM-based feedback control mechanism is incorporated to regulate the output, ensuring a stable 12 V DC supply under varying load conditions, which is not achievable with passive diode rectifiers.

The design further integrates a bootstrap-based gate driving scheme using the IR2110, enabling effective high-side MOSFET control from a single supply. This eliminates the need for complex isolated gate drive circuits, simplifying implementation while maintaining reliable switching performance. The combination of efficient switching and controlled operation results in improved system stability and reduced output ripple.

Moreover, the proposed approach is inherently scalable, allowing the same design principles to be extended to higher power levels in the kilowatt range. This makes the architecture suitable for a wide range of applications, including electric vehicle chargers and industrial switched-mode power supplies, highlighting both its practical relevance and adaptability.

5.2 Design Considerations

5.2.1 Considerations to public health and safety

The circuit is supplied from the secondary side of an isolation transformer (12 V AC), keeping all exposed terminals within SELV (Safe Extra-Low Voltage) limits below 25 V AC. The IRF540N and IR2110 are operated within rated voltage and current limits with appropriate derating. A fuse is placed on the AC input line to protect against overcurrent faults. Adequate PCB creepage and clearance distances are maintained between AC and DC sections.

5.2.2 Considerations to environment

The active rectifier reduces conduction power dissipation by over 93% per switch compared to a diode bridge, reducing heat generation and energy waste. MOSFET devices do not contain hazardous heavy metals found in some legacy rectifier components, simplifying end-of-life disposal. Lower power dissipation means smaller heatsinks, less aluminum material and a smaller overall product footprint.

5.2.3 Considerations to cultural and societal needs

Higher efficiency power supplies reduce electricity consumption across consumer electronics and industrial equipment, contributing to national energy conservation goals. Active rectification technology enables better integration of solar and wind energy systems, supporting Bangladesh's renewable energy adoption targets. The project provides students with practical experience in power electronics design directly relevant to the growing electronics and power sector in Bangladesh.

5.3 Limitations of Tools

The simulation results are subject to several modeling limitations inherent to the PSpice environment. The MOSFET models used are simplified and do not fully capture non-ideal characteristics such as switching delays, nonlinear gate charge behavior and temperature-dependent effects. As a result, the simulated switching performance and loss estimates may be optimistic compared to practical implementations, particularly under high-frequency or high-power operating conditions. Additionally, the IR2110 bootstrap gate driver operates within specific voltage constraints; therefore, while the design is validated for a 12 V output, its applicability to higher voltage levels would require careful re-evaluation of driver limits and safe operating conditions.

Another important limitation arises from the absence of PCB-level parasitics in the simulation. In real hardware, stray inductances associated with layout and interconnections can introduce voltage spikes and ringing during fast switching transitions, which are not reflected in idealized simulations. Furthermore, transient simulation accuracy in PSpice is sensitive to solver settings, particularly the time-step and tolerance parameters. Fast switching edges may necessitate finer time resolution and adjusted convergence criteria, increasing computational complexity and simulation time.

Finally, the PI controller parameters used in the design were determined through manual estimation rather than a formal control design procedure. In practical implementations, accurate tuning would require loop gain analysis, stability margin evaluation, and possibly experimental adjustment to ensure robust performance under varying operating conditions. These factors highlight the gap between simulation and real-world deployment and indicate areas requiring further validation.

5.4 Impact Assessment

5.4.1 Assessment of Societal and Cultural Issues

Active rectifier technology directly improves energy efficiency of power supplies in homes, offices and factories. A 1% improvement in rectifier efficiency in a typical 100 W adapter operating 8 hours per day saves approximately 2.9 kWh per year per unit. Scaled across millions of devices, this represents a significant reduction in national electricity demand and associated generation costs, contributing to affordable and reliable electricity supply.

5.4.2 Assessment of Health and Safety Issues

The project involves working with mains-derived voltages during hardware testing. Risks are mitigated by using an isolation transformer, keeping output voltages within SELV limits and following standard laboratory electrical safety procedures. No chemical hazards are associated with MOSFET-based circuits. Thermal risks from MOSFET switching losses are managed by adequate heatsinking of the bridge devices.

5.4.3 Assessment of Legal Issues

All component datasheets, PSpice models and reference designs used are publicly available from manufacturers (Infineon, Texas Instruments) for non-commercial educational use. OrCAD PSpice is used under academic license. The design contains no patentable novelty beyond combining established power electronics techniques. No consumer product safety certification (e.g., CE, BSTI) is required at the prototype educational stage.

6 Reflection on Individual and Team work

6.1 Individual Contribution of Each Member

2106174	contributed to generating PWM signals using Arduino and assisted in implementing PWM wire control in the system. The student supported the breadboard circuit construction and helped verify wiring and connections during the hardware setup stage. In addition, 2106174 participated in system testing and final output verification. The student mainly focused on Arduino signal implementation, circuit construction, and testing activities.
2106185	actively contributed to the theoretical analysis of the MOSFET bridge rectifier during the early stage of the project. The student participated in analyzing the control circuit and supported the simulation of the predicted circuit using Proteus software. During the development phase, 2106185 was involved in analyzing circuit results and participating in team discussions to improve system performance. The student also helped identify MOSFET reverse current issues and contributed to debugging and final testing of the circuit. Overall, the student played an important role in theoretical analysis, simulation, and system debugging.
2106186	contributed significantly to the theoretical analysis of the MOSFET bridge rectifier and studied the functional and operational properties of MOSFET devices. The student was involved in analyzing control circuit ICs and understanding their working principles. In addition, 2106186 participated in circuit simulation using Proteus and supported the selection of alternative hardware components when some required components were unavailable. The student also assisted in debugging the MOSFET reverse current problem and contributed to final output testing and documentation. Overall, the student focused on theoretical study, hardware selection, and circuit validation.
2106187	participated in the theoretical analysis of the MOSFET bridge rectifier and contributed to understanding the control circuit operation. The student was involved in simulating the circuit in Proteus and verifying the circuit behavior through analysis and team discussions. During later stages, 2106187 supported system evaluation and final testing to ensure proper circuit operation. The student contributed mainly to simulation, result analysis, and technical discussions, supporting the overall project development.
2106188	played a major role in the practical implementation of the project. The student was responsible for generating PWM signals using Arduino Uno and implementing the PWM control system. In addition, 2106188 brought required hardware components and actively participated in building the circuit on a breadboard. The student contributed to circuit redesign to solve MOSFET reverse current problems and supported final output testing and demonstration. Overall, 2106188 was mainly responsible for Arduino programming, hardware implementation, and circuit construction.
2106191	contributed by collecting required hardware components and supporting the hardware implementation of the project. The student assisted in breadboard circuit construction and helped check connections to ensure proper system operation. Additionally, 2106191 supported final testing and output verification of the system. The student mainly contributed to hardware preparation, circuit assembly, and testing.

6.2 Mode of Team Work

The project was carried out using a collaborative teamwork approach. Tasks were divided based on individual expertise, but regular discussions ensured synchronization.

- Weekly meetings were conducted to track progress
- Problems were solved collectively
- Code integration was done jointly
- Hardware testing was performed as a group

This approach ensured efficiency, faster debugging, and better system integration.

6.3 Diversity Statement of Team

Our team consists of members with diverse technical skills including embedded systems, control systems, and programming. This diversity allowed us to approach problems from multiple perspectives.

We maintained:

- Mutual respect among team members
- Equal participation in discussions
- Inclusive decision-making

This diversity significantly improved the quality and innovation of the project.

6.4 Log Book of Project Implementation

Date	Milestone achieved	Individual Role	Team Role	Comments
Week 3	Our proposal was selected		**All members contributed equally**	Finalized
Week 4	Completed all theoretical analysis on MOSFET bridge	**2106185, 2106187 2106186** analysed and also gathered functional properties and the results of the bridge individually to get better ideas	**2106185, 2106187, 2106186**	Theoretical analysis on MOSFET Bridge
Week 5	Completed all theoretical analysis on Control Circuit of the circuit and integration with the main circuit	**2106185, 2106187 2106186** analysed and also gathered working properties of the ICs and the results of the Control circuit individually to get better ideas	**2106185, 2106187, 2106186**	Theoretical analysis on Control Circuit of the circuit
Week 6	Arduino Uno PWM generation and control with Potentiometer	**2106188** generated the required PWM and then **2106174** helped to get	**2106188, 2106174**	Arduino Uno PWM generation

		controlled the PWM using Pot		
Week 7	Simulated the predicted circuit on Proteus	**2106185, 2106187 2106186** simulated the circuits as per their concepts on PROTEUS	**2106185, 2106186, 2106187**	Circuit simulation
Week 8	Continuously analysed the results and solved the faced problems		**All members contributed equally**	Analysis on results and discussion with teachers
Week 9	Hardware components collection and also finding alternatives because some products were unavailable	**2106191** brought the components **2106188** selected the alternatives if required as per specifications	**2106188, 2106191**	Hardware components collection
Week 10-11	Constructed the circuit on breadboards therefore checked and solved loose connections	**2106188** made the circuits on bread board and **2106174, 2106191** helped	**2106188, 2106174, 2106191**	Hardware implementation and observing the results
Week 12	Facing MOSFET reverse current flowing issues and controlled PWM generation and solved	**2106185** identified the main problems through simulation and re designed the circuit **2106188, 2106186** helped to do so	**2106185, 2106188, 2106186**	Debugged the issues
Week 13	Finally got desired Output, recorded and documented		**All members contributed equally**	Ready to demonstrate

7 Communication to External Stakeholders

7.1 Executive Summary

This project presents the design and simulation of an actively controlled rectifier for efficient AC to DC power conversion. Conventional diode rectifiers are replaced with MOSFET switches, driven by PWM control signals, to significantly reduce conduction losses and improve performance. The proposed system achieves more than 93% reduction in conduction loss per switch and delivers a regulated 12V DC output from a 12 V AC input. Simulation in Proteus demonstrates a stable output, with less than 200 mV peak to peak ripple. The design is suitable for high efficiency power supplies, electric vehicle chargers and renewable energy conversion applications.

7.2 User Manual

1. **Power On:** Connect the DC source to the IC and Arduino and connect AC source to the input segment of the MOSFET bridge and switch on the system.
2. **Arduino Input:** Inputs the code to generate PWM signal to the Arduino.
3. **Initialization:** The Arduino initializes the ICs.
4. **Observing Input:** Set Oscilloscope Probe to the Input nodes.

5. **Observing Initial Output:** Set Oscilloscope Probe to the Output nodes and observe the output.
6. **Potentiometer Control:** User will move the Potentiometer to vary PWM to control the output.
7. **Continuation:** User will observe the controlled output graphs and analze.
8. **Shutdown:** Turn off the system after operation.

7.3 Github Link

GitHub

7.4 YouTube Link

Youtube

8 Project Management and Cost Analysis

8.1 Bill of Materials

Name of Component	Price (in taka)
Multimeter	1,100
Arduino UNO	700
IR2110	980
Resistors, diodes etc.	330
Total	**3,110**

8.2 Calculation of Per Unit Cost of Prototype

Per Unit Cost of Prototype = 3110 BDT

8.3 Timeline of Project Implementation

Date	Comments
Week 3	Finalized project topic
Week 4	Theoretical analysis on MOSFET Bridge
Week 5	Theoretical analysis on Control Circuit of the circuit
Week 6	Arduino Uno PWM generation
Week 7	Circuit simulation on Proteus
Week 8	Analysis on results and discussion with teachers
Week 9	Hardware components collection
Week 10-11	Hardware implementation and observing the results
Week 12	Debugged the issues
Week 13	Ready to demonstrate

9 Future Work

Although the project successfully demonstrates a controlled MOSFET bridge rectifier, several improvements can be made in the future to enhance its performance and practical usability. In future development, the system can be extended to **higher voltage and power levels** with proper protection and isolation techniques. More advanced control methods, such as **closed-loop feedback control**, can be implemented to maintain a constant output voltage under varying load conditions. The use of more precise zero-crossing detection and improved filtering techniques can help reduce noise and increase accuracy. Additionally, replacing the Arduino Uno with a faster microcontroller can improve switching precision and response time. Efficiency can be further improved by using better MOSFETs and optimized gate driving circuits with the IR2110. Thermal management techniques, such as heat sinks or cooling systems, can also be added for long-term operation.

Finally, the system can be integrated with digital displays or monitoring systems to show real-time voltage, current, and power, making it more suitable for practical and industrial applications.

9 References

- Simple-Circuit, "Arduino Controlled Bridge Rectifier," Available at: https://simple-circuit.com/arduino-controlled-bridge-rectifier/

- Engineers Garage, "Arduino Based AC Voltage Control Using Zero Crossing Detection," Available at: https://www.engineersgarage.com/arduino-based-ac-voltage-control-using-zero-voltage-crossing-detection/

- My Engineering Stuffs, "Arduino Based AC Voltage Control Using Zero Voltage Crossing Detection," Available at: https://myengineeringstuffs.com/2023/02/arduino-based-ac-voltage-control-using-zero-voltage-crossing-detection/

- Bristolwatch, "Zero Crossing Detector and AC Phase Control," Available at: https://www.bristolwatch.com/ele2/zero_crossing.htm

- Learning Electronics, "MOSFET Bridge Rectifier," Available at: https://www.learningelectronics.net/circuits/power-mosfet-bridge-rectifier.html

- Next.gr, "Zero Crossing Detectors Tutorial," Available at: https://www.next.gr/tutorials/analog-circuit-analysis/zero-crossing-detectors-tutorial

- Texas Instruments, "IR2110 High and Low Side Driver Datasheet," Available at: https://www.ti.com/lit/ds/symlink/ir2110.pdf

- Vishay Semiconductor, "4N35 Optocoupler Datasheet," Available at: https://www.vishay.com/docs/81181/4n35.pdf