European Polymer Journal 234 (2025) 114011

Contents lists available at ScienceDirect

European Polymer Journal

journal homepage: www.elsevier.com/locate/europolj

Living anionic polymerization of 2-isopropenyl-2-oxazoline in continuous flow: From efficient synthesis to hydroxyl end-functionalized polymers☆

Philipp Jung [a], Valentin Victor Jerca [b], Richard Hoogenboom [c,*], Holger Frey [a,*]

[a] Department of Chemistry, Johannes Gutenberg University Mainz, Duesbergweg 10-14, 55123 Mainz, Germany
[b] Smart Organic Materials Group, "Costin D. Nenitzescu" Institute of Organic and Supramolecular Chemistry, Romanian Academy, 202B Splaiul Independentei, 060023 Bucharest, Romania
[c] Supramolecular Chemistry Group, Centre of Macromolecular Chemistry (CMaC), Department of Organic and Macromolecular Chemistry, Ghent University, Krijgslaan 281-S4, B-9000 Ghent, Belgium

ARTICLE INFO

Keywords:
Poly(2-isopropenyl-2-oxazoline)
Anionic polymerization
Continuous flow
Telechelic polymer

ABSTRACT

Compared to conventional batch systems, flow reactors reduce the overall experimental effort for living polymerizations. Excellent heat transfer efficiency allows to safely perform exothermic reactions like anionic polymerizations in polar solvents at room temperature. By adjusting the flow rates during the reaction, a large number of samples with different molar masses can be obtained using the same setup. Herein the living anionic polymerization of 2-isopropenyl-2-oxazoline in a continuous flow system is reported, using a microstructured continuous flow reactor. Employing two different micromixers, poly(2-isopropenyl-2-oxazoline) (PiPOx) with molecular weights between 3000 g/mol (Đ = 1.20) and 18,800 g/mol (Đ = 1.9) was synthesized. The structure of the obtained polymers was confirmed by ^{1}H NMR spectroscopy and size exclusion chromatography. Additionally, end-capping experiments were performed with butylene oxide and ethylene oxide to introduce a terminal hydroxyl functionality. Successful functionalization was confirmed by ^{1}H NMR spectroscopy, and MALDI-TOF-MS. The present study not only reports an efficient method for preparing PiPOx, but also provides access to complex macromolecular architectures based on functional PiPOx, which were unattainable before by post-polymerization modification reactions such as macromonomers and comb polymers.

1. Introduction

Throughout the last decades, controlled polymerization techniques have received enormous interest, and important progress has been made in this field [1–4]. Despite the wide range of synthetic developments, carbanionic polymerization still plays a key role for industrial application [5–7]. Living carbanionic polymerization provides precise control of the molar mass, low dispersity products and high end-group fidelity. On the other hand, the method has some drawbacks as it is highly sensitive to (protic) impurities, necessitating thorough drying of all reaction vessels, and working under dry inert-gas atmosphere is mandatory [6].

Microstructured continuous flow reactors are increasingly employed in cationic, anionic and radical polymerizations [8,9]. Flow microreactor systems offer several advantages compared to traditional batch reactors [10]. A crucial advantage is the high mixing rate of microreactors. Using highly reactive monomers, as in the anionic polymerization of vinyl monomers in tetrahydrofuran (THF), polymerization is initiated immediately after mixing of the components. Therefore, it is indispensable to reach solution equilibrium in order to control the polymerization. Since the driving force of mixing is diffusion, the mixing rate depends on the square of the length of the diffusion path. Due to the low diffusion path, microreactors provide much faster and more efficient mixing than batch systems. In addition, temperature control is superior in microreactors in comparison to traditional synthesis vessels. By providing higher surface-to-volume ratios, continuous flow microreactors excel at heat dissipation, enabling rapid cooling and heating and permit to avoid hot spots. Furthermore, reaction times can be precisely controlled by residence times, enhancing selectivity in organic synthesis and improving product throughput. Finally, due to their small internal volumes, continuous flow microreactors improve safety of the operator. Because of these features, continuous flow microreactors have

☆ This article is part of a special issue entitled: 'Poly(2-oxazoline)s' published in European Polymer Journal.

* Corresponding authors.
E-mail addresses: richard.hoogenboom@ugent.be (R. Hoogenboom), hfrey@uni-mainz.de (H. Frey).

https://doi.org/10.1016/j.eurpolymj.2025.114011
Received 30 March 2025; Received in revised form 3 May 2025; Accepted 8 May 2025
Available online 9 May 2025
0014-3057/© 2025 Elsevier Ltd. All rights are reserved, including those for text and data mining, AI training, and similar technologies.

already found application in anionic polymerization of e.g. styrene [11,12], 2-vinylpyridine [12], methacrylates [5,13,14], and epoxides [9,15,16].

2-Isopropenyl-2-oxazoline (iPOx) is a versatile monomer with dual functionality. Utilizing its vinyl functionality, iPOx can be polymerized by radical [17–20], anionic [21,22], and metal-mediated group transfer polymerization [23]. In contrast, it is not possible to polymerize iPOx via cationic polymerization of the 2-oxazoline ring as this leads to substantial chain-transfer side reactions allowing only oligomerization [24]. Hence, the name poly(2-isopropenyl-2-oxazoline) (PiPOx) is commonly only used to refer to the polymer obtained via polymerization of the double bond of iPOx. The key to the versatility of PiPOx is the 2-oxazoline pendent group, which is retained in the resulting polymer, providing a platform for a variety of post-polymerization functionalization methods [19,25–27]. PiPOx is soluble in water and various organic solvents, exhibits high thermal and hydrolytic stability and is therefore storage stable at ambient conditions [28]. Additionally, PiPOx was shown to be biocompatible, rendering it suitable for medical and pharmaceutical applications [29,30]. Post-polymerization modification reactions with (di)carboxylic acids is a versatile and robust reaction, which enables the synthesis of soluble as well as 3D materials with a variety of applications [31,32]. The PiPOx platform was used for the development of advanced functional materials including thermoresponsive [33], and photoresponsive polymers [26], cationic polymers for gene delivery applications [34], polymer-drug conjugates [35], protein repellent surfaces [36], microparticles [17,37], elastomers [38], and reactive nanofibers [39]. Moreover, PiPOx was used in the synthesis of a diverse array of hydrogels, encompassing fully synthetic [25], hybrid [40], and degradable systems [41]. These hydrogels were shown to possess highly tunable properties, ranging from soft to ultra-tough or elastic, allowing for precise control of their mechanical performance to meet the demands of various biomedical applications [42–46]. The preparation of PiPOx in a well-defined manner is unfortunately not trivial [22,47,48]. Kang and al. reported the successful synthesis of defined PiPOx by carbanionic polymerization [21]. However, the synthesis involved initiators that are not commercially available in combination with very low reaction temperatures of −78 °C, which are detrimental when upscaling the process. In a recent work, Hoogenboom et al. also reported the polymerization of iPOx via carbanionic polymerization, obtaining well-defined PiPOx that was subsequently modified with carboxylic acids to generate thermoresponsive polymers with tailorable solubility in water [47]. For small batch sizes (up to 0.5 g), well-defined PiPOx with up to 17,500 g/mol and a dispersity of 1.12 was obtained by using a 1.6 M solution of iPOx in THF and initiation with *n*-BuLi at −20 °C. Increasing the batch size (up to 6 g), led to less defined products, which was ascribed to inefficient heat transfer and the fast, exothermic polymerization reaction. To suppress these effects, the reaction was cooled to −40 °C, which resulted in well-defined polymers on this larger scale with up to 17,100 g/mol and rather narrow molar mass distributions (dispersity 1.22).

In this work we capitalize on the advantages of continuous flow microreactors for the polymerization of iPOx. Due to the high mixing rate and heat dissipation efficiency of microreactors, which seems to be a crucial parameter for the polymerization of iPOx, we transferred the polymerization of iPOx into a microstructured continuous flow reactor, enabling us to perform the polymerization at room temperature and with high product throughput (Scheme 1).

2. Experimental

2.1. Reagents

All solvents and reagents were purchased from Sigma-Aldrich or Acros Organics and were used as received unless otherwise declared. Chloroform-d_1 and methanol-d_4 were obtained from Deutero GmbH. The solvents used for the polymerization in continuous flow were distilled from sodium/benzophenone. 2-Isopropenyl-2-oxazoline was dried over calcium hydride (CaH_2) and cryo-transferred prior to use. *n*-BuLi (2.5 M in hexanes) was used as received. Ethylene oxide (EO) was condensed and dried with *n*-BuLi and cryo-transferred prior to use.

2.2. Instrumentation

^{1}H NMR spectra were recorded at 300 MHz on a Bruker Advance III HD 300 spectrometer and were referenced internally to the residual proton signals of the deuterated solvent. For size exclusion chromatography (SEC) measurements in *N,N'*-dimethylformamide (DMF) (containing 0.25 g/L of lithium bromide as an additive) an Agilent 1100 series was used as an integrated instrument, including a PSS HEMA column (300/100/40 g mol^{-1}), a UV detector (operating at 275 nm) and an RI detector. All SEC diagrams rely on the RI detector signal, and the molar masses are referenced to linear PEG (DMF-SEC) standards provided by Polymer Standards Service (PSS). All polymers were synthesized by living anionic polymerization in continuous flow with purified reagents. MALDI-TOF measurements were performed on a Shimadzu Axima CFR MALDI-TOF or a Bruker Rapiflex. Samples were prepared with α-cyano-4-hydroxycinnamic acid (CHCA) or *trans*-2-[3-(4-*tert*-butylphenyl)-2-methyl-2-propenylidene]malononitrile (DCTB) as a matrix and potassium trifluoroacetate as a cationization agent.

2.3. Reactor setup

A schematic overview of the continuous flow reaction setup is presented in Scheme 1. All reactions were performed at ambient temperature without cooling or heating. Both the monomer (iPOx in THF) and the initiator (*n*-BuLi in benzene) solutions were dried using high vacuum techniques established for living polymerization conditions and connected via stainless steel capillary tubes (diameter (Φ) = 0.1 cm) to the pump system (HPLC pumps, Knauer Azura P 4.1 S with 10 mL ceramic pump head and pressure sensor). Both HPLC pumps were connected to common T-junctions to separate the monomer and initiator solution in two streams, before they were connected to the four-way jet micro

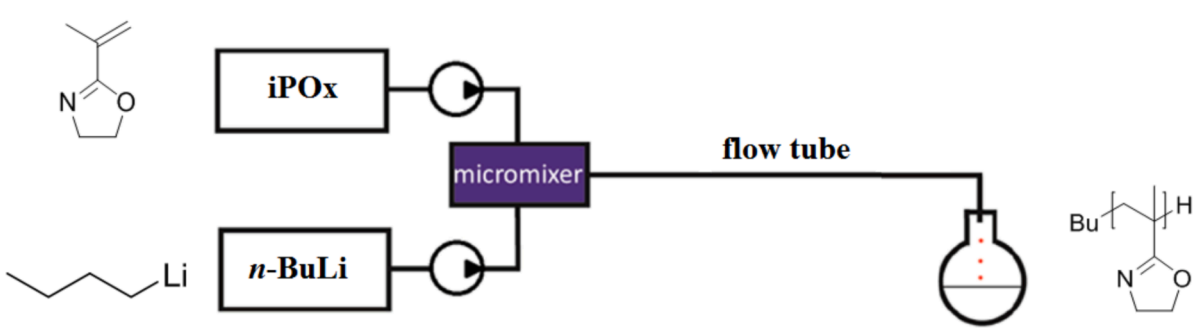

Scheme 1. Synthetic strategy for PiPOx in a continuous flow reactor, using a microstructured mixing device.

mixing device respective a SIMM-V2 micromixer (provided by IMM) via steel capillaries with a diameter of Φ = 0.1 cm. The length and the diameter of the residence tube was 300 cm respective 256 cm (diameter Φ = 0.1 cm). Reactions were quenched by the addition of methanol. In case of the end-capping experiments, the living polymer solution was directly collected in a sealed flask containing condensed ethylene oxide (EO) at −60 °C or dry butylene oxide at 0 °C after the polymerization was finished in the flow tube. The reaction solutions for end-capping were then slowly warmed up to room temperature.

2.4. Polymerization with the microfluidic setup

Prior to the reaction, the microfluidic setup was purged with dry THF via both HPLC pumps for approximately 5 min to remove potential protic impurities. For the polymerization, a solution of 1 M iPOx in dry, degassed THF was prepared. After connecting both components to the system, the pump connected to the freshly prepared initiator solution (0.185 M *n*-BuLi in dry benzene) was used for a second purge (flow rate = 1 mL/min) for approximately 5 min to ensure complete removal of potential trace impurities. The pump connected to the monomer was turned on to start the polymerization. Different molar masses were targeted by adjusting the flow rate of the initiator solution while the monomer solution's flow rate was kept constant (3 mL/min). The resulting samples were precipitated in cold diethyl ether and dried under reduced pressure.

3. Results and discussion

3.1. Living anionic polymerization of 2-isopropenyl-2-oxazoline in continuous flow

The current work focuses on the homopolymerization of iPOx in continuous flow at room temperature. Commonly, anionic polymerization in polar solvents is performed at rather low temperatures making excessive cooling necessary. As stated above, the polymerization of iPOx in THF is no exception, as it has previously been performed at −40 °C in bulk reactors to maintain control [47]. The microfluidic setup employed here enables highly efficient heat transfer due to its high surface-to-volume-ratio and short reaction times in comparison to commonly used glassware based batch reactor systems (Fig. S1). Additionally, mixing is considerably faster, providing a homogeneous distribution of reagents and heat distribution. Consequently, exothermic reactions can be performed at ambient temperature while maintaining control over the reaction and significantly decreasing the reaction times. The incorporated micromixer is of central importance, as it has to be capable of ensuring maximum mixing efficiency under the applied conditions. Therefore, we employed two different micromixers: an interdigital mixer (SIMM v2) and a four-way jet mixing device, comparing multilamination and turbulent mixing as two different mixing principles (Fig. 1).

Firstly, we examined the polymerization of iPOx using the four-way jet mixing device. In principle, this represents an extension of a T-junction, as monomer and initiator solution are divided into two capillaries and afterwards fused in the mixer (V ≈ 1 μL). The mixer is very robust due to the absence of microchannels in comparison to an interdigital mixer, contains no rubber seals and consequently is less susceptible to problems such as clogging. For the polymerization of iPOx, a thoroughly dried flask with a solution of iPOx in THF (1 M) was employed and a solution of *n*-BuLi in benzene (0.185 M). The choice of solvent for this system is challenging, as the usage of *n*-BuLi in hexane is not possible because the formed PiPOx is insoluble in hexane. Even small amounts of *n*-hexane or cyclohexane caused precipitation of the polymer in the flow tube and consequently clogging of the reactor. Therefore, benzene was chosen as a solvent for the initiator as it is inert and, at a suitable concentration, it does not cause precipitation of the polymer during the reaction. The freshly prepared solutions were connected to the microfluidic setup and injected after purging of the system. By adjusting the initiator flow rate throughout the reaction a series of polymers with different molar masses were successfully synthesized (Table 1) as also confirmed by ^{1}H NMR spectroscopy (Fig. S2).

Remarkably, polymers of up to 8000 g/mol could be synthesized with this set-up in less than one minute at room temperature in continuous flow. Regarding the characterization data, only a small deviation between targeted and experimental molar masses determined by ^{1}H NMR spectroscopy was observed, which is tentatively explained by slight variation of the flow rate of the HPLC pumps. The molar mass distributions were monomodal (Fig. 2), and dispersity ranged from 1.6 to 2.0. Broadening of the dispersity with increasing molar mass at lower flow rates is clearly visible. This is interpreted as the result of two

Table 1
Overview of the synthesized PiPOx samples using the four-way jet mixing device and a 300 cm flow tube. All polymers were obtained in a single run by adjusting the initiator solution flow rate.

Sample	Total flow rate mL/min	Flow time S	$M_{n,\,theo}$ g/mol	M_n[a] g/mol	M_n[b] g/mol	Đ[b]
Jet 1	3.50	47.12	3000	2800	2200	1.6
Jet 2	3.45	47.80	3400	3500	2400	1.6
Jet 3	3.40	48.62	3800	4000	2600	1.7
Jet 4	3.35	49.47	4300	4300	3000	1.7
Jet 5	3.30	50.36	5000	4900	2900	1.7
Jet 6	3.20	52.22	7500	7000	4000	1.9
Jet 7	3.15	53.21	10,000	8000	8000	2.0

[a] Determined by ^{1}H NMR (300 MHz, $CDCl_3$).
[b] Determined by SEC (eluent: DMF, PEG standards, RI detector).

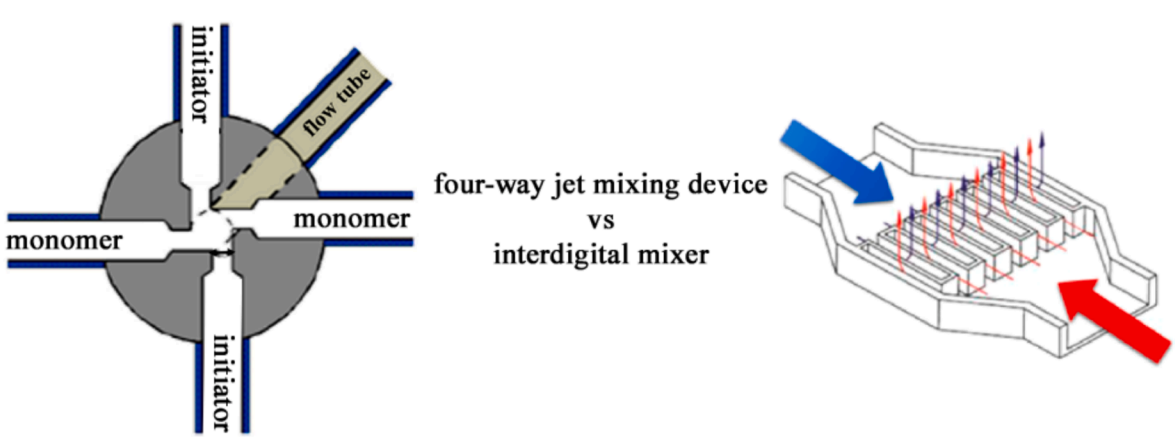

Fig. 1. Schematic structure of the four-way jet mixing device (left) and the interdigital micromixer (SIMM-V2, provided by IMM).

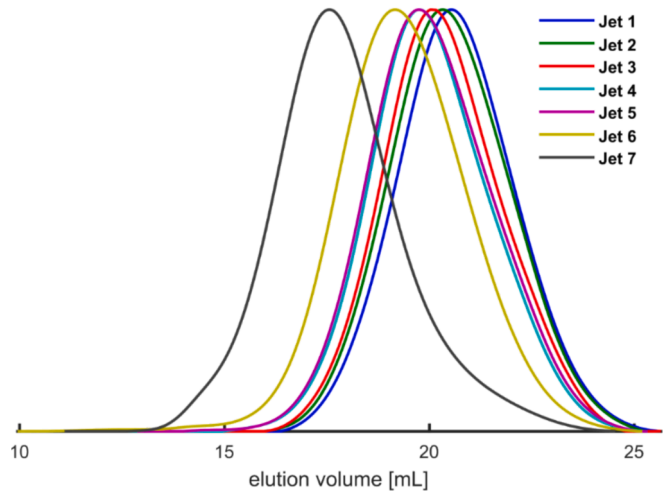

Fig. 2. SEC traces (eluent: DMF, PEG standards, RI detector) of PiPOx obtained in continuous flow using the four-way jet mixing device.

synergistic effects: (i) with decreasing flow rate the mixing efficiency decreases as was previously demonstrated by our group for a variety of monomers [11,12], and (ii) increasing viscosity for higher molar masses, which leads to impeded diffusion of monomer and living polymer chains in the flow tube. Furthermore, the relative molar masses obtained from SEC are lower compared to those obtained by ^{1}H NMR spectroscopy, except for the final polymer Jet 7. This observation from SEC is not understood at the moment, but the jump in molar mass for the final sample might be related to the higher viscosity and non-ideal mixing during the polymerization.

Due to the seemingly insufficient mixing, we substituted the four-way jet mixing device for the interdigital mixer SIMM-V2, aiming at lower dispersity of the resulting polymers. Interdigital mixers employ multilamination, combined with geometric and hydrodynamic focusing [49]. Monomer and initiator solution streams are transformed into thin liquid layers and recombined alternatingly inside the mixer (Fig. 1). Hence mixing occurs within milliseconds as a result of the exceptionally large contact area between the solution layer interfaces. With this new setup, we prepared another series of PiPOx samples (Table 2).

Using this setup, PiPOx samples with molar masses between 3000 and 18,800 g/mol were obtained. Higher molar masses were not targeted, since increasing viscosity led to significantly elevated pressure in the flow tube. All obtained polymers showed monomodal molar mass distributions (Fig. 3) and only small deviations between targeted and obtained molar mass determined by ^{1}H NMR spectroscopy, which is again ascribed to slight inaccuracies of the HPLC pumps. Dispersity values below 1.4 were achieved for polymers with up to 7500 g/mol, while for higher molar masses the distributions were broader. Again, the molar masses resulting from SEC were lower, except for the final sample IM 9, which might also be due to non-ideal mixing and high viscosity.

Table 2
Overview of the synthesized PiPOx polymers using the interdigital mixer SIMM-V2 and a 256 cm flow tube. All polymers were obtained in a single run by adjusting the flow rate of the initiator solution.

Sample	Total flow rate mL/min	Flow time s	$M_{n,\ theo}$ g/mol	M_n[a] g/mol	M_n[b] g/mol	Đ[b]
IM 1	3.50	33.51	3000	3000	1000	1.2
IM 2	3.45	34.97	4000	4000	1200	1.2
IM 3	3.35	42.09	5000	5000	1700	1.2
IM 4	3.30	42.73	6000	6000	1700	1.2
IM 5	3.25	43.38	7200	6600	1900	1.4
IM 6	2.68	52.61	8300	7500	3100	1.4
IM 7	2.66	53.01	9400	9700	3400	1.5
IM 8	2.62	53.82	12,500	11,700	5400	1.7
IM 9	2.58	54.65	18,800	18,800	14,000	1.9

[a] Determined by ^{1}H NMR (300 MHz, $CDCl_3$).
[b] Determined by SEC (eluent: DMF, PEG standards, RI detector).

The polymers with up to 7500 g/mol polymerized using the interdigital mixer showed narrow molar mass distributions in comparison to the four-way jet mixing device. The mixing efficiency of the interdigital mixer is therefore superior to that of the four-way jet mixing device for the chosen conditions. Nevertheless, an increase in dispersity can be observed with increasing molar masses. Although the total flow rate was decreased to obtain higher molar mass polymers, this does not explain the broadening of the molar mass distributions, as the interdigital mixer SIMM-V2 has been demonstrated to provide high mixing efficiency even for low flow rates (≈3 mL/min) [12]. Thus, the major parameter leading to broadened molar mass distributions appears to be the increase in viscosity of the polymerization mixture with increasing molar mass. This impedes diffusion, and chain growth becomes inhomogeneous, which leads to tailing in the SEC (Fig. 3, sample IM 9).

To sum up, we developed a protocol for living anionic polymerization of 2-isopropenyl-2-oxazoline in a microstructured continuous flow reactor at room temperature. In direct comparison, the interdigital mixer SIMM-V2 proved to be superior to a four-way jet mixing device. PiPOx samples with molar masses ranging from 3000 to 18,800 g/mol were synthesized in a single reactor run from the same stock solution by adjusting initiator solution pump rates "on the fly". Moreover, the polymerization could be performed at room temperature and, as a consequence, the reaction times were significantly lower than in the batch procedure. Thus, considering also the scale-up potential, the use of a microstructure continuous flow reactor proves to be a viable and improved alternative to the classical batch reactor for the living anionic polymerization of iPOx.

3.2. *End-capping of living PiPOx chains*

Terminal functionalization of polymers prepared by controlled methods is crucial for the synthesis of block copolymers and generally macromolecular architectures. After successful polymerization of iPOx in continuous flow, we expanded the microfluidic system to explore the potential for direct and quantitative functionalization of the chain terminus of the obtained PiPOx. As stated in the introduction, PiPOx is a versatile polymer, bearing reactive 2-oxazoline groups in the side chain that can be used for various post functionalization reactions, such as further grafting and crosslinking. To further increase the functionality, we investigated the possibility of end-capping the living polymers with epoxides to introduce a hydroxyl end group. For this purpose we used an excess (7 eq in comparison to the living chain ends) of BO (or EO) with *n*-BuLi (0.2 eq) as quenching solution to ensure the absence of protic impurities and cryo-transferred these epoxides into a thoroughly dried and sealed flask, equipped with a magnetic stirrer. In case of EO, the flask was cooled to −60 °C to prevent evaporation, and after addition of the living polymer chains the solution temperature was slowly raised to 5 °C. The flask then was connected to the reactor outlet (conditions were chosen as presented for sample IM 2, Table 2), so that the living polymer solution was directly added to the respective epoxide. The resulting samples were analyzed by ^{1}H NMR spectroscopy (Fig. 4 and Fig. S3), SEC (Fig. S4), and MALDI-TOF mass spectrometry (Fig. 5). The epoxide end-capped polymers show monomodal molar mass distributions with the same characteristics as their methanol-terminated counterparts (Fig. S4). Consequently, end-capping did not have any impact on the molar mass distributions. The ^{1}H NMR spectra confirmed the quantitative end-capping of PiPOx with EO (Fig. 4) and BO (Fig. S4) and all the signals could be unambiguously assigned. The end-capping efficiency with EO was determined by integrating the signal at 0.86–0.93 ppm (3H) corresponding to the methyl group from the initiator fragment and the characteristic signal of the methylene protons next to the hydroxyl group CH_2—CH_2—OH, which is found at 3.34–3.36 ppm (2H). The calculated end-capping efficiency with EO was 98 %.

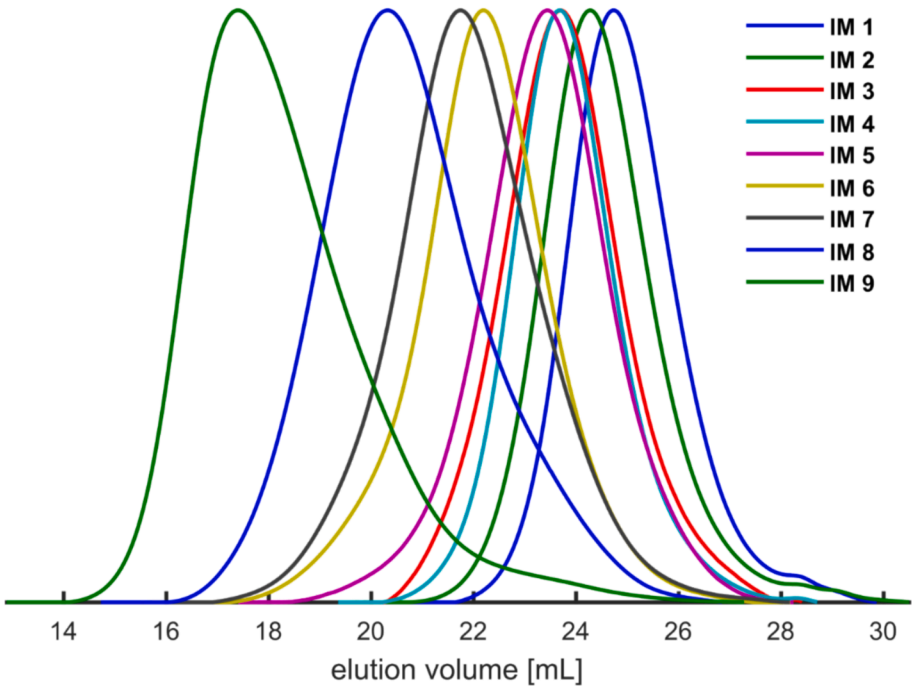

Fig. 3. SEC traces (eluent: DMF, PEG standards, RI detector) of PiPOx obtained in continuous flow using the interdigital mixer SIMM-V2.

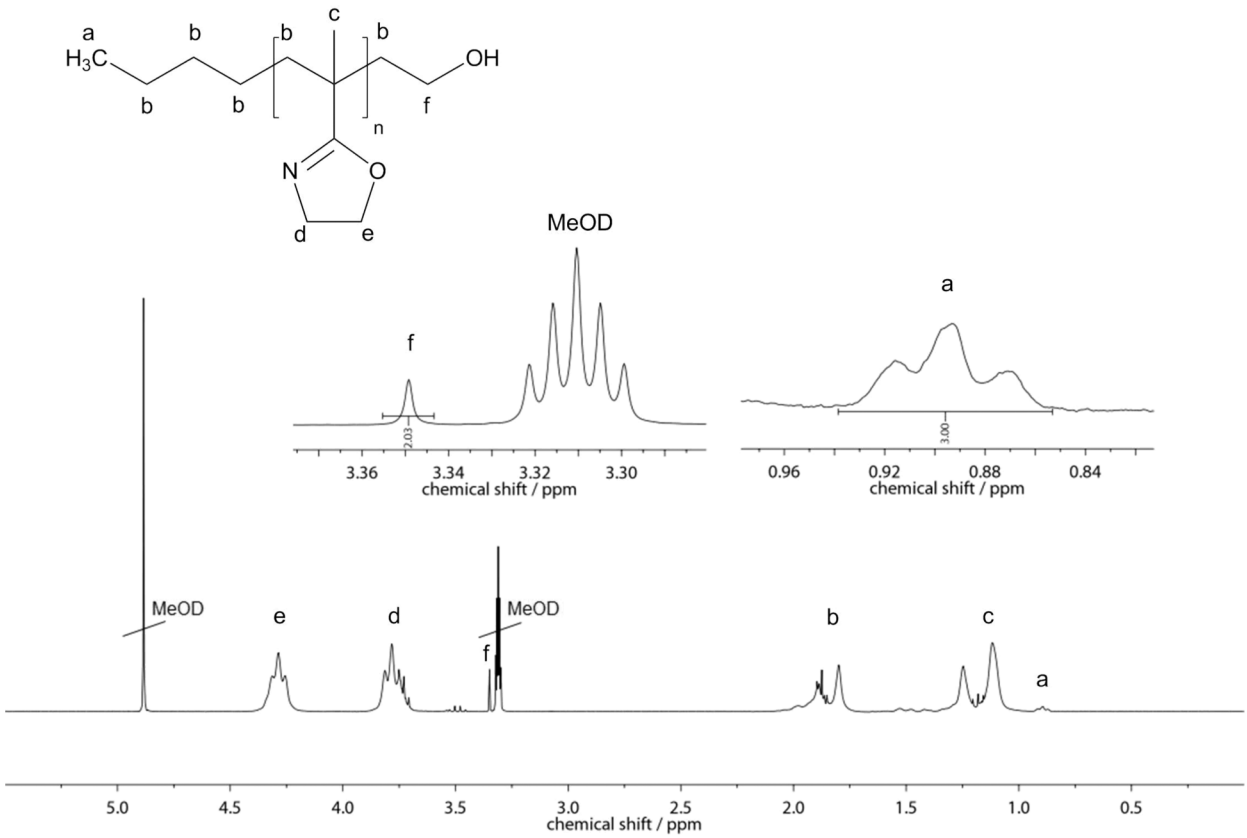

Fig. 4. ^{1}H NMR (300 MHz, MeOD) spectrum of PiPOx, DP = 35 after end-capping with ethylene oxide.

The ^{1}H NMR spectra of BO end-capped polymers also demonstrated the successful introduction of the terminal hydroxyl group (Fig. S4). Because the methyl groups of the initiator and the BO unit overlap, the integral of the signal at 0.85–0.96 ppm was normalized to 6H. A quantitative functionalization degree was found also in the case of PiPOx end-capped with BO. To obtain deeper insight into the obtained polymer structures, MALDI-TOF spectrometry was performed to analyze the end-capped polymers. The MALDI–TOF spectra confirmed a repeating unit of 111.14 g/mol, which is in agreement with the molar mass of iPOx (Fig. 5). Comparison of simulated and experimental data also confirms

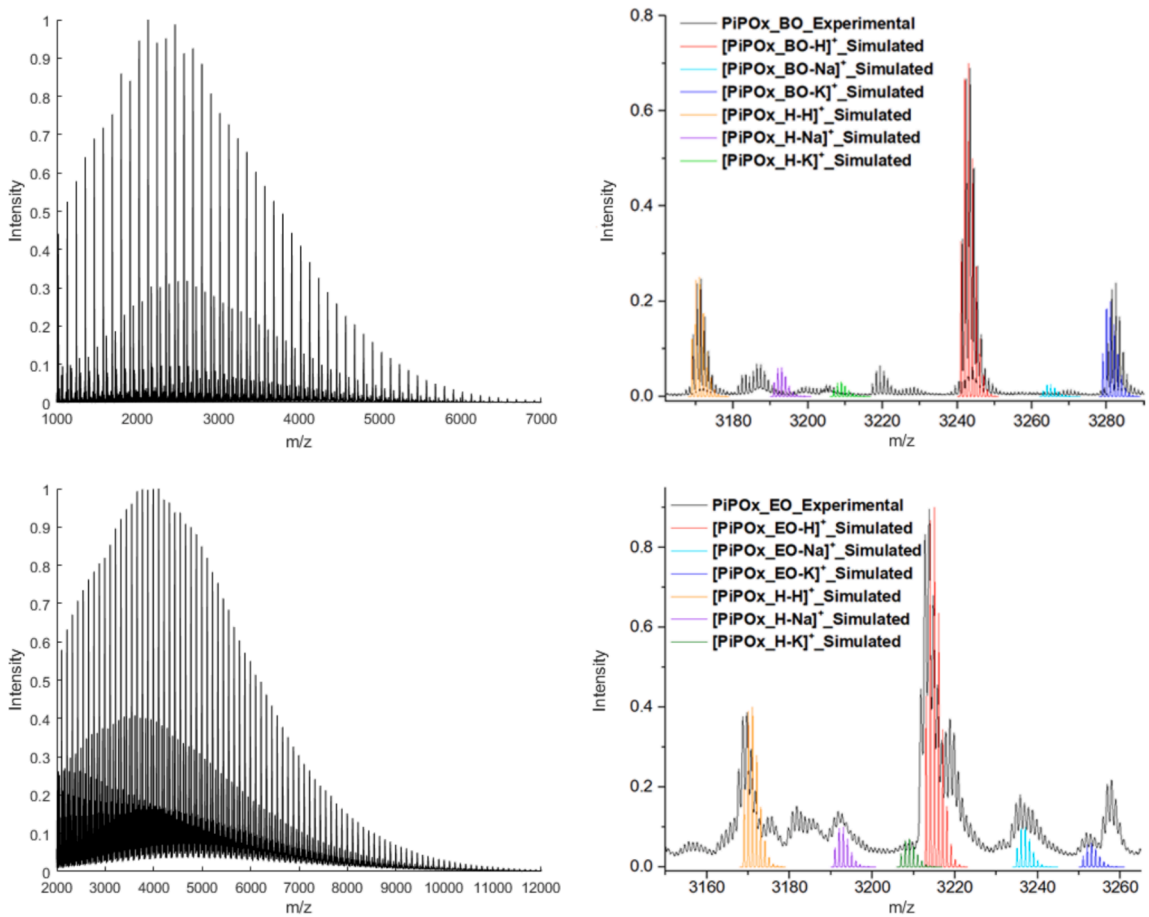

Fig. 5. MALDI-TOF spectra of PiPOx obtained via end-capping with BO (top) and EO (bottom).

the successful end-capping of PiPOx with EO and BO (Fig. 5, right).

Additionally, a minor fraction of —H terminated polymers can be found in the MALDI-TOF spectra, but the quantification of the end-capping efficiency from MALDI-TOF spectra is complex and could not be performed. Nevertheless, considering the ^{1}H NMR spectra it is clear that a high end-capping efficiency (>90 %) is achieved.

In summary, we demonstrate that the living PiPOx solution obtained by continuous flow synthesis can be end-capped with ethylene oxide or butylene oxide to expand the functionalities of PiPOx, which enables manifold pathways to complex polymer architectures. In fact, these hydroxyl end-functionalized PiPOx represent the first reported PiPOx with a defined functional chain-end.

4. Conclusions

By transferring the anionic polymerization procedure of 2-isopropenyl-2-oxazoline into a microstructured continuous flow reactor, we developed a highly efficient method to obtain poly(2-isopropenyl-2-oxazoline). Due to the high surface to volume ratio in a microfluidic setup, the polymerization could be conducted at room temperature in contrast to the low temperatures that are required in batch reactors to maintain control over the exothermic polymerization. Additionally, the reaction time was significantly decreased, allowing to synthesize polymers with up to 18,800 g/mol in less than one minute. By adjusting the flow rates during the reaction, polymers with different molar masses can be conveniently prepared from a single stock solution in the continuous polymerization set-up. Furthermore, the microfluidic setup can easily be dried for polymerization simply by purging it with dry solvent, rendering lengthy drying procedures obsolete. Terminal hydroxyl functionalities were introduced into PiPOx by end-capping the living polymer chain with BO and EO, respectively, representing the first PiPOx with a defined functional chain end. The hydroxyl end-functionalized PiPOx pave the way for complex polymer architectures based on PiPOx by exploiting the orthogonal functionality of the hydroxyl end-groups and the 2-oxazoline side-chains.

Author contributions

The manuscript was written through contributions of all authors. All authors have given approval to the final version of the manuscript.

CRediT authorship contribution statement

Philipp Jung: Writing – original draft, Methodology, Investigation, Conceptualization. **Valentin Victor Jerca:** Writing – review & editing, Methodology, Investigation, Conceptualization. **Richard Hoogenboom:** Writing – review & editing, Supervision, Funding acquisition, Conceptualization. **Holger Frey:** Writing – review & editing, Supervision, Funding acquisition, Conceptualization.

Declaration of competing interest

The authors declare that they have no known competing financial interests or personal relationships that could have appeared to influence the work reported in this paper.

Acknowledgements

R.H. acknowledges Ghent University (BOF22/GOA/006) for continuous financial support.

Appendix A. Supplementary data

Supplementary data to this article can be found online at https://doi.org/10.1016/j.eurpolymj.2025.114011.

Data availability

The authors confirm that the data supporting the findings of this study are available within the article and/or its supplementary materials. Raw data are available upon request.

References

[1] W.A. Braunecker, K. Matyjaszewski, Controlled/living radical polymerization: features, developments, and perspectives, Prog. Polym. Sci. 32 (1) (2007) 93–146.
[2] R.B. Grubbs, R.H. Grubbs, 50th anniversary perspective: living polymerization—emphasizing the molecule in macromolecules, Macromolecules 50 (18) (2017) 6979–6997.
[3] C.J. Hawker, A.W. Bosman, E. Harth, New polymer synthesis by nitroxide mediated living radical polymerizations, Chem. Rev. 101 (12) (2001) 3661–3688.
[4] J.-S. Wang, K. Matyjaszewski, Controlled/"living" radical polymerization. Halogen atom transfer radical polymerization promoted by a cu(i)/cu(ii) redox process, Macromolecules 28 (23) (1995) 7901–7910.
[5] D. Baskaran, A.H.E. Müller, Anionic vinyl polymerization—50 years after Michael Szwarc, Prog. Polym. Sci. 32 (2) (2007) 173–219.
[6] N. Hadjichristidis, A. Hirao, Anionic Polymerization: Principles, Practice, Strength, Consequences and Applications, Springer, Tokyo, 2015.
[7] N. Hadjichristidis, M. Pitsikalis, S. Pispas, H. Iatrou, Polymers with complex architecture by living anionic polymerization, Chem. Rev. 101 (12) (2001) 3747–3792.
[8] E. Baeten, B. Verbraeken, R. Hoogenboom, T. Junkers, Continuous poly(2-oxazoline) triblock copolymer synthesis in a microfluidic reactor cascade, Chem. Commun. 51 (58) (2015) 11701–11704.
[9] Y. Takahashi, A. Nagaki, Anionic polymerization using flow microreactors, Molecules 24 (8) (2019).
[10] T. Junkers, Precision polymer design in microstructured flow reactors: improved control and first upscale at once, Macromol. Chem. Phys. 218 (2) (2017) 1600421.
[11] J. Morsbach, A.H.E. Müller, E. Berger-Nicoletti, H. Frey, Living polymer chains with predictable molecular weight and dispersity via carbanionic polymerization in continuous flow: mixing rate as a key parameter, Macromolecules 49 (14) (2016) 5043–5050.
[12] A. Natalello, J. Morsbach, A. Friedel, A. Alkan, C. Tonhauser, A.H.E. Müller, H. Frey, Living anionic polymerization in continuous flow: facilitated synthesis of high-molecular weight poly(2-vinylpyridine) and polystyrene, Org. Process Res. Dev. 18 (11) (2014) 1408–1412.
[13] A. Nagaki, A. Miyazaki, J.-I. Yoshida, Synthesis of polystyrenes−poly(alkyl methacrylates) block copolymers via anionic polymerization using an integrated flow microreactor system, Macromolecules 43 (20) (2010) 8424–8429.
[14] A. Nagaki, Y. Tomida, A. Miyazaki, J.-I. Yoshida, Microflow system controlled anionic polymerization of alkyl methacrylates, Macromolecules 42 (13) (2009) 4384–4387.
[15] A. Furuta, K. Okada, T. Fukuyama, Efficient anionic ring opening polymerization of ethylene oxide under microfluidic conditions, Bull. Chem. Soc. Jpn. 90 (7) (2017) 838–842.
[16] D. Wilms, J. Nieberle, J. Klos, H. Löwe, H. Frey, Synthesis of hyperbranched polyglycerol in a continuous flow microreactor, Chem. Eng. Technol. 30 (11) (2007) 1519–1524.
[17] V.V. Jerca, F.A. Nicolescu, R. Trusca, E. Vasile, A. Baran, D.F. Anghel, D. S. Vasilescu, D.M. Vuluga, Oxazoline-functional polymer particles graft with azo-dye, React. Funct. Polym. 71 (4) (2011) 373–379.
[18] T. Kagiya, T. Matsuda, Selective polymerization of 2-isopropenyl-2-oxazoline and cross-linking reaction of the polymers, Polym. J. 3 (3) (1972) 307–314.
[19] C. Weber, T. Neuwirth, K. Kempe, B. Ozkahraman, E. Tamahkar, H. Mert, C. R. Becer, U.S. Schubert, 2-isopropenyl-2-oxazoline: a versatile monomer for functionalization of polymers obtained via raft, Macromolecules 45 (1) (2012) 20–27.
[20] V. Raus, A. Holos, J. Kronek, J. Mosnácek, Well-defined linear and grafted poly(2-isopropenyl-2-oxazoline)s prepared via copper-mediated reversible-deactivation radical polymerization methods, Macromolecules 53 (6) (2020) 2077–2087.
[21] H.B. Feng, M. Changez, K. Hong, J. Mays, N.-G. Kang, 2-Isopropenyl-2-oxazoline: well-defined homopolymers and block copolymers via living anionic polymerization, Macromolecules 50 (1) (2017) 54–62.
[22] N. Zhang, S. Huber, A. Schulz, R. Luxenhofer, R. Jordan, Cylindrical molecular brushes of poly(2-oxazoline)s from 2-isopropenyl-2-oxazoline, Macromolecules 42 (6) (2009) 2215–2221.
[23] N. Zhang, S. Salzinger, B.S. Soller, B. Rieger, Rare earth metal-mediated group-transfer polymerization: from defined polymer microstructures to high-precision nano-scaled objects, J. Am. Chem. Soc. 135 (24) (2013) 8810–8813.
[24] D.A. Tomalia, B.P. Thill, M.J. Fazio, Ionic oligomerization and polymerization of 2-alkenyl-2-oxazolines, Polym. J. 12 (1980) 661–675.
[25] F.A. Jerca, A.M. Anghelache, E. Ghibu, S. Cecoltan, I.C. Stancu, R. Trusca, E. Vasile, M. Teodorescu, D.M. Vuluga, R. Hoogenboom, V.V. Jerca, Poly(2-isopropenyl-2-oxazoline) hydrogels for biomedical applications, Chem. Mater. 30 (21) (2018) 7938–7949.
[26] M.C. Spiridon, F.A. Jerca, V.V. Jerca, D.S. Vasilescu, D.M. Vuluga, 2-oxazoline based photo-responsive azo-polymers. Synthesis, characterization and isomerization kinetics, Eur. Polym. J. 49 (2) (2013) 452–463.
[27] N. Zhang, T. Pompe, I. Amin, R. Luxenhofer, C. Werner, R. Jordan, Tailored poly(2-oxazoline) polymer brushes to control protein adsorption and cell adhesion, Macromol. Biosci. 12 (7) (2012) 926–936.
[28] F.A. Jerca, V.V. Jerca, R. Hoogenboom, In vitro assessment of the hydrolytic stability of poly(2-isopropenyl-2-oxazoline), Biomacromolecules 22 (12) (2021) 5020–5032.
[29] Z. Kroneková, M. Mikulec, N. Petrencíková, E. Paulovicová, L. Paulovicová, V. Jancinová, R. Nosál, P.S. Reddy, G.D. Shimoga, D. Chorvát, J. Kronek, Ex vivo and in vitro studies on the cytotoxicity and immunomodulative properties of poly (2-isopropenyl-2-oxazoline) as a new type of biomedical polymer, Macromol. Biosci. 16 (8) (2016) 1200–1211.
[30] E. Paulovicová, Z. Kroneková, L. Paulovicová, M. Majercíková, J. Kronek, Cell-mediated immunoreactivity of poly(2-isopropenyl-2-oxazoline) as promising formulation for immunomodulation, Materials 14 (6) (2021).
[31] J. Kronek, A. Minarciková, Z. Kroneková, M. Majerciková, P. Strasser, I. Teasdale, Poly(2-isopropenyl-2-oxazoline) as a versatile functional polymer for biomedical applications, Polymers 16 (12) (2024).
[32] B. Kopka, B. Kost, M. Basko, Poly(2-isopropenyl-2-oxazoline) as a reactive polymer for materials development, Polym. Chem. 13 (33) (2022) 4736–4746.
[33] F.A. Jerca, V.V. Jerca, R. Hoogenboom, Well-defined thermoresponsive polymethacrylamide copolymers with ester pendent groups through one-pot statistical postpolymerization modification of poly(2-isopropenyl-2-oxazoline) with multiple carboxylic acids, J. Polym. Sci. Part A-Polym. Chem. 57 (3) (2019) 360–366.
[34] F.A. Jerca, C. Muntean, K. Remaut, V.V. Jerca, K. Raemdonck, R. Hoogenboom, Cationic amino-acid functionalized polymethacrylamide vectors for sirna transfection based on modification of poly(2-isopropenyl-2-oxazoline), J. Control. Release 364 (2023) 687–699.
[35] Z. Kronekova, M. Majercikova, E. Paulovicova, A. Minarcikova, M. Danko, J. Markus, S. Letasiova, J. Kronek, Cytotoxicity and bioimmunological activity of poly(2-isopropenyl-2-oxazoline) conjugates with ibuprofen using 3d reconstructed tissue models, Biomacromolecules 25 (6) (2024) 3288–3301.
[36] M. Singh, L. Poláková, A.D. Pereira, O. Pop-Georgievski, J. Svoboda, T. Riedel, S. Gupta, Z. Sedláková, V. Raus, R. Poreba, Well-defined poly(2-isopropenyl-2-oxazoline) brushes provide fouling resistance and versatility in surface functionalization, Polym. Chem. 15 (32) (2024) 3300–3310.
[37] M. Cvek, M. Ilcikova, M. Mrlik, K. Skopalova, A. Vesel, M. Masar, P. Humpolicek, Fine carbonyl iron particles grafted with poly(2-isopropenyl-2-oxazoline): a potential embolization agent for cancer therapy, Appl. Surf. Sci. 681 (2025).
[38] P. Strasser, C. Walliser, E. Ajvazi, F. Bauer, O. Brüggemann, S. Lämmermann, Z. Major, A. Minarcíková, M. Majercíková, M. Micusik, A. Kleinová, Z. Kroneková, J. Kronek, I. Teasdale, Metal-free curing of 3d printable silicone elastomers via thermally triggered 2-oxazoline cross-linkers, Macromolecules 58 (5) (2025) 2709–2718.
[39] R. Merckx, J. Becelaere, E. Schoolaert, O. Frateur, M.N. Leiske, D. Peeters, F. A. Jerca, V.V. Jerca, K. De Clerck, R. Hoogenboom, Poly(2-isoproprenyl-2-oxazoline)-based reactive hydrophilic cross-linked nanofiber networks as the basis for colorimetric continuous meat freshness monitoring sensors, Chem. Mater. 35 (17) (2023) 7079–7093.
[40] P.T. Yu, T. Sedlacik, L. Parmentier, F.A. Jerca, V.V. Jerca, S. Van Vlierberghe, M. N. Leiske, R. Hoogenboom, Degradable cell-adhesive hybrid hydrogels by cross-linking of gelatin with poly(2-isopropenyl-2-oxazoline), Biomacromolecules 25 (8) (2024) 5332–5342.
[41] E. Ghibu, V. Vasile, I. Caras, E.D. Giol, N.D. Banu, D.M. Vuluga, R. Stan, V.V. Jerca, F.A. Jerca, Poly(2-isopropenyl-2-oxazoline) hydrogels with biodegradable junction points for drug-delivery applications, Chem. Mater. 36 (15) (2024) 7459–7475.
[42] X.W. Xu, F.A. Jerca, V.V. Jerca, R. Hoogenboom, Covalent poly(2-isopropenyl-2-oxazoline) hydrogels with ultrahigh mechanical strength and toughness through secondary terpyridine metal-coordination crosslinks, Adv. Funct. Mater. 29 (48) (2019).
[43] X.W. Xu, F.A. Jerca, K. Van Hecke, V.V. Jerca, R. Hoogenboom, High compression strength single network hydrogels with pillar[5]arene junction points, Mater. Horiz. 7 (2) (2020) 566–573.
[44] B. Kopka, B. Kost, K. Rajkowska, A. Pawlak, A. Kunicka-Styczynska, T. Biela, M. Basko, A simple strategy for efficient preparation of networks based on poly(2-isopropenyl-2-oxazoline), poly(ethylene oxide), and selected biologically active compounds: novel hydrogels with antibacterial properties, Soft Matter 17 (47) (2021) 10683–10695.
[45] B. Kopka, B. Kost, A. Pawlak, A. Tomaszewska, A. Krupa, M. Basko, Covalent segmented polymer networks composed of poly(2-isopropenyl-2-oxazoline) and selected aliphatic polyesters: designing biocompatible amphiphilic materials containing degradable blocks, Soft Matter 19 (36) (2023) 6987–6999.
[46] B. Kopka, B. Kost, A. Pawlak, I. Bak-Sypien, M. Brzezinski, A. Tomaszewska, A. Krupa, P. Józwiak, M. Basko, Biocompatible, porous hydrogels composed of aliphatic polyesters and poly(2-isopropenyl-2-oxazoline). Their application as scaffolds for bone tissue regeneration, Soft Matter 20 (33) (2024) 6655–6667.

[47] F.A. Jerca, V.V. Jerca, A.M. Anghelache, D.M. Vuluga, R. Hoogenboo, Poly(2-isopropenyl-2-oxazoline) as a versatile platform towards thermoresponsive copolymers, Polym. Chem. 9 (25) (2018) 3473–3478.

[48] D.A. Tomalia, B.P. Thill, M.J. Fazio, Ionic oligomerization and polymerization of 2-alkenyl-2-oxazolines, Polym. J. 12 (9) (1980) 661–675.

[49] V. Hessel, S. Hardt, H. Löwe, F. Schönfeld, Laminar mixing in different interdigital micromixers: I. Experimental characterization, AIChE J. 49 (3) (2003) 566–577.