Linkit Kim/SMD

linkit-v4

Table of contents

Sheet 1: Project overview (this page)

Legend

General comment such as function title, configuration, ...

Text to be added to silkscreen.

Warning text.

Notes to generate the board layout.

OPEN PLATFORM LICENSE AGREEMENT

The Open Platform License Agreement (“Agreement”) is a binding legal contract between you ("You") and STMicroelectronics International N.V. (“ST”), a company incorporated under the laws of the Netherlands acting for the purpose of this Agreement through its Swiss branch 39, Chemin du Champ des Filles, 1228 Plan-les-Ouates, Geneva, Switzerland.

By using the enclosed reference designs, schematics, PC board layouts, and documentation, in hardcopy or CAD tool file format (collectively, the “Reference Material”), You are agreeing to be bound by the terms and conditions of this Agreement. Do not use the Reference Material until You have read and agreed to this Agreement terms and conditions. The use of the Reference Material automatically implies the acceptance of the Agreement terms and conditions.

The complete Open Platform License Agreement can be found on www.st.com/opla.

U_linkit-v4
linkit-v4.SchDoc

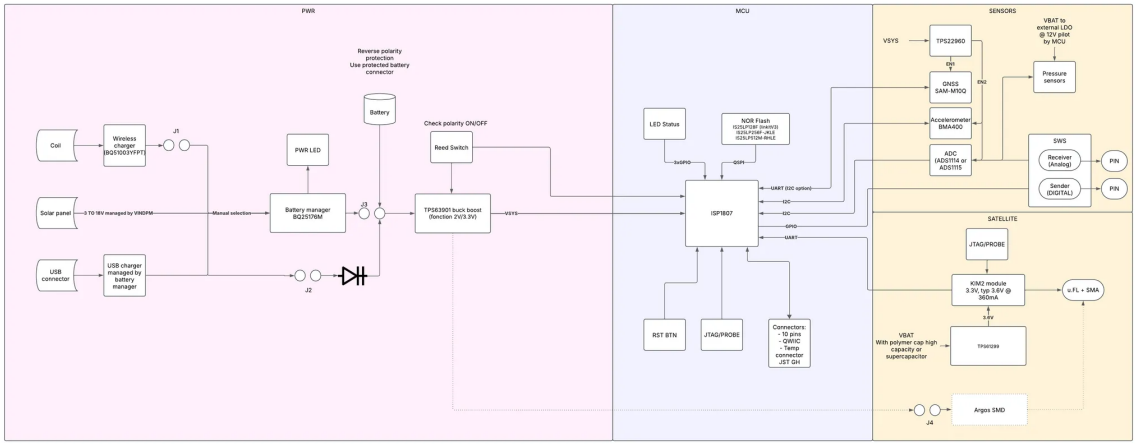

Title	*Linkit Kim/SMD*		*Arribada Initiative* *https://github.com/arribada* *contact@arribada.org* *arribada.org* *UK - Portsmouth*
Size: A4	Reference: linkit-v4	Revision: 1 0	
Date: 05/05/2025	Time: 12:13:23	Sheet 1 of 12	
File: C:\Users\fourn\Altium\AD25\Projects\Arribada\linkit-v4-hw\Project_Overview.SchDoc			

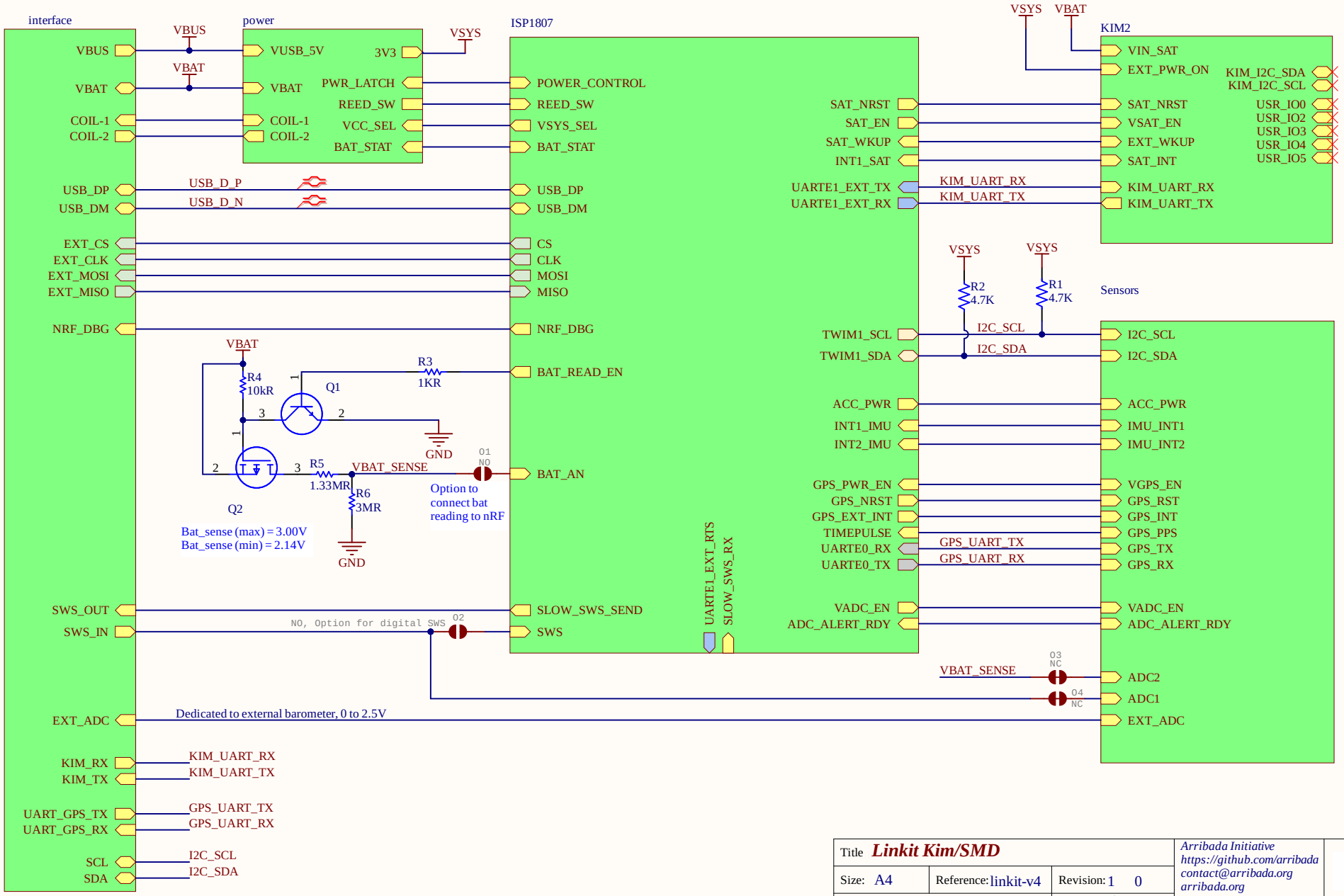

Title	***Linkit Kim/SMD***		*Arribada Initiative*
Size: A4	Reference: linkit-v4	Revision: 1 0	*https://github.com/arribada*
Date: 05/05/2025	Time: 12:13:23	Sheet 2 of 12	*contact@arribada.org*
File: C:\Users\fourn\Altium\AD25\Projects\Arribada\linkit-v4-hw\linkit-v4.SchDoc			*arribada.org*
			UK - Portsmouth

ARRIBADA initiative

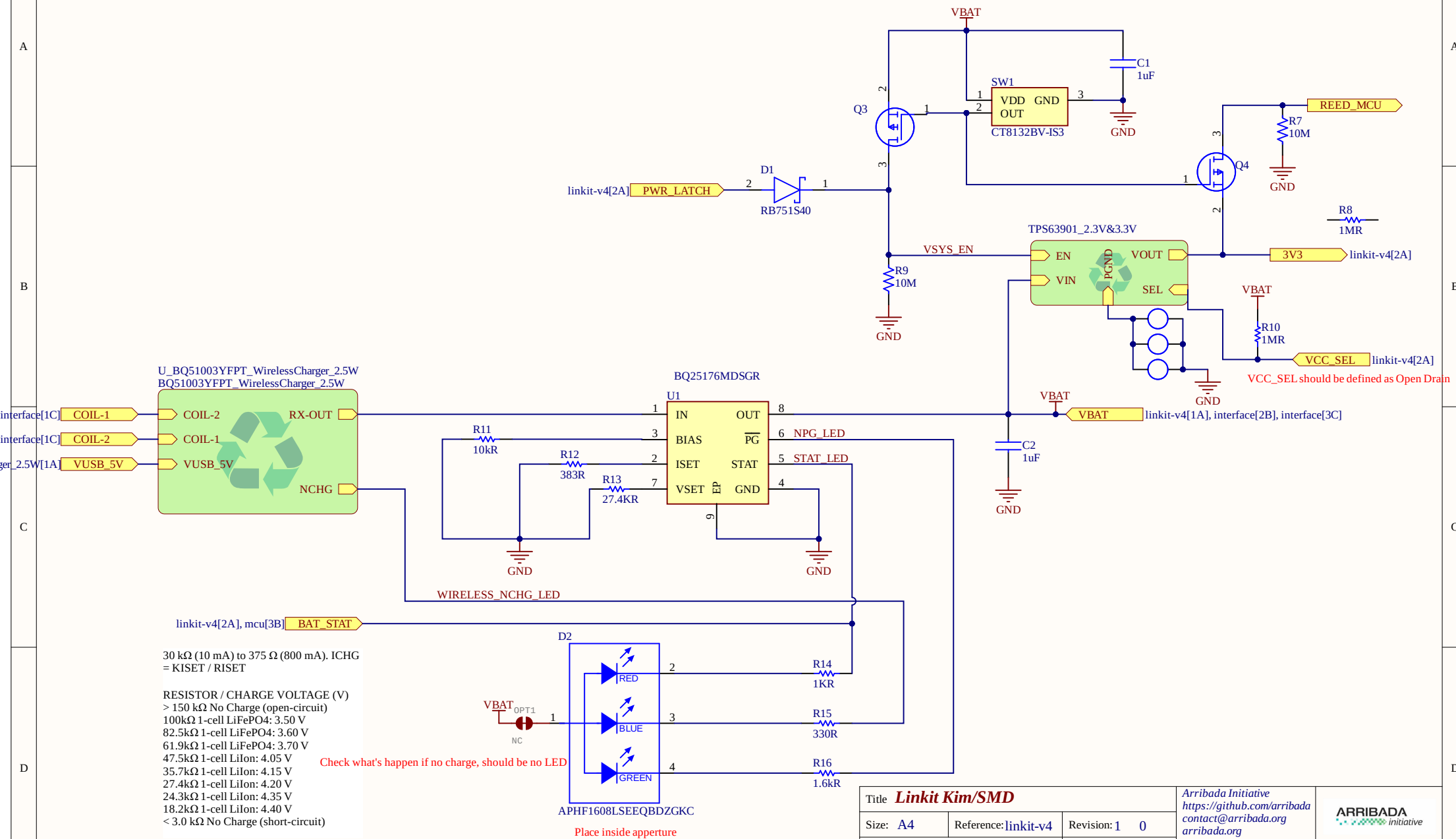
VBAT
C1
1uF
SW1
VDD GND
OUT
CT8132BV-IS3
GND
Q3
REED_MCU
R7
10M
Q4
GND
linkit-v4[2A]
PWR_LATCH
D1
RB751S40
R8
1MR
TPS63901_2.3V&3.3V
VSYS_EN
EN
VOUT
PGND
VIN
SEL
3V3
linkit-v4[2A]
R9
10M
GND
VBAT
R10
1MR
VCC_SEL
linkit-v4[2A]
VCC_SEL should be defined as Open Drain
GND
U_BQ51003YFPT_WirelessCharger_2.5W
BQ51003YFPT_WirelessCharger_2.5W
interface[1C]
COIL-1
COIL-2
RX-OUT
interface[1C]
COIL-2
COIL-1
ger_2.5W[1A]
VUSB_5V
VUSB_5V
NCHG
BQ25176MDSGR
U1
IN
OUT
BIAS
PG
ISET
STAT
VSET
EP
GND
R11
10kR
R12
383R
R13
27.4KR
NPG_LED
STAT_LED
VBAT
VBAT
linkit-v4[1A], interface[2B], interface[3C]
C2
1uF
GND
GND
GND
WIRELESS_NCHG_LED
linkit-v4[2A], mcu[3B]
BAT_STAT
D2
RED
BLUE
GREEN
R14
1KR
R15
330R
R16
1.6kR
VBAT
OPT1
NC
APHF1608LSEEQBDZGKC
Place inside apperture
30 kΩ (10 mA) to 375 Ω (800 mA). ICHG
= KISET / RISET
RESISTOR / CHARGE VOLTAGE (V)
> 150 kΩ No Charge (open-circuit)
100kΩ 1-cell LiFePO4: 3.50 V
82.5kΩ 1-cell LiFePO4: 3.60 V
61.9kΩ 1-cell LiFePO4: 3.70 V
47.5kΩ 1-cell LiIon: 4.05 V
35.7kΩ 1-cell LiIon: 4.15 V
27.4kΩ 1-cell LiIon: 4.20 V
24.3kΩ 1-cell LiIon: 4.35 V
18.2kΩ 1-cell LiIon: 4.40 V
< 3.0 kΩ No Charge (short-circuit)
Check what's happen if no charge, should be no LED
Title Linkit Kim/SMD
Size: A4
Reference: linkit-v4
Revision: 1 0
Date: 05/05/2025
Time: 12:13:23
Sheet 3 of 12
File: C:\Users\fourn\Altium\AD25\Projects\Arribada\linkit-v4-hw\pwr.SchDoc
Arribada Initiative
https://github.com/arribada
contact@arribada.org
arribada.org
UK - Portsmouth
ARRIBADA
initiative

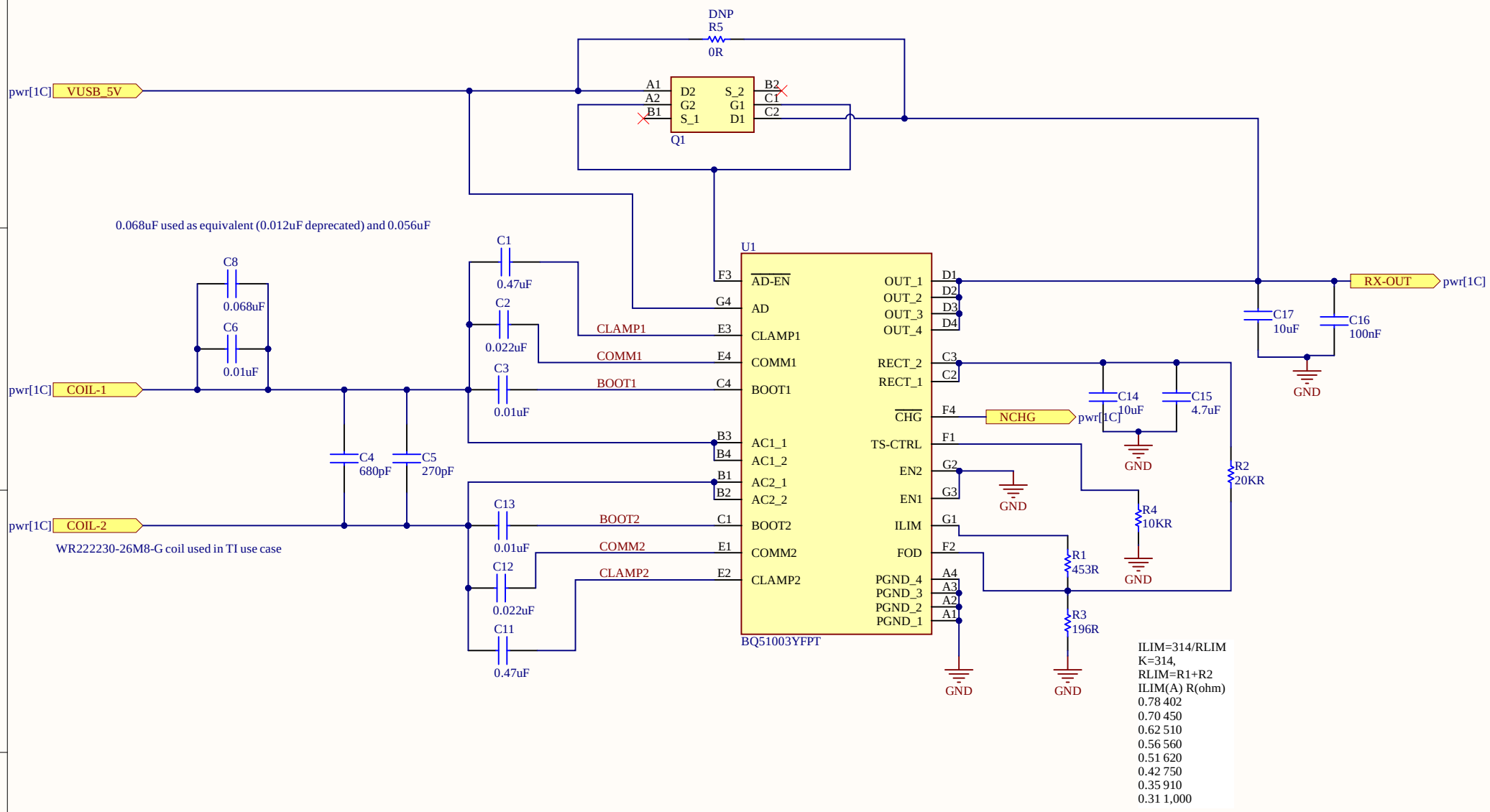

Title	Linkit Kim/SMD		Arribada Initiative https://github.com/arribada contact@arribada.org arribada.org UK - Portsmouth
Size: A4	Reference: linkit-v4	Revision: 1 0	
Date: 05/05/2025	Time: 12:13:23	Sheet 4 of 12	
File: C:\Users\fourn\Altium\AD25\Projects\Arribada\hardware-lib\DeviceSheets\Power\BQ51003YFPT_WirelessCharger_2.5W.S			

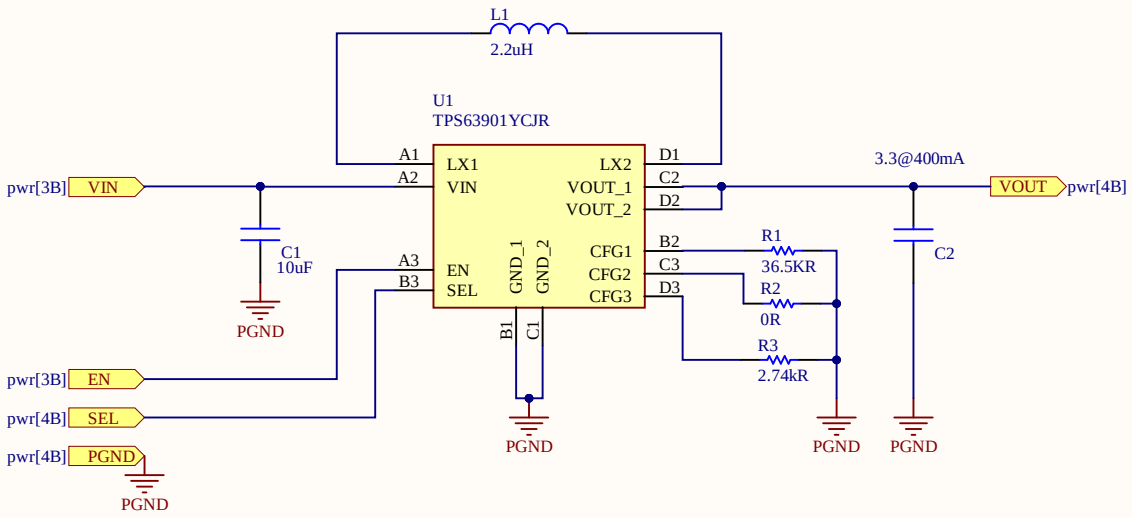

Table 6-3. Output Voltage (SEL Pin = Low) Settings

Output Voltage – $V_{O(1)}$ (SEL = LOW)	R_{CFG3}
1.8 V	0 Ω
2.0 V	511 Ω
2.1 V	1.15 kΩ
2.2 V	1.87 kΩ
2.3 V	2.74 kΩ
2.4 V	3.83 kΩ
2.5 V	5.11 kΩ
2.6 V	6.49 kΩ
2.7 V	8.25 kΩ
2.8 V	10.5 kΩ
3.0 V	13.3 kΩ
3.3 V	16.2 kΩ
3.6 V	20.5 kΩ
4.0 V	24.9 kΩ
4.5 V	30.1 kΩ
5.0 V	36.5 kΩ

Output Voltage – $V_{O(2)}$ (SEL = HIGH)		Input Current Limit							
		UNLIMITED	100 mA	50 mA	25 mA	10 mA	5 mA	2.5 mA	1 mA
1.8 V	R_{CFG1}	0 Ω							
	R_{CFG2}	0 Ω	511 Ω	1.15 kΩ	1.87 kΩ	2.74 kΩ	3.83 kΩ	5.11 kΩ	6.49 kΩ
1.9 V	R_{CFG1}	511 Ω							
	R_{CFG2}	0 Ω	511 Ω	1.15 kΩ	1.87 kΩ	2.74 kΩ	3.83 kΩ	5.11 kΩ	6.49 kΩ
2.0 V	R_{CFG1}	1.15 kΩ							
	R_{CFG2}	0 Ω	511 Ω	1.15 kΩ	1.87 kΩ	2.74 kΩ	3.83 kΩ	5.11 kΩ	6.49 kΩ
2.1 V	R_{CFG1}	1.87 kΩ							
	R_{CFG2}	0 Ω	511 Ω	1.15 kΩ	1.87 kΩ	2.74 kΩ	3.83 kΩ	5.11 kΩ	6.49 kΩ
2.2 V	R_{CFG1}	2.74 kΩ							
	R_{CFG2}	0 Ω	511 Ω	1.15 kΩ	1.87 kΩ	2.74 kΩ	3.83 kΩ	5.11 kΩ	6.49 kΩ
2.3 V	R_{CFG1}	3.83 kΩ							
	R_{CFG2}	0 Ω	511 Ω	1.15 kΩ	1.87 kΩ	2.74 kΩ	3.83 kΩ	5.11 kΩ	6.49 kΩ
2.4 V	R_{CFG1}	5.11 kΩ							
	R_{CFG2}	0 Ω	511 Ω	1.15 kΩ	1.87 kΩ	2.74 kΩ	3.83 kΩ	5.11 kΩ	6.49 kΩ
2.5 V	R_{CFG1}	6.49 kΩ							
	R_{CFG2}	0 Ω	511 Ω	1.15 kΩ	1.87 kΩ	2.74 kΩ	3.83 kΩ	5.11 kΩ	6.49 kΩ
2.6 V	R_{CFG1}	8.25 kΩ							
	R_{CFG2}	0 Ω	511 Ω	1.15 kΩ	1.87 kΩ	2.74 kΩ	3.83 kΩ	5.11 kΩ	6.49 kΩ
2.7 V	R_{CFG1}	10.5 kΩ							
	R_{CFG2}	0 Ω	511 Ω	1.15 kΩ	1.87 kΩ	2.74 kΩ	3.83 kΩ	5.11 kΩ	6.49 kΩ
2.8 V	R_{CFG1}	13.3 kΩ							
	R_{CFG2}	0 Ω	511 Ω	1.15 kΩ	1.87 kΩ	2.74 kΩ	3.83 kΩ	5.11 kΩ	6.49 kΩ
2.9 V	R_{CFG1}	16.2 kΩ							
	R_{CFG2}	0 Ω	511 Ω	1.15 kΩ	1.87 kΩ	2.74 kΩ	3.83 kΩ	5.11 kΩ	6.49 kΩ
3.0 V	R_{CFG1}	20.5 kΩ							
	R_{CFG2}	0 Ω	511 Ω	1.15 kΩ	1.87 kΩ	2.74 kΩ	3.83 kΩ	5.11 kΩ	6.49 kΩ
3.1 V	R_{CFG1}	24.9 kΩ							
	R_{CFG2}	0 Ω	511 Ω	1.15 kΩ	1.87 kΩ	2.74 kΩ	3.83 kΩ	5.11 kΩ	6.49 kΩ
3.2 V	R_{CFG1}	30.1 kΩ							
	R_{CFG2}	0 Ω	511 Ω	1.15 kΩ	1.87 kΩ	2.74 kΩ	3.83 kΩ	5.11 kΩ	6.49 kΩ
3.3 V	R_{CFG1}	36.5 kΩ							
	R_{CFG2}	0 Ω	511 Ω	1.15 kΩ	1.87 kΩ	2.74 kΩ	3.83 kΩ	5.11 kΩ	6.49 kΩ
3.4 V	R_{CFG1}	0 Ω							
	R_{CFG2}	8.25 kΩ	10.5 kΩ	13.3 kΩ	16.2 kΩ	20.5 kΩ	24.9 kΩ	30.1 kΩ	36.5 kΩ
3.5 V	R_{CFG1}	511 Ω							
	R_{CFG2}	8.25 kΩ	10.5 kΩ	13.3 kΩ	16.2 kΩ	20.5 kΩ	24.9 kΩ	30.1 kΩ	36.5 kΩ
3.6 V	R_{CFG1}	1.15 kΩ							
	R_{CFG2}	8.25 kΩ	10.5 kΩ	13.3 kΩ	16.2 kΩ	20.5 kΩ	24.9 kΩ	30.1 kΩ	36.5 kΩ
3.7 V	R_{CFG1}	1.87 kΩ							
	R_{CFG2}	8.25 kΩ	10.5 kΩ	13.3 kΩ	16.2 kΩ	20.5 kΩ	24.9 kΩ	30.1 kΩ	36.5 kΩ
3.8 V	R_{CFG1}	2.74 kΩ							
	R_{CFG2}	8.25 kΩ	10.5 kΩ	13.3 kΩ	16.2 kΩ	20.5 kΩ	24.9 kΩ	30.1 kΩ	36.5 kΩ
3.9 V	R_{CFG1}	3.83 kΩ							
	R_{CFG2}	8.25 kΩ	10.5 kΩ	13.3 kΩ	16.2 kΩ	20.5 kΩ	24.9 kΩ	30.1 kΩ	36.5 kΩ
4.0 V	R_{CFG1}	5.11 kΩ							
	R_{CFG2}	8.25 kΩ	10.5 kΩ	13.3 kΩ	16.2 kΩ	20.5 kΩ	24.9 kΩ	30.1 kΩ	36.5 kΩ
4.1 V	R_{CFG1}	6.49 kΩ							
	R_{CFG2}	8.25 kΩ	10.5 kΩ	13.3 kΩ	16.2 kΩ	20.5 kΩ	24.9 kΩ	30.1 kΩ	36.5 kΩ
4.2 V	R_{CFG1}	8.25 kΩ							
	R_{CFG2}	8.25 kΩ	10.5 kΩ	13.3 kΩ	16.2 kΩ	20.5 kΩ	24.9 kΩ	30.1 kΩ	36.5 kΩ
4.3 V	R_{CFG1}	10.5 kΩ							
	R_{CFG2}	8.25 kΩ	10.5 kΩ	13.3 kΩ	16.2 kΩ	20.5 kΩ	24.9 kΩ	30.1 kΩ	36.5 kΩ
4.4 V	R_{CFG1}	13.3 kΩ							
	R_{CFG2}	8.25 kΩ	10.5 kΩ	13.3 kΩ	16.2 kΩ	20.5 kΩ	24.9 kΩ	30.1 kΩ	36.5 kΩ
4.5 V	R_{CFG1}	16.2 kΩ							
	R_{CFG2}	8.25 kΩ	10.5 kΩ	13.3 kΩ	16.2 kΩ	20.5 kΩ	24.9 kΩ	30.1 kΩ	36.5 kΩ
4.6 V	R_{CFG1}	20.5 kΩ							
	R_{CFG2}	8.25 kΩ	10.5 kΩ	13.3 kΩ	16.2 kΩ	20.5 kΩ	24.9 kΩ	30.1 kΩ	36.5 kΩ
4.7 V	R_{CFG1}	24.9 kΩ							
	R_{CFG2}	8.25 kΩ	10.5 kΩ	13.3 kΩ	16.2 kΩ	20.5 kΩ	24.9 kΩ	30.1 kΩ	36.5 kΩ
4.8 V	R_{CFG1}	30.1 kΩ							
	R_{CFG2}	8.25 kΩ	10.5 kΩ	13.3 kΩ	16.2 kΩ	20.5 kΩ	24.9 kΩ	30.1 kΩ	36.5 kΩ
5.0 V	R_{CFG1}	36.5 kΩ							
	R_{CFG2}	8.25 kΩ	10.5 kΩ	13.3 kΩ	16.2 kΩ	20.5 kΩ	24.9 kΩ	30.1 kΩ	36.5 kΩ

Title ***Linkit Kim/SMD***

Size: A4 | Reference: linkit-v4 | Revision: 1 0

Date: 05/05/2025 | Time: 12:13:24 | Sheet of

File: C:\Users\fourn\Altium\AD25\Projects\Arribada\hardware-lib\DeviceSheets\Power\TPS63901_BuckBoost_lowIq_3V3_400m

ARRIBADA initiative

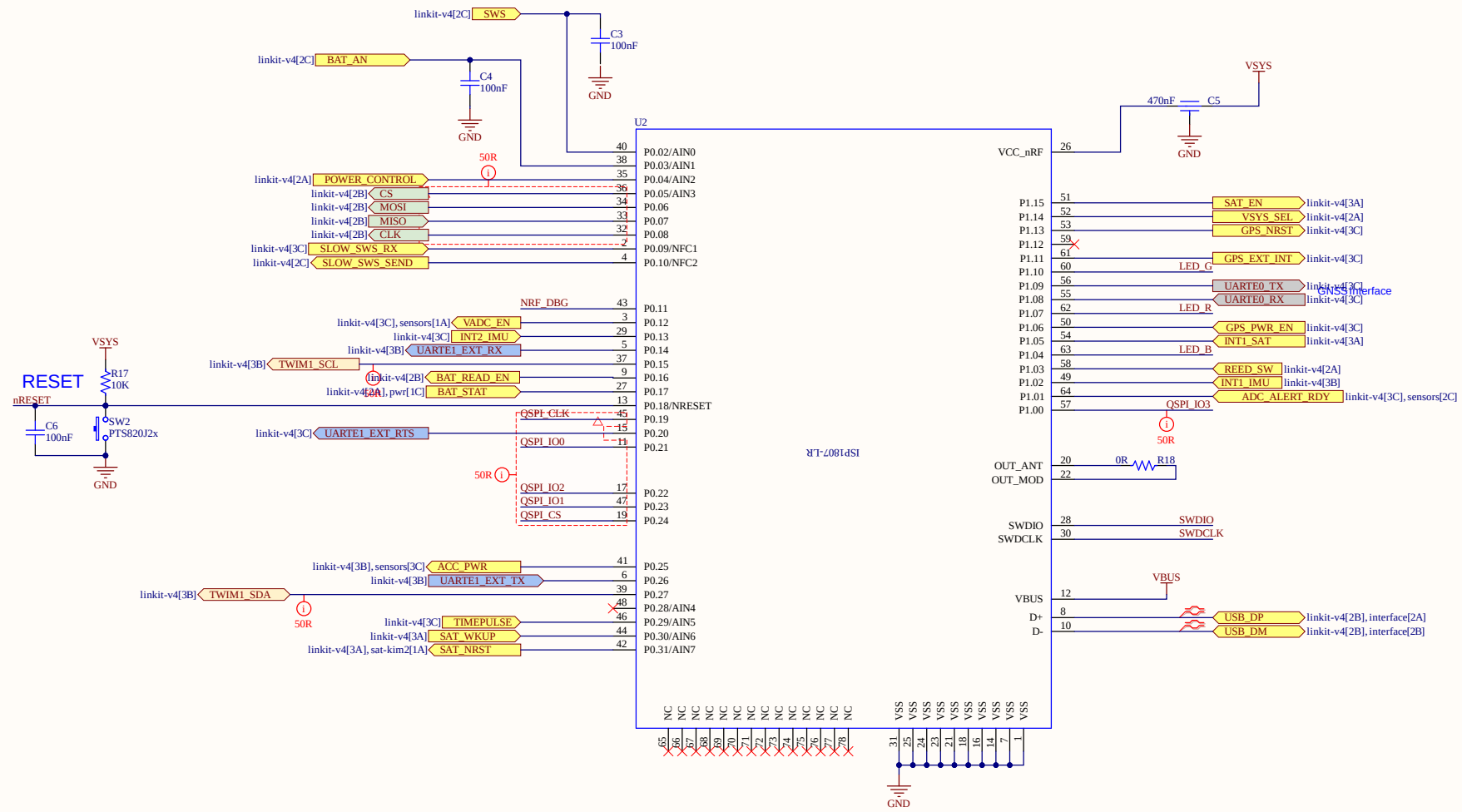

Flash Memory

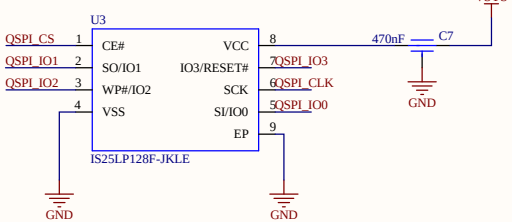

Probe connector

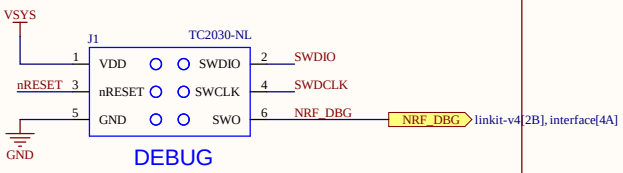

Status LED and apperture

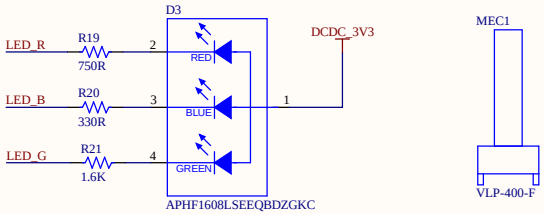

Title	*Linkit Kim/SMD*		*Arribada Initiative* *https://github.com/arribada* *contact@arribada.org* *arribada.org* *UK - Porthmouth*
Size: A3	Reference: linkit-v4	Revision: 0 1	
Date: 05/05/2025	Time: 12:13:24	Sheet 6 of 12	
File: C:\Users\fourn\Altium\AD25\Projects\Arribada\linkit-v4-hw\mcu.SchDoc			

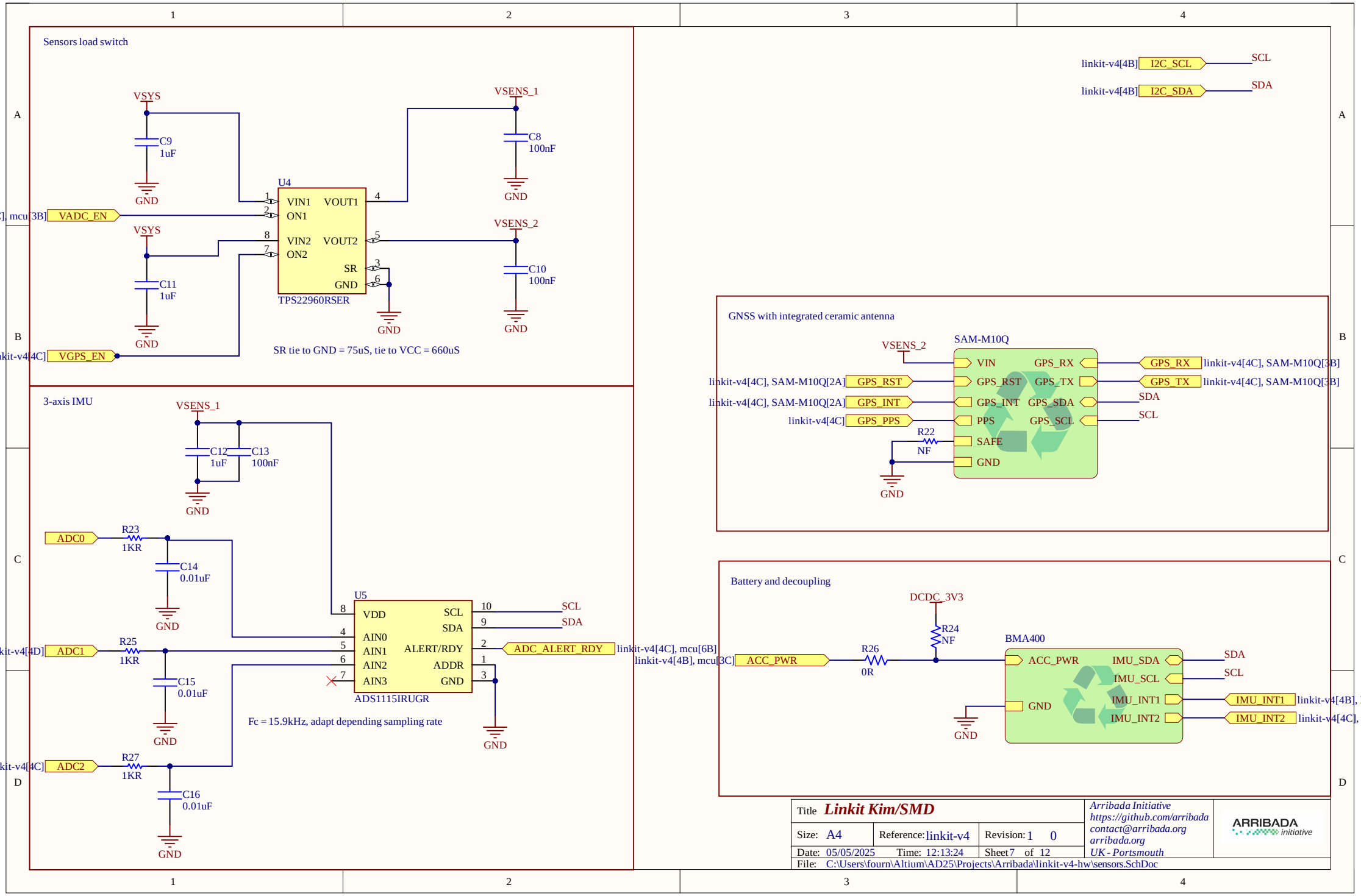
Sensors load switch
VSYS
C9
1uF
GND
U4
VIN1
ON1
VIN2
ON2
VOUT1
VOUT2
SR
GND
TPS22960RSER
VADC_EN
VSYS
C11
1uF
GND
VGPS_EN
VSENS_1
C8
100nF
GND
VSENS_2
C10
100nF
GND
SR tie to GND = 75uS, tie to VCC = 660uS
3-axis IMU
VSENS_1
C12
1uF
C13
100nF
GND
ADC0
R23
1KR
C14
0.01uF
GND
ADC1
R25
1KR
C15
0.01uF
GND
ADC2
R27
1KR
C16
0.01uF
GND
U5
VDD
AIN0
AIN1
AIN2
AIN3
SCL
SDA
ALERT/RDY
ADDR
GND
ADS1115IRUGR
SCL
SDA
ADC_ALERT_RDY
Fc = 15.9kHz, adapt depending sampling rate
GND
linkit-v4[4B]
I2C_SCL
SCL
linkit-v4[4B]
I2C_SDA
SDA
GNSS with integrated ceramic antenna
VSENS_2
SAM-M10Q
VIN
GPS_RST
GPS_INT
PPS
SAFE
GND
GPS_RX
GPS_TX
GPS_SDA
GPS_SCL
GPS_RST
GPS_INT
GPS_PPS
R22
NF
GND
GPS_RX
GPS_TX
SDA
SCL
Battery and decoupling
DCDC_3V3
R24
NF
BMA400
ACC_PWR
R26
0R
ACC_PWR
GND
IMU_SDA
IMU_SCL
IMU_INT1
IMU_INT2
SDA
SCL
IMU_INT1
IMU_INT2
GND
Title
Linkit Kim/SMD
Size: A4
Reference: linkit-v4
Revision: 1 0
Date: 05/05/2025
Time: 12:13:24
Sheet 7 of 12
File: C:\Users\fourn\Altium\AD25\Projects\Arribada\linkit-v4-hw\sensors.SchDoc
Arribada Initiative
https://github.com/arribada
contact@arribada.org
arribada.org
UK - Portsmouth
ARRIBADA
initiative

Accelerometer, Temperature Sensor
Accel I2C Address: 0010101

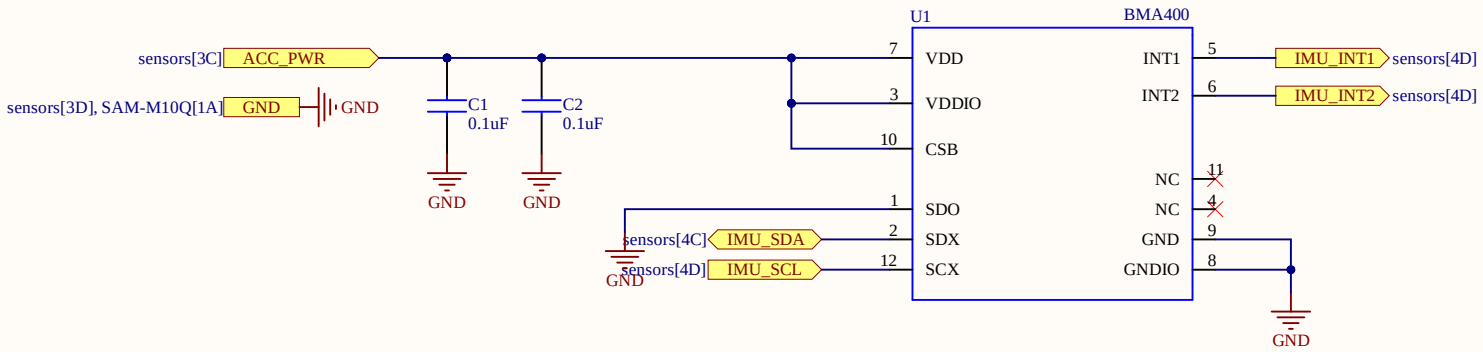

Title	**Linkit Kim/SMD**		*Arribada Initiative*
Size: A4	Reference: linkit-v4	Revision: 1 0	*https://github.com/arribada*
Date: 05/05/2025	Time: 12:13:24	Sheet 8 of 12	*contact@arribada.org*
			arribada.org
			UK - Portsmouth
File: C:\Users\fourn\Altium\AD25\Projects\Arribada\hardware-lib\DeviceSheets\SENSORS\BMA400_ACC_LinkitV3.SchDoc			

ARRIBADA initiative

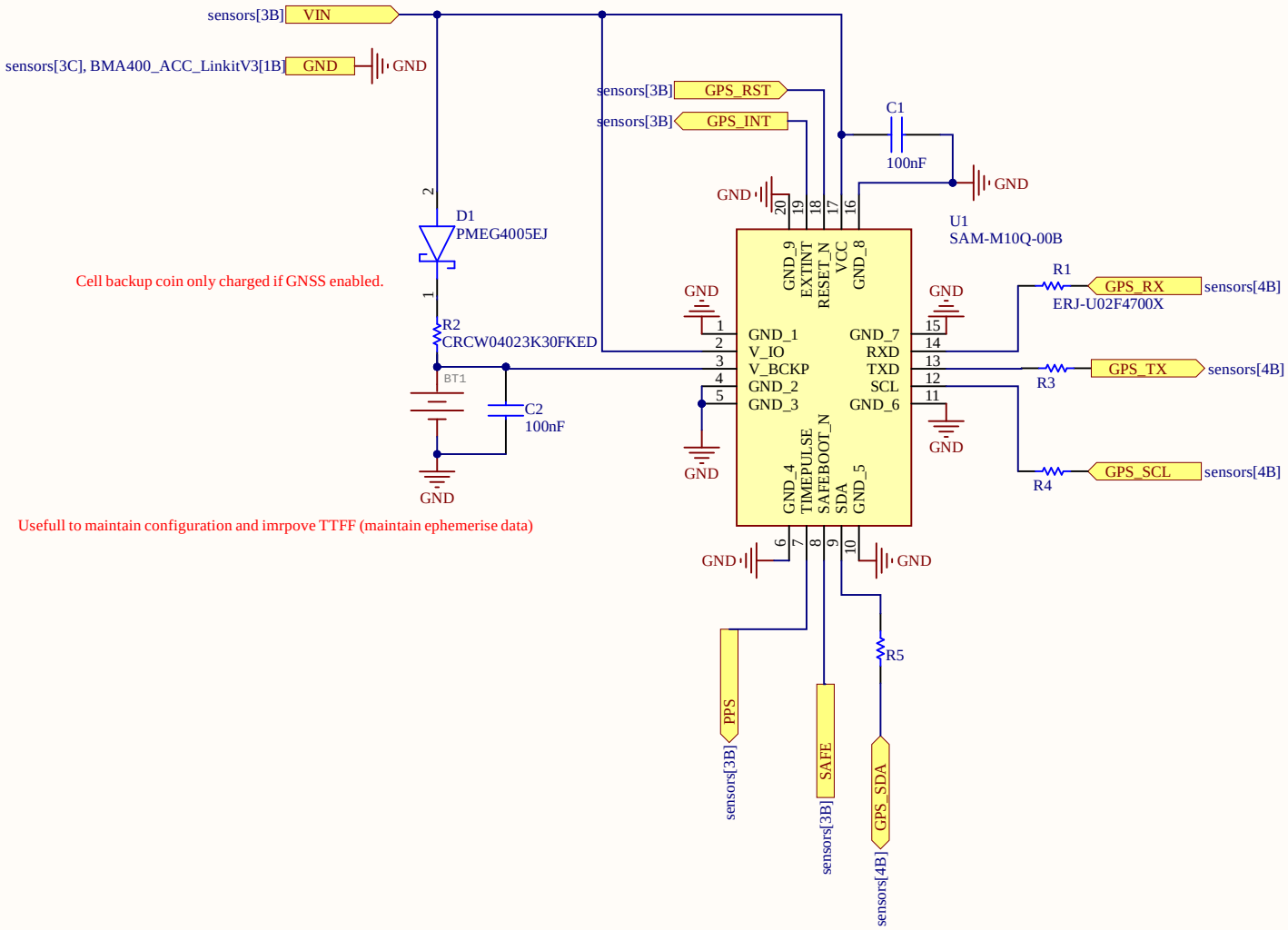

Title	***Linkit Kim/SMD***		*Arribada Initiative* *https://github.com/arribada* *contact@arribada.org* *arribada.org* *UK - Portsmouth*
Size: A4	Reference: linkit-v4	Revision: 1 0	
Date: 05/05/2025	Time: 12:13:25	Sheet 9 of 12	
File: C:\Users\fourn\Altium\AD25\Projects\Arribada\hardware-lib\DeviceSheets\GPS\SAM-M10Q.SchDoc			

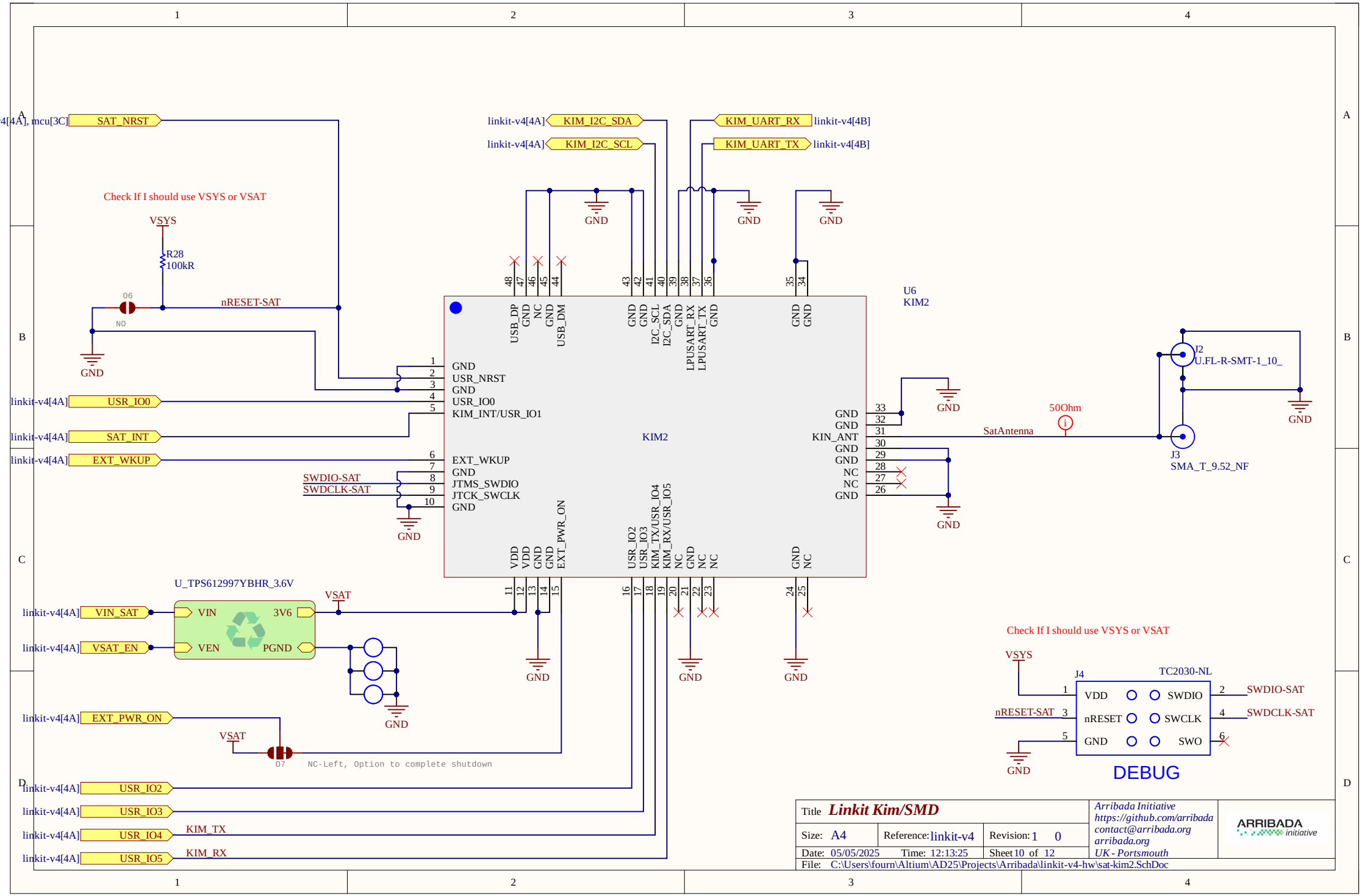
SAT_NRST
linkit-v4[4A]
KIM_I2C_SDA
KIM_I2C_SCL
KIM_UART_RX
KIM_UART_TX
linkit-v4[4B]
Check If I should use VSYS or VSAT
VSYS
R28
100kR
Q6
NO
nRESET-SAT
GND
USB_DP
USB_DM
I2C_SCL
I2C_SDA
LPUSART_RX
LPUSART_TX
U6
KIM2
USR_NRST
USR_IO0
KIM_INT/USR_IO1
USR_IO1
SAT_INT
EXT_WKUP
SWDIO-SAT
SWDCLK-SAT
JTMS_SWDIO
JTCK_SWCLK
KIN_ANT
SatAntenna
50Ohm
J2
U.FL-R-SMT-1_10_
J3
SMA_T_9.52_NF
VDD
EXT_PWR_ON
USR_IO2
USR_IO3
KIM_TX/USR_IO4
KIM_RX/USR_IO5
U_TPS612997YBHR_3.6V
VIN_SAT
VSAT_EN
VIN
VEN
3V6
PGND
VSAT
Q7
NC-Left, Option to complete shutdown
USR_IO2
USR_IO3
USR_IO4
USR_IO5
KIM_TX
KIM_RX
J4
TC2030-NL
VDD
nRESET
GND
SWDIO
SWCLK
SWO
DEBUG
Title
Linkit Kim/SMD
Size: A4
Reference: linkit-v4
Revision: 1 0
Date: 05/05/2025
Time: 12:13:25
Sheet 10 of 12
File: C:\Users\fourn\Altium\AD25\Projects\Arribada\linkit-v4-hw\sat-kim2.SchDoc
Arribada Initiative
https://github.com/arribada
contact@arribada.org
arribada.org
UK - Portsmouth
ARRIBADA
initiative

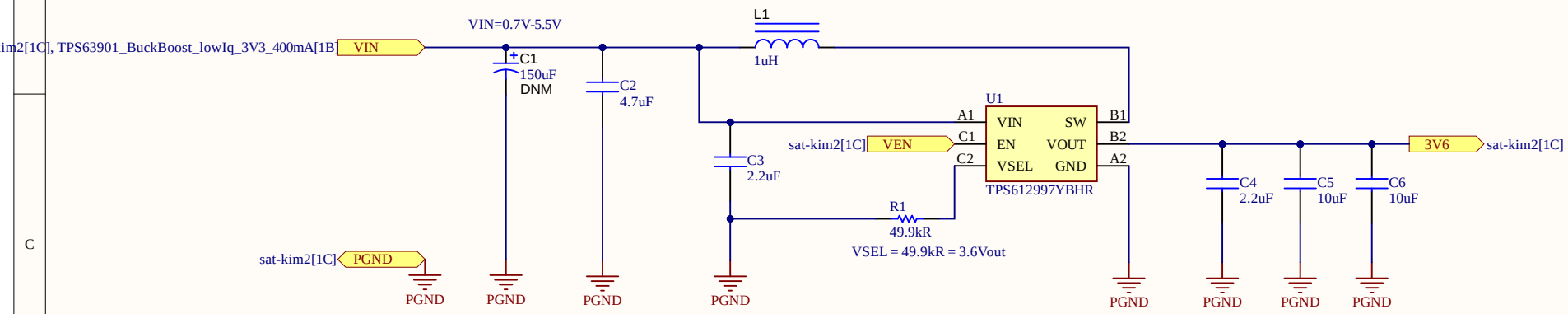
im2[1C], TPS63901_BuckBoost_lowIq_3V3_400mA[1B]
VIN
VIN=0.7V-5.5V
C1
150uF
DNM
C2
4.7uF
L1
1uH
U1
A1
VIN
SW
B1
C1
EN
VOUT
B2
C2
VSEL
GND
A2
TPS612997YBHR
sat-kim2[1C]
VEN
C3
2.2uF
R1
49.9kR
VSEL = 49.9kR = 3.6Vout
C4
2.2uF
C5
10uF
C6
10uF
3V6
sat-kim2[1C]
sat-kim2[1C]
PGND
PGND
PGND
PGND
PGND
PGND
PGND
PGND
PGND

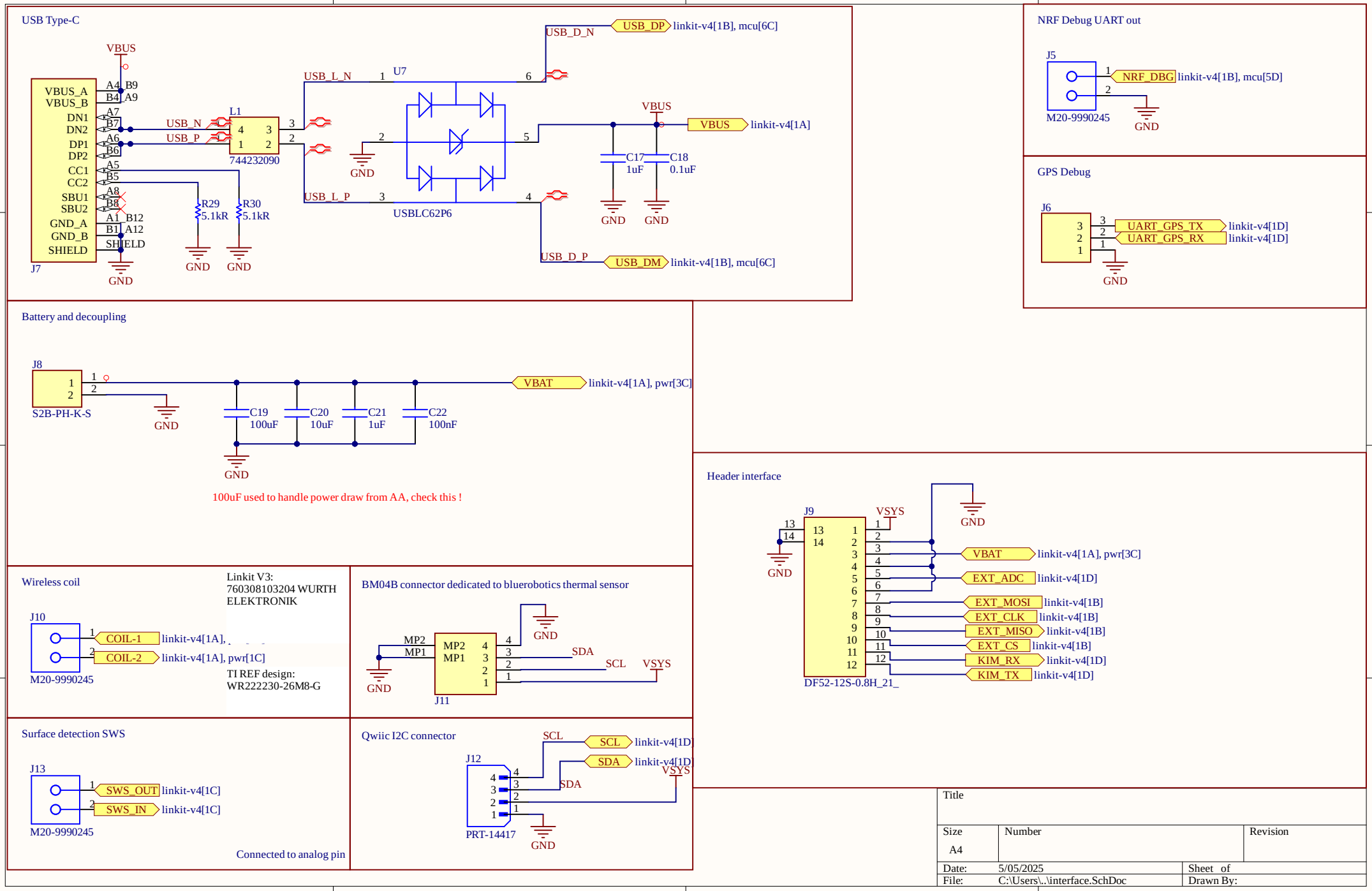
USB Type-C
VBUS
VBUS_A
VBUS_B
DN1
DN2
DP1
DP2
CC1
CC2
SBU1
SBU2
GND_A
GND_B
SHIELD
J7
USB_N
USB_P
L1
744232090
R29
5.1kR
R30
5.1kR
GND
USB_L_N
USB_L_P
U7
USBLC62P6
USB_D_N
USB_D_P
USB_DP
linkit-v4[1B], mcu[6C]
USB_DM
linkit-v4[1B], mcu[6C]
VBUS
linkit-v4[1A]
C17
1uF
C18
0.1uF
NRF Debug UART out
J5
M20-9990245
NRF_DBG
linkit-v4[1B], mcu[5D]
GPS Debug
J6
UART_GPS_TX
UART_GPS_RX
linkit-v4[1D]
Battery and decoupling
J8
S2B-PH-K-S
VBAT
linkit-v4[1A], pwr[3C]
C19
100uF
C20
10uF
C21
1uF
C22
100nF
100uF used to handle power draw from AA, check this !
Header interface
J9
DF52-12S-0.8H_21_
VSYS
VBAT
linkit-v4[1A], pwr[3C]
EXT_ADC
linkit-v4[1D]
EXT_MOSI
linkit-v4[1B]
EXT_CLK
linkit-v4[1B]
EXT_MISO
linkit-v4[1B]
EXT_CS
linkit-v4[1B]
KIM_RX
linkit-v4[1D]
KIM_TX
linkit-v4[1D]
Wireless coil
Linkit V3:
760308103204 WURTH
ELEKTRONIK
J10
M20-9990245
COIL-1
COIL-2
linkit-v4[1A], pwr[1C]
TI REF design:
WR222230-26M8-G
BM04B connector dedicated to bluerobotics thermal sensor
MP2
MP1
J11
SDA
SCL
VSYS
Surface detection SWS
J13
M20-9990245
SWS_OUT
SWS_IN
linkit-v4[1C]
Connected to analog pin
Qwiic I2C connector
J12
PRT-14417
SCL
SDA
linkit-v4[1D]
Title
Size
A4
Number
Revision
Date:
5/05/2025
Sheet of
File:
C:\Users\..\interface.SchDoc
Drawn By:

Bill of Materials

Project Title: Bill of Materials for Project [linkit-v4-hw.PrjPcb] (No PCB Document Selected)
Project File Name: linkit-v4-hw.PrjPcb
Assembly Variant: None

ARRIBADA initiative

https://arribada.org/
https://github.com/arribada
contact@arribada.org
Cell Block Studios
College Rd
Portsmouth, PO1 3LJ

Part Number	Description	Designator	Manufacture	Manufacture Part Number	Supplier	Supplier Part Number	Supplier Unit Price	Quantity
RELOWABLE_BAT	SEIKO Reflowable Lithium Batteries	BT1						1
GRM155R61E105	Multilayer Ceramic Capacitors MLCC - SMD/SMT 1 uF 25 VDC 10% 0402 X5R	C1, C21						2
GCM188R71C105	Multilayer Ceramic Capacitors MLCC - SMD/SMT 1 uF 16 VDC 10% 0603 X7R AEC-Q200	C2						1
CAP CER 100NF 02	CAP CER 100NF 0201 35V 10% X5R	C3, C4, C6			Mouser	81-GRM33R6YA104KE14D		3
CAP FEEDTHRU 47	CAP FEEDTHRU 470NF 0402 6.3V +50%/-20%	C5, C7			Mouser	810-CKD710JB0J474S		2
GRM155R71C104	Multilayer Ceramic Capacitors MLCC - SMD/SMT 0.1 uF 16 VDC 10% 0402 X7R	C8, C10, C13, C22, C27	Murata	GRM155R71C104KA88D	Mouser	81-GRM155R71C104KA88		5
GRM155Z71A105	Multilayer Ceramic Capacitors MLCC - SMD/SMT 1.0UF 10V 10% 0402	C9, C11, C12	Murata	GRM155Z71A105KE01J	Mouser	81-GRM155Z71A105KE1J		3
GRM1555CYA103	Multilayer Ceramic Capacitors MLCC - SMD/SMT 0.01 uF 35 VDC 2% 0402 C0G (NP0)	C14, C15, C16						3
CL03A105KP3NSN	Multilayer Ceramic Capacitors MLCC - SMD/SMT 1uF+/-10% 10V X5R 06 0201	C17						1
GRM033Z71C104	Multilayer Ceramic Capacitors MLCC - SMD/SMT .1UF 16V 10% 0201	C18, C43, C44, C45, C46	Murata	GRM033Z71C104KE14D	Mouser	81-GRM033Z71C104KE4D		5
GRM31CR61A107	Multilayer Ceramic Capacitors MLCC - SMD/SMT 100 uF 10 VDC 20% 1206 X5R	C19						1
GRM155R61A106	Multilayer Ceramic Capacitors MLCC - SMD/SMT 10 uF 10 VDC 20% 0402 X5R	C20, C41, C42						3
GRM188R71E474	Multilayer Ceramic Capacitors MLCC - SMD/SMT 0.47 uF 25 VDC 10% 0603 X7R	C23, C36						2
GRM155R71H683	Multilayer Ceramic Capacitors MLCC - SMD/SMT 0.068 uF 50 VDC 20% 0402 X7R	C24						1
GRM155R71E223	Multilayer Ceramic Capacitors MLCC - SMD/SMT 0.022 uF 25 VDC 10% 0402 X7R	C25, C35						2
EMK107BBJ106M	Multilayer Ceramic Capacitors MLCC - SMD/SMT 963-MSASE168BB5106MT RPLCMT PN 16V 10uF X5R 0603 20%	C26, C30	Murata	GCM1555C1H8R2CA16J	Mouser	81-GCM1555C1H8R2CA6J		2
GRM188R71H103	Multilayer Ceramic Capacitors MLCC - SMD/SMT .01UF 50V 10% 0603	C28						1
GRM155R71E103	Multilayer Ceramic Capacitors MLCC - SMD/SMT 0.01 uF 25 VDC 10% 0402 X7R	C29, C34						2
GRM188R61C475	Multilayer Ceramic Capacitors MLCC - SMD/SMT 4.7 uF 16 VDC 10% 0603 X5R	C31						1
GRM155R71H681	Multilayer Ceramic Capacitors MLCC - SMD/SMT 680 pF 50 VDC 10% 0402 X7R	C32						1
GRM033R71E271	Multilayer Ceramic Capacitors MLCC - SMD/SMT 270 pF 25 VDC 10% 0201 X7R	C33						1
T495D157K010AT	Tantalum Capacitors - Solid SMD 10V 150uF 2917 10% ESR=100mOhms	C37			Digi-Key	399-8506-1-ND		1
GRM188Z71A475	Multilayer Ceramic Capacitors MLCC - SMD/SMT 4.7 uF 10 VDC 20% 0603 X7R	C38			Digi-Key			1
GRM155R61A225	Multilayer Ceramic Capacitors MLCC - SMD/SMT 2.2 uF 10 VDC 20% 0402 X5R	C39, C40						2
GRM188R61A106	Multilayer Ceramic Capacitors MLCC - SMD/SMT 10 uF 10 VDC 20% 0603 X5R	C47						1
GRM188R61A226	Multilayer Ceramic Capacitors MLCC - SMD/SMT 22 uF 10 VDC 20% 0603 X5R	C48						1
RB751S40	Schottky Diodes & Rectifiers 40V,Schottky,SOD-523,0.3A	D1						1
LED RGB 0603 2M	LED RGB 0603 2MA	D2, D3			Mouser	604-APHF1608LQBDZGKC		2
PMEG4005EJ	Schottky Diodes & Rectifiers	D4						1
TC2030-NL	CON PLUG OF NAILS 6 PIN FOOTPRINT NO LEGS	J1, J4				NOT FITTED PART		2
U.FL-R-SMT-1_10	UFL SMT PCB receptable,DC-6GHz Hirose Straight 50 Surface Mount UFL Connector, Receptacle, Solder Termination Coaxial	J2	Hirose	U.FL-R-SMT-1(10)	Mouser	798-U.FL-R-SMT-110		1
SMA_T_9.52_NF	SMA End Launch Jack 1.0 mm Board, 50 ohm	J3						1
USB4215-03-A_RE	USB Connectors USB C Receptacle, Short Body, USB2.0, 16Pin, Horizontal, SMT	J5						1
S2B-PH-K-S	Headers & Wire Housings PH HEADER (SIDE)	J6						1
860-10-003-10-00	Connector, Header 3 pos, 1 row, pitch 1mm	J7						1
M20-9990245	CON HDR 2POS HEADER 2.54MM VERT THRU HOLE	J8, J9, J12			Digi-Key	952-2261-ND		3
BM04B-GHS-TBT	Headers & Wire Housings GH HEADER (SMT/TOP TYPE)	J10						1
PRT-14417	QWIIC JST CONNECTOR - SMD 4-PIN	J11						1
DF52-12S-0.8H_21	Headers & Wire Housings Recep 12P R/A 0.8mm Pitch	J13						1
744232090	Common Mode Chokes / Filters WE-CNSW 1206 370mA 90Ohm 100MHz AECQ200	L1						1
XEL4020-102MEC	Power Inductors - SMD 1uH Shld 20% 9.6A 14.6mOhms AECQ2	L2						1
DFE252012F-2R2M	Inductor Power Chip Shielded Wirewound 2.2uH 20% 1MHz Metal 2.3A 0.082Ohm DCR 1008 T/R	L3			Mouser	81-DFE252012F-2R2MP2		1
VLP-400-F	LIGHT PIPE 10.2mm High Flat Face	MEC1			Digi-Key	492-1516-ND		1
JUMPER-SMT_2_N	Normally opened trace jumper This jumper has no trace between two pads so it's normally closed (NO).	O1, O5, O6						3
JUMPER-SMT_2_N	Normally opened trace jumper This jumper has no trace between two pads so it's normally closed (NO).	O2						1
JUMPER-SMT_2_N	Normally closed trace jumper This jumper has a trace between two pads so it's normally closed (NC). Use a razor knife to open the connection. For best results follow the IPC guidelines for cutting traces: Cutout at least 0.063 mm (0.005 in). Remove all loose material to clean up the cut area. Seal the cut with an approved epoxy. Reapply solder to reclose the connection.	O3, O4, OPT1						3
JUMPER-SMT_3_2	Normally opened lefttrace jumper (1 of 2 connections) This jumper has a trace between left pad pads so they are normally closed (NC). Use a razor knife to open the connection(s). For best results follow the IPC guidelines for cutting traces: Cutout at least 0.063 mm (0.005 in). Remove all loose material to clean up the cut area. Seal the cut with an approved epoxy. Reapply solder to reclose the connection(s).	O7						1
MMBT3904LT1G	Bipolar Transistors - BJT NPN GENERAL PURPOSE	Q1						1
DMP2305U-7	MOSFET P-CHANNEL ENHANCEMENT MODE	Q2						1
IRLML6401TRPBF	MOSFETs MOSFT P-Ch -4.3A 50mOhm 10nC Log Lvl	Q3, Q4						2
CSD75208W1015	MOSFETs 20V P-channel NexFET Pwr MOSFET A 595-CSD75208W1015T	Q5						1
RES 4.7K 0201 1%	RES 4.7K 0201 1% 100PPM	R1, R2			Mouser	71-CRCW02014K70FKED		2
CRCW02011K00F	Thick Film Resistors - SMD 1/20watt 1Kohms 1% 200ppm	R3, R23, R25, R27						4
CRCW040210K0J	Thick Film Resistors - SMD 1/16watt 10Kohms 5% Commercial Use	R4			Mouser	71-CRCW040210K0JNEDC		1
RT0805BRD071M	Thin Film Resistors - SMD 1/8W 1.33M Ohms 0.1%	R5						1
RGV3216P-3004-B	Thin Film Resistors - SMD Thin Film Chip Resistors 1206 size, 700V, 0.25W, 3.0M ohm, 0.1%, 25ppm AEC Q200	R6						1
RES 10M 0402 1%	RES 10M 0402 1% 100PPM	R7, R9			Mouser	603-RC0402FR-0710ML		2
RC0201FR-7D1ML	Thick Film Resistors - SMD 1 MOhms 50 mW 0201 1%	R8, R10						2
ERJ-U02F1002X	Thick Film Resistors - SMD 0402 1% 10Kohm Anti-Sulfur AEC-Q200	R11						1
CRCW0201383RF	Thick Film Resistors - SMD 383ohm 1% 200ppm	R12						1
CRCW020127K4F	Thick Film Resistors - SMD 27.4Kohm 1% 200ppm	R13						1
RC0402JR-7D1KL	Thick Film Resistors - SMD 1 kOhms 62.5 mW 0402 5%	R14						1
RC0402JR-7D330R	Thick Film Resistors - SMD 330 Ohms 62.5mW 0402 5%	R15						1
CRCW04021K60J	Thick Film Resistors - SMD 1/16watt 1.6Kohms 5%	R16						1
RES 10K 0201 1%	RES 10K 0201 1% 100PPM	R17			Mouser	71-CRCW020110K0FKED		1
RES 0R 0201	RES 0R 0201	R18			Mouser	71-CRCW02010000Z0ED		1
RES 750R 0201 1%	RES 750R 0201 1% 100PPM	R19			Mouser	71-CRCW0201750RFKED		1
RES 330R 0201 1%	RES 330R 0201 1% 100PPM	R20			Mouser	71-CRCW0201330RFKED		1
RES 1.6K 0201 1%	RES 1.6K 0201 1% 100PPM	R21			Mouser	71-CRCW02011K60FKED		1
RES-NC-0402	Generic Resistor, Not Fitted	R22						1
RES NF 0402	RES NF 0402	R24			Mouser			1
RES 0R 0402	RES 0R 0402	R26			Mouser	603-RC0402JR-070RL		1
CRCW0201100KJ	Thick Film Resistors - SMD 1/20watt 100Kohms 5% 200ppm	R28						1
CRCW02015K10J	Thick Film Resistors - SMD 1/20watt 5.1Kohms 5% 200ppm	R29, R30						2
CRCW04020000Z0	Thick Film Resistors - SMD CRCW 402 jumper	R31						1
CRCW020120K0F	Thick Film Resistors - SMD 1/20watt 20Kohms 1% 100ppm	R32						1
RC0201FR-7D10K	Thick Film Resistors - SMD 10 kOhms 50 mW 0201 1%	R33						1
CRCW0201453RF	Thick Film Resistors - SMD 1/20watt 453ohms 1% 100ppm	R34						1
CRCW0201196RF	Thick Film Resistors - SMD 1/20watt 845ohms 1% 100ppm	R35						1
CRCW040249K9F	Thick Film Resistors - SMD 1/16watt 49.9Kohms 1%	R36						1
ERJ-U02F4700X	Thick Film Resistors - SMD 1/20watt 470ohms 1% 200ppm	R37, R39						2
CRCW04023K30F	Thick Film Resistors - SMD 1/16watt 3.3Kohms 1% 100ppm	R38						1
ERJ-U02F22R0X	Thick Film Resistors - SMD 1/20watt 22ohms 1% 200ppm	R40, R41						2
CRCW020136K5F	Thick Film Resistors - SMD 36.5Kohm 1% 200ppm	R42						1
RC0201FR-070RL	Thick Film Resistors - SMD 0 Ohms 50mW 0201 1%	R43						1
CRCW02012K74F	Thick Film Resistors - SMD 1/20W 2.74Kohms 1% 200ppm	R44						1
CT8132BV-IS3	Board Mount Hall Effect/Magnetic Sensors Integrated Digital Omnipolar, TMR, High Sensitivity Magnetic Switch, SOT23 Package, Ind Temp, 2Hz	SW1						1
PTS820J2x	SW SPST PB 50MA 12V SMT CK variant	SW2			Mouser	611-PTS820J25MSMTR		1
BQ25176MDSGR	Battery Management 800-mA linear batter y charger for one-ce	U1						1
ISP1807-LR	IC ISP Smart Bluetooth Module	U2			Rutronik	ISP1807-LR-ST	$8,50	1
IS25LP128F-JKLE	IC MEM SERIAL NOR FLASH QSPI 128Mb/16MB 3.6V 166MHz WSON8 6X5	U3			Farnell	2901145		1
TPS22960RSER	Power Switch ICs - Power Distribution Low Input VTG Dual L oad Switch	U4						1
ADS1115IRUGR	Analog to Digital Converters - ADC 16B ADC w/ Int MUX P GA Comp Osc & Ref A	U5						1
KIM2	KIM2 Module 48 pins 1.27mm pitch 36.6 x 25.4 x 5mm	U6						1
USBLC62P6	ESD Suppressors / TVS Diodes High Speed Interface Protection Low Cap	U7						1
BQ51003YFPT	Wireless Charging ICs Wireless Pwr Receivr A 595-BQ51003YFPR	U8						1
TPS612997YBHR	Switching Voltage Regulators 95-nA low IQ 5.5-V b oost converter with INLIMIT (1.9A)	U9						1
BMA400	IC AXL Accel/temp SPI/I2C 12LGA	U10			Digi-Key	828-1081-1-ND		1
SAM-M10Q-00B	GNSS / GPS Modules u-blox M10 GNSS antenna module ROM, TCXO, SAW, LNA LGA, 16x16 mm	U11						1
TPS63901YCJR	Integrated Circuit	U12						1
							$8,50	141

Approved	Notes