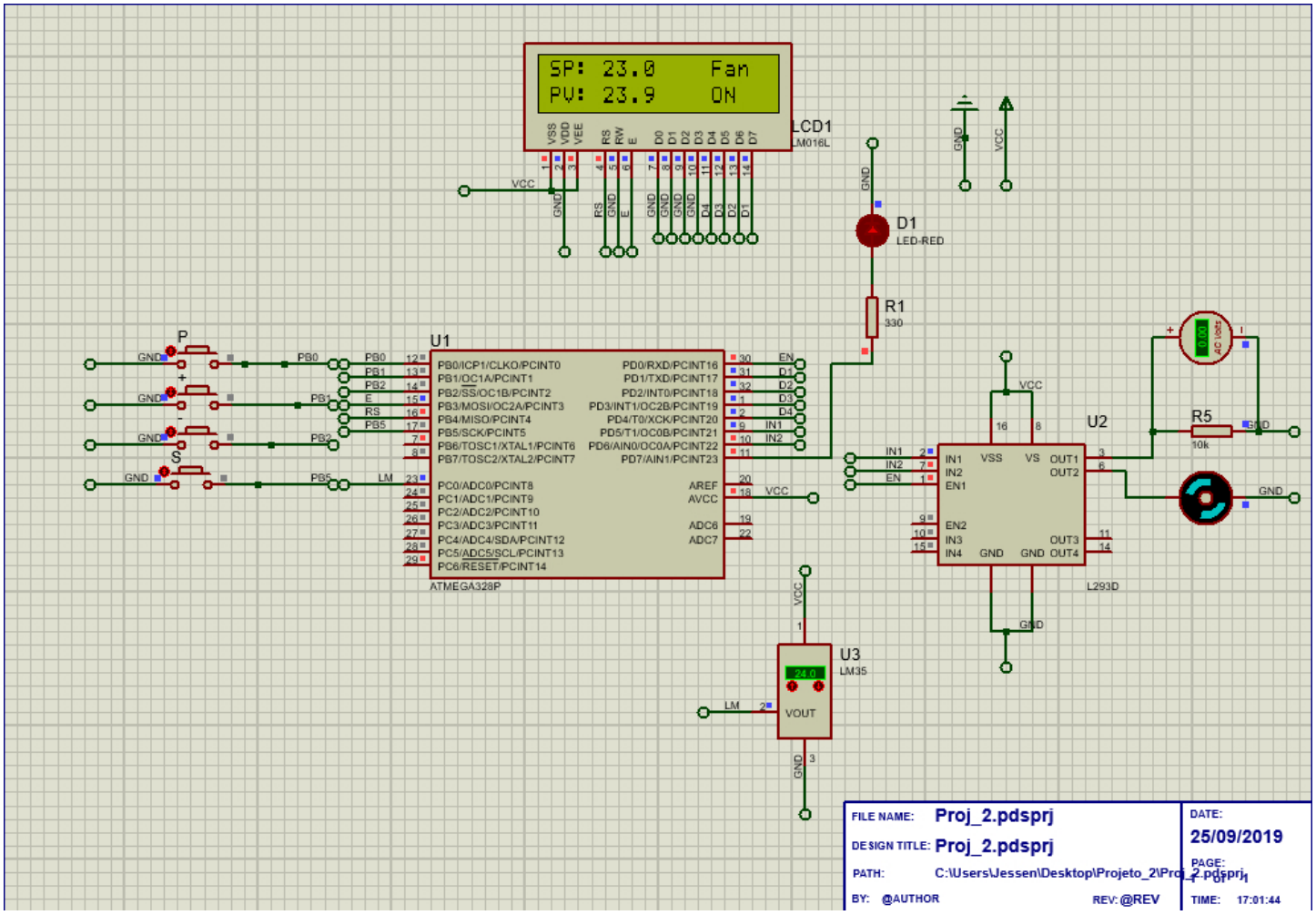
SP: 23.0 Fan
PV: 23.9 ON
LCD1
LM016L
D1
LED-RED
R1
330
U1
ATMEGA328P
U2
L293D
R5
10k
U3
LM35
FILE NAME: Proj_2.pdsprj
DESIGN TITLE: Proj_2.pdsprj
PATH: C:\Users\Jessen\Desktop\Projeto_2\Proj_2.pdsprj
BY: @AUTHOR
REV: @REV
DATE: 25/09/2019
PAGE: 1 of 1
TIME: 17:01:44