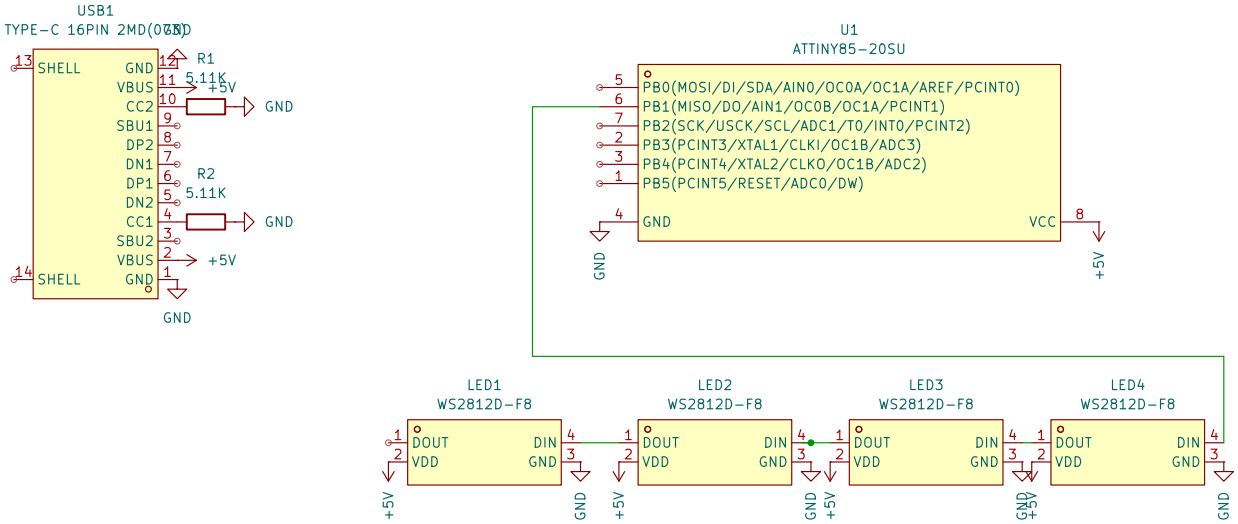
USB1
TYPE-C 16PIN 2MD(073)
SHELL
GND
VBUS
CC2
SBU1
DP2
DN1
DP1
DN2
CC1
SBU2
VBUS
SHELL
GND
R1
5.11K
R2
5.11K
+5V
GND
U1
ATTINY85-20SU
PB0(MOSI/DI/SDA/AIN0/OC0A/OC1A/AREF/PCINT0)
PB1(MISO/DO/AIN1/OC0B/OC1A/PCINT1)
PB2(SCK/USCK/SCL/ADC1/T0/INT0/PCINT2)
PB3(PCINT3/XTAL1/CLKI/OC1B/ADC3)
PB4(PCINT4/XTAL2/CLKO/OC1B/ADC2)
PB5(PCINT5/RESET/ADC0/DW)
GND
VCC
LED1
WS2812D-F8
LED2
WS2812D-F8
LED3
WS2812D-F8
LED4
WS2812D-F8
DOUT
VDD
DIN
GND