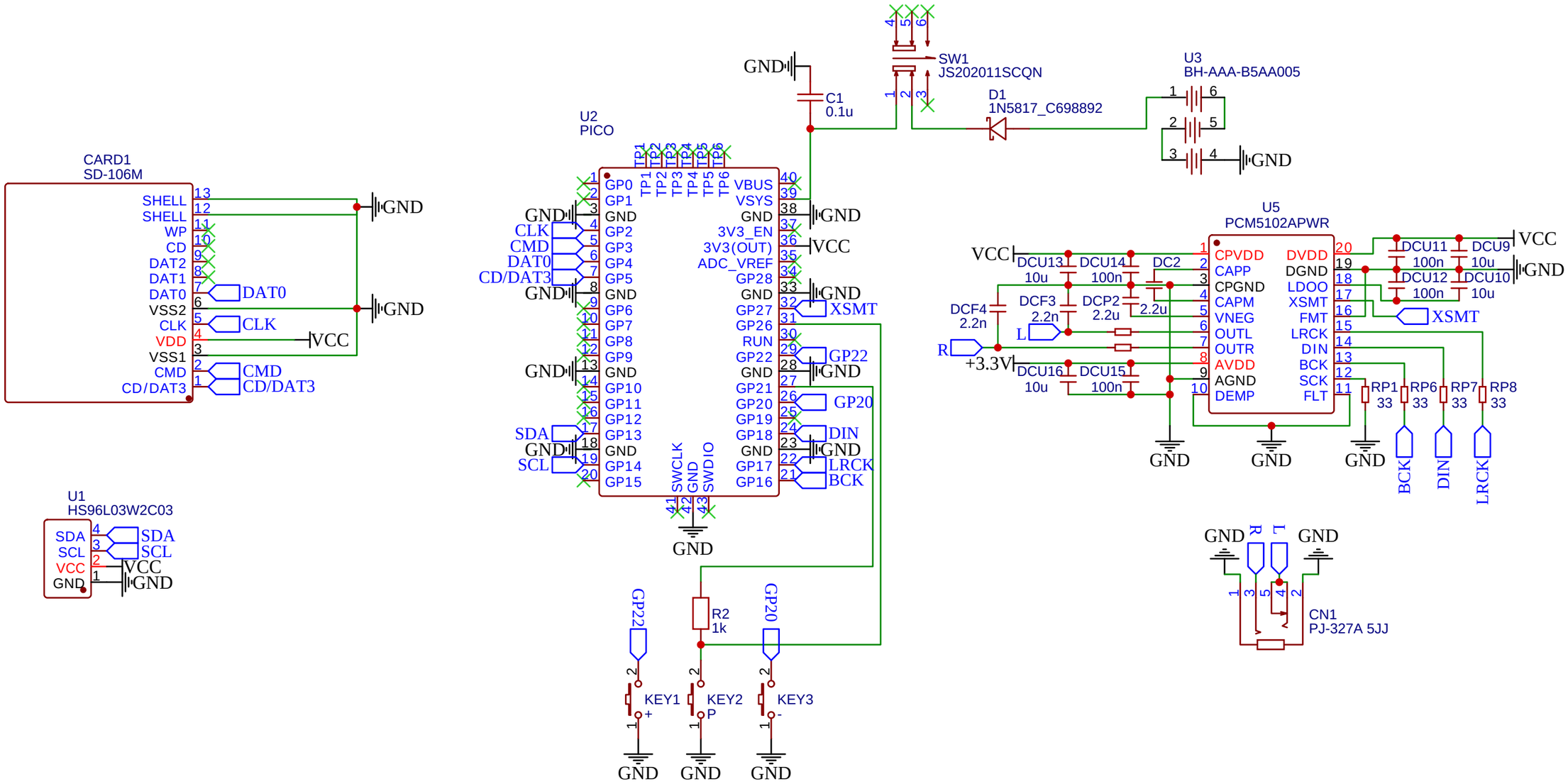


| | |
|---|---|
| TITLE: Sheet_1 | REV: 1.0 |
| EasyEDA | Company: Your Company |
| | Sheet: 1/1 |
| | Date: 2024-05-15 Drawn By: forcontact.we |