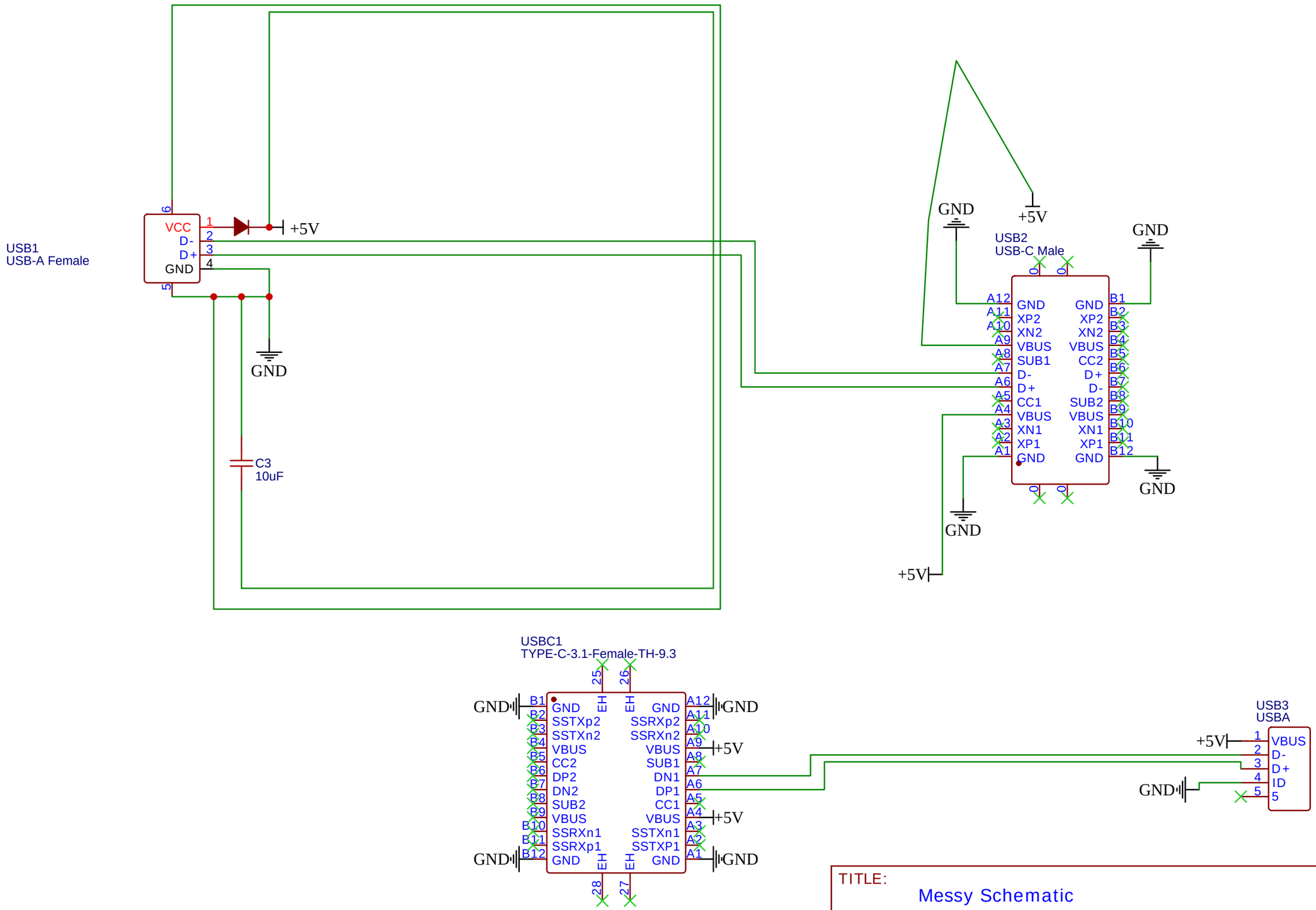

TITLE: Messy Schematic

REV: 1.0

Company: Usb Creator

Sheet: 1/1

Date: 2024-03-07

Drawn By: bajajshaunak