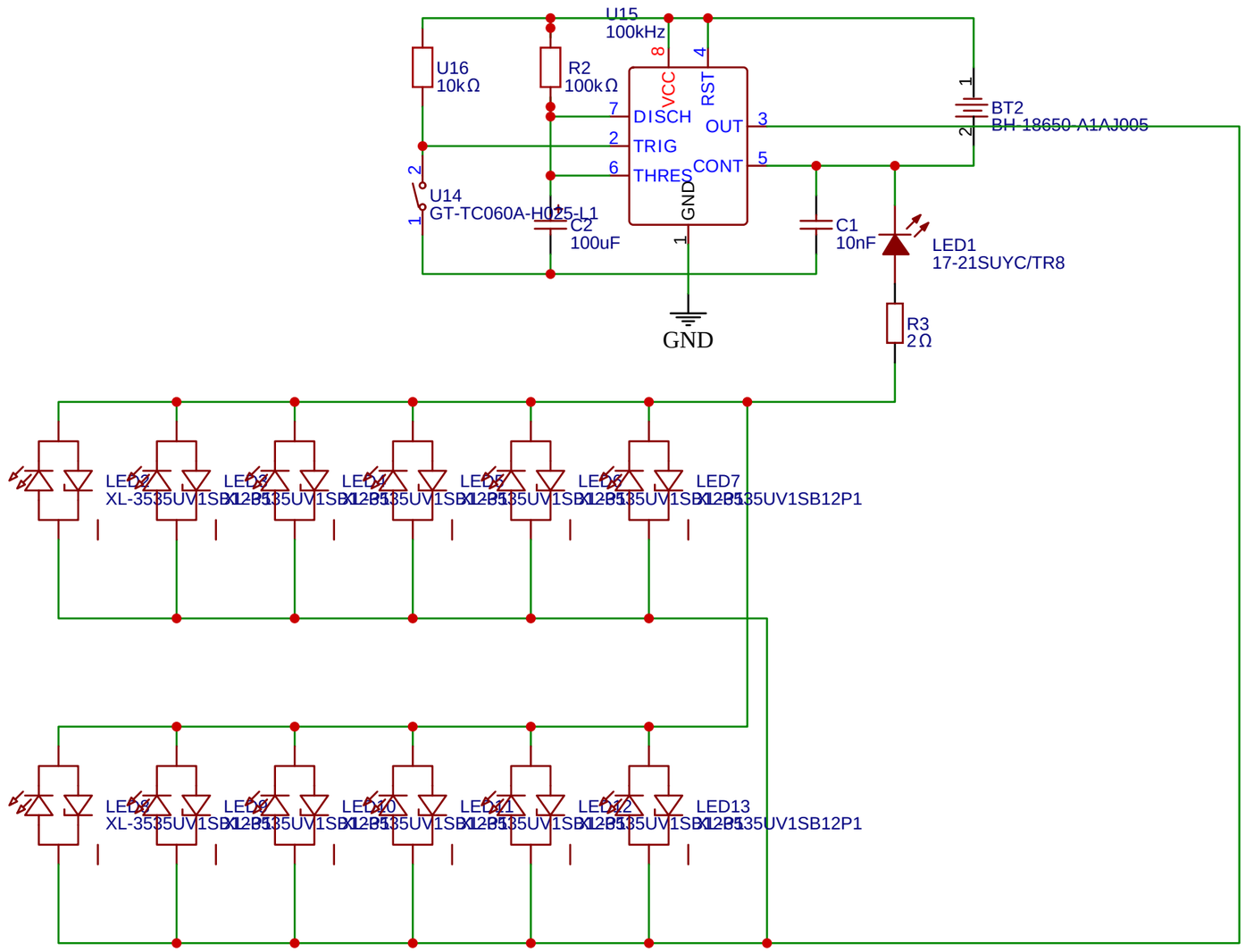

TITLE: The Trail UV Water Bottle!		REV: 1.0
EasyEDA	Company: Your Company	Sheet: 1/1
	Date: 2024-04-25 Drawn By: john.tanaristy	