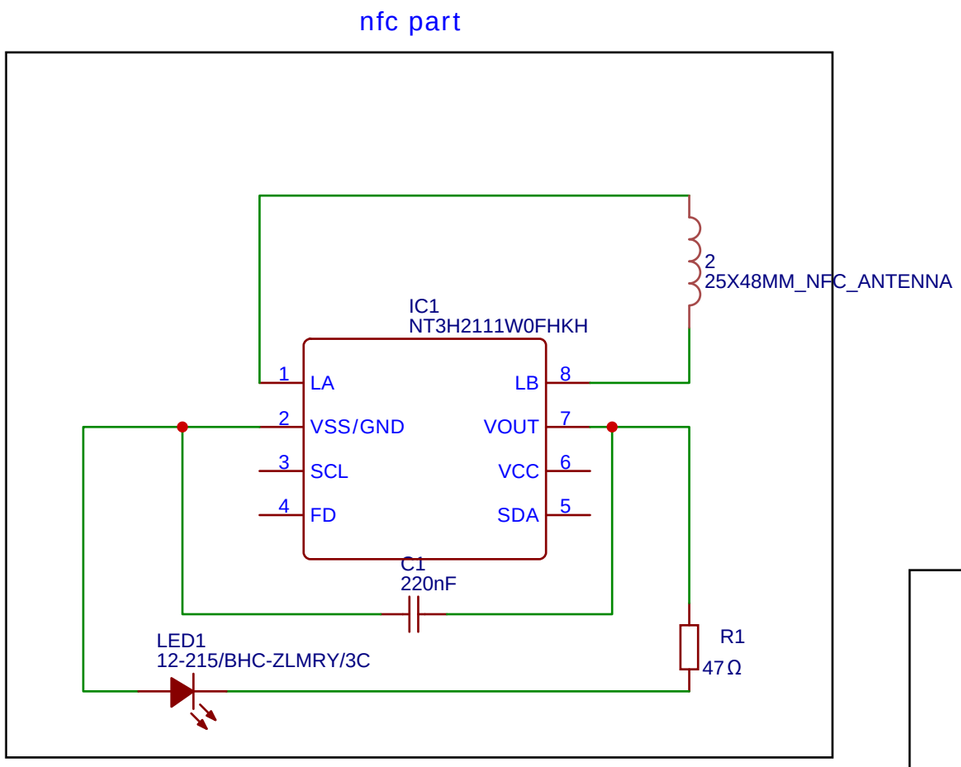

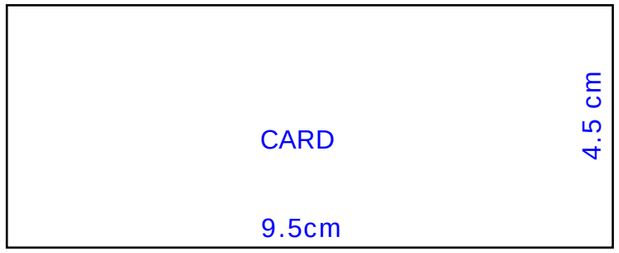

features:

nfc transmission
can run a game
play video
looks cool

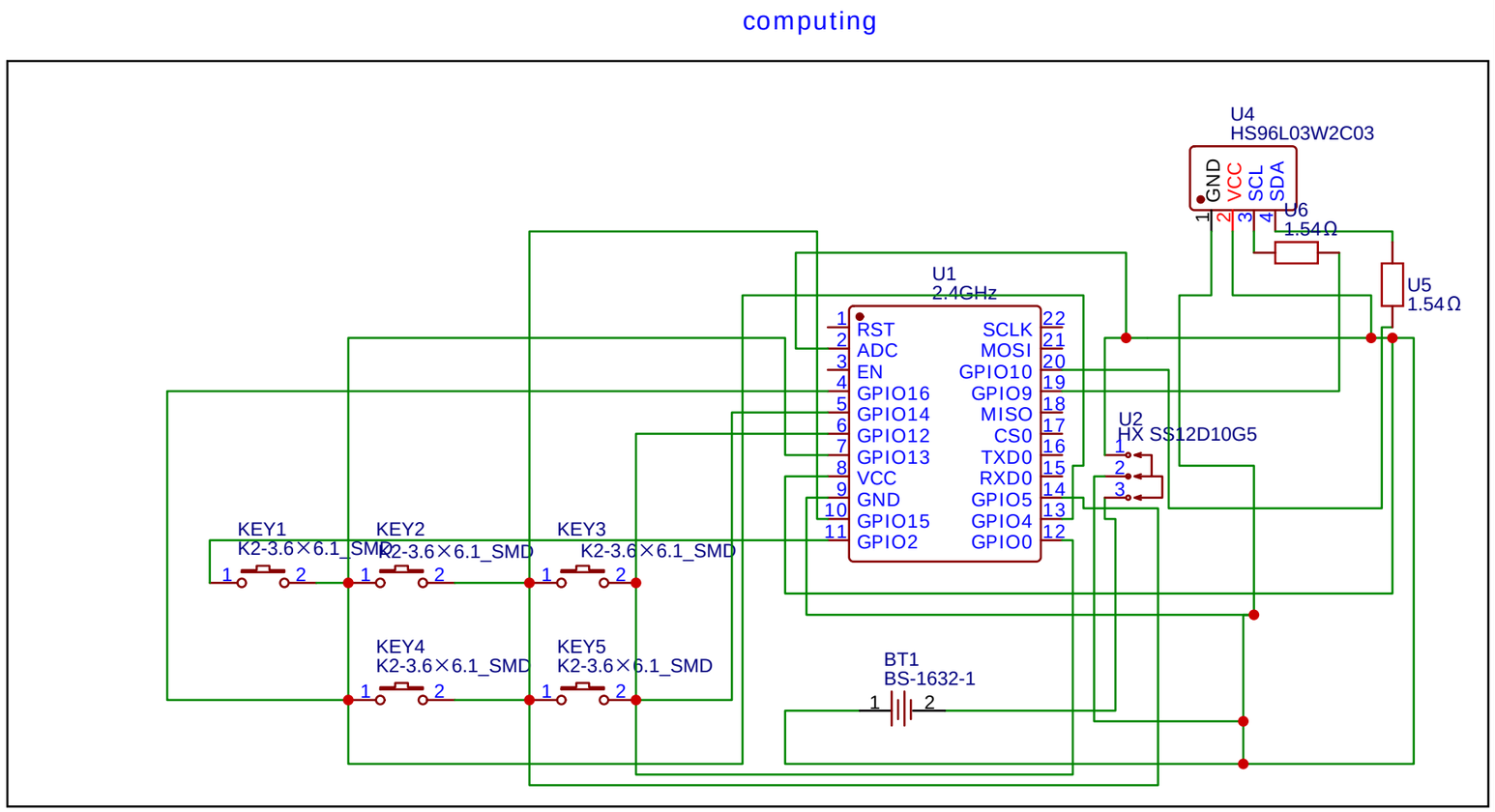

TITLE: pcb_busniness card		REV: 1.0
	Company: Your Company	Sheet: 1/1
	Date: 2024-07-21 Drawn By: ministermonkeya1	

nfc part

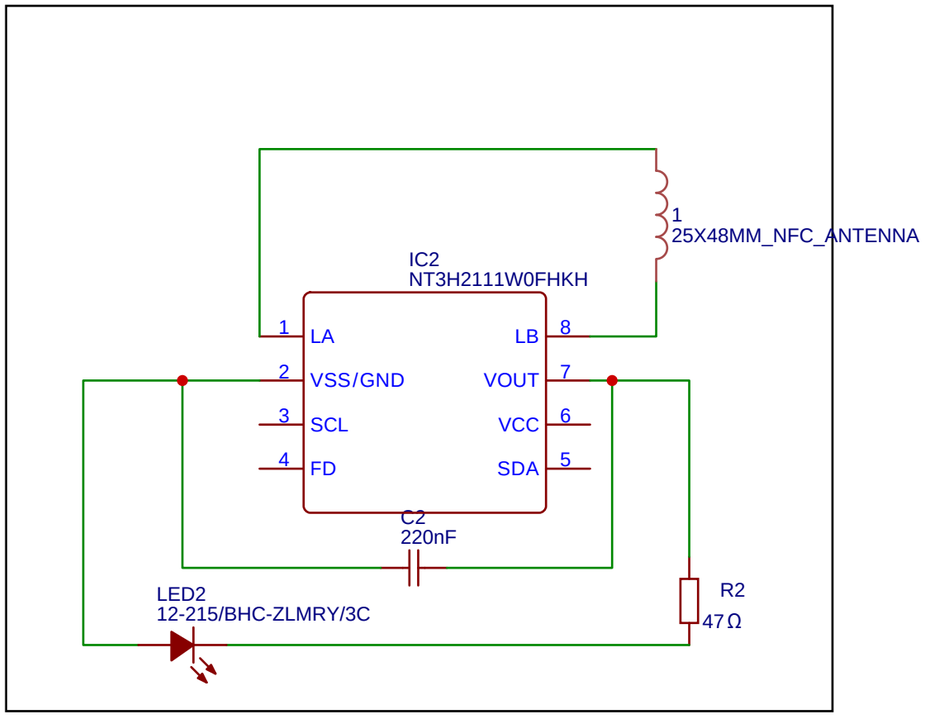

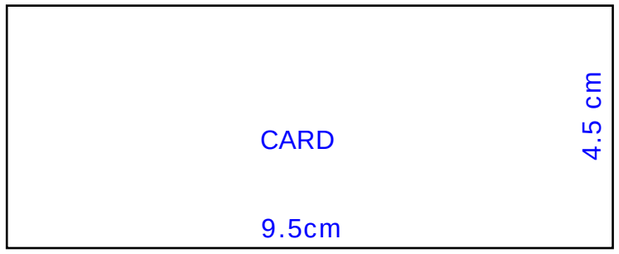

features:

nfc transmission
can run a game
play video
looks cool

TITLE: pcb_busniness card		REV: 1.0
	Company: Your Company	Sheet: 1/1
	Date: 2024-07-21 Drawn By: ministermonkeya1	