Accident Analysis and Prevention 209 (2025) 107830

Contents lists available at ScienceDirect

Accident Analysis and Prevention

journal homepage: www.elsevier.com/locate/aap

Predicting lane change maneuver and associated collision risks based on multi-task learning

Liu Yang [a], Jike Zhang [a], Nengchao Lyu [b,c,*], Qianxi Zhao [a]

[a] School of Transportation and Logistics Engineering, Wuhan University of Technology, Wuhan 430063, China
[b] Intelligent Transportation Systems Research Center, Wuhan University of Technology, Wuhan 430063, China
[c] Engineering Research Center of Transportation Information and Safety, Ministry of Education, Wuhan, 430063, China

ARTICLE INFO

Keywords:
Lane change prediction
Lane change risk prediction
Multi-Task learning
CNN-LSTM

ABSTRACT

The lane-changing (LC) maneuver of vehicles significantly impacts highway traffic safety. Therefore, proactively predicting LC maneuver and associated collision risk is of paramount importance. However, most of the previous LC risk prediction research overlooks the prediction of LC maneuver, limiting its practical utility. Furthermore, the effectiveness of LC maneuver recognition tends to be moderate as the prediction horizon extends. To fill the gaps, this paper proposes a multi-task learning model that simultaneously predicts the probability of LC maneuver, LC risk level, and time-to-lane-change (TTLC), while further analyzing the intrinsic correlation between LC maneuver and LC risk. The model consists of a Convolutional Neural Network (CNN) and two Long Short-Term Memory networks (LSTM). The CNN is employed to extract and fuse shared features from the dynamic driving environment, while one LSTM is dedicated to estimating the probability of LC maneuver and TTLC, and the other LSTM focuses on estimating the LC risk level. Evaluation of the proposed method on the HighD dataset demonstrates its excellent performance. It can almost predict all LC maneuvers within 2 s before the vehicle crosses lane boundaries, with an 80% recall rate for high-risk LC levels. Even 3.6 s before crossing lane boundaries, the model can still predict approximately 95% of LC maneuvers. The use of the multi-task learning strategy enhances the model's understanding of traffic scenarios and its prediction robustness. LC risk analysis based on the HighD dataset shows that the risk distribution and influencing factors for left and right lane changes differ. In right lane changes, collision risks primarily arise from the leading and following vehicles in the current lane, while in left lane changes, collision risks mainly stem from the leading vehicle in the current lane and the following vehicle in the target lane. The proposed approach can be applied to advanced driver assistance systems (ADAS) to reliably and early identify LC during highway driving, while correcting potentially dangerous LC maneuvers, ensuring driving safety.

1. Introduction

Lane-keeping (LK) and lane-changing (LC) are two mutually exclusive driving behaviors. Studies have shown that LC can lead to traffic flow disruptions (Liu et al., 2023), and unsafe LC is associated with higher collision risks (Mahajan et al., 2022). Most traffic accidents during LC are caused by human factors, and insufficiently considered LC maneuver results in head-on collisions with oncoming vehicles in the target lane (Y. Zhang et al., 2022) or rear-end collisions with vehicles traveling in the target lane. Drivers are expected to follow traffic rules and use turn signals before performing LC to communicate with other road users. However, empirical evidence from two studies (Berndt et al., 2008; Dang et al., 2013) found that less than half of the drivers use turn signals before LC maneuvers. Therefore, developing LC maneuver prediction algorithms that accurately forecast the LC of surrounding vehicles (SVs) and assess collision risks to plan their motion decisions is crucial for autonomous driving systems. In addition, predicting and identifying the driver's LC maneuver through vehicles' interactions and information from the driver and estimating LC collision risks are essential for ensuring the safety and comfort of ADAS.

A complete LC process in highway, as depicted in Fig. 1, can be divided into two stages: LC decisions (LCD) and LC implementation (LCI) (Xie et al., 2019). The LCD stage starts with the generation of LC motivation and concludes with the decision to either perform LK or LC.

* Corresponding author.
E-mail address: lnc@whut.edu.cn (N. Lyu).

https://doi.org/10.1016/j.aap.2024.107830
Received 15 March 2024; Received in revised form 8 October 2024; Accepted 26 October 2024
Available online 4 November 2024
0001-4575/© 2024 Elsevier Ltd. All rights are reserved, including those for text and data mining, AI training, and similar technologies.

During the decision-making process, the driver first generates the intention to perform LC. Then, the traffic context is considered to evaluate the benefits and safety conditions of LC before making the final decision. The LCI stage consists of two sub-processes. First, the driver maneuvers the vehicle longitudinally and laterally towards the target lane until the entire vehicle is positioned within the target lane. Subsequently, the driver steers the wheel to complete the lateral movement, and the vehicle travels directly along the target lane. One of the aims of this paper is to predict as early and accurately as possible whether the vehicle will perform LC in the upcoming period before crossing lane boundaries, covering both the LCI and LCD stages. According to the review of (Mozaffari et al., 2022a), the current highway LC maneuver prediction research with detailed performance evaluation can predict LC occurring 2.5 s before crossing lane boundaries. Considering that the typical duration of the LCI stage is around 6 s, as reported in the literature (Salvucci and Liu, 2002; Toledo and Zohar, 2007), it indicates that these predictions mainly occur during the LCI stage and primarily rely on the lateral movement features of the vehicle trajectory to output LC probabilities. To develop an effective LC maneuver prediction model with good forecasting capabilities and robustness, it is essential to learn the underlying logic of LC from the spatiotemporal features of the vehicle's operating environment, simulating the decision-making process of human drivers. This will enable the model to predict LC when there is no significant lateral deviation in the HV's trajectory (i.e., during the early stages of LCI and the entire stage of LCD).

Potential collision risks during the LCI stage are among the primary considerations for drivers during the LCD stage. These factors are indispensable in LC maneuver prediction research, and a multitude of LC models of various types have taken them into account. Rule-based LC models, exemplified by the Gipps LC model (Gipps, 1986), consider the necessity and safety of LC from the perspective of gap acceptance and lane selection (Hidas, 2005; Laval and Leclercq, 2008). Utility theory-based LC models quantify the utility values for each lane through utility functions to determine the probability of choosing a lane. The design of these utility functions often takes into account the dynamic risk during driving(Sun and Elefteriadou, 2012; Knoop and Buisson, 2015). Game-theoretical LC models treat LC decisions as strategies for drivers to maximize their benefits under certain strategies adopted by surrounding drivers (Ji and Levinson, 2020). The designed payoff function often includes considerations of safety and collision risk during the LCI stage (Ali et al., 2019, 2021). However, human driving behavior involves heterogeneity and highly nonlinear operations. Traditional mathematical models, limited in representation power, struggle to consider the diversity and uncertainty of the LC process, leading to significant errors compared to actual scenarios. With the advancement of machine learning technologies, data-driven models exhibit superior performance, particularly in terms of prediction accuracy, across multiple dimensions compared to traditional mathematical models. Even in this context, many studies have explicitly incorporated safety considerations during the LCI stage. Manually designed safety factors have been used as candidate input features (Liu et al., 2019; Lyu et al., 2022), and neural networks have been employed to extract features representing safety factors (Yifan Zhang et al., 2023). Some research in LC based on reinforcement learning incorporates safety factors as part of the reward function (Hoel et al., 2018; G. Li et al., 2022; Wang et al., 2018). In the aforementioned studies, motion indicators such as vehicle spacing and speed differential are commonly employed to assess the safety and collision risk during the subsequent LCI stage. However, this evaluation method is relatively coarse, often involving only a few vehicles in the driving environment. It primarily considers the driving risk in the target lane or focuses solely on rear-end collisions, neglecting the consideration of lateral contacts. Meanwhile, some research focusing on LC risk has developed surrogate safety measures during the LCI stage to quantify risks (Chen et al., 2019; T. Chen et al., 2021; Park et al., 2018) and models for predicting LC risk. Microscopic movement characteristics such as vehicle speed, relative speed, and spacing have been used in Random Forest (Chen et al., 2020), as well as in LightGBM (Shangguan et al., 2022; Yunchao Zhang et al., 2023).

Although numerous studies have been conducted on LC prediction and LC risk assessment and prediction, several research gaps still exist. Existing LC risk prediction research rarely considers considered the recognition of LC maneuvers, limiting the practicality of prediction models. Alternatively, studies on these two tasks often use separate models, leading to significant computational resource consumption in model training and real-world deployment. Models trained under single-task supervision tend to minimize the error between predicted and ground truth, rather than modeling vehicle interactions and driver decision-making processes, resulting in potential overfitting. In reality, these two aspects are interrelated, and joint modeling of both could bridge this gap. Moreover, most existing LC prediction studies only estimate the likelihood of LC maneuvers without providing information on the Time-to-Lane-Change (TTLC), which could offer more useful information for ADAS decision-making. The data used for model training typically focuses on specific time intervals before the vehicle crosses lane boundaries, which may not effectively capture LC maneuvers at other periods and cannot be used for continuous online prediction in real-world environments. To address the research gaps mentioned above, inspired by the actual driver decision-making process and related LC decision model research, considering the model's nonlinear fitting capability and the correlation between LC maneuver prediction and real-time LC risk prediction tasks, we develop a deep neural network with a multi-task learning strategy to simultaneously predict LC maneuver and the risk level associated with the expected LC. Samples obtained by sampling different periods of lane change events are used to train this model, utilizing a large high-precision trajectory dataset, HighD, from German highways for this research. Our contributions are as follows:

- A unified model is proposed in this study for predicting LC maneuver, LC risk, and TTLC based on multi-task learning. The model's backbone comprises convolutional neural networks (CNN) and long short-term memory networks (LSTM). CNN is utilized to extract and fuse spatiotemporal features of vehicle operations, serving as a shared representation for the three tasks. Each LSTM network and a feed-forward network are employed to model the mapping relationship from the shared representation to the three tasks. This enables simultaneous identification of LC maneuvers and proactive risk estimation.

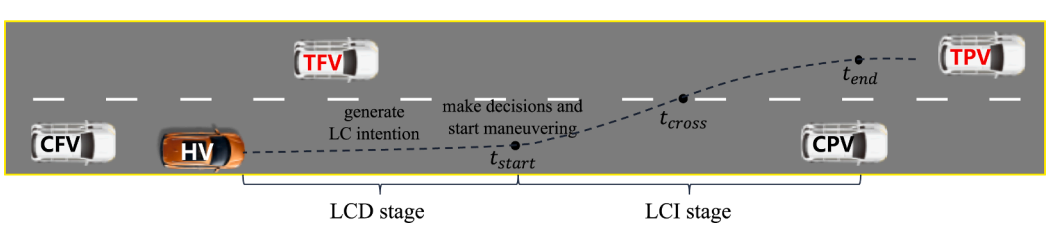

Fig. 1. The illustration of the LC process. Where HV is the host vehicle, CPV and CFV refer to the preceding and following vehicles in the current lane, and TPV and TFV refer to the preceding and following vehicles in the target lane.

- By utilizing a multi-task learning strategy to assist with LC-related risk and TTLC prediction during LC prediction, the model's functionality is expanded, enhancing its understanding of the traffic environment and actual driving decision-making. This is reflected in improved early prediction capability, robustness, and generalization in the LC prediction task.
- A comprehensive evaluation of the proposed method against several state-of-the-art prediction models, particularly in terms of early prediction time and cost analysis, shows that proposed method outperforms the others.

The rest of the paper is organized as follows: Section 2 reviews the existing LC maneuver prediction methods and quantification of LC risk, as well as the analysis and prediction of influencing factors. Section 3 outlines the proposed methodology. Section 4 introduces the data used and implementation details. Section 5 evaluates the proposed approach using the naturalistic vehicle trajectory dataset and discusses the results. Finally, Section 6 summarizes our research findings, identifies limitations, and suggests future directions for research.

2. Literature review

2.1. LC maneuver prediction

The development of data-driven LC maneuver prediction models using trajectory data treats LC maneuver prediction as a time-series classification problem. It leverages the past motion states of the HV and SVs to infer the future behavior of the HV. The fundamental idea is to select features that characterize LC maneuvers based on prior knowledge, such as the HV's lateral velocity and headway, and then use machine learning algorithms for modeling and prediction. These algorithms can be further categorized into traditional machine learning methods (SVM, decision trees, ensemble learning, etc.) and deep learning approaches.

In the domain of traditional machine learning methods, Izquierdo et al. (2017) constructed an SVM-based LC maneuver prediction model, using a vector obtained by flattening a multivariate time series composed of the HV's lateral position, lateral velocity, and heading angle as input features. Zhang et al. (2018) fused traffic context information into estimating the host vehicle's driving behavior using Continuous Hidden Markov Models. Their method achieved an 80 % recall rate at 0.5 s before the vehicle crossed lane boundaries and a nearly 70 % recall rate at 4 s before. Y. Zhang et al. (2022) employed the XGBoost for feature selection from thousands of statistical variables in time series and achieved a 95 % accuracy within 1 s. Acknowledging the heterogeneity in LC decisions among different drivers, Wang et al. (2021) proposed an SVM-based LC maneuver prediction model considering driver emotion, showing that driver emotion involvement can improve the accuracy of driver intent prediction. Li et al. (2019) developed an LC maneuver prediction model considering driver style, where input features included turn signal status, lateral position, and driver eye movement behavior, achieving a prediction accuracy of 78 % at 4 s before crossing the boundary. Wang et al. (2021) proposed an SVM-based LC maneuver prediction model considering driver emotion, showing that driver emotion involvement can improve the accuracy of driver intent prediction.

With the advancement of machine learning algorithms and computational power, deep learning has gained significant traction in recent years for LC maneuver prediction due to its higher predictive accuracy and end-to-end capabilities. In trajectory-based LC maneuver prediction, neural network methods can be mainly categorized into two types based on their input forms. First, some methods extract time series representing vehicle motion and interactions from trajectory data and input them into units capable of modeling time series (e.g., RNN, Transformer) for prediction. For instance, Xie et al. (2019) utilized deep belief networks and LSTM to model the LCD and LCI stages simultaneously. Sensitivity analysis revealed that the leading vehicle in the target lane has the most significant impact on the driver's LC decision, and the driver pays more attention to the time headway rather than vehicle speed. Mahajan et al. (2020) proposed a semi-supervised LC maneuver prediction method that automatically labels LC or LK events. Their LSTM-based LC maneuver prediction model using HV trajectory information achieved an 88 % accuracy 3 s before crossing. Scheel et al. (2019) employed multiple LSTMs to model the interactions between the HV and SVs, with attention mechanisms focusing on SVs that have the most influence on the HV's LC decision and implementation. They then concatenated the hidden state vectors containing interaction information before classification. Additionally, Wirthmuller et al. (2021) transformed the LC maneuver prediction problem into directly predicting the TTLC for RLC or LLC. Second, some methods convert each frame of trajectory data into simplified bird's-eye view images and utilize CNN to learn and make predictions (Cui et al., 2019; Deo and Trivedi, 2018). This approach embeds trajectory information into the images for the CNN to learn and extract features, compared to manually extracting features from the trajectory data. For example, Mozaffari et al. (2022a) used a CNN with a multi-task attention mechanism to extract features from bird's-eye view images, achieving better early detection accuracy for LC maneuver. For further reviews on LC maneuver prediction, please refer to (Mozaffari et al., 2022b) and (Song and Li, 2022).

Despite the extensive research on LC maneuver prediction, most studies input data fixed at a specific time before the vehicle crosses lane boundaries, which fails to fully capture the entire LC period. The predictive models lack a deep understanding of vehicle interactions and driving decisions, often relying on lateral movement features for judgment, thus needing improvement in robustness and early prediction capabilities. Additionally, limited research considers two significant features affecting LC: vehicle type and traffic status.

2.2. LC risk studies

Research on LC risk mainly encompasses three aspects: LC risk quantification, analyzing factors influencing LC risk, and LC risk prediction.

As for LC risk quantification, Rule-based systems typically analyze the probability of collisions based on Time to Collision thresholds to determine if a driving action is safe (Glaser et al., 2010; Vanholme et al., 2009). While this approach is straightforward, it fails to model the uncertainty present in dynamic driving scenarios explicitly. Subsequent research has focused on addressing this uncertainty. For instance, Oh et al. (2009) calculated real-time safety indices using safe stopping distance and collision time for real-time risk detection. Noh and An (2017) utilized Bayesian networks with collision time and Minimum Safe Margin as complementary indicators to infer potential collision risks, effectively filtering out uncertain noise from trajectories. Park et al. (2018) proposed a lane-change risk index that combines risk exposure time and expected collision severity. Chen et al. (2019) treated the five cars involved in a lane change as a system and developed a lane-change potential collision index using fault trees, considering both lateral and longitudinal collision possibilities. Wu et al. (2020) developed a spatiotemporal risk estimation method, using real-time traffic data to assess the instantaneous risk of lane changes rather than analyzing the safety of the entire LCI stage. Additionally, some studies have evaluated LC risk from a field theory perspective (Khatib, 1986). Huang et al. (2020) proposed a potential risk evaluation method for LC intentions with SVs based on field theory, and (T. Chen et al., 2021) employed the field theory concept and a time clustering algorithm to propose an LC risk level labeling method.

In the aspect of analyzing factors influencing LC risk, Mahajan et al. (2022) concluded from a data statistical analysis perspective that the increase in traffic congestion is associated with an increase in collision risk, and LC has a higher risk of rear-end collisions compared to LK. Chen

et al. (2018) employed a matched case-control logistic regression based on weather and upstream–downstream traffic data. The results indicated that the average traffic flow entering the target lane and the traffic flow ratio significantly influence LC collision probability. Q. Chen et al. (2021) established three types of mixed logit models with mean and variance heterogeneity, revealing that the average gap and speed difference between vehicles significantly affect the risk level of LC vehicle, and driver heterogeneity also contributes to the explanation. Yuan et al. (2022) conducted research based on macroscopic data of upstream–downstream traffic and inter-lane conditions. They found that inter-lane heterogeneity, including imbalanced upstream average speed and downstream traffic volume distribution, is associated with higher risk.

In the context of LC risk prediction, studies often utilize microscopic movement features of vehicles as representations of real-time LC risk. Data-driven machine learning methods are then employed for prediction purposes. For instance, Li et al. (2020) developed an SVM-based method for LC collision risk, using features such as speed, acceleration, speed difference, and gap as inputs. Chen et al. (2019) proposed an integrated framework that includes LC risk quantification, feature selection, and risk prediction. They subsequently developed a proactive LC risk prediction method (Chen et al., 2020). Yunchao Zhang et al. (2023) conducted a more detailed study on LC risk prediction, showing that the LC risk prediction model considering driving style had better prediction performance compared to other models, as aggressive drivers tended to neglect the status of cars behind them during LC. However, these studies utilized features related to vehicles in the target lane (either left or right lane), thus requiring the combination of LC maneuver prediction for practical LC risk prediction. Shangguan et al. (2022) proposed an LC risk prediction method considering driving intention, where LSTM was used for LC maneuver prediction, and subsequently concatenated LightGBM was used for risk prediction. Z.-N. Li et al. (2022) developed a highway LC and collision risk prediction model based on attention mechanisms, with decision trees used for LC decision classification and multi-step LSTM used for LC trajectory prediction. Collision risk was then calculated based on the estimated LC trajectory. However, the overall performance of collision risk prediction was not explicitly provided.

The research on LC risk has made substantial progress, but several challenges still need further attention. Many existing studies on LC risk prediction have not adequately considered the recognition of LC maneuver. Consequently, the feasibility of the proposed models becomes restricted, or the investigations into these two aspects remain segregated and detached from each other. In reality, LC maneuver and risk predictions are closely interconnected and deeply coupled. Firstly, features such as speed, acceleration, gap, and speed difference are commonly shared inputs in both fields, capable of partially characterizing both LC maneuver and LC risk. Moreover, the expected collision risk of an LC maneuver is one of the decision factors, implying a certain causal relationship between these two aspects.

3. Methodology

3.1. LC risk calculation and analysis

3.1.1. Surrogate safety measure

Surrogate safety measures have been widely used in studies that identify highway traffic conflicts and assess the severity of collisions. In this research, we adopted the surrogate safety measure proposed by (Chen et al., 2020, 2019). DRAC and MADR are employed to quantify the instantaneous collision risk between adjacent vehicles.

The Deceleration Rate to Avoid a Crash (DRAC) is the minimum deceleration required for two adjacent vehicles to avoid a collision. In this context, the following notations are used: the following vehicle is denoted as *car_f*, and the preceding vehicle as *car_p*. At timestamp t, the DRAC is given by:

$$DRAC^{car_f\&car_p}(t) = \begin{cases} \dfrac{V^{car_f} - V^{car_p}}{TTC(t)} = \dfrac{(V^{car_f} - V^{car_p})^2}{G}, & if\ V^{car_f} - V^{car_p} > 0 \\ 0, & otherwise \end{cases} \tag{1}$$

In this equation, V^{car_f} and V^{car_p} represent the velocities of *car_f* and *car_p*, respectively. $TTC(t)$ corresponds to the Time to Collision between *car_f* and *car_p* at timestamp t, and G represents the gap between *car_f* and *car_p*. This study decomposes DRAC into horizontal (X) and vertical (Y) components along the roadway. Hence, for the X direction, the terms V and G refer to longitudinal velocity and longitudinal gap, respectively. For the Y direction, V and G represent lateral velocity and lateral gap, respectively.

The Maximum Available Deceleration Rate (MADR) serves as the upper threshold for DRAC. Thus, if the DRAC between *car_f* and *car_p* at time t exceeds the MADR, it is considered that *car_f* has "collided" with *car_p*. The collision probability at timestamp t is equal to 1 only when both the DRAC values in the X and Y directions satisfy the aforementioned conditions simultaneously. The following equation provides the calculation formula:

$$p^{car_f\&car_p}(t) = \begin{cases} 1, & if\ DRAC_x(t) > MADR_x(t)\ and\ DRAC_y(t) > MADR_y(t) \\ 0, & otherwise \end{cases} \tag{2}$$

The Crash Potential Index (CPI) refers to the probability that the DRAC between two adjacent vehicles exceeds the MADR within a certain period. For an observation time interval T, the overall probability that a collision occurs between *car_f* and *car_p* during this interval, denoted as CPI, is calculated using the following equation:

$$P^{car_f\&car_p} = \frac{\sum_{t=0}^{T} p^{car_f\&car_p}(t)\Delta_t}{T} \tag{3}$$

The value of MADR is a critical factor that affects the sensitivity of LC risk assessment and the performance of subsequent LC risk prediction. (Fu and Sayed, 2021) suggested that MADR follows a truncated normal distribution $N(8.45, 1.4^2)$ is optimal for collision precision estimation based on MADR. Most studies proposed or observed deceleration rates in actual road traffic flow between 1.39 and 3.09 m/s^2, which are smaller than the deceleration rate proposed by the American Society of Civil Engineers (ASCE) (3.0 m/s^2) and the comfortable deceleration rate proposed by the American Association of State Highway and Transportation Officials (AASHTO)(Officials, 2011) (3.4 m/s^2). In the studies by (Chen et al., 2020, 2019), through the analysis of CPI, they found that the MADR value of 1.4 m/s^2 better distinguishes the risk distribution of LC events. Based on the above statistics, 1.4 m/s^2 is a relatively small value for MADR. This is because the research focuses on a conflict-based prediction model rather than a collision-based model. The purpose is to identify conflicts prone to collisions in real time, which further helps avoid collisions (Yuan et al., 2022). Conflict modeling is fundamentally more proactive, and thus requires a threshold lower than the MADR observed in actual road traffic flow to encompass all traffic scenarios prone to collisions. Additionally, excessively high deceleration rates can cause discomfort and increase the probability and severity of rear-end collisions. Statistical analysis of the HighD dataset shows that only 2.3 % of vehicles have a deceleration rate exceeding 1.4 m/s^2. This indicates that deceleration rates higher than 1.4 m/s^2 are relatively rare and often occur when drivers avoid collision risks. Therefore, this study also sets the MADR value to 1.4 m/s^2.

3.1.2. Fault tree analysis

The Fault Tree Analysis (FTA) method treats the system's target problem as the top event and systematically lists the causes that lead to the top event in a causal sequence, represented by a directed acyclic graph. It simulates how faults propagate in the system, i.e., how bottom

events' failures lead to system failures. FTA is widely used in system reliability analysis (Derse and Göçmen, 2021; Lee et al., 1985; Xu et al., 2020). For the LCI stage, the five vehicles shown in Fig. 1 are treated as a system. The FTA method estimates the probability of system failure during this stage, with the top event defined as a collision accident occurring during the LCI stage. The fault tree for this system is depicted in Fig. 2. The cause of system failure is any collision between the HV and any of the SVs, which occurs when both the X and Y-direction DRAC values exceed MADR. Thus, based on the fault tree structure, the LC Risk Index (LCRI) is described as:

$$LCRI = 1 - \prod_i (1 - P^{HV\&SV_i}) \tag{4}$$

LCRI is more objective and accurate compared to threshold-based binary risk assessment methods. In contrast to risk assessment methods based on field theory, it provides a more detailed analysis of individual behaviors, making it suitable for in-depth studies on driving behavior. Exactly, the fault tree shown in Fig. 2 allows us to trace the root causes of the top event, which is a collision occurring during the LCI stage. We can identify the fundamental reasons behind this top event by analyzing the tree's hierarchical structure. Specifically, it reveals that during the LCI stage, the HV has a collision risk with one or more of the SVs. This analysis helps us understand the factors that influence LC risk and deduce the process of risk evolution. By identifying the critical factors contributing to the collision risk, we can gain insights into the complex interplay of various elements during the lane-changing process, enabling better risk assessment and mitigation strategies.

3.1.3. Risk clustering

It is important to emphasize that LCRI serves as an alternative safety measure, quantifying the relative level of unsafety during the LCI stage, rather than indicating the actual probability of collision. To interpret LCRI more explicitly, we categorize it into different risk levels, transforming the regression problem into a classification problem. By dividing LCRI into risk levels, we better understand the degree of risk exposure associated with each LC event. Additionally, classifying the risk levels simplifies the task compared to regression, which is more challenging due to the dynamic, complex, and open nature of real-time traffic systems. Therefore, this study utilizes an unsupervised clustering algorithm, KMeans, to categorize LCRI into different risk levels. KMeans iteratively computes cluster centers to minimize the sum of squared distances between samples and their cluster centers, known as the within-cluster sum of squares. We use the elbow method (Humaira and Rasyidah, 2020) to determine the optimal number of clusters for KMeans.

3.2. Multi-task prediction

The overall architecture of the LC maneuver and LC risk prediction model based on multi-task learning is depicted in Fig. 3. The model consists of a CNN-LSTM structure. The CNN Block is used to perform multiple feature fusions on the continuous time sequence features, represented by the matrix $X \in \mathbb{R}^{T \times N}$, where T is the number of time steps, and N is the number of features. The fused features are then used as a potential shared representation for multiple tasks. The LSTM networks are responsible for three sub-tasks: LC maneuver prediction, LC risk prediction, and TTLC prediction, and. The LSTM networks contain two sub-networks, each mapping the shared representation to the task. The step-by-step processing of the proposed prediction model is summarized as follows:

(1) During the time interval T_{obs}, the features for each time step of the HV and SVs are collected. These features are normalized and utilized as inputs to the CNN Block module.
(2) The output of the CNN Block module (i.e., the shared representation) is employed as the input for the first sub-network of the LSTM networks. The sub-network's output representation is concatenated with the embedded features and then passed through feed-forward neural networks to estimate the probabilities of three driving maneuvers (LLC, RLC, LK) and the corresponding TTLC values. Simultaneously, the previous shared representation is used as the input for the second sub-network of the LSTM networks, where a similar procedure is applied to estimate the LC risk level.
(3) If the driving maneuver predicted in (2) is RLC or LLC, the predicted driving maneuver along with the calculated TTLC and LC risk level from step (2) are output as the final prediction results. Otherwise, only the driving maneuver prediction result is output.

3.2.1. CNN-LSTM

The recurrent neural network (RNN), first widely applied in natural language processing (Mikolov et al., 2010), models the correlation between words by propagating hidden states forward at each step, demonstrating impressive results. Consequently, RNN has been extensively utilized for multidimensional data with temporal dependencies, such as time series. In recent years, many LC maneuver prediction studies have adopted RNN as the fundamental model (Ding et al., 2019;

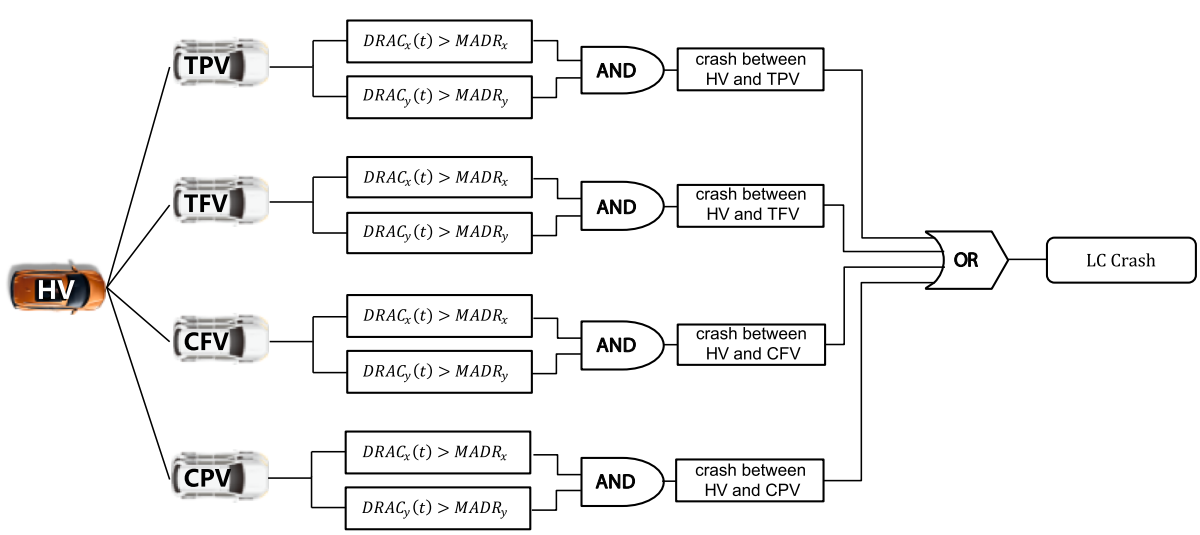

Fig. 2. Fault tree structure of the LCI stage.

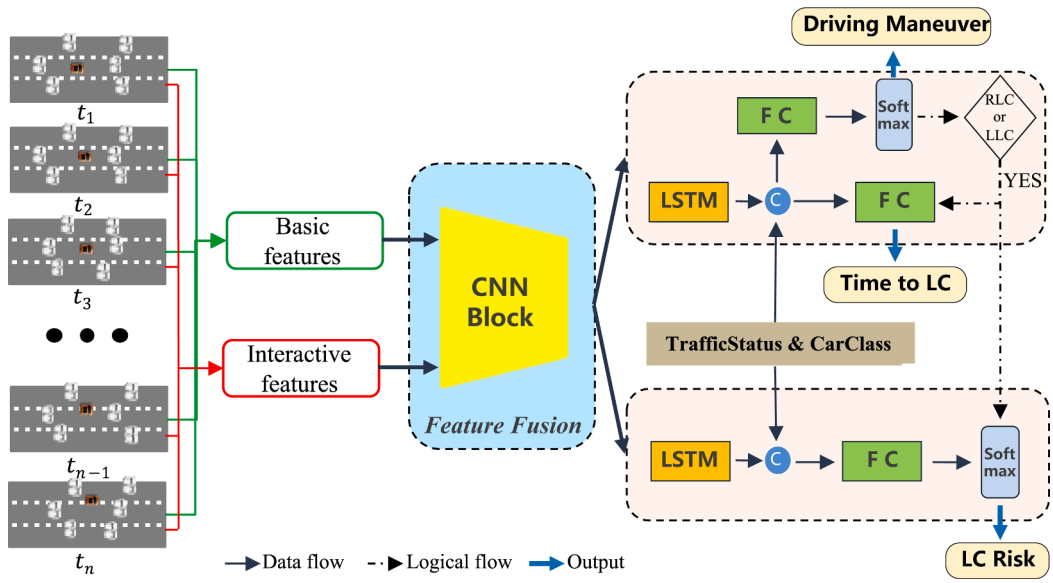

Fig. 3. Schematic diagram of the proposed model.

Scheel et al., 2019; Schreiber et al., 2019; Wirthmuller et al., 2021). In this research, we employ a variant of RNN called LSTM (Hochreiter and Schmidhuber, 1997). LSTM incorporates gated mechanisms to mitigate the vanishing gradient problem in RNN and effectively captures the temporal dependencies of vehicle movement, serving as a component of the model for predicting LC, TTLC, and LC risk levels.

The LSTM used for modeling the temporal dependencies and generating the final feature vector for the shared representation consists of core components: an input gate i that determines which information to update and store, a forget gate f that decides what information to discard, an output gate o that controls the information to be output and a memory cell c that stores information. Its operation is as follows:

(1) Given the input $x_t \in \mathbb{R}^N$ at time step t and the previous hidden state h_{t-1}, the computational formulas for the aforementioned gate units at time step t are as follows:

$$i_t = \sigma(W_{xi}x_t + W_{hi}h_{t-1} + b_i) \tag{5}$$

$$f_t = \sigma(W_{xf}x_t + W_{hf}h_{t-1} + b_f) \tag{6}$$

$$o_t = \sigma(W_{xo}x_t + W_{ho}h_{t-1} + b_o) \tag{7}$$

$$c_t = \tanh(W_{xc}x_t + W_{hc}h_{t-1} + b_c) \tag{8}$$

where W_{xi}, W_{xf}, W_{xo}, W_{xc}, W_{hi}, W_{hf}, W_{ho}, W_{hc} are learnable weight parameters, b_i, b_f, b_o, b_c are learnable bias parameters, tanh and σ denotes the hyperbolic tangent function and sigmoid function, respectively.

(2) The update of the cell state at time step t is a crucial stage, and it is done using the following method:

$$c_t = f_t \odot c_{t-1} + i_t \odot c_t \tag{9}$$

where $\odot$ represents element-wise multiplication.

(3) Finally, the LSTM's output at time step t, which is the hidden state h_t, encapsulates the information from time steps 0 to t in the time series, along with the semantics representing LC, TTLC, and LC risk. This output is commonly used as the input for a classifier or regressor, and its calculation formula is:

$$h_t = o_t \odot \tanh(c_t) \tag{10}$$

In this study, the hidden states h_t output by each sub-network are not directly fed into the classifiers and regressors. Instead, they are concatenated with the embedded vectors representing the traffic status and vehicle type. This approach incorporates the influence of traffic status and vehicle type on LC and LC risk modeling. Subsequently, the concatenated features are separately fed into the driving behavior classifier, TTLC regressor, and LC risk classifier for the final predictions.

The CNN Block is positioned before the LSTM networks. The vehicle's spatiotemporal features are first processed through the CNN Block for multiple convolutional rounds before being passed to the LSTM network for estimating various tasks. The specific architecture of the CNN Block is shown in Fig. 4. It resembles a Bottleneck structure similar to ResNet50 (He et al., 2015), but with 1D convolutional kernels (replacing the 2D convolutions in ResNet50) and residual connections. Additionally, a CBAM attention layer (Woo et al., 2018) is inserted in the middle of the network. Utilizing a CNN with residual connections helps maintain a certain network depth to enhance network expressiveness and facilitates convergence during training. In one of the intermediate convolutional operations, the CNN Block reduces the time steps of the feature sequence by half while doubling the feature dimension. This process does not sacrifice information content and improves the vanishing gradient problem in the subsequent LSTM networks. The introduction of the CNN Block for preliminary computation of the spatiotemporal features is reasonable because these features are relatively basic. Therefore, fusing them beforehand is justified. Some studies, e.g., (Liu et al., 2019) have designed reward and safety factors based on trajectory data to model LC. The role of the CNN Block in this study is similar to these functions, serving as a feature extractor that learns a set of parameters to fuse basic features into more advanced ones capable of effectively representing LC and LC risk. The computation of the CNN Block is described as follows:

$$X' = CNN(X) \tag{11}$$

Where $X' \in \mathbb{R}^{2N \times \frac{1}{2}T}$.

3.2.2. Multi-task learning

Multi-task learning aims to enhance the generalization performance on multiple tasks by leveraging shared representation and useful information across related tasks (Zhang and Yang, 2018). Numerous studies have demonstrated that compared to single-task learning, the multi-task learning paradigm can achieve compatible or even superior results

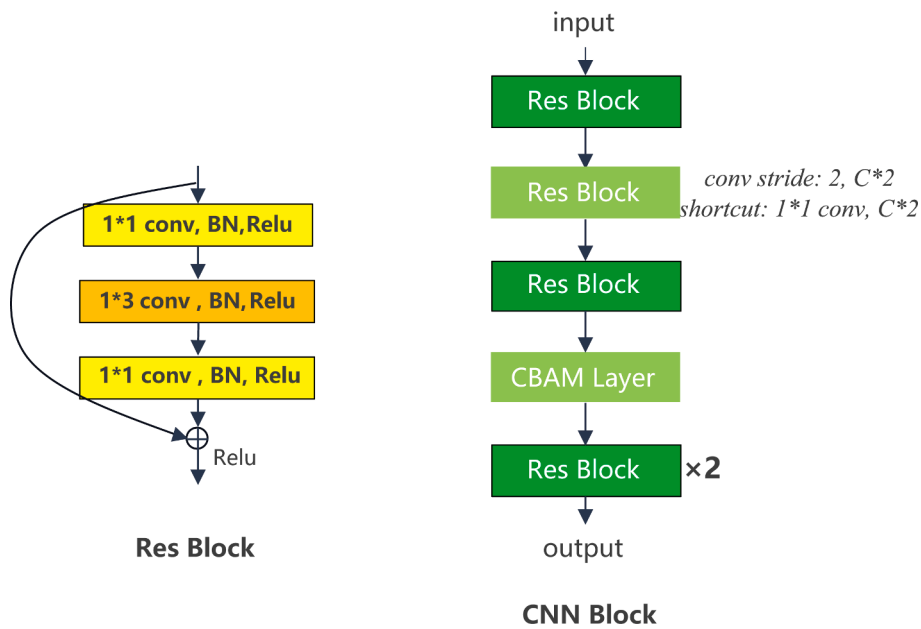

Fig. 4. Schematic diagram of the CNN Block.

(Wang et al., 2023; Xing et al., 2021; C. Zhang et al., 2022). In the driving process, the spatiotemporal state of the vehicle serves as a crucial representation of driving behavior. The spatial positions of vehicles and their interaction relations directly impact TTLC and potential collision risk. The potential collision risk, in turn, constitutes a decisive factor influencing the driver's behavior. These three tasks are deeply coupled and share many common representations. Therefore, this study introduces multi-task learning to optimize LC maneuver, TTLC, and LC risk prediction tasks simultaneously, enabling the model to learn more generalized features from the data and achieve effective and robust performance across multiple tasks.

As shown in Fig. 3, the output of the CNN Block, which extracts and fuses the vehicle's spatiotemporal features, is shared by downstream LSTM sub-networks. Specifically, the LC maneuver prediction and TTLC prediction tasks are assigned to one sub-network, while the LC risk prediction task is assigned to another sub-network. Although driving behavior inference information can be obtained from the TTLC prediction task, we adopt multi-task learning to facilitate training the model on similar parallel tasks for better generalization ability. Moreover, since TTLC regression is more challenging than the three-class driving behavior inference, we can improve the regression performance by learning features through eavesdropping on the classifier (Mozaffari et al., 2022a; Wirthmuller et al., 2021). The output hidden states h_t of each sub-network are concatenated with the embedded features and then passed through the corresponding task's output layer to obtain the estimated values for each task. The output layers for each task are similar, consisting of two fully connected neural network layers. The number of neurons in the first layer is 122, and the number in the second layer is task-specific. Dropout with a rate of 0.4 is applied between the layers.

Cross-entropy loss and Mean Squared Error (MSE) loss are the loss functions for classification and regression tasks, respectively. Since TTLC and LC risk level predictions are made only when the LC maneuver prediction result is either LLC or RLC, the loss functions for these two tasks are also subjected to mask processing. The loss functions for the three tasks are as follows:

$$Loss_{lc} = -\frac{1}{n}\sum_{i=0}^{n}\sum_{c=0}^{2} y_{lc,i,c}\log\widehat{y}_{lc,i,c} \tag{12}$$

$$Loss_{lcrisk} = -\frac{1}{\sum_{i=1}^{n}\gamma_i}\sum_{i=0}^{n}\sum_{c=0}^{2}\alpha_c\gamma_i y_{lc_risk,i,c}\log\widehat{y}_{lc_risk,i,c} \tag{13}$$

$$Loss_{ttlc} = \frac{1}{\sum_{i=1}^{n}\gamma_i}\sum_{i=0}^{n}\gamma_i\left(y_{ttlc,i} - \widehat{y}_{ttlc,i}\right)^2 \tag{14}$$

Where $y_{lc,i,c}$ and $\widehat{y}_{lc,i,c}$ respectively denote the ground truth probability that the sample i belongs to the label c and the predicted value by the model in the LC maneuver prediction task, the same applies to other tasks. n stands for the number of training samples. γ is a binary variable, when $y_{lc,i,c}$ equals 0, γ becomes 0, and in other cases, γ becomes 1. The coefficient α is introduced to address the challenge of imbalanced samples, acting as a class weight factor determined at the algorithmic level.

The loss function used in the training of the proposed multi-task learning model is a weighted sum of the individual task loss functions:

$$Loss = \lambda_{lc}Loss_{lc} + \lambda_{ttlc}Loss_{ttlc} + \lambda_{lcrisk}Loss_{lcrisk} \tag{15}$$

3.2.3. Evaluation metrics

For the classification tasks (LC maneuver prediction and LC risk prediction), several classic evaluation metrics are utilized, including accuracy, precision, recall, and F1 score. In the context of LC maneuver prediction, recall indicates the proportion of actual LC events correctly detected by the model, while precision reflects the model's false positive rate and prediction credibility. Having very high recall and precision would imply that the model is nearly perfect, which is often challenging to achieve. The evaluation of the model should consider the specific application scenario. If the model is designed for autonomous driving, where the HV needs to predict SVs' behaviors to plan its actions, ensuring safety is a primary concern. Therefore, a high recall rate should be a priority. On the other hand, if the model is used in human–machine cooperative driving or human-like driving, where the autonomous driving system needs to learn to imitate human drivers' driving intentions and decisions, precision may be a more critical metric. In real driving, vehicles spend more time in the LK than in the LC state. A high false positive rate would mean that the autonomous driving system and the human driver's driving intentions and decisions frequently diverge, leading to a poor driving experience.

However, relying solely on these classic metrics cannot

comprehensively reflect model performance. It is also essential to examine the model's predictive performance in different real TTLC scenarios. A practical classification model should have a high recall in smaller TTLC scenarios (Mozaffari et al., 2022a), as mispredictions can lead to safety-related issues for both HV and SVs. Hence, we also calculated the recall for the classification tasks in different real TTLC scenarios. (For the LC maneuver prediction task, only recall can be computed, as LK samples do not have the TTLC attribute).

For the regression task (TTLC prediction), MSE is used as the loss function. However, the Mean Absolute Error (MAE) is utilized as the performance evaluation metric for the model, as it allows for a more straightforward interpretation of prediction error in time units, thereby providing a clearer insight into the model's performance in TTLC prediction. Similarly, we also analyze the errors in the model's TTLC predictions relative to different real TTLC scenarios.

4. Experimental preparation

4.1. HighD dataset

Recently, a set of high-precision naturalistic vehicle trajectory datasets (Krajewski et al., 2018; Zheng et al., 2022) have provided great convenience for research on driving behavior and road traffic safety. In this study, we utilized the HighD dataset (Krajewski et al., 2018) to validate the proposed method, The HighD dataset is a new collection of naturalistic vehicle trajectories recorded on the German Cologne highway. This dataset was generated using drone-captured videos and advanced computer vision techniques to process and obtain the trajectory information of every vehicle at every moment along the entire road section. The recorded information includes the vehicle's position, speed, gap, and more, with a recording frequency of 25 Hz. The HighD dataset consists of 60 sub-datasets, covering six road sections, totaling 147 driving hours, with over 110,000 vehicles and 10,000 lane-changing events. The scenarios encompass basic highway sections, merge areas, various traffic status, and different periods, providing high representativeness. By extracting data from HV and SVs, the dataset simulates the environmental perception of intelligent cars in real-world situations, making it well-suited for our research objectives.

4.2. LC and LK data extraction

As shown in Fig. 5, the HV refers to the host vehicle for which the upcoming behavior is being predicted. The SVs include the left preceding vehicle (SV_1), preceding vehicle (SV_2), right preceding vehicle (SV_3), left following vehicle (SV_4), following vehicle (SV_5), and right following vehicle (SV_6). Considering the practical environmental perception range of intelligent vehicles and the constraints of the HighD road section length, we only extracted data for the HV and SVs within a range of 150 m in the forward direction and 100 m in the backward direction. These selected variables are candidate features for the LC maneuver and risk prediction tasks.

LC events include two categories: RLC and LLC. As shown in Fig. 1, t_{cross} denotes the moment when the vehicle crosses the lane boundary, while t_{start} and t_{end} signify the start and end of the LCI stage. Additionally, $t_{current}$ designates the present time, representing the final frame of input data. Let us clarify several pivotal variables:

$$TTLC = t_{cross} - t_{current} \tag{16}$$

$$LCI_time = t_{end} - t_{start} \tag{17}$$

The method for extracting LC events is outlined as follows:

- Identify timestamps when the HV's LaneId changes, corresponding to t_{cross} as depicted in Fig. 1.
- At the t_{cross} timestamp, traverse frames chronologically backward along the temporal axis. Once the absolute value of the lateral velocity V_y remains below 0.25 m/s for five consecutive frames, label the first frame as t_{end}. Similarly, traverse frames forward to label t_{start}. Events where t_{start} or t_{end} falls beyond the map boundaries are discarded.
- Extract data for the first half of the LCI and LCD stages. Extract trajectory data from within 9 s before t_{cross}. This 9-second interval comprises the observation window length T_{obs} along with the maximum value of TTLC set in this study (5 s). This data encompasses velocity, relative velocity, gap, and other attributes for the HV and surrounding six vehicles. These attributes are computed by sequentially analyzing the neighboring six vehicles around the HV in each frame. If data extraction is constrained by map boundaries, the maximum available duration is extracted.

A total of 2903 LLC events and 3341 RLC events were extracted using the above method. It is worth noting that a very small number of mandatory LC events were included, originating from sub-datasets No. 58 to No. 60. Due to the subsequent data partitioning method, they were all allocated to the test set. We believe that a practical prediction model should be able to effectively capture both discretionary and mandatory LC maneuvers. Fig. 6 provides a visualization of the extracted LC events. Fig. 6(a) is a visualization of randomly extracted LC vehicle trajectories from the HighD No. 4 sub-dataset, demonstrating the effectiveness of this method in capturing the starting and ending points of the LCI stage. Fig. 6(b) shows the distribution of the duration of LCI stages, with the majority lasting between 4 and 7 s. After extracting the LC events, a sliding window approach is used to sample the data. The sliding window duration is set as T_{obs}, and the sliding step is set as 1 s. This method effectively increases the limited number of LC samples while ensuring diversity among the samples, avoiding high redundancy in the sampling results. And a total of 10,917 LLC samples and 11,721 RLC samples were obtained from the LC events.

As the HighD dataset contains more LK events than LC events, random samples of vehicles that never performed LC were selected, and data was extracted for these vehicles. Additionally, our objective was to enable the model to comprehend the dynamic driving environment and intricate inherent logical relationships, rather than relying solely on HV features for final predictions. To achieve this, a subset of LC vehicles had

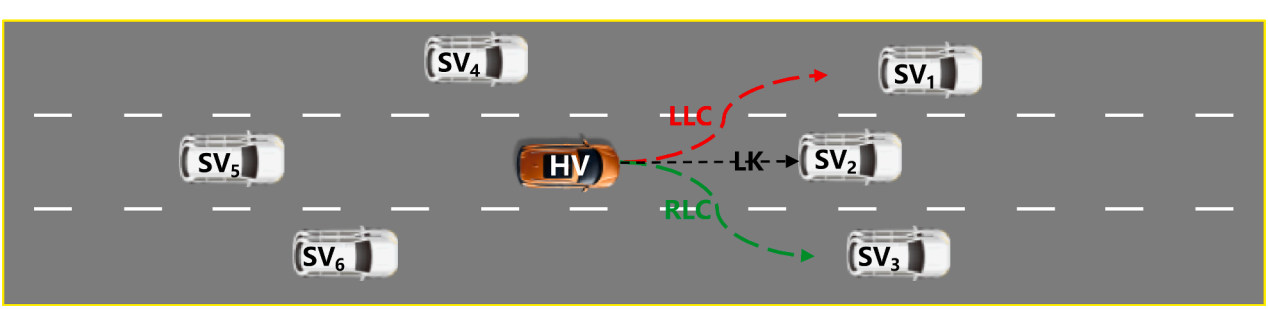

Fig. 5. The illustration of LC and LK scenarios.

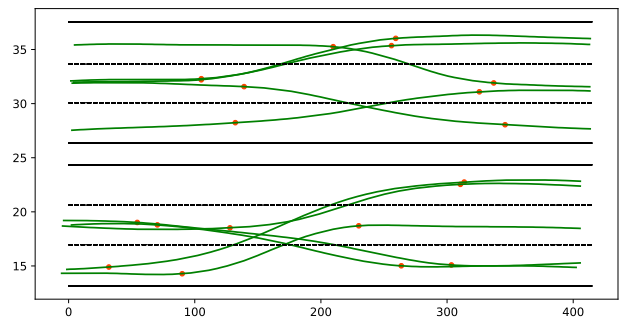

(a) The trajectory of LC vehicles. The points represent the starting and ending positions of the LCI stage.

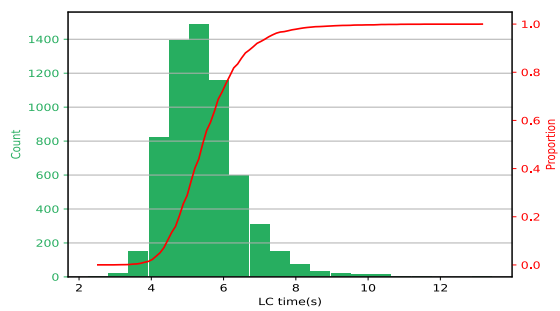

(b) Distribution of LCI_time of LC events.

Fig. 6. Visual statistical analysis of LC events extracted from the HighD dataset.

LK events extracted from a period following t_{cross}. These LK scenarios were readily classifiable as LC by the model. The methodology for extracting LK event data involved a frame-by-frame search of the surrounding six vehicles of the HV, followed by computation. The extracted data contained the same content as LC events. Due to the significantly higher frequency of LK events compared to LC events in the HighD dataset, to ensure diversity, no sampling was conducted for LK events. As a result, each LK event maintains a constant time duration T_{obs}, corresponding to a single LK sample. In the end, a total of 12,555 LK samples (events) were obtained.

Using the method described in Section 3.1, the LCRI values for LC events were calculated and then clustered to determine the corresponding risk levels. Calculating the sum of squared distances for different cluster numbers shows that 3 or 4 clusters are reasonable choices. However, having 4 clusters results in too few samples in the highest-risk category, and having too many categories would be impractical. Thus, we combine the highest and second-highest risk levels, resulting in 3 risk categories: low risk, medium risk, and high risk, as shown in Table 1.

Table 1
Summary of LC risk.

Risk label	Criterion	LC category	Count (Proportion)
Low risk	LCRI < 0.050	LLC	2166 (34.69 %)
		RLC	3247 (52.00 %)
Medium risk	$0.050 \leq$ LCRI < 0.451	LLC	531 (8.50 %)
		RLC	81 (1.30 %)
High risk	LCRI ≥ 0.451	LLC	206 (3.30 %)
		RLC	13 (0.21 %)

4.3. Summary of extracted features

The prediction of LC maneuver in the moments close to the vehicle crossing the lane boundary is primarily related to the HV's motion state. On the other hand, predicting LC in moments far from the vehicle crossing the lane boundary is more complex. It involves factors such as the driver's speed expectations and safety considerations, especially for free lane changes. These factors can be reflected through features such as HV and SVs' speed, acceleration, distance, Deceleration Rate to Avoid a Crash (DRAC), and relative speed. These features are commonly used for real-time LC risk prediction. Therefore, this study extracted HV and SVs' individual features (velocity, acceleration, and lane deviation) and their interaction features (distance, relative velocity, DRAC). These features are relatively basic and easy to obtain without complex manual processing. Moreover, vehicle type and traffic status significantly impact LC and collision risk (Y. Li et al., 2022; Xue et al., 2022). Hence, this study also considered these two time-invariant features (where T_{obs} is a relatively short period, implying that traffic status is considered constant within T_{obs}). The traffic status was determined using KMeans clustering based on road traffic density and SVs' average speed, with three clusters representing free, transitional, and congested. Table 2 summarizes and describes the extracted features used in this study.

4.4. Implementation details

The HighD dataset consists of 60 sub-datasets, each containing records from different times or locations. For our study, we select samples from sub-datasets No. 1 to No. 50 as the training set to train the proposed multi-task learning model. Sub-datasets No. 51 to No. 55 are used as the validation set to adjust the model's hyperparameters. Finally, samples from sub-datasets No. 56 to No. 60 serve as the test set to evaluate the performance of the model. This data-splitting method ensures that the

Table 2
Description of extracted features used for multi-task learning.

Categories	Extracted features	Conditions	Number of features
Basic features	HV's velocity	m/s	2
	HV's acceleration	m/s^2	2
	lane offset	m	6
Interactive features	gap	m, 0–150	6
	relative velocity	m/s	6
	DRAC	m/s^2, > 0	6
Embedded features	car class	car or truck	1
	traffic status	free, transition, congested	1

test set performance metrics are not inflated due to the partial overlap of sampled samples. The multi-task learning model is implemented using the PyTorch framework and trained on a computer with a GPU (GeForce RTX 2060 Super) and CPU (AMD Ryzen 5 5500). The Adam optimizer is used with an initial learning rate of 0.001. A cosine annealing learning rate decay schedule is adopted, and the maximum number of training epochs is set to 50. The batch size used during training is 128.

5. Results and discussion

5.1. Results of multi-task predicting

The proposed multi-task learning model was trained using the implementation details outlined in Section 4.4. To validate the superiority of the proposed multi-task learning model, several recently used data-driven models for LC maneuver prediction or LC risk prediction were compared in this study. These models include the classical Support Vector Machine (SVM), representative ensemble learning methods such as bagging – Random Forest (RF), and boosting – XGBoost (XGB), LSTM, the proposed model without multi-task learning strategy, i.e., CNN-LSTM, a Temporal Graph Convolutional Network (T-GCN) that explicitly models social interaction at each moment in a graph structure (Zhao et al., 2020), and a deep learning model based on the self-attention mechanism – Transformer. Additionally, it includes the recently proposed dual Transformer (Dualformer) model for vehicle LC and trajectory prediction (Gao et al., 2023). The input format for SVM, RF, and XGBoost involved taking the average values of the basic and interaction features for every 0.5 s of data within the window, flattening them into vectors, and finally concatenating them with the embedding features. Additionally, due to limitations, these comparison models were trained and validated separately three times to fit different tasks. Specifically, for TTLC and LC risk level prediction tasks, the training, validation, and test data for these comparison models included only LC samples.

5.1.1. Overall performance

According to the model evaluation metrics in Section 3.2.3, we conducted a statistical analysis of the prediction results of each method on the test set. Table 3 shows the performance of each model on different tasks. The proposed model achieved the best statistical metrics for the three prediction tasks. Specifically, the proposed model outperformed the second-best method, Dualformer, in the LC maneuver prediction task by 0.93 % accuracy. For the TTLC prediction task, compared to the second-best method, CNN-LSTM, the proposed model achieved a slight advantage with a decrease of 0.0185 in the MSE metric. In the LC risk prediction task, compared to CNN-LSTM, the proposed model improved the accuracy metric by 0.63 %. Overall, the proposed model demonstrated improvements in all three tasks' metrics compared to the methods without the multi-task learning strategy, indicating the effectiveness of the multi-task learning strategy for joint LC maneuver prediction and LC risk prediction. Furthermore, the prediction performance of T-GCN, which is designed for social interaction, lags behind other deep models across the three tasks. This may be due to the influence of time step length and the issue of over-smoothing.

Fig. 7 shows the confusion matrix of the proposed model's performance in the LC maneuver prediction task. The overall accuracy of the prediction results is 92.8 %, with recall rates of 93.7 % and 93.5 % for the LLC and RLC classes, respectively. Additionally, the model rarely misclassifies left and right lane change predictions, but is more prone to confusing LK and LC. This can be explained by the fact that during the LCI stage, distinguishing between RLC and LLC maneuvers is relatively straightforward. The model has learned the prerequisites for lane change before the actual LCI occurs, primarily related to gap and velocity differences. Most of the gap and velocity differences between the left and right lanes allow the model to differentiate RLC and LLC effectively. However, the heterogeneity in driving styles leads drivers to make different driving behavior decisions (i.e., whether to change lanes) even when facing similar driving scenarios. Consequently, models may easily confuse LK and LC.

The medium and high-risk recall rates in the LC risk level prediction task are 72.9 % and 78.2 %, respectively. However, due to the data imbalance issue in this task, where most samples are of low risk, a small portion of low-risk samples is predicted as medium or high risk, leading to high false positive rates for medium and high-risk predictions. This problem remains challenging to address. Firstly, the dynamic driving environment makes LC risk estimation inherently difficult, which means that the model's prediction performance cannot be perfect. Secondly, the data imbalance issue inevitably affects the prediction performance of the minority class, especially the precision metric. This phenomenon has also been observed in related studies (Shangguan et al., 2022).

5.1.2. Prediction performance under different Time-To-Lane-Change

Due to the varied processing and sampling of LC events in this study for training, validation, and testing, the overall performance provides a macro-level statistical description. In real-world driving scenarios, it is essential to consider the stability and accuracy of advance prediction since more time is required to respond to unforeseen circumstances. Fig. 8 illustrates the average recall rates of positive classes in LC maneuver prediction for each real TTLC scenario. For clarity, only the

Table 3
Comparison of LC maneuver, TTLC, and LC risk prediction performance.

	LC				TTLC	LC Risk			
model	accuracy	precision	recall	f1	mse	accuracy	precision	recall	f1
SVM	88.03 %	88.68 %	88.03 %	88.15 %	0.9375	76.99 %	86.28 %	76.99 %	80.47 %
RF	89.72 %	90.01 %	89.72 %	89.79 %	0.4775	79.08 %	87.74 %	79.08 %	82.16 %
T-GCN	89.94 %	90.30 %	89.94 %	90.01 %	0.5285	80.05 %	88.31 %	80.05 %	82.96 %
XGB	91.39 %	91.62 %	91.39 %	91.44 %	0.4640	80.98 %	88.70 %	80.98 %	83.66 %
LSTM	91.87 %	92.24 %	91.87 %	91.92 %	0.4879	80.39 %	88.69 %	80.39 %	83.26 %
CNN-LSTM	91.69 %	91.81 %	91.69 %	91.72 %	0.4542	81.49 %	89.07 %	81.49 %	84.10 %
Transformer	91.91 %	92.06 %	91.91 %	91.95 %	0.5137	80.51 %	88.61 %	80.51 %	83.34 %
Dualformer	91.95 %	92.07 %	91.95 %	91.97 %	0.5482	80.70 %	**90.34 %**	80.70 %	84.75 %
Proposed	**92.88 %**	**92.93 %**	**92.88 %**	**92.89 %**	**0.4357**	**82.48 %**	89.70 %	**82.48 %**	**84.92 %**

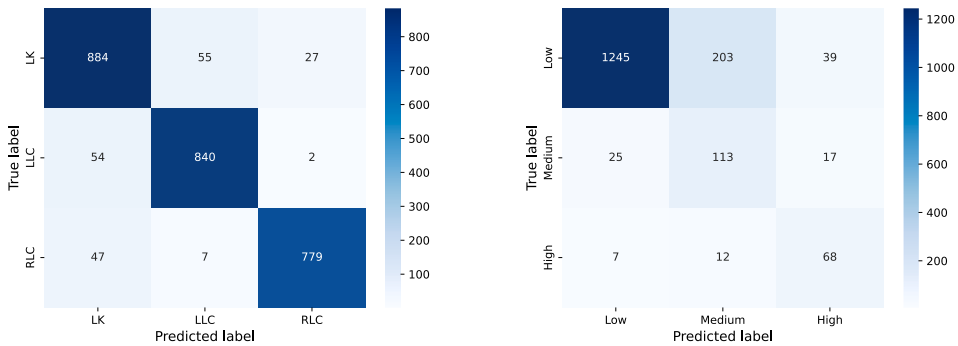

(a) LC maneuver prediction. (b) LC risk prediction.

Fig. 7. The Confusion matrix of the proposed model on classification tasks.

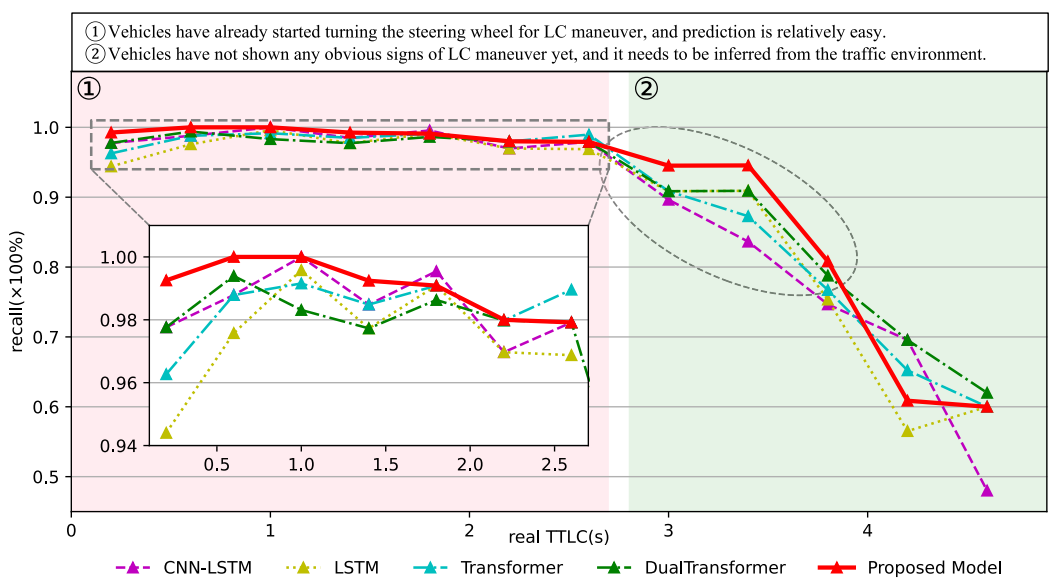

Fig. 8. Comparison of recall performance of LC maneuver prediction task under various real TTLCs.

models with relatively leading predictive performance are shown in this figure. All models show a declining trend in prediction performance as real TTLC duration increases, which is consistent with previous related research findings (Scheel et al., 2019; Wirthmuller et al., 2021; Xing et al., 2020). This is because when the time to cross the lane boundary is distant, the HV does not exhibit significant changes in motion patterns. In such cases, the LC intention and decision need to be inferred from vehicle interactions and traffic context, making it challenging to accurately capture the LC intention and decision-making solely based on trajectory data before the initiation of LCI. The analysis of the HighD dataset by (Siebinga et al., 2023) has shown that even in similar traffic scenarios, different drivers may make diverse driving decisions. Nevertheless, even in the far term of LC, the model still achieves a recall rate of around 60 %, which is a significant improvement compared to random guessing (33 %). Across all real TTLC intervals, the proposed model consistently outperforms other models, particularly in the 2.8–4.0 s before the vehicle crosses the lane boundary (as highlighted in the elliptical frame in Fig. 8, and Table 4), where it shows a significant advantage with an average recall rate improvement of 3.12 %. Specifically, the model can accurately infer approximately 95 % of LC maneuvers 3.6 s before the lane crossing, representing a 3.64 % improvement compared to other methods. Combining this with the time distribution of the LCI stage shown in Fig. 6(b), approximately 90 % of LCI stages have a duration of less than 7.2 s. Hence, it can be estimated that around 90 % of LCs do not exhibit significant lateral motion before 3.6 s before crossing the lane boundary. Therefore, the proposed model is capable of detecting the vast majority of LCs before any noticeable lateral movement occurs, indicating that the model has effectively learned the intrinsic logic of LC intent and decision-making. This advancement is significant because research indicates that early warnings with longer lead times offer better safety benefits in terms of collision avoidance compared to warnings with shorter lead times. Early warnings with a longer lead time help drivers reduce the likelihood of collisions, shorten reaction times, and decelerate more effectively to prevent accidents. Additionally, early warnings may increase drivers' trust in and reliance on the warning system (Tan et al., 2022).

In the 1.8 s before the vehicle crosses the lane boundary (as shown in the zoomed-in detail in Fig. 8, and Table 4), the proposed model can almost perfectly predict all LCs ($\geq$ 99.09 %). The stability and prediction accuracy during this period are generally optimal. Although the advantage is relatively minor, being closer to the lane crossing likely indicates a more urgent need for risk avoidance behavior. From a practical application perspective, slight performance improvements during this period are significant as they provide critical additional time. In the final 1 s before crossing the lane boundary, the recall rates of all models exhibit varying degrees of decline. This is due to the data extraction process in the data preparation stage, where a segment of data after the vehicle crosses the lane boundary is included as LK events to

Table 4
Comparison of recall performance of LC prediction task under various real TTLCs.

real TTLC (s)	LSTM	CNN-LSTM	Transformer	Dualformer	Proposed
0–0.4	94.40 %	97.76 %	96.27 %	97.76 %	**99.25 % (+1.49 %)**
0.4–0.8	97.58 %	98.79 %	98.79 %	99.39 %	**100.00 % (+0.61 %)**
0.8–1.2	99.58 %	100.00 %	99.16 %	98.31 %	**100.00 % (+0.00 %)**
1.2–1.6	97.73 %	98.48 %	98.48 %	97.73 %	**99.24 % (+0.76 %)**
1.6–2.0	99.09 %	**99.54 %**	99.09 %	98.63 %	99.09 % (−0.46 %)
2.0–2.4	96.97 %	96.97 %	97.98 %	97.98 %	**98.03 % (+0.05 %)**
2.4–2.8	96.88 %	97.92 %	**98.96 %**	97.92 %	97.92 % (−1.04 %)
Mean (0–2.8)	97.46 %	98.49 %	98.39 %	98.25 %	**99.08 % (+0.58 %)**
2.8–3.2	90.85 %	89.63 %	90.85 %	90.85 %	**94.51 % (+3.66 %)**
3.2–3.6	90.91 %	83.64 %	87.27 %	90.91 %	**94.55 % (+3.64 %)**
3.6–4.0	75.34 %	74.66 %	76.71 %	78.77 %	**80.82 % (+2.05 %)**
Mean (2.8–4.0)	85.70 %	82.64 %	84.95 %	86.84 %	**89.96 % (+3.12 %)**

prevent the model from learning shortcuts that solely rely on HV's lateral features to infer LC maneuver. These LK events pose a classification challenge for these models. However, the proposed model shows the smallest performance drop during this period, possibly contributing to the robustness brought by multi-task learning.

Considering the performance of various methods on the LC prediction task across different prediction lead times, the proposed method demonstrates both stability in short-term TTLC and superiority in medium to long-term TTLC. This indicates that setting reasonable auxiliary tasks for LC prediction can effectively guide the model to better focus on and learn from the traffic environment and vehicle interactions, thereby improving prediction performance. The integration of various leading advantages is of significant practical importance. As noted by Perumal et al. (2021), the performance evaluation of ADAS is primarily based on three key dimensions: accuracy, response time, and robustness.

Fig. 9 illustrates the MAE of TTLC predictions for different TTLC scenarios across various models. The TTLC prediction results display a trend similar to that observed in LC maneuver predictions—longer real TTLC durations correlate with poorer prediction performance. Among the models, the two Transformer-based models perform relatively the worst, with a maximum error reaching 0.8 s. The proposed model achieves relatively optimal results when the vehicle is about to cross the lane boundary, with a prediction error of only 0.25 s. As the lead time increases, the error gradually grows, with the maximum mean absolute error reaching approximately 0.6 s. Additionally, the rise in MAE with the increase of real TTLC for the same model is relatively gradual, with an increase in error of approximately 0.5 s. This could be attributed to the relative simplicity of the TTLC prediction task, where TTLC can be efficiently approximated using lateral speed and lane offset, leading to minor variations in prediction performance among different models.

Fig. 10(a) and (b) depict the confusion matrices of LC risk level prediction by the model for the real TTLC within 2 s and beyond 2 s, respectively. When the vehicle is within 2 s of crossing the lane boundary, the recall rates for medium and high-risk LC are 80.9 % and 86.0 %, respectively, with improved precision. The prediction accuracy for medium and high-risk LC is enhanced to 52.9 % and 59.7 %, respectively. These results are acceptable as accurately detecting potential high-risk LC maneuvers is crucial for driving safety. However, the model's performance in predicting LC risk level is unsatisfactory when the vehicle is beyond 2 s from crossing the lane boundary. Although the average recall rates for medium and high-risk LC are 64 %, the model exhibits a high false positive rate. The performance of LC risk level prediction also declines with increasing TTLC, which may be attributed to the training difficulty caused by the imbalanced sample distribution and the uncertainty in the early stages of LCI where drivers have a longer time window to make adjustments, making it difficult for the model to infer future risks from the current data. When TTLC is relatively short, some indicators representing LC risk are exposed to the model, leading to significant performance improvement. This indicates that the model can make better predictions with access to relevant information about the LC risk at an early stage.

5.1.3. Cost analysis

The limited computational resources of ADAS and the need to respond promptly to dynamic environments make it highly sensitive to model size and inference time. We analyzed the parameter count and average inference time per sample for several deep models under the conditions of handling the three tasks, as shown in Table 5. The T-GCN

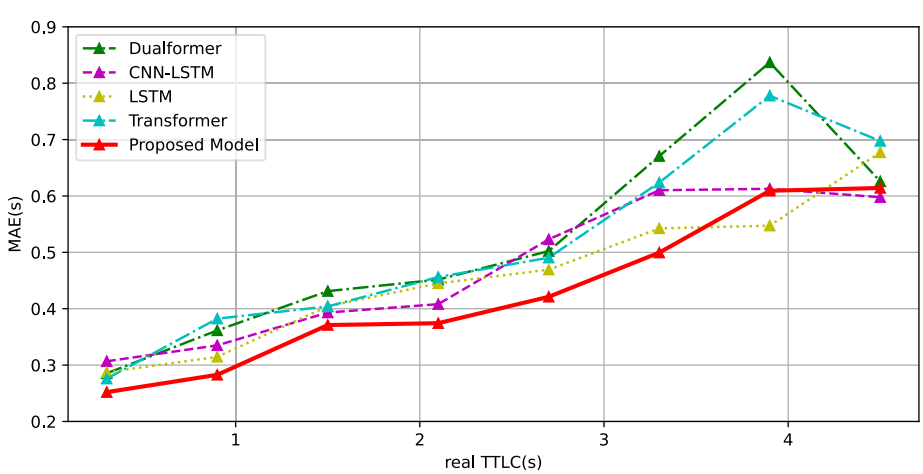

Fig. 9. Comparison of MAE of LC risk prediction task under various real TTLCs.

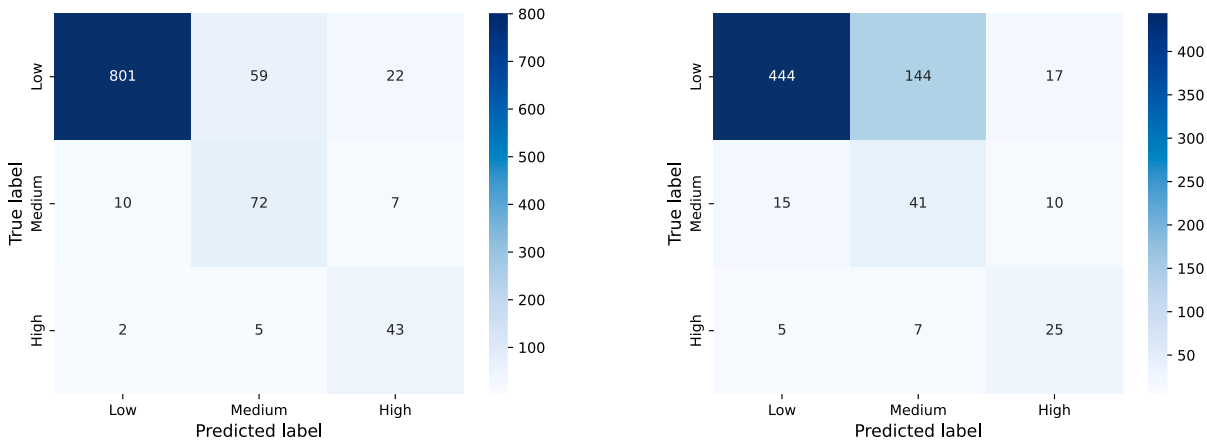

(a) 0s ≤ real TTLC ≤ 2s. (b) 2s < real TTLC ≤ 5s.

Fig. 10. The Confusion matrix of the proposed model LC risk prediction results under different real TTLC intervals.

Table 5
Model parameter count and inference time statistics.

	T-GCN	LSTM	CNN-LSTM	Transformer	Dualformer	Proposed
Params (M)	0.24	0.75	1.32	2.40	5.58	0.62
Reasoning time (s)	0.1440	0.0018	0.0243	0.4251	0.4308	0.0100
LC predictiona ccuracy	89.94 %	91.87 %	91.69 %	91.91 %	91.95 %	92.88 %

model has the fewest parameters at 0.24 M, but its inference time is relatively high, and it performed poorly in previous tasks. Although the two Transformer-based models performed well in previous LC prediction tasks, they have the largest number of parameters and the longest inference times (> 0.42 s), which is highly unfavorable for functions such as emergency collision avoidance. The proposed method has a parameter count that is only 0.38 M larger than T-GCN and is one-fourth that of the Transformer models and one-ninth that of Dualformer. In terms of inference time, it is only slightly longer than LSTM (+ 0.0082 s), ranking second, with the difference being negligible. Overall, the proposed method undeniably maintains a leading position in balancing accuracy and cost.

5.2. Analysis of LC risk

Previous studies have identified significant differences in left and right LC risks under certain scenarios, even though different risk quantification methods were employed. This study also observed similar phenomena. As shown in Table 1 and Fig. 11(a), LC events with medium and high risk are highly imbalanced between RLC and LLC, with a much higher number of risky LLC events compared to RLC events (7.8:1), highlighting the higher collision risk associated with LLC compared to RLC from a macro perspective in the HighD dataset. This finding is consistent with several studies based on other naturalistic driving data (Guo et al., 2024; Satzoda et al., 2015; Wen and Chen, 2023), including scenarios such as weaving zones, tunnel entrances, and other common road segments. In the analysis of the HighD dataset, we calculated the

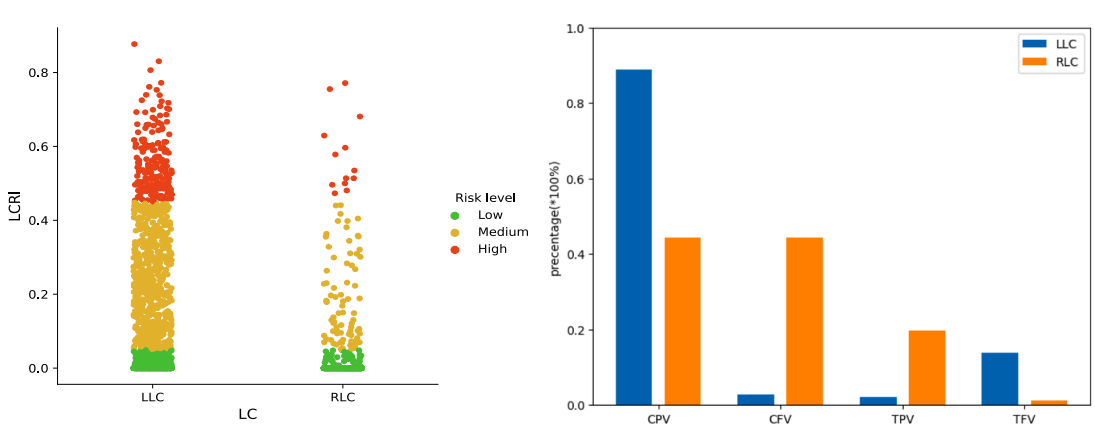

(a) Quantity. (b) Risk source.

Fig. 11. Comparison of collision risks between LLC and RLC.

average speeds of vehicles in each lane on the six-lane bi-directional highway. The one-way ANOVA (aggregated data passed normality and homogeneity of variance tests) indicated that lane position significantly influences the average lane speed, with lane speed decreasing from left to right. Therefore, we suggest that the reason for this imbalance is that the left lanes usually have higher rates, and the traffic environment is more dynamic and complex, making it more prone to risky scenarios. On the contrary, some studies argued that RLC is more dangerous than LLC. Research by (Li et al., 2020) suggested that in traffic oscillations, LLC exhibits smaller acceleration/deceleration, making LLC more effective in filling gaps and potentially reducing collision risks. Two driving experiments conducted in China (Li et al., 2015; Yang et al., 2018) identified numerous right-lane overtaking incidents, despite Chinese traffic regulations prohibiting overtaking on the right. Additionally, RLC events had shorter average durations than LLC. Yang et al. (2018) proposed that limited visibility during overtaking from the right lane hinders drivers' observation of the traffic conditions in the right adjacent lane, leading to more impulsive and riskier RLC maneuvers and higher collision risks. Similarly, in the HighD dataset, Q. Chen et al. (2021b) found similar distinctions in LC scenarios. When the CPV is a truck, due to the vehicle being left-hand drive, there is more visibility obstruction on the right side, increasing the risk level of RLC compared to LLC. However, these discussions are limited to countries or regions where driving is on the right side. The situation may vary significantly in countries or regions where driving is on the left side. Therefore, we believe that the difference in collision risks between LLC and RLC is also associated with road type, traffic status, vehicle type, specific traffic scenarios and traffic regulations. As the HighD dataset primarily consists of trajectory data from basic highway segments in Germany, and due to the use of drones, the recorded data is limited to specific road sections, time periods, weather conditions, and lighting, all of which influence vehicle movement characteristics, driving decisions, and driving risks (Das and Ahmed, 2021). Consequently, findings drawn from this data inevitably possess certain biases, particularly regarding the discussion of left and right lane change risks. When generalizing to other scenarios, caution is needed.

In addition to the macro-level risk analysis, all medium and high-risk LC events were further analyzed using FTA to trace the underlying factors contributing to LC risk to investigate which SVs posed collision risks to HV. The results are shown in Fig. 11(b). Both for RLC and LLC, CPV emerges as the predominant risk factor. This finding aligns with previous studies (Chen et al., 2020; Shangguan et al., 2022), where tree-based models ranked CPV-related features as the most important. This convergence of outcomes suggests that a substantial portion of LC decisions might be driven by dissatisfaction with the CPV's velocity. In such instances, where the gap between the two vehicles is minimal and minor velocity differentials are present, insecurity could arise. Remarkably, the proportion of risk originating from CPV is notably higher for LLC. This might be attributed to the fact that LLC often involves merging into a faster lane from the current lane, requiring the HV to accelerate before entirely departing the current lane, thus reducing the gap between the HV and CPV while increasing the velocity differential. This dynamic leads to the emergence of unsafe factors. When HV cannot immediately switch to the target lane, it easily leads to rear-end collisions.

During the LCI stage, the HV's speed typically falls between the average speeds of the current lane and the target lanes' average speeds. Consequently, for vehicles on the target lane, the TFV is often the primary source of collision risk during the LLC stage. A common example is when the HV driver recklessly merges into the left lane without checking the left side mirror. This could easily result in sideswiping or rear-end collisions if the TFV driver reacts late. Conversely, TPV predominantly contributes to collision risk during RLC stage. For instance, due to limited visibility or other factors, the HV may rashly merge into the right lane only to realize the TPV is nearby. In such cases, the HV must take emergency braking measures to avoid a collision.

For drivers, during LLC maneuvers, maintaining a safe distance from CPV is essential, while closely monitoring TFV movements through the rear-view mirror. During RLC, it is advisable to maintain good forward visibility upon entering the target lane, prepare mentally for unforeseen situations, and pay special attention to CFV movements to avoid sudden deceleration and prevent rear end collisions, considering that rear vehicles are less observable than front vehicles. For traffic engineering design, based on empirical analysis or historical traffic flow data, it is possible to implement effective traffic channelization measures on segments with significant speed differentials between lanes or heavy truck presence. Measures such as physical lane markings or safety islands can restrict LC maneuvers, and if necessary, left/right shoulders can be designated to reduce the risk of collisions. Regarding intelligent vehicles, highlighting surrounding vehicles prone to collision during LC maneuvers on the human–machine interface can serve to alert drivers. Alternatively, providing detailed strategies for executing LC maneuvers based on the current driving environment can enhance driver awareness and safety.

6. Conclusion

In this paper, we proposed a unified framework for predicting LC maneuver, LC risk, and TTLC based on a multi-task learning approach, designed to simultaneously predict LC maneuvers and proactively assess the TTLC and the associated risk level in highway scenarios. LC and LK samples are extracted from the extensive naturalistic vehicle trajectory dataset HighD. These samples are utilized for training, validation, and evaluation. The research yields the following conclusions:

- The proposed method exhibits improved predictive performance across all three tasks compared to baseline models, including the proposed model without multi-task learning strategies. Notably, the approach achieves significant advancements in predicting LC maneuver within the first 2 s of a vehicle crossing a lane, with an almost perfect prediction rate, demonstrating stable and highly reliable performance. The average absolute error in TTLC remains below 0.4 s, and the recall rate for high-risk LC instances reaches 80 %.
- A substantial decline is observed in predictive performance as the prediction lead time increases for all models. Specifically, for the LC maneuver prediction task, there is a notable inflection point at a lead time of 2.6 s, beyond which the recall rate experiences accelerated deterioration. Utilizing a multi-task learning strategy to assist in LC risk prediction during LC maneuver prediction helps the model understand traffic scenarios and learn the driver's decision-making process, making early LC predictions more reliable. Even at a lead time of 3.6 s, the model maintains a high recall, predicting approximately 95 % of LC maneuvers. Even before most of these maneuvers show noticeable lateral movement. With a lead time of 2.8 to 4.0 s, the average recall rate approaches 90 %. Despite the overall success, effective long-term driving behavior prediction based on trajectory data remains challenging.
- LC risk analysis shows that LLC maneuvers exhibit a higher probability of collisions than RLC maneuvers in HighD dataset. Specifically, collision risks during RLC primarily stem from the preceding vehicle in the current lane and the following vehicle in the same lane. In contrast, for LLC maneuvers, the prominent collision risks originate from both the preceding vehicle in the current lane and the following vehicle in the target lane. This finding helps comprehensively understand the potential inter-vehicle interaction behaviors in LC, which can be used as a reference for the related risk assessment studies, LC decision-making model studies, and traffic managers.

As a primary contribution of this study, a multi-task learning-based LC maneuver and associated risk prediction model for highway scenarios is proposed. The multi-task learning strategy not only extends the model's functionality but also guides the model to better understand

vehicle interactions and human-like decision-making processes. This significantly enhances the robustness of LC maneuver prediction and improves early prediction performance. The proposed method can be utilized in ADAS systems, leveraging data collected by the vehicle's own sensors to identify LC maneuver earlier before the driver crosses the lane boundary, and to estimate the time to LC and potential collision risk in real-time. This timely correction of dangerous LC maneuvers helps to prevent accidents. In a connected vehicles environment, this method can also be used to identify these critical pieces of information from surrounding vehicles, laying the groundwork for safe decision-making in ADAS. Additionally, the approach presented in this study offers insights for the intelligent vehicles research field. The inherent contradiction between the limited computational power of intelligent vehicles and the growing demand for functionalities can be addressed by considering the use of multi-task learning methods to jointly optimize multiple related tasks within a basic model, thereby conserving computational resources while potentially enhancing model performance.

This study still has some limitations. Firstly, our research scenario is focused on highways and is limited to the basic highway segments represented by the HighD dataset. The findings drawn regarding LC risk are specific to certain conditions. Future research should focus on the impacts of different traffic scenarios, weather conditions, lighting, and driving habits. Secondly, the HighD dataset only covers highways from a single country, which may impose certain limitations on the generalizability of the study. Future research will incorporate diverse datasets from different countries, especially those with varying driving habits and traffic characteristics, to validate the generalizability of the proposed method and enhance its applicability on a global scale. And when applying the proposed method to other road types, the potential impact of the road type should be fully considered, such as oncoming vehicles and traffic rules on urban roads without central dividers. Therefore, it is recommended to include these potential influencing factors in the model and to use trajectory data from such road types for training or fine-tuning the model. At last, driver-derived information, such as posture, eye movement, voice, and even physiological signals, can often capture driving behavior earlier and more accurately than vehicle trajectory information alone (Xing et al., 2021). Surrogate safety measures that consider the driver's state are more realistic in reflecting the level of potential driving risk, and the prediction of driving behavior and driving risk based on multimodal data has very high application prospects. Future research should incorporate driver-derived information into the modeling of driving behavior inference and risk assessment and prediction.

CRediT authorship contribution statement

Liu Yang: Writing – review & editing, Supervision, Resources, Project administration, Funding acquisition, Formal analysis, Conceptualization. **Jike Zhang:** Writing – original draft, Visualization, Validation, Software, Project administration, Methodology, Investigation, Formal analysis, Data curation. **Nengchao Lyu:** Writing – review & editing, Resources, Project administration, Funding acquisition, Formal analysis, Conceptualization. **Qianxi Zhao:** Writing – review & editing, Methodology, Conceptualization.

Declaration of competing interest

The authors declare that they have no known competing financial interests or personal relationships that could have appeared to influence the work reported in this paper.

Acknowledgment

This work was supported by the National Natural Science Foundation of China (72001163 and 52072290) and the Wuhan Natural Science Foundation.

Data availability

Data will be made available on request.

References

Ali, Y., Zheng, Z., Haque, M.M., Wang, M., 2019. A game theory-based approach for modelling mandatory lane-changing behaviour in a connected environment. Transp. Res. Part C Emerging Technol. 106, 220–242. https://doi.org/10.1016/j.trc.2019.07.011.

Ali, Y., Zheng, Z., Haque, M.M., Yildirimoglu, M., Washington, S., 2021. CLACD: A complete LAne-Changing decision modeling framework for the connected and traditional environments. Transp. Res. Part C Emerging Technol. 128, 103162. https://doi.org/10.1016/j.trc.2021.103162.

Berndt, H., Emmert, J., Dietmayer, K., 2008. Continuous driver intention recognition with hidden markov models. In: In: 2008 11th International IEEE Conference on Intelligent Transportation Systems. Presented at the 2008 11th International IEEE Conference on Intelligent Transportation Systems, pp. 1189–1194. https://doi.org/10.1109/ITSC.2008.4732630.

Chen, Q., Gu, R., Huang, H., Lee, J., Zhai, X., Li, Y., 2021a. Using vehicular trajectory data to explore risky factors and unobserved heterogeneity during lane-changing. Accid. Anal. Prev. 151, 105871. https://doi.org/10.1016/j.aap.2020.105871.

Chen, Q., Huang, H., Li, Y., Lee, J., Long, K., Gu, R., Zhai, X., 2021b. Modeling accident risks in different lane-changing behavioral patterns. Anal. Methods Accid. Res 30, 100159. https://doi.org/10.1016/j.amar.2021.100159.

Chen, Z., Qin, X., Shaon, M.R.R., 2018. Modeling lane-change-related crashes with lane-specific real-time traffic and weather data. J. Intell. Transp. Syst. 22, 291–300. https://doi.org/10.1080/15472450.2017.1309529.

Chen, T., Shi, X., Wong, Y.D., 2019. Key feature selection and risk prediction for lane-changing behaviors based on vehicles' trajectory data. Accid. Anal. Prev. 129, 156–169. https://doi.org/10.1016/j.aap.2019.05.017.

Chen, T., Shi, X., Wong, Y.D., Yu, X., 2020. Predicting lane-changing risk level based on vehicles' space-series features: A pre-emptive learning approach. Transportation Research Part C: Emerging Technologies 116, 102646. https://doi.org/10.1016/j.trc.2020.102646.

Chen, T., Shi, X., Wong, Y.D., 2021c. A lane-changing risk profile analysis method based on time-series clustering. Physica A 565, 125567. https://doi.org/10.1016/j.physa.2020.125567.

Cui, H., Radosavljevic, V., Chou, F.-C., Lin, T.-H., Nguyen, T., Huang, T.-K., Schneider, J., Djuric, N., 2019. Multimodal trajectory predictions for autonomous driving using deep convolutional networks. In: In: 2019 International Conference on Robotics and Automation (ICRA). Presented at the 2019 International Conference on Robotics and Automation (ICRA), pp. 2090–2096. https://doi.org/10.1109/ICRA.2019.8793868.

Dang, R., Zhang, F., Wang, J., Yi, S., Li, K., 2013. Analysis of Chinese driver's lane change characteristic based on real vehicle tests in highway, in: 16th International IEEE Conference on Intelligent Transportation Systems (ITSC 2013). Presented at the 16th International IEEE Conference on Intelligent Transportation Systems (ITSC 2013), pp. 1917–1922. https://doi.org/10.1109/ITSC.2013.6728509.

Das, A., Ahmed, M.M., 2021. Exploring the effect of fog on lane-changing characteristics utilizing the SHRP2 naturalistic driving study data. Journal of Transportation Safety & Security 13, 477–502. https://doi.org/10.1080/19439962.2019.1645777.

Deo, N., Trivedi, M.M., 2018. convolutional social pooling for vehicle trajectory prediction. In: 2018 IEEE/CVF Conference on Computer Vision and Pattern Recognition Workshops (CVPRW) Presented at the 2018 IEEE/CVF Conference on Computer Vision and Pattern Recognition Workshops (CVPRW), pp. 1549–15498. https://doi.org/10.1109/CVPRW.2018.00196.

Derse, O., Göçmen, E., 2021. Transportation mode choice using fault tree analysis and mathematical modeling approach. Journal of Transportation Safety & Security 13, 642–660. https://doi.org/10.1080/19439962.2019.1665600.

Ding, W., Chen, J., Shen, S., 2019. Predicting vehicle behaviors over an extended horizon using behavior interaction network. In: 2019 International Conference on Robotics and Automation (ICRA). Presented at the 2019 International Conference on Robotics and Automation (ICRA), pp. 8634–8640. https://doi.org/10.1109/ICRA.2019.8794146.

Fu, C., Sayed, T., 2021. Comparison of threshold determination methods for the deceleration rate to avoid a crash (DRAC)-based crash estimation. Accid. Anal. Prev. 153, 106051. https://doi.org/10.1016/j.aap.2021.106051.

Gao, K., Li, X., Chen, B., Hu, L., Liu, J., Du, R., Li, Y., 2023. Dual transformer based prediction for lane change intentions and trajectories in mixed traffic environment. IEEE Trans. Intell. Transp. Syst. 24, 6203–6216. https://doi.org/10.1109/TITS.2023.3248842.

Gipps, P.G., 1986. A model for the structure of lane-changing decisions. Transp. Res. B Methodol. 20, 403–414. https://doi.org/10.1016/0191-2615(86)90012-3.

Glaser, S., Vanholme, B., Mammar, S., Gruyer, D., Nouveliere, L., 2010. Maneuver-based trajectory planning for highly autonomous vehicles on real road with traffic and driver interaction. IEEE Trans. Intell. Transp. Syst. 11, 589–606.

Guo, Y., Chen, Y., Gu, X., Guo, J., Zheng, S., Zhou, Y., 2024. Dynamic traffic graph based risk assessment of multivehicle lane change interaction scenarios. Physica A 643, 129791. https://doi.org/10.1016/j.physa.2024.129791.

He, K., Zhang, X., Ren, S., Sun, J., 2015. Deep Residual Learning for Image Recognition.

Hidas, P., 2005. Modelling vehicle interactions in microscopic simulation of merging and weaving. Transp. Res. C: Emerging Technologies 13, 37–62. https://doi.org/10.1016/j.trc.2004.12.003.

Hochreiter, S., Schmidhuber, J., 1997. Long short-term memory. Neural Comput. 9, 1735–1780. https://doi.org/10.1162/neco.1997.9.8.1735.

Hoel, C.-J., Wolff, K., Laine, L., 2018. Automated speed and lane change decision making using deep reinforcement learning. In: 2018 21st International Conference on Intelligent Transportation Systems (ITSC). Presented at the 2018 21st International Conference on Intelligent Transportation Systems (ITSC), pp. 2148–2155. https://doi.org/10.1109/ITSC.2018.8569568.

Huang, H., Wang, J., Fei, C., Zheng, X., Yang, Y., Liu, J., Wu, X., Xu, Q., 2020. A probabilistic risk assessment framework considering lane-changing behavior interaction. Sci. China Inf. Sci. 63, 190203. https://doi.org/10.1007/s11432-019-2983-0.

Humaira, H., Rasyidah, R., 2020. Determining The Appropiate Cluster Number Using Elbow Method for K-Means Algorithm. Presented at the Proceedings of the 2nd Workshop on Multidisciplinary and Applications (WMA) 2018, 24-25 January 2018, Padang, Indonesia.

Izquierdo, R., Parra, I., Munoz-Bulnes, J., Fernandez-Llorca, D., Sotelo, M.A., 2017. Vehicle trajectory and lane change prediction using ANN and SVM classifiers. In: 2017 IEEE 20th International Conference on Intelligent Transportation Systems (ITSC). Presented at the 2017 IEEE 20th International Conference on Intelligent Transportation Systems (ITSC), pp. 1–6. https://doi.org/10.1109/ITSC.2017.8317838.

Ji, A., Levinson, D., 2020. A review of game theory models of lane changing. Transportmetrica a: Transport Science 16, 1628–1647. https://doi.org/10.1080/23249935.2020.1770368.

Khatib, O., 1986. Real-time obstacle avoidance for manipulators and mobile robots. The International Journal of Robotics Research 5, 90–98. https://doi.org/10.1177/027836498600500106.

Knoop, V.L., Buisson, C., 2015. Calibration and validation of probabilistic discretionary lane-change models. IEEE Trans. Intell. Transp. Syst. 16, 834–843. https://doi.org/10.1109/TITS.2014.2340434.

Krajewski, R., Bock, J., Kloeker, L., Eckstein, L., 2018. The highD dataset: A drone dataset of naturalistic vehicle trajectories on german highways for validation of highly automated driving systems. In: In: 2018 21st International Conference on Intelligent Transportation Systems (ITSC). Presented at the 2018 21st International Conference on Intelligent Transportation Systems (ITSC), pp. 2118–2125. https://doi.org/10.1109/ITSC.2018.8569552.

Laval, J.A., Leclercq, L., 2008. Microscopic modeling of the relaxation phenomenon using a macroscopic lane-changing model. Transp. Res. B Methodol. 42, 511–522. https://doi.org/10.1016/j.trb.2007.10.004.

Lee, W.S., Grosh, D.L., Tillman, F.A., Lie, C.H., 1985. Fault tree analysis, methods, and applications a review. IEEE Transactions on Reliability R-34 194–203. https://doi.org/10.1109/TR.1985.5222114.

Li, Z.-N., Huang, X.-H., Mu, T., Wang, J., 2022c. Attention-based lane change and crash risk prediction model in highways. IEEE Trans. Intell. Transp. Syst. 23, 22909–22922. https://doi.org/10.1109/TITS.2022.3193682.

Li, G., Li, S.E., Jia, L., Wang, W., Cheng, B., Chen, F., 2015. Driving maneuvers analysis using naturalistic highway driving data. In: In: 2015 IEEE 18th International Conference on Intelligent Transportation Systems. Presented at the 2015 IEEE 18th International Conference on Intelligent Transportation Systems, pp. 1761–1766. https://doi.org/10.1109/ITSC.2015.286.

Li, M., Li, Z., Xu, C., Liu, T., 2020. Short-term prediction of safety and operation impacts of lane changes in oscillations with empirical vehicle trajectories. Accid. Anal. Prev. 135, 105345. https://doi.org/10.1016/j.aap.2019.105345.

Li, Y., Li, L., Ni, D., 2022b. Comparative univariate and regression survival analysis of lane-changing duration characteristic for heavy vehicles and passenger cars. Journal of Transportation Engineering, Part a: Systems 148, 04022109. https://doi.org/10.1061/JTEPBS.0000771.

Li, X., Wang, W., Roetting, M., 2019. Estimating driver's lane-change intent considering driving style and contextual traffic. IEEE Trans. Intell. Transp. Syst. 20, 3258–3271. https://doi.org/10.1109/TITS.2018.2873595.

Li, G., Yang, Y., Li, S., Qu, X., Lyu, N., Li, S.E., 2022a. Decision making of autonomous vehicles in lane change scenarios: Deep reinforcement learning approaches with risk awareness. Transportation Research Part C: Emerging Technologies 134, 103452. https://doi.org/10.1016/j.trc.2021.103452.

Liu, Y., Wang, X., Li, L., Cheng, S., Chen, Z., 2019. A novel lane change decision-making model of autonomous vehicle based on support vector machine. IEEE Access 7, 26543–26550. https://doi.org/10.1109/ACCESS.2019.2900416.

Liu, Y., Zhou, A., Wang, Y., Peeta, S., 2023. Proactive longitudinal control to preclude disruptive lane changes of human-driven vehicles in mixed-flow traffic. Control Eng. Pract. 136, 105522. https://doi.org/10.1016/j.conengprac.2023.105522.

Lyu, N., Wen, J., Duan, Z., Wu, C., 2022. Vehicle trajectory prediction and cut-in collision warning model in a connected vehicle environment. IEEE Trans. Intell. Transp. Syst. 23, 966–981. https://doi.org/10.1109/TITS.2020.3019050.

Mahajan, V., Katrakazas, C., Antoniou, C., 2020. Prediction of lane-changing maneuvers with automatic labeling and deep learning. Transp. Res. Rec. 2674, 336–347. https://doi.org/10.1177/0361198120922210.

Mahajan, V., Katrakazas, C., Antoniou, C., 2022. Crash risk estimation due to lane changing: a data-driven approach using naturalistic data. IEEE Trans. Intell. Transport. Syst. 23, 3756–3765. https://doi.org/10.1109/TITS.2020.3042097.

Mikolov, T., Karafiát, M., Burget, L., Cernockỳ, J., Khudanpur, S., 2010. Recurrent neural network based language model., in: Interspeech. Makuhari, pp. 1045–1048.

Mozaffari, S., Arnold, E., Dianati, M., Fallah, S., 2022a. Early lane change prediction for automated driving systems using multi-task attention-based convolutional neural networks. IEEE Trans. Intell. Veh. 7, 758–770. https://doi.org/10.1109/TIV.2022.3161785.

Mozaffari, S., Al-Jarrah, O.Y., Dianati, M., Jennings, P., Mouzakitis, A., 2022b. Deep learning-based vehicle behavior prediction for autonomous driving applications: a review. IEEE Trans. Intell. Transport. Syst. 23, 33–47. https://doi.org/10.1109/TITS.2020.3012034.

Noh, S., An, K., 2017. Risk assessment for automatic lane change maneuvers on highways. In: 2017 IEEE International Conference on Robotics and Automation (ICRA). Presented at the 2017 IEEE International Conference on Robotics and Automation (ICRA), pp. 247–254. https://doi.org/10.1109/ICRA.2017.7989031.

Officials, A.A. of S.H. and T., 2011. A Policy on Geometric Design of Highways and Streets, 2011. AASHTO.

Oh, C., Oh, J., Min, J., 2009. Real-time detection of hazardous traffic events on freeways: methodology and prototypical implementation. Transp. Res. Rec. 2129, 35–44. https://doi.org/10.3141/2129-05.

Park, H., Oh, C., Moon, J., Kim, S., 2018. Development of a lane change risk index using vehicle trajectory data. Accid. Anal. Prev. 110, 1–8. https://doi.org/10.1016/j.aap.2017.10.015.

Perumal, P.S., Sujasree, M., Chavhan, S., Gupta, D., Mukthineni, V., Shimgekar, S.R., Khanna, A., Fortino, G., 2021. An insight into crash avoidance and overtaking advice systems for Autonomous Vehicles: A review, challenges and solutions. Eng. Appl. Artif. Intel. 104, 104406. https://doi.org/10.1016/j.engappai.2021.104406.

Salvucci, D.D., Liu, A., 2002. The time course of a lane change: Driver control and eye-movement behavior. Transport. Res. F: Traffic Psychol. Behav. 5, 123–132. https://doi.org/10.1016/S1369-8478(02)00011-6.

Satzoda, R.K., Gunaratne, P., Trivedi, M.M., 2015. Drive quality analysis of lane change maneuvers for naturalistic driving studies. In: In: 2015 IEEE Intelligent Vehicles Symposium (IV). Presented at the 2015 IEEE Intelligent Vehicles Symposium (IV), pp. 654–659. https://doi.org/10.1109/IVS.2015.7225759.

Scheel, O., Nagaraja, N.S., Schwarz, L., Navab, N., Tombari, F., 2019. Attention-based Lane Change Prediction, in: 2019 International Conference on Robotics and Automation (ICRA). Presented at the 2019 International Conference on Robotics and Automation (ICRA), IEEE, Montreal, QC, Canada, pp. 8655–8661. https://doi.org/10.1109/ICRA.2019.8793648.

Schreiber, M., Hoermann, S., Dietmayer, K., 2019. Long-Term Occupancy Grid Prediction Using Recurrent Neural Networks, in: 2019 International Conference on Robotics and Automation (ICRA). Presented at the 2019 International Conference on Robotics and Automation (ICRA), IEEE, Montreal, QC, Canada, pp. 9299–9305. https://doi.org/10.1109/ICRA.2019.8793582.

Shangguan, Q., Fu, T., Wang, J., Fang, S., Fu, L., 2022. A proactive lane-changing risk prediction framework considering driving intention recognition and different lane-changing patterns. Accid. Anal. Prev. 164, 106500. https://doi.org/10.1016/j.aap.2021.106500.

Siebinga, O., Zgonnikov, A., Abbink, D., 2023. Uncovering variability in human driving behavior through automatic extraction of similar traffic scenes from large naturalistic datasets. https://doi.org/10.48550/arXiv.2206.13386.

Song, R., Li, B., 2022. Surrounding vehicles' lane change maneuver prediction and detection for intelligent vehicles: a comprehensive review. IEEE Trans. Intell. Transport. Syst. 23, 6046–6062. https://doi.org/10.1109/TITS.2021.3076164.

Sun, D.J., Elefteriadou, L., 2012. A driver behavior-based lane-changing model for urban arterial streets. Transp. Sci. https://doi.org/10.1287/trsc.1120.0435.

Tan, X., Zhang, Y., Wang, J., 2022. Assessing the potential impacts of connected vehicle systems on Driver's situation awareness and driving performance. Transport. Res. F: Traffic Psychol. Behav. 84, 177–193. https://doi.org/10.1016/j.trf.2021.11.016.

Toledo, T., Zohar, D., 2007. Modeling duration of lane changes. Transp. Res. Rec. 1999, 71–78. https://doi.org/10.3141/1999-08.

Vanholme, B., Glaser, S., Mammar, S., Gruyer, D., 2009. Manoeuvre-based trajectory planning for highly autonomous vehicles on real road with traffic. In: In: 2009 European Control Conference (ECC). IEEE, pp. 3281–3286.

Wang, P., Chan, C.-Y., de La Fortelle, A., 2018. A Reinforcement Learning Based Approach for Automated Lane Change Maneuvers, in: 2018 IEEE Intelligent Vehicles Symposium (IV). Presented at the 2018 IEEE Intelligent Vehicles Symposium (IV), pp. 1379–1384. https://doi.org/10.1109/IVS.2018.8500556.

Wang, X., Guo, Y., Bai, C., Yuan, Q., Liu, S., Han, J., 2021. Driver's intention identification with the involvement of emotional factors in two-lane roads. IEEE Trans. Intell. Transport. Syst. 22, 6866–6874. https://doi.org/10.1109/TITS.2020.2995837.

Wang, A., Ye, Y., Song, X., Zhang, S., Yu, J.J.Q., 2023. Traffic prediction with missing data: a multi-task learning approach. IEEE Trans. Intell. Transp. Syst. 24, 4189–4202. https://doi.org/10.1109/TITS.2022.3233890.

Wen, H., Chen, Z., 2023. Modeling the risks of lane-changing on adjacent sections of tunnel entrances. IEEE Access 11, 65312–65326. https://doi.org/10.1109/ACCESS.2023.3282108.

Wirthmuller, F., Klimke, M., Schlechtriemen, J., Hipp, J., Reichert, M., 2021. Predicting the time until a vehicle changes the lane using LSTM-based recurrent neural networks. IEEE Robot. Autom. Lett. 6, 2357–2364. https://doi.org/10.1109/LRA.2021.3058930.

Woo, S., Park, J., Lee, J.-Y., Kweon, I.S., 2018. Cbam: Convolutional block attention module. In: Proceedings of the European Conference on Computer Vision (ECCV), pp. 3–19.

Wu, J., Wen, H., Qi, W., 2020. A new method of temporal and spatial risk estimation for lane change considering conventional recognition defects. Accid. Anal. Prev. 148, 105796. https://doi.org/10.1016/j.aap.2020.105796.

Xie, D.-F., Fang, Z.-Z., Jia, B., He, Z., 2019. A data-driven lane-changing model based on deep learning. Transp. Res. Part C Emerging Technol. 106, 41–60. https://doi.org/10.1016/j.trc.2019.07.002.

Xing, Y., Lv, C., Wang, H., Cao, D., Velenis, E., 2020. An ensemble deep learning approach for driver lane change intention inference. Transp. Res. Part C Emerging Technol. 115, 102615. https://doi.org/10.1016/j.trc.2020.102615.

Xing, Y., Lv, C., Cao, D., Velenis, E., 2021. Multi-scale driver behavior modeling based on deep spatial-temporal representation for intelligent vehicles. Transp. Res. Part C Emerging Technol. 130, 103288. https://doi.org/10.1016/j.trc.2021.103288.

Xu, C., Wang, C., Ding, Y., Wang, W., 2020. Investigation of extremely severe traffic crashes using fault tree analysis. Transp. Lett. 12, 149–156. https://doi.org/10.1080/19427867.2018.1540146.

Xue, Q., Xing, Y., Lu, J., 2022. An integrated lane change prediction model incorporating traffic context based on trajectory data. Transp. Res. Part C Emerging Technol. 141, 103738. https://doi.org/10.1016/j.trc.2022.103738.

Yang, L., Li, X., Guan, W., Zhang, H.M., Fan, L., 2018. Effect of traffic density on drivers' lane change and overtaking maneuvers in freeway situation—A driving simulator–based study. Traffic Inj. Prev. 19, 594–600. https://doi.org/10.1080/15389588.2018.1471470.

Yuan, C., Li, Y.e., Huang, H., Wang, S., Sun, Z., Li, Y., 2022. Using traffic flow characteristics to predict real-time conflict risk: A novel method for trajectory data analysis. Anal. Methods Accid. Res 35, 100217. https://doi.org/10.1016/j.amar.2022.100217.

Zhang, Y., Lin, Q., Wang, J., Verwer, S., Dolan, J.M., 2018. Lane-change intention estimation for car-following control in autonomous driving. IEEE Trans. Intell. Veh. 3, 276–286. https://doi.org/10.1109/TIV.2018.2843178.

Zhang, Y., Shi, X., Zhang, S., Abraham, A., 2022b. A XGBoost-based lane change prediction on time series data using feature engineering for autopilot vehicles. IEEE Trans. Intell. Transp. Syst. 23, 19187–19200. https://doi.org/10.1109/TITS.2022.3170628.

Zhang, Y., Chen, Y., Gu, X., Sze, N.N., Huang, J., 2023a. A proactive crash risk prediction framework for lane-changing behavior incorporating individual driving styles. Accid. Anal. Prev. 188, 107072. https://doi.org/10.1016/j.aap.2023.107072.

Zhang, Y., Xu, Q., Wang, J., Wu, K., Zheng, Z., Lu, K., 2023b. A learning-based discretionary lane-change decision-making model with driving style awareness. IEEE Trans. Intell. Transp. Syst. 24, 68–78. https://doi.org/10.1109/TITS.2022.3217673.

Zhang, Y., Yang, Q., 2018. An overview of multi-task learning. Natl. Sci. Rev. 5, 30–43. https://doi.org/10.1093/nsr/nwx105.

Zhang, C., Zhu, F., Wang, X., Sun, L., Tang, H., Lv, Y., 2022a. Taxi demand prediction using parallel multi-task learning model. IEEE Trans. Intell. Transp. Syst. 23, 794–803. https://doi.org/10.1109/TITS.2020.3015542.

Zhao, L., Song, Y., Zhang, C., Liu, Y., Wang, P., Lin, T., Deng, M., Li, H., 2020. T-GCN: a temporal graph convolutional network for traffic prediction. IEEE Trans. Intell. Transp. Syst. 21, 3848–3858. https://doi.org/10.1109/TITS.2019.2935152.

Zheng, O., Abdel-Aty, M., Yue, L., Abdelraouf, A., Wang, Z., Mahmoud, N., 2022. CitySim: A Drone-Based Vehicle Trajectory Dataset for Safety Oriented Research and Digital Twins. https://doi.org/10.48550/arXiv.2208.11036.