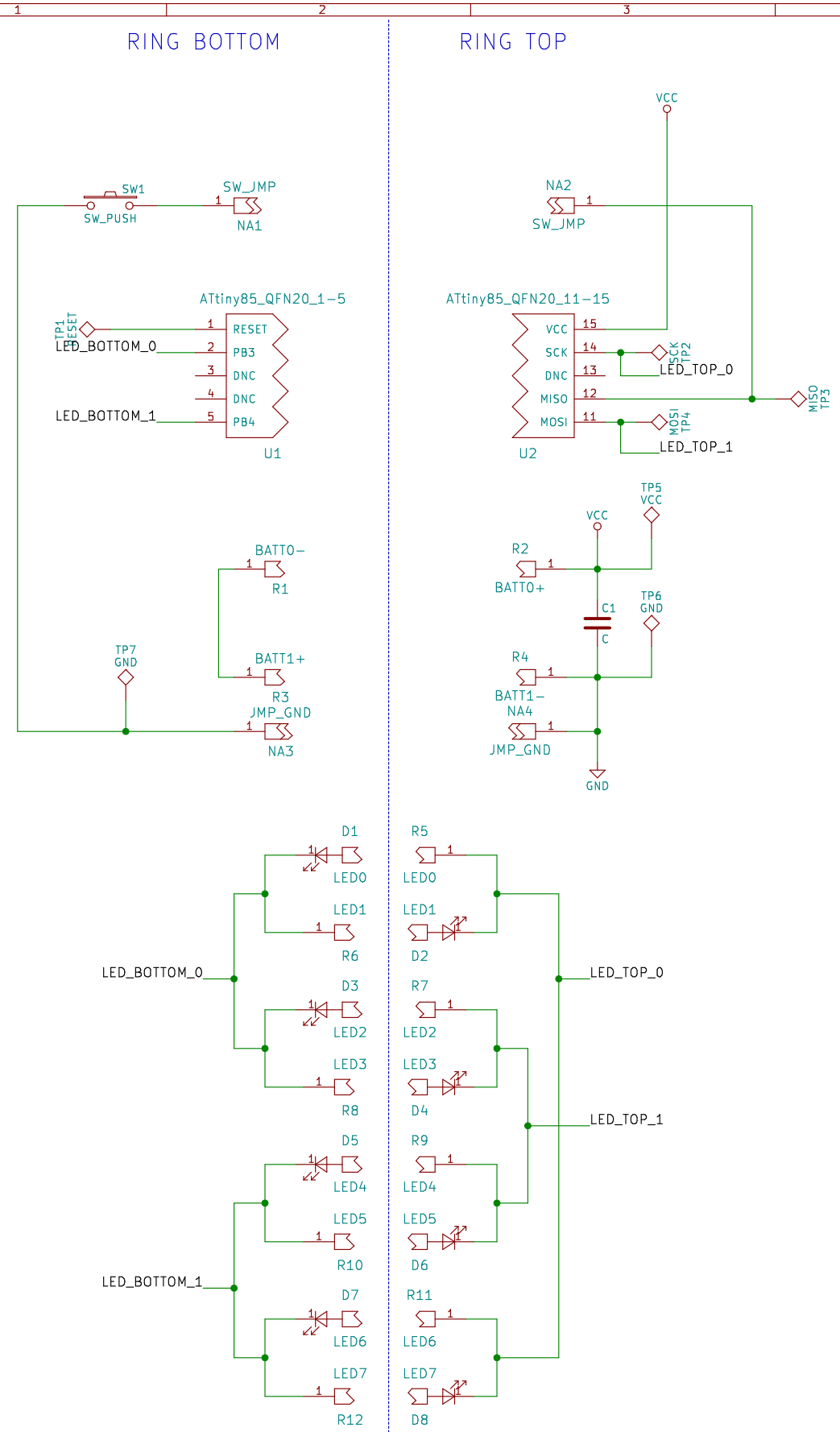

(c) copyright 2017 zach fredin
License: CC-BY-SA 4.0

Sheet: /
File: cyborg_ring.sch

Title: blink-ring

Size: USLedger	Date: 2018-05-17	Rev: C
KiCad E.D.A. kicad 4.0.7-e2-637658ubuntu14.04.1		Id: 1/1