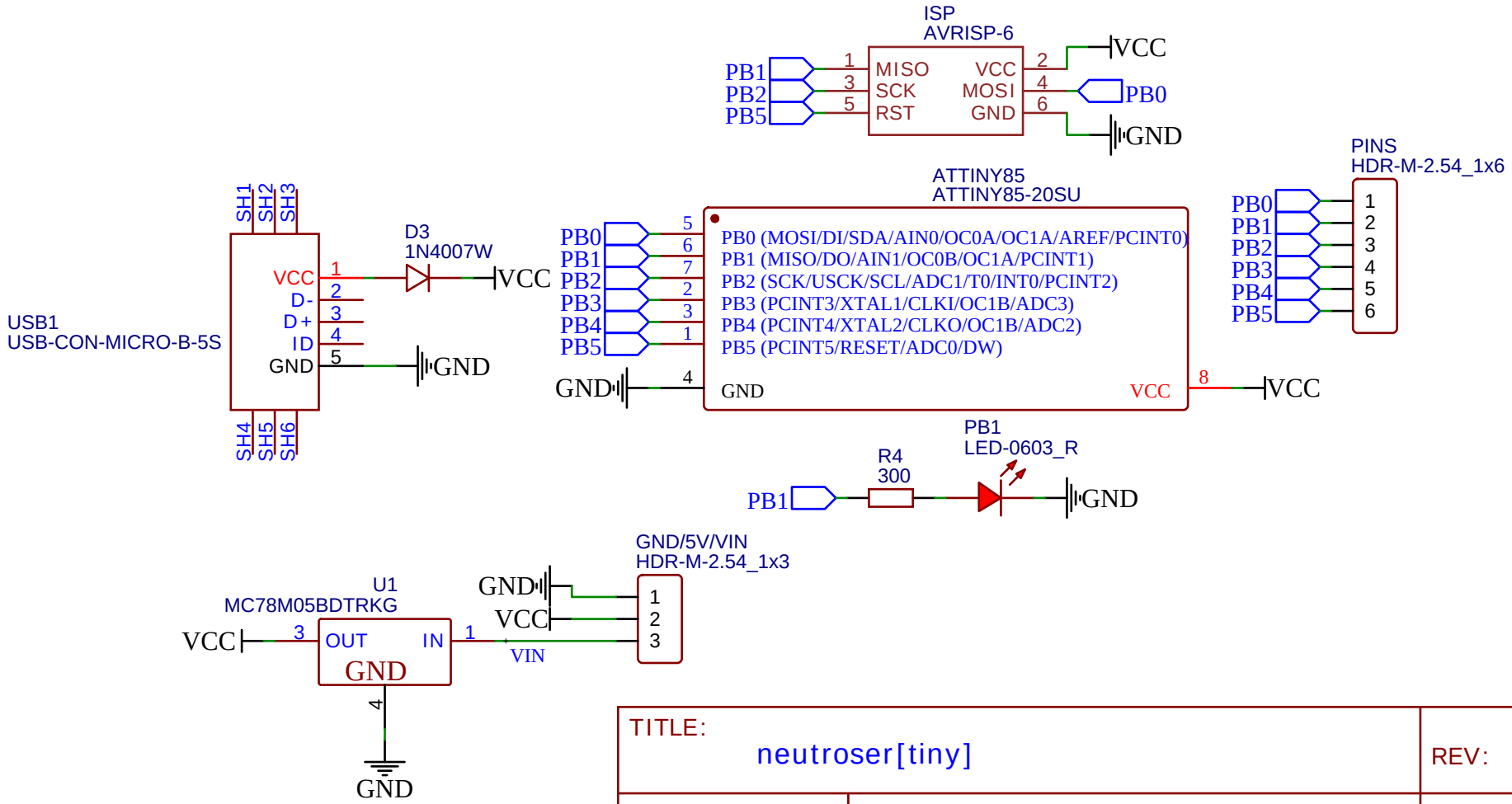

TITLE: neutroser[tiny]		REV: 1.0
NEUTROSER	Company: NEUTROSER	Sheet: 1/1
	Date: 2020-09-06 Drawn By: artegoser	