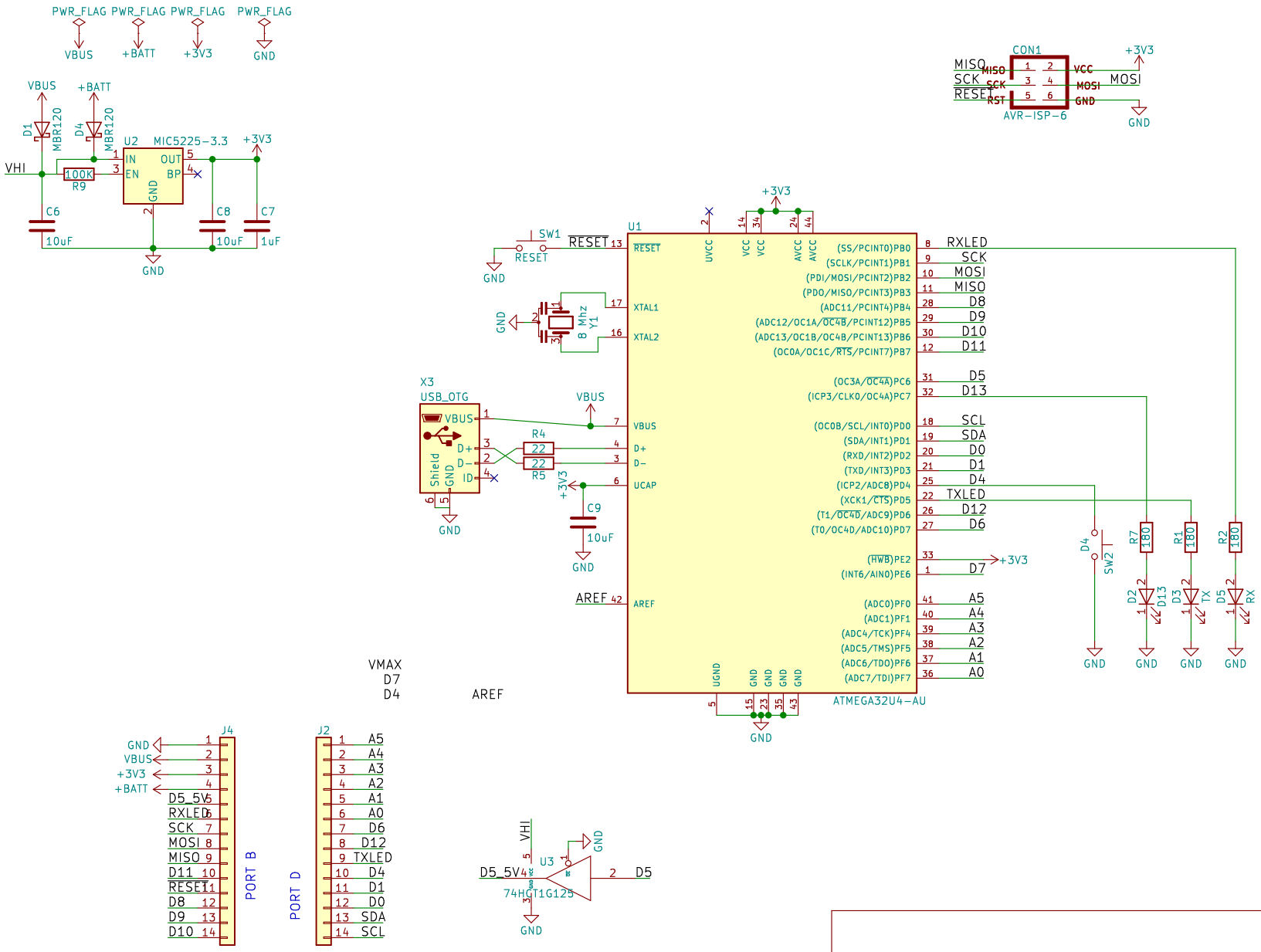

www.MakersBox.us

Sheet: /

File: project.sch

Title: 32u4

Size: A	Date:	Rev:
KiCad E.D.A. kicad 4.0.7		Id: 1/1