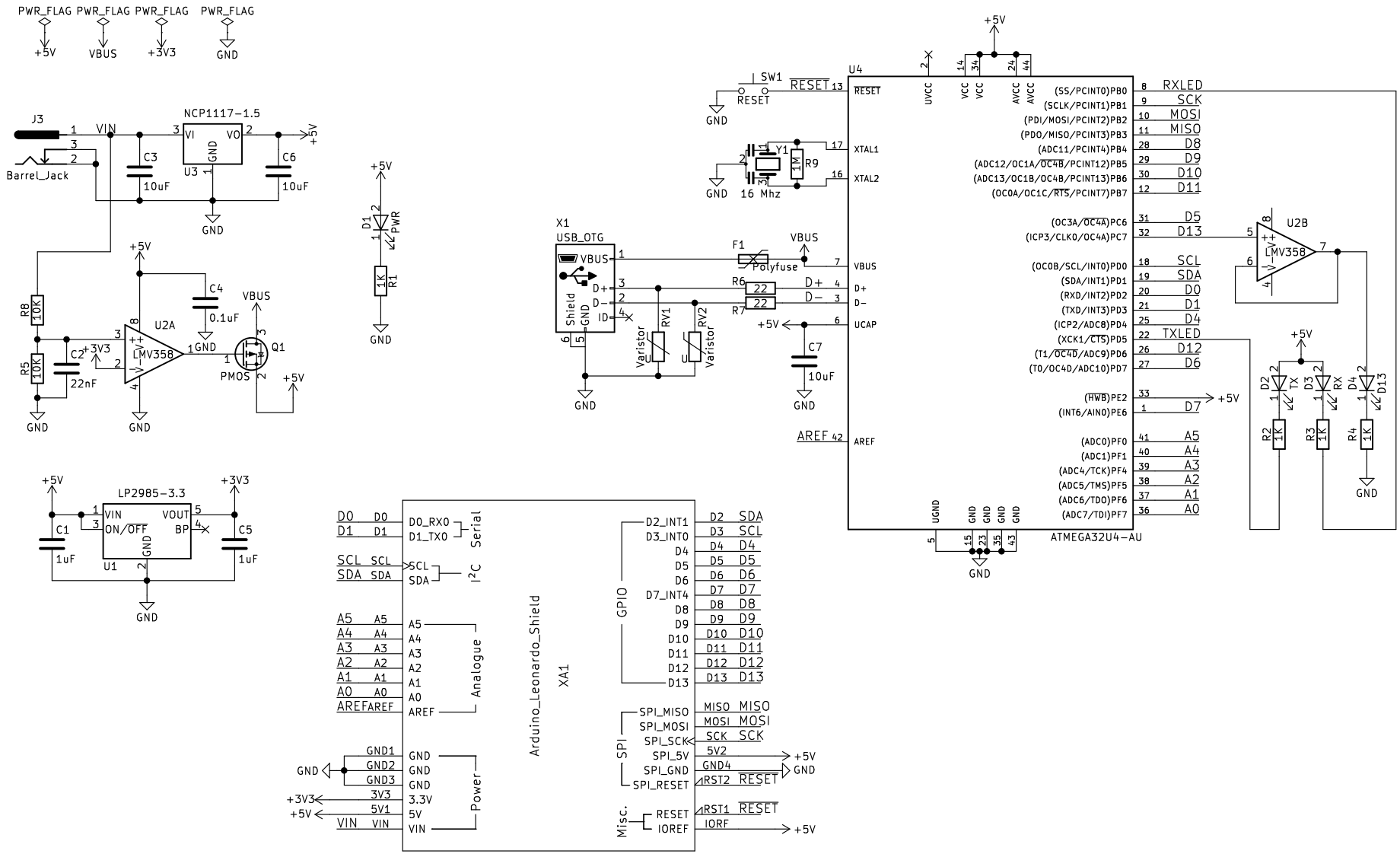

https://en.wikipedia.org/wiki/Vitruvian_Man#/media/File:Da_Vinci_Vitruve_Luc_Viatour.jpg

https://leonardodavinci.stanford.edu/submissions/clabaugh/history/leonardo.html

https://rheingoldheavy.com/arduino-from-scratch-part-5-selecting-comparator-parts/

648.ken@gmail.com
www.MakersBox.us

Sheet: /
File: project.sch

Title: Leonardo 324U

Size: A	Date: 2018-08-10	**Rev: 0.0**
KiCad E.D.A. kicad 4.0.7		Id: 1/1