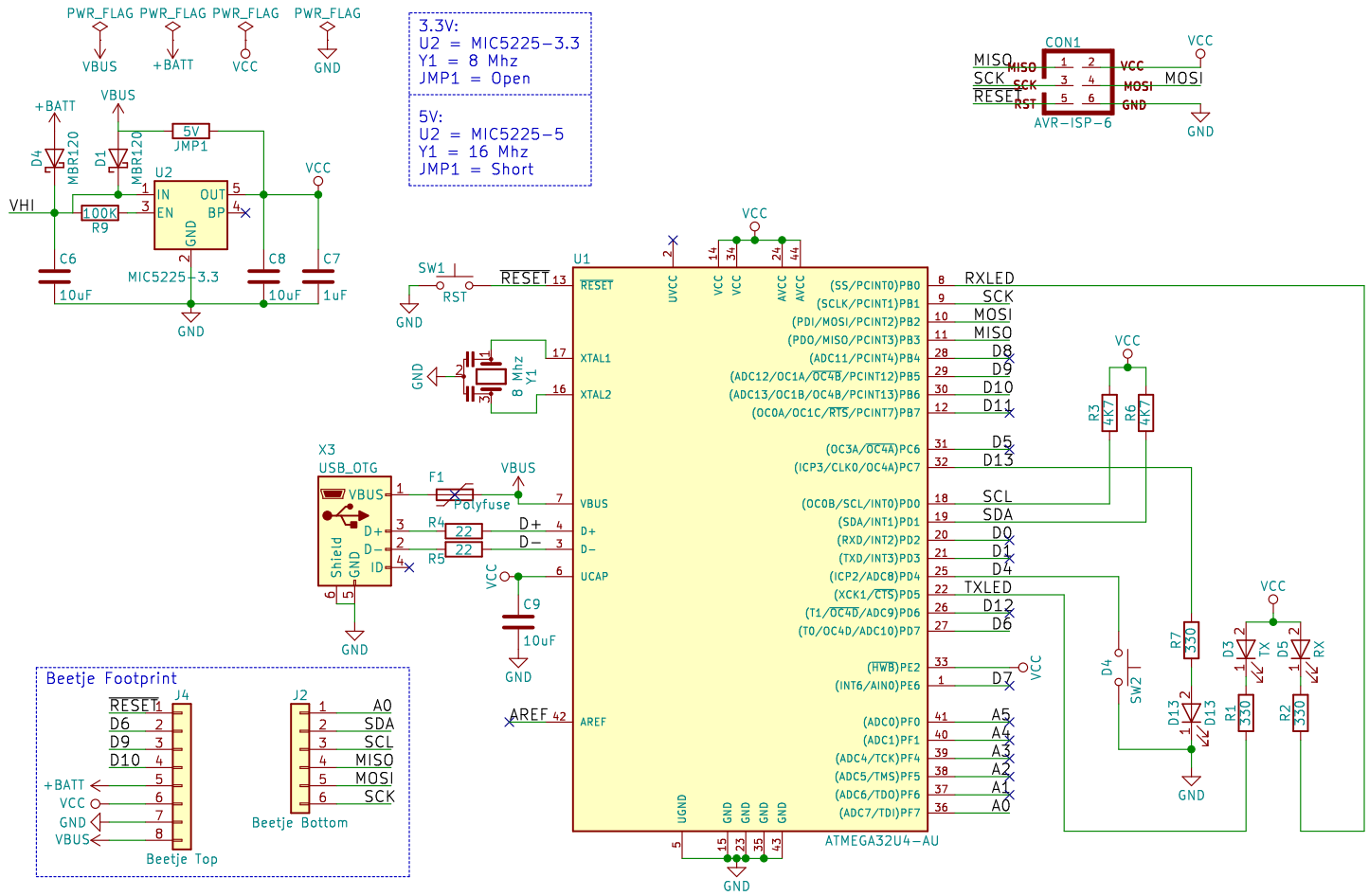

648.ken@gmail.com
www.MakersBox.us

Sheet: /
File: project.sch

Title: Beetje 32U4 Board

Size: A	Date: 2018-08-10	**Rev: 0.0**
KiCad E.D.A. kicad 4.0.7		Id: 1/1