Webasto
Marine Comfort

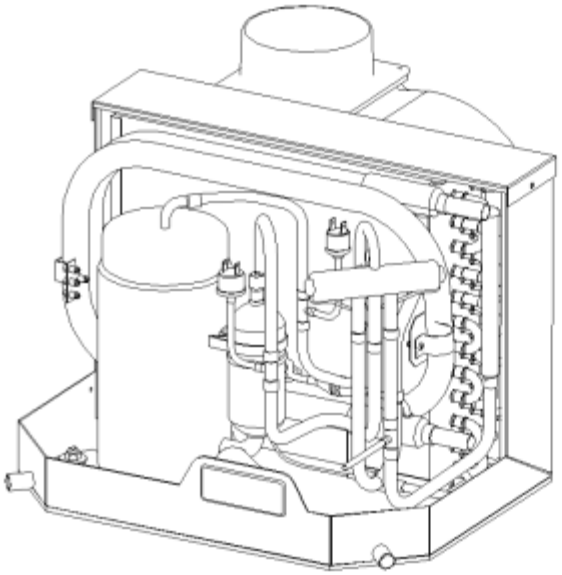

FCF5,000
FCF9,000
FCF12,000
FCF16,000
FCF24,000

FEEL COOL FAST

MARINE AIR CONDITIONER

Installation & Operation Manual

4/2011

Table of Contents

INTRODUCTION 3
PACKAGED COMPONENTS 4
OVERVIEW 4
INSTALLATION 5
Unpacking and Inspection 5
Safety Considerations 5
Placement of System 6
Blower Assembly 8
Mounting Brackets 8
Supply & Return Air Grilles and Transition Boxes 8
Ducting 9
Seawater Pump and Plumbing 9
Electrical Connections, Grounding and Bonding 11
Digital Display Installation 12
Electric Box Installation 12
Installation Checklist (Review Prior To Installation) 13
Wiring Diagrams 14
OPERATION 17
Digital Display Operation 17
Power ON/OFF 18
Sleep Mode of the digital display 18
FAN Control 18
Temperature Setting 18
Mode Setting 18
Remote Controller Operation 20
Button / Function and Description (Cover Closed) 21
Button / Function and Description (Cover Open) 22
ERROR CODES 24
TROUBLESHOOTING 25
MAINTENANCE 27
Reversing Valves 27
Seawater Strainer 27
Condenser Coil Cleaning (Seawater Acid Flush) 27
Return Air Filters 27
Winterization 28
UNIT DIMENSIONS & TECHNICAL SPECIFICATIONS 29
LIMITED WARRANTY 30
TECHNICAL ASSISTANCE 30

Introduction

Thank you for your purchase. No matter which of the following features was the reason for your purchase, we are sure it will meet your needs and give many years of efficient and trouble free use. These air conditioners are designed for marine applications incorporating the following features:

- Compact design
- High efficiency rotary compressors (5-24K)
- Cupronickel condenser coil
- Raised lance fin designed evaporator coil
- Polyester coated 2” (50mm) deep drain pan with four condensate drain locations
- Anti-vibration base pan
- Pre-charged and pre-wired systems for easy connections
- 3-speed fan motor. This eliminates all harmonic sounds and rumbles.
- Rotatable blower assembly

The controller offers the most technologically advanced design specifically made for the unique requirements of marine air conditioning. The controller has been designed with the following "user friendly" features:

- Non-volatile memory
- Low voltage display panel
- LED cabin temperature displayed in Fahrenheit or Celsius
- Multiple fan speed selections
- Compressor pressure fail safe protection
- Dehumidification Mode for humidity control

This manual is intended to provide the information necessary to ensure proper installation, operation, and maintenance of a FCF air conditioner. Improper installation can result in unsatisfactory performance and/or premature failure. Before proceeding, please read this manual in its entirety. In the interest of product improvement, specifications and design are subject to change without prior notice.

Packaged Components

ITEM	QUANTITY
Air Conditioning unit	1
Mounting Bracket	4
Fuses	2
Remote controller / Batteries	1
Digital Display / Cable	1
Duct Ring / Hardware	1
Blower Insulation Foam	1
Installation / Operation Manual	1

Overview

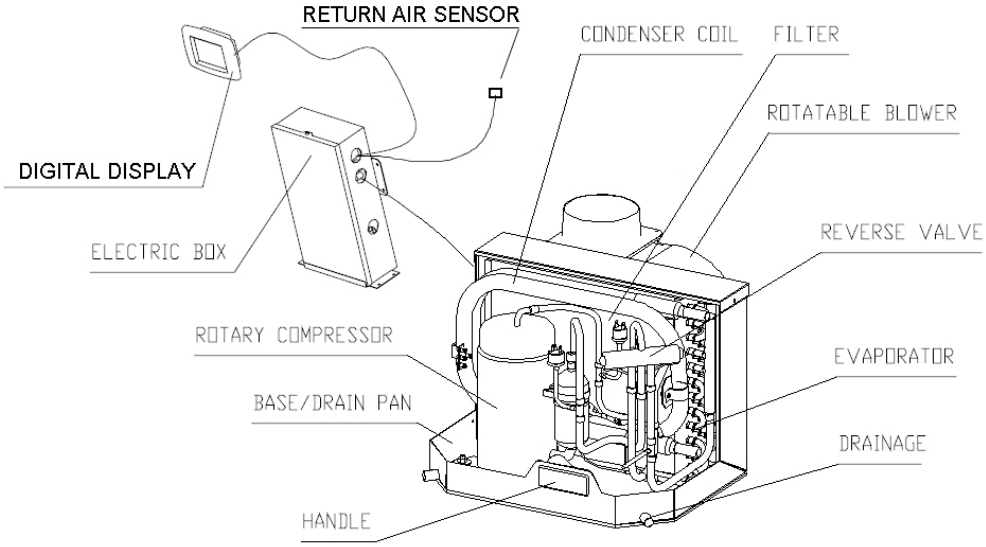

All units are manufactured without service ports

HOW IT WORKS

Your self-contained air conditioner consists of four main components and a refrigerant gas circulating through the system. The BLOWER draws warm cabin air across the fins on the EVAPORATOR where the heat from the air is transferred to the refrigerant in the evaporator coil. As the refrigerant evaporates from a liquid into a gas, it absorbs the heat from the cabin air. The COMPRESSOR then compresses the refrigerant gas and pumps it through the outer tube in the CONDENSER COIL. The seawater pump circulates cool seawater through the inner tube in the condenser coil; this cools the refrigerant and condenses it into a liquid. The heat from the refrigerant is exchanged to the seawater and discharged overboard. The liquid refrigerant is then passed through the EVAPORATOR COIL and the cycle repeats; removing heat from the cabin air lowering its temperature. The cooled air is blown through the ducting and out the supply air grille(s). For reverse cycle heating, the refrigerant flows in the opposite direction through the reversing valve. Heat is transferred from the seawater in the condenser coil to the refrigerant and then to the air blowing through the evaporator into the cabin. Seawater temperature will directly affect the air conditioners efficiency. This air conditioner can effectively cool your boat in water temperatures up to 90°F and heat in water temperatures as low as 40°F.

Installation

Unpacking and Inspection

When the equipment is received, all items should be carefully checked according to the packaged components list within this manual to ensure all components have been received. Examine components for shipping damage. If the unit is damaged, the carrier should make the proper notation on the delivery receipt acknowledging the damage.

Safety Considerations

VERY IMPORTANT: Never install your air conditioner in the bilge or engine room areas. Ensure that the selected location is sealed from direct access to bilge and/or engine room vapors. Do not terminate condensate drain line within 3' (914mm) of any outlet of engine, generator exhaust system, compartment housing an engine or generator, or in a bilge, unless the drain is connected properly to a sealed condensate or shower sump pump. Seal all cabin penetrations around condensate hoses to eliminate harmful bilge fumes in the cabin living spaces.

Installation and servicing of this system can be hazardous due to system pressure and electrical components. When working on this equipment, always observe precautions described in the literature, tags and labels attached to the unit. Follow all safety precautions. Wear safety glasses and work gloves and place a fire extinguisher close to the work area. The following is a summary of the labels on the unit:

DANGER	Indicates an imminently hazardous situation which, if not avoided, will result in death or serious injury.
WARNING	Indicates a potentially hazardous situation which, if not avoided, could result in death or serious injury.
CAUTION	Indicates a potentially hazardous situation which, if not avoided, may result in minor or moderate injury.
☞	Special note. Make sure to read before proceeding.

DANGER Electrical shock hazard. Disconnect voltage at main panel or power source before opening any cover. Failure to comply may result in injury or death.

WARNING This component does not meet federal requirements for ignition protection. Do not install in spaces containing gasoline engines, tanks, LPG/CPG cylinders, regulators, valves or fuel line fittings. Failure to comply may result in injury or death.

☞ Notice the 115V series and the 230V series are charged with Hydro fluorocarbon (HFC) refrigerant R410A. Effective July 1, 1992, it shall be unlawful for any person to knowingly vent or otherwise knowingly release any class 1 (CFC) or class 2 (H CFC) substance as a refrigerant in a manner which permits such substance to enter the atmosphere per the clean air act of 1990. Public law 101-549 title IV section 608-c. Failure to comply may result in severe penalties, including fines and imprisonment.

CAUTION To minimize the hazard of electrical shock and personal injury, this component must be effectively grounded. Refer to the installation guidelines for further information. Caution! High compressor temperature is normal. Do not touch!

Placement of System

Selecting a good location for your air conditioner is the most important part of your preparation. Be sure to consider the size of the area you are cooling, the air distribution needs, and the size of the unit you have chosen. Keeping in mind that cool air has a tendency to fall; it is highly recommended that you locate the supply air grille as high as possible in the cabin. The ducting should be run as straight, smooth and taut as possible minimizing the number of 90 degree bends. See diagram below.

Size of Sealed room

Ensure the area which the air conditioner is located is not too small otherwise it will affect proper operation. See the diagram below.

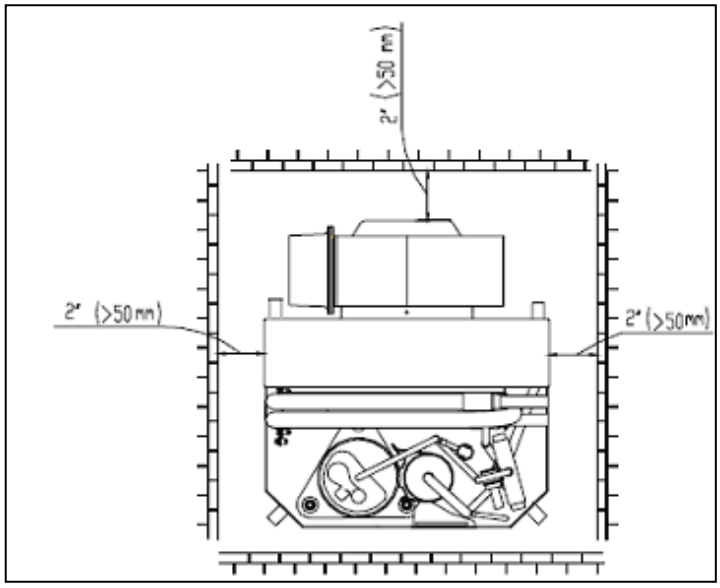

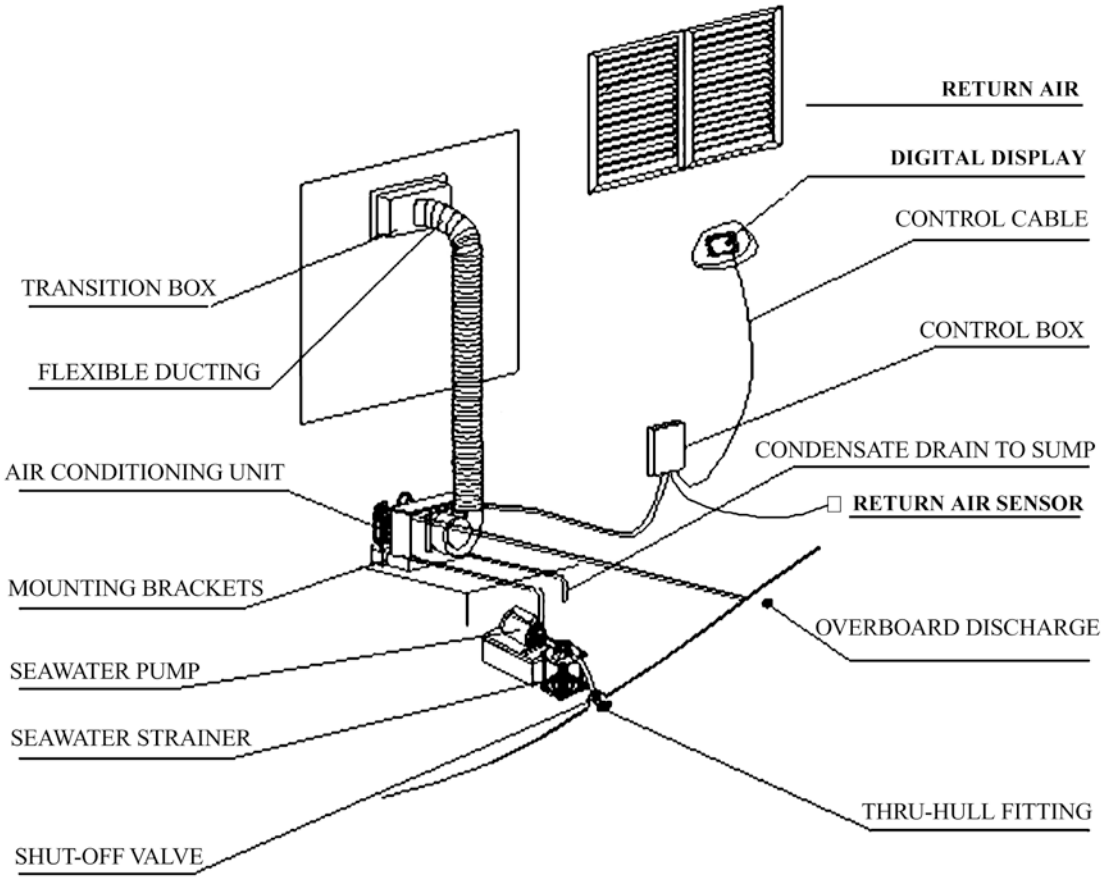

The unit should be installed as low as possible, **BUT NEVER IN THE BILGE OR ENGINE ROOM AREAS, ENSURE THAT THE SELECTED LOCATION IS SEALED FROM DIRECT ACCESS TO BILGE AND/OR ENGINE ROOM VAPORS.** Installing the unit as low as possible (such as under a V-berth, dinette seat or bottom of a locker) and ducting the supply air as high as possible, creates an ideal airflow condition. This type of installation will prevent short or premature cycling.

The unit should be positioned on a firm, level, horizontal surface and the condensate drain line should run downward from the unit to a suitable drain location. Plan all Connections, which must be made including ducting, condensate drain, and seawater in and out, electrical power connections, location of control, and seawater pump placement, to assure easy access for routing and servicing.

Tools required:

- Screws drivers
- Pliers
- Pipe wrench
- Wire cutters/crimpers
- Drill & bit set
- Jigsaw
- Duct tape
- Electrical tape
- Thread sealer
- Bedding compound to seal thru hull fittings
- Hardware to secure unit, pump, strainer, grilles & electrical box

Condensate Drains

The condensate drain pan is 2” (50mm) deep with four drain locations. During conditions of high humidity, condensate may be produced at a rate of approximately 1/2 gallon per hour (1.9 liters per hour). It is important to route condensate drains downward to a sump pump. It is not recommended to route condensate drains to the bilge. After the condensate drain installation is complete, test the installation by pouring water into the pan and checking for good flow.

For installation of the condensate drain:

- Attach a 5/8” I.D. reinforced hose to the hose barb and secure with stainless steel hose clamps.
- Install the condensate drain hose downhill from the unit and aft to a sump.
- Four drain fittings may be used and the hoses joined together with a tee fitting provided there is a minimum 2" drop from the bottom of the base pan to the tee connection.

Do not terminate condensate drain line within three 3’ (914mm) of any outlet of engine, generator exhaust systems, compartment housing an engine or generator, nor in a bilge, unless the drain is connected properly to a sealed condensate or shower sump pump. Seal all condensate hose penetrations.

Blower Assembly

You can achieve multi-directional supply air discharge from a single unit by rotating the blower to the desired position in 45° increments. It is ideal for tight installations as 360° of rotation is available with which to position the blower. Its advanced design allows the blower to be easily removed for rotating or servicing by removing 4 screws. Rotate the blower to allow the most direct flow of air to the supply air grille.

After the blower has been properly positioned, make sure to install the supplied strip of insulation foam around the collar to prevent condensation build up.

Mounting Brackets

The air conditioning unit is supplied with a base pan that also serves as a condensate pan. Mounting clip brackets (4) are provided to secure the base pan to a flat, horizontal surface. Hardware for the mounting clips must be provided by the installer as needed.

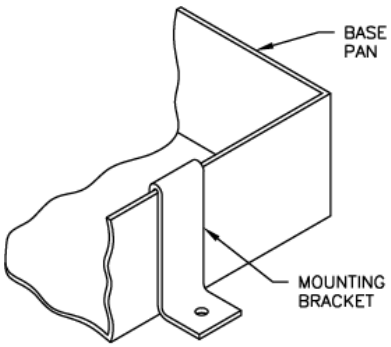

Supply & Return Air Grilles and Transition Boxes

Install the supply air grille as high as possible in a location that will provide uniform air distribution throughout the cabin. Grille louvers should be directed properly for best air flow. The return air grille should be installed as low and close to the air conditioner as possible to insure direct uninterrupted airflow to the evaporator. The return air grille should have a minimum four inches (4') of clearance in front of it, free from any furniture or other obstructions. In no instance should a supply air discharge be directed towards a return air grille, as this will cause the system to short cycle. Allow for adequate clearance behind the supply air grille(s) for the transition box and ducting connection. See the Maintenance section of this manual for return air filter cleaning instructions.

Ducting

Good airflow is critical for the performance of the entire system. It is highly dependent on the quality of the ducting installation. The ducting should be run as straight, smooth and taut as possible minimizing the number of 90 degree bends (two tight 90° bends can reduce airflow by 25%). If a transition box is used, the total area of supply air ducts going out of the box should at least equal the area of the supply duct feeding the box. To calculate the square inch area of a round duct, multiply the radius by itself (r^2) and multiply that number by 3.1416(π). The following is a summary of proper ducting connections:

1. Pull back the fiberglass insulation exposing the inner Mylar duct hose.
2. Slide the Mylar duct hose around the mount ring until it bottoms out.
3. Screw 3 or 4 stainless steel sheet metal screws through the duct hose into the transition ring. Make sure to catch the wire in the duct hose with the heads of the screws. Use finish washers with the screws if necessary. Do not use band clamps, as the hose will slide off.
4. Wrap duct tape around the ducting and ring joint to prevent any air leaks.
5. Pull the insulation back up over the Mylar to the ring and tape this joint.
6. Remove excess ducting and use the same connection method at the supply air grille.

All ducting should:

- Be insulated and appropriately sized for each application.
- Run as smoothly and taut as possible.
- Have as few bends or loops as possible.
- Be securely fastened to prevent sagging or chafing during vessel operation.
- Have all excess ducting lengths trimmed off.
- Not be flattened or kinked.
- Be properly protected against potential damage when routed through open areas or bulkheads.

Seawater Pump and Plumbing

Several guidelines should be followed during the installation of the seawater system. If the circulation pump is centrifugal and not self-priming, it must be mounted so that it is always at least 1’ (305mm) below the water line regardless of which tack the vessel is on. Pump may be mounted horizontally or vertically, however, the discharge must always be above the inlet. Pump head should be rotated toward the direction of water flow. **Install the seawater speed scoop intake as far below the water line and as close to the keel as possible in any application, but especially on a sailboat, to keep the intake in the water when the boat heels over so that air does not get into the system**. The speed scoop intake must face forward and not be shared with any other pump. A seawater strainer is mandatory between the shut off valve (seacock) and the pump to protect the pump from any foreign matter. Failure to install a seawater strainer will void the pump warranty. The seawater system should be installed with an upward incline from the speed scoop & seacock, through the strainer, to the inlet of the pump, next to the inlet of the air conditioning unit's condenser coil. The discharge from the air conditioning unit should run to the seawater outlet thru-hull fitting that should be located where it can be visually inspected for water flow as close to the waterline to reduce noise. All hose connections should be secured using double/reversed stainless steel hose clamps. Use thread sealer on all threaded connections.

Summary of the seawater system installation:

1. Install the speed scoop thru-hull inlet as close to the keel and as far below the water line as possible, facing forward. Bed the scoop with a marine sealant designed for underwater use.
2. Install a bronze, full flow seacock on the speed scoop thru-hull inlet.
3. Install a seawater strainer below the level of the pump with access to filter.
4. Mount the pump above the strainer and at least 1' (305mm) below the waterline.
5. Connect the seacock and strainer with an uphill run of 5/8" reinforced marine grade hose.
6. Connect the discharge from the pump uphill to the bottom inlet of the air conditioning unit's condenser coil with 5/8" hose. Connect the discharge from the condenser coil to the overboard discharge thru-hull fitting with 5/8" hose.
7. Avoid loops, high spots or the use of 90° elbows with seawater hose (each 90° elbow is equivalent to 2.5' (762mm) of hose and a 90° elbow on the pump outlet is equivalent to 20' (6.1m) of hose).
8. Double clamp all hose connections with stainless steel clamps, reversing the clamps.
9. Use thread sealer on all threaded connections.
10. **Connect all metallic parts in contact with seawater to the vessel's bonding system including the speed scoop inlet, strainer, pump and the air conditioner. Failure to do so will void warranty.**

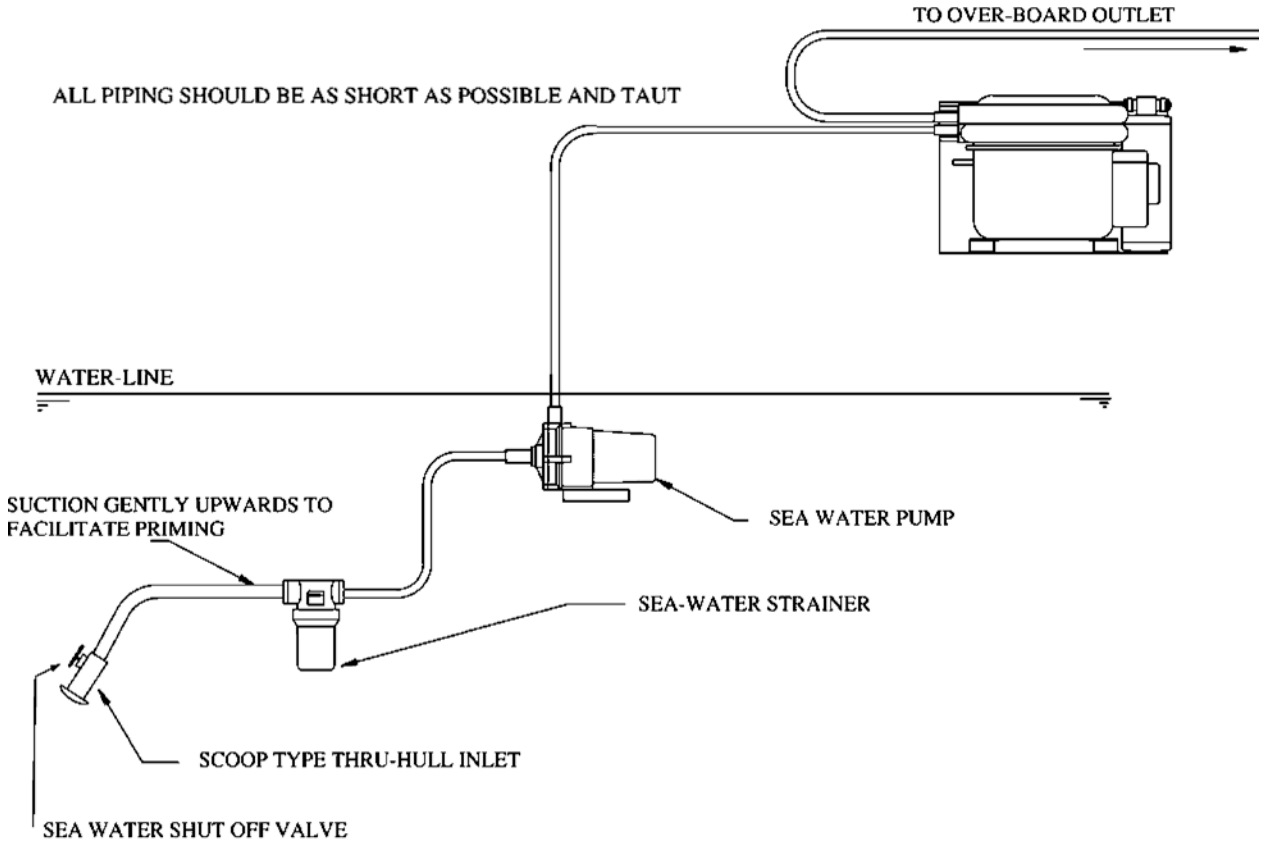

Electrical Connections, Grounding and Bonding

⚠CAUTION Turn off air conditioner power supply circuit breaker before opening electric box.

All air conditioner units have a terminal strip mounted inside the electric box. The terminal strip is labeled for proper connections of the electrical supply, ground wires and pump circuits. A wiring diagram is provided in the electrical box and later in this manual. The wiring diagram in the electrical box supersedes any found in this manual and ABYC standards. The correct size circuit breaker should be used to protect the system as specified within the technical specifications section. A minimum of 12 AWG boat cable should be used to supply power to the air conditioning unit and the seawater pump. All connections should be made with ring or captive fork terminals.

Each air conditioner installed requires its own dedicated circuit breaker. If there is only one air conditioner installed, the seawater pump does not require a circuit breaker; the wiring from the seawater pump is connected to the terminal strip in the electric box. If two or more air conditioners use the same seawater pump, the pump wires will be connected to a pump relay, Please refer to the wiring diagram. Electrical connections in the bilge and/or below the waterline should use heat shrink type butt splices. Field wiring must comply with ABYC electrical codes. Power to the unit must be within the operating voltage range indicated on the data plate. Properly sized marine grade circuit breakers must be installed for circuit protection. All units must be effectively grounded to minimize the hazard of electrical shock and personal injury. Make sure to connect the green grounding wire to the GRND stud within the electrical box per ABYC standard E-8, or equivalent.

1. Connections between the vessel's AC system grounding conductor (green wire) and the vessel’s DC (Direct Current) negative or bonding system should be made as part of the vessel's wiring, per ABYC standard E-9, or equivalent.
    - When servicing or replacing existing equipment that contains a chassis-mounted ground stud, the installer must check the vessel's wiring for the existence of the connection required in item 1 above.

The air conditioner unit must be connected to the ship's bonding system to prevent corrosion due to stray electrical current or voltage. All pumps, metallic valves and fittings in the seawater circuit that are isolated from the air conditioning unit by PVC or rubber hoses must be individually bonded to the vessels bonding system. This will help eliminate any possibility of corrosion due to stray current or voltage.

Digital Display Installation

DO NOT turn the unit off and immediately turn it back on. Wait at least 30 seconds for refrigerant pressures to stabilize.

Before mounting the digital display, consider the location. The digital display should never be mounted in direct sunlight or exposed to excessive moisture.

NOTE: The display cable must be grounded at the electrical box.

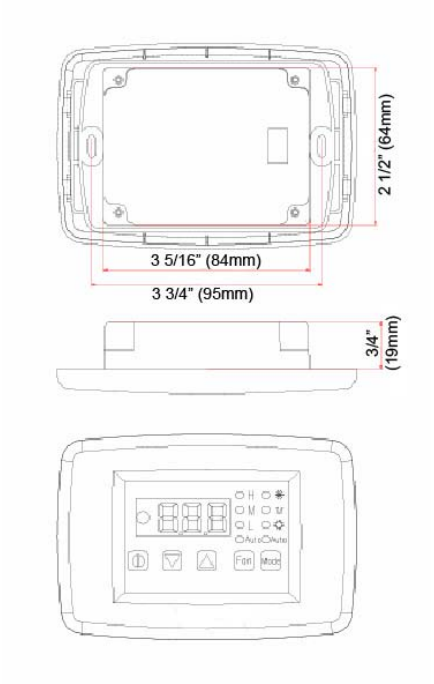

Electric Box Installation

Mount the electric box using four M5 screws.

Mount the electric box in a cool dry location leaving plenty of room for access.

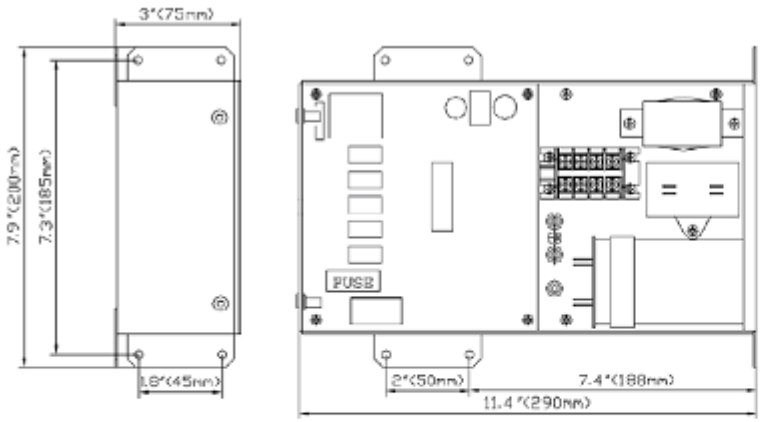

FCF 5,000, 9,000, 12,000, 16,000

FCF 24,000

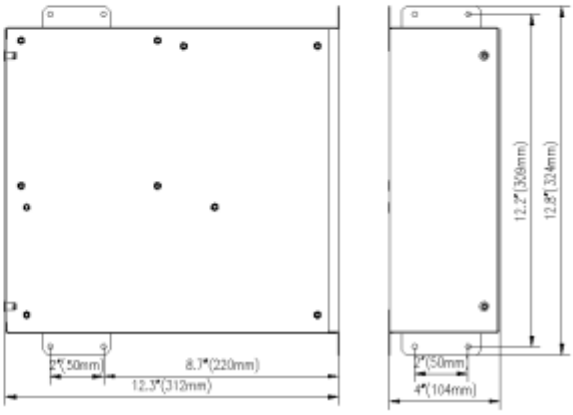

Installation Checklist (Review Prior To Installation)

Seawater cooling system:

- ☐ Speed scoop located as far below the water line and as close to the keel as possible
- ☐ Shut off valve (sea cock) and speed scoop properly sealed and tightened
- ☐ Seawater pump is at least 1' (305mm) below water line and securely mounted
- ☐ Strainer mounted below pump with access to filter
- ☐ Double/reversed stainless steel hose clamps on all hose connections
- ☐ Thread sealer on all threaded connections
- ☐ Hose runs uphill from speed scoop and sea cock to strainer, pump and air conditioning unit, then downhill (if possible) from air conditioner unit to overboard discharge
- ☐ Water flowing freely from overboard discharge while pump is running
- ☐ Pump relay panel, if used, must have its own circuit breaker sized for the pump (20 amp max)
- ☐ All metal fittings should be bonded

Mounting

- ☐ Not in engine room or bilge area, must be sealed away from exhaust or fumes
- ☐ Proper spacing allowed around unit
- ☐ Attached to solid level platform with hold down brackets provided
- ☐ Condensate drain routed aft and down hill to a sealed sump (not bilge)
- ☐ All penetrations to bilge area sealed
- ☐ Blower rotated toward supply air grille

Electrical

- ☐ All butt connections on pumps are tightly crimped and covered with heat shrink
- ☐ AC power source installed and grounded/bonded in accordance with ABYC standards
- ☐ Control wires connected to terminal strip with captive fork or ring terminals
- ☐ Circuit breakers sized according to technical specifications section.
- ☐ Pump Relay Panel (if used) has a dedicated circuit breaker sized for the pump but not to exceed 20 amps maximum.

Grilles and Ducting

- ☐ Supply air grille mounted as high as possible
- ☐ Return air grille mounted as low and as close to the air conditioner as possible
- ☐ Return air grille mounted away from bilge vapors or exhaust fumes
- ☐ Ducting is pulled taut, straight, smooth and properly connected with no excess

Quick Start Operations Checklist

- ☐ Ensure seawater intake ball valve (sea cock) is open.
- ☐ Turn on the air conditioners circuit breaker. If the seawater pump has its own circuit breaker, make sure to turn it on.
- ☐ Turn the system on. Set the desired cabin temperature (set point).
- ☐ Check for a steady solid stream of water from the overboard discharge.
- ☐ Verify that there is steady airflow out of the supply air grille
- ☐ If the unit does not appear to be operating properly, refer to troubleshooting guidelines. Note: Do not turn the unit off and immediately back on. Allow at least 30 seconds for refrigerant pressure equalization.

Wiring Diagrams

Power 115V ~ 60Hz

115V ~ 60Hz Line In	L
115V ~ 60Hz Neutral	N
Cooling Pump Line In	1
Cooling Pump Neutral	2

Power 208V / 230V ~ 60Hz

208V / 230V ~ 60Hz Line In	L
208V / 230V ~ 60Hz Neutral	N
Cooling Pump Line In	1
Cooling Pump Neutral	2

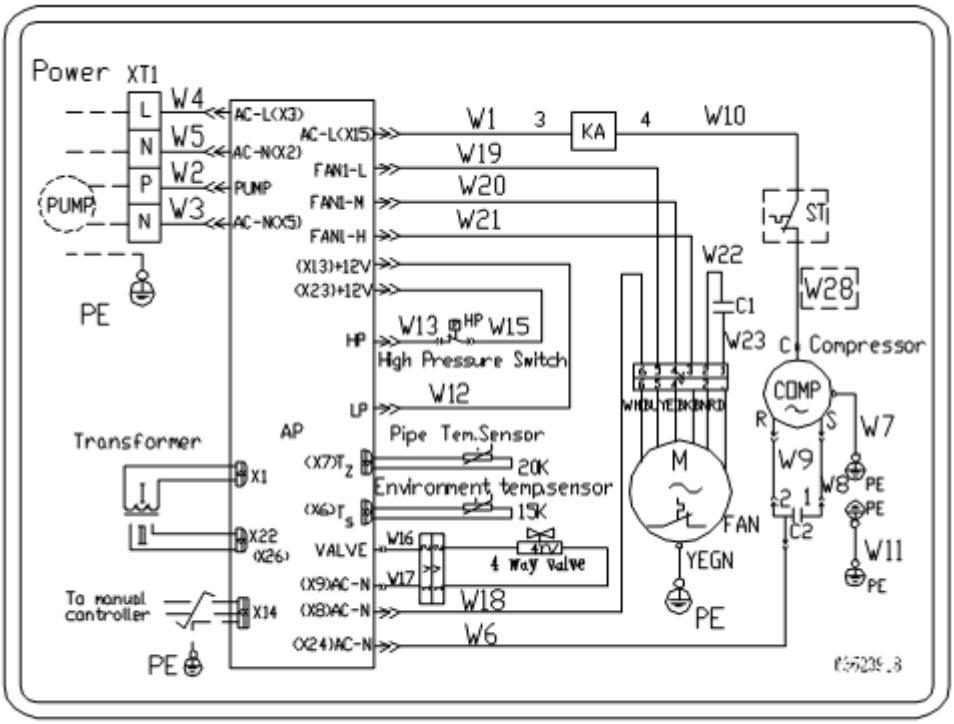

WIRING DIAGRAM FCF 5,000 (115v/230v) FCF 9,000 (115v/230v)

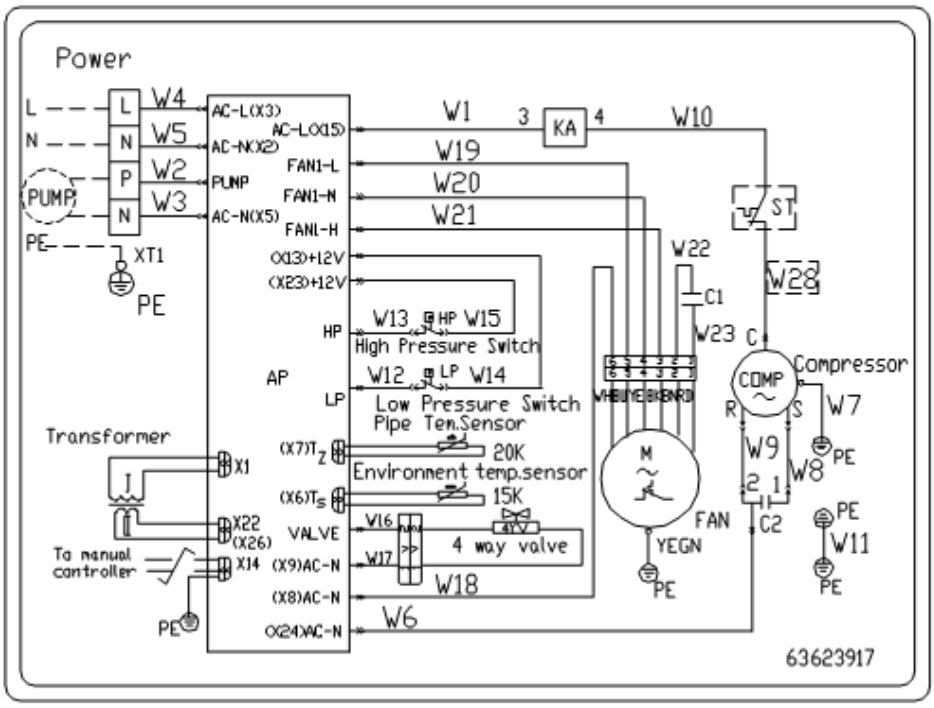

WIRING DIAGRAM FCF 12,000 (115v/230v) FCF 16,000 (115v/230v)

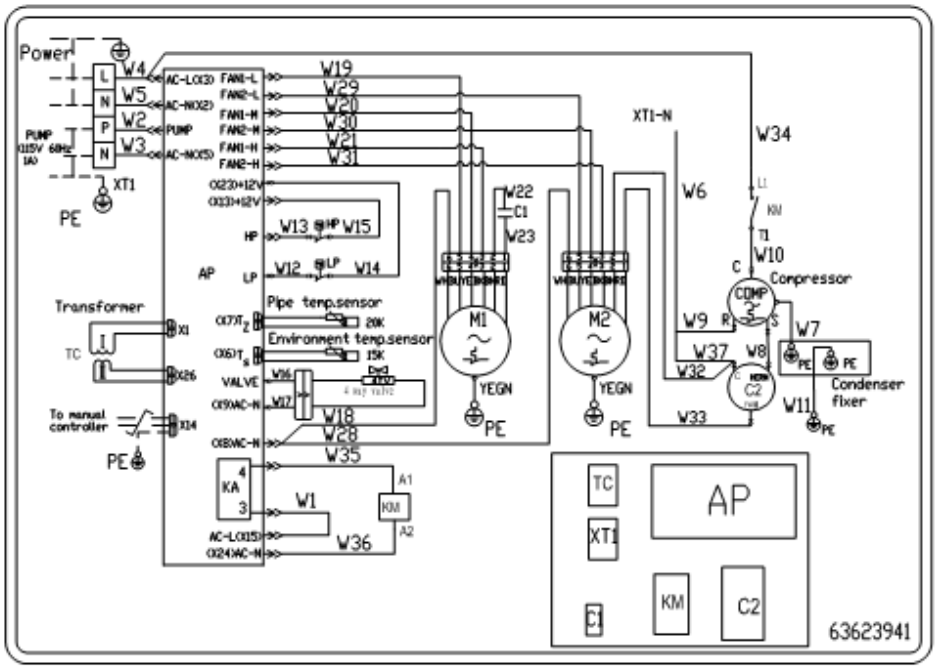

WIRING DIAGRAM FCF24,000 (115V)

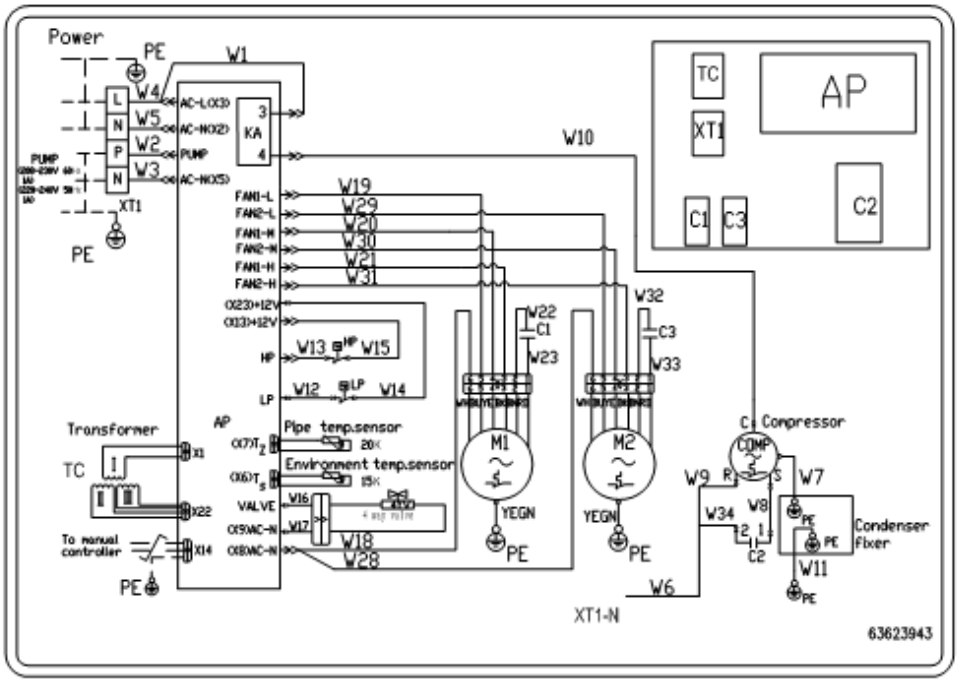

WIRING DIAGRAM FCF24,000 (230V)

Operation

Digital Display Operation

CAUTION

- Don't install the digital display in a location where it can get wet.
- Don’t knock, throw or open the digital display.

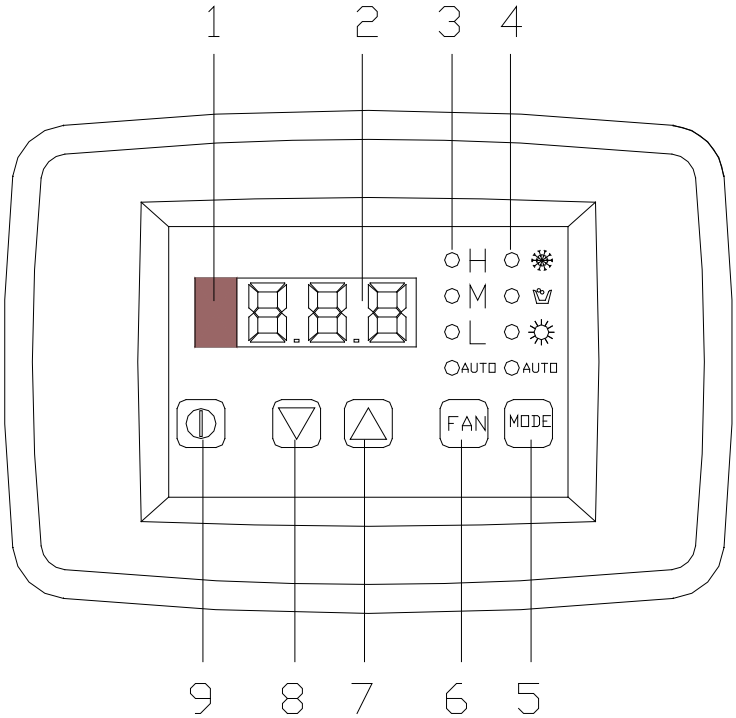

1. Remote receiver	**6.** Fan control button
2. Display	**7.** Temp. Setting button (Increasing)
3. Fan speed display (HIGH-MID-LOW and AUTO speed)	**8.** Temp. Setting button (Decreasing)
4. Display of mode operation (COOL-DEHUMIDIFY-HEAT and AUTO)	**9.** ON/OFF button
5. Mode button	

The digital display has a built in memory function that’s will retain the last modes settings. Settings include operation mode, set temperature, operation fan speed, and the temperature display format.

In cooling / heating / dehumidify mode, the pump starts before the compressor starts, stops after a 5 second delay of the compressor.

Power ON/OFF

- Press ON/OFF button to turn the unit display on. Press the ON/OFF button a second time to select mode and start operation.
- While the display is active press the ON/OFF button once to turn the unit OFF. Press the ON/OFF button a second time if the display has already entered sleep mode to turn the unit OFF.

Sleep Mode of the digital display

The ambient temperature display will automatically enter a sleep status within 5 minutes of inactivity. Press any button on the display or the remote controller to wake the display.

Note: Normal unit operation will continue while in sleep mode, it's only the digital display that turns off.

FAN Control

- Press the FAN button, the fan speed will change in the following order:

→ HIGH →MID → LOW → AUTO →

- In "DEHUMIDIFY" mode, the fan will work at low speed automatically

Temperature Setting

- Press temperature setting key

▲To increase in 1° increments

▼ To decrease in 1° increments

- **The setting range of temperature in each mode:**

COOL	61°F 86°F or 16°C 30°C
DEHUMIDIFY	61°F 86°F or 16°C 30°C
HEAT	61°F 86°F or 16°C 30°C
FAN	In this mode, temperature cannot be changed.
AUTO	In this mode, temperature cannot be changed.

Mode Setting

- Press this key to change the operation mode in order of

→ COOL → DEHUMIDIFY → FAN → HEAT → AUTO →

COOL Mode Operation

- In "COOL" mode, the LED next to the ❄ icon will illuminate when mode is selected on the digital display.
- If room temperature is higher than set temperature, the unit runs in COOL mode.
- If set temperature is higher than room temperature then only the fan will run.

DEHUMIDIFY Mode Operation

- In “DEHUMIDIFY” mode, the LED next to the icon will illuminate when mode is selected on the digital display.
- In DEHUMIDIFY mode, if the indoor temperature is higher than temperature setting, the unit will run in cooling mode and the fan will run on low speed.

FAN Mode Operation Procedure

- In “FAN” mode, the room temperature will be displayed and the temperature cannot be set.
- Temperature cannot be set in this operation mode.

HEAT Mode Operation

- In “HEAT” mode, the LED next to the icon will illuminate when mode is selected on the digital display.
- If room temperature is lower than set temperature, the unit runs in HEAT mode
- If set temperature is lower than room temperature, then only the fan will run

AUTO Mode Operation

- In “AUTO” mode, the LED marked AUTO will appear on the digital display. The temperature cannot be set; the system will run automatically in the appropriate mode according to the difference between room temperature and set temperature.

Display Fahrenheit or Centigrade

- Pressing the ▲ and ▼ key simultaneously, will switch between Fahrenheit and Centigrade modes.

Key Lock

- Press ▼and FAN key simultaneously, all keys are locked. Press ▼and FAN key simultaneously again, to unlock the keys.
- When keys are locked, the controller is locked out of system operation. “EE” will be displayed.

Starting Interval Setting

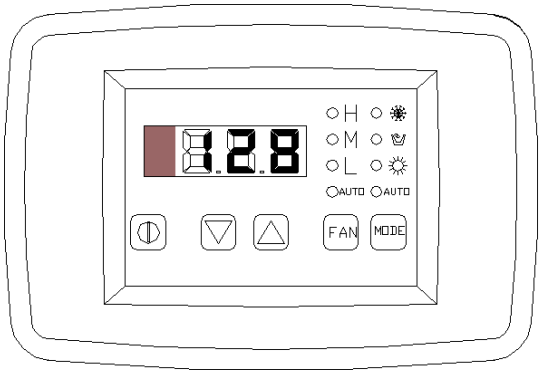

- Make sure to perform these steps from the digital display only. Do NOT use the remote controllers.
- If there are several air conditioning units in a yacht, you can set starting time interval between one by one.
- When the digital display power on, and there isn't any operation, to press the button and fan speed b utton simultaneously, the starting interval can be set, the display will flash a number in every 0.5s, then pressing▼ and ▲ buttons to set up, after the setting, to press thebutton and fan speed button simultaneously, to confirm the set up value; if not to press▲ button and fan button again simultaneously, the figure will flash 10s,and then the controller will quit from starting interval setting, the setting number is not available.
- The value being shown by the display is the interval time, each interval time is 20s, for example the set up value is 128, it means that the actual setting interval time should be 128×20=2560s.
- When the value is shown on the display, press the ▲button and the fan speed button simultaneously. The value will appear for an interval time for 5s.
- The new setting starting interval time would be executed after digital display re-powered on.
- The setting range of starting interval value is 0-255; accordingly, the setting range of starting interval time is 0-5100s (85min).

Remote Controller Operation

Make sure there is no blockage between the remote controller and signal receiver.

- The remote controller signal can be received up to a distance of 33' (10m).
- Don't drop or throw the remote controller.
- Don't place the remote controller in a location exposed to direct sunlight or high temperature.

This remote controller is universal. Some functions / buttons and display options may not apply to this AC unit.

Button / Function and Description (Cover Closed)

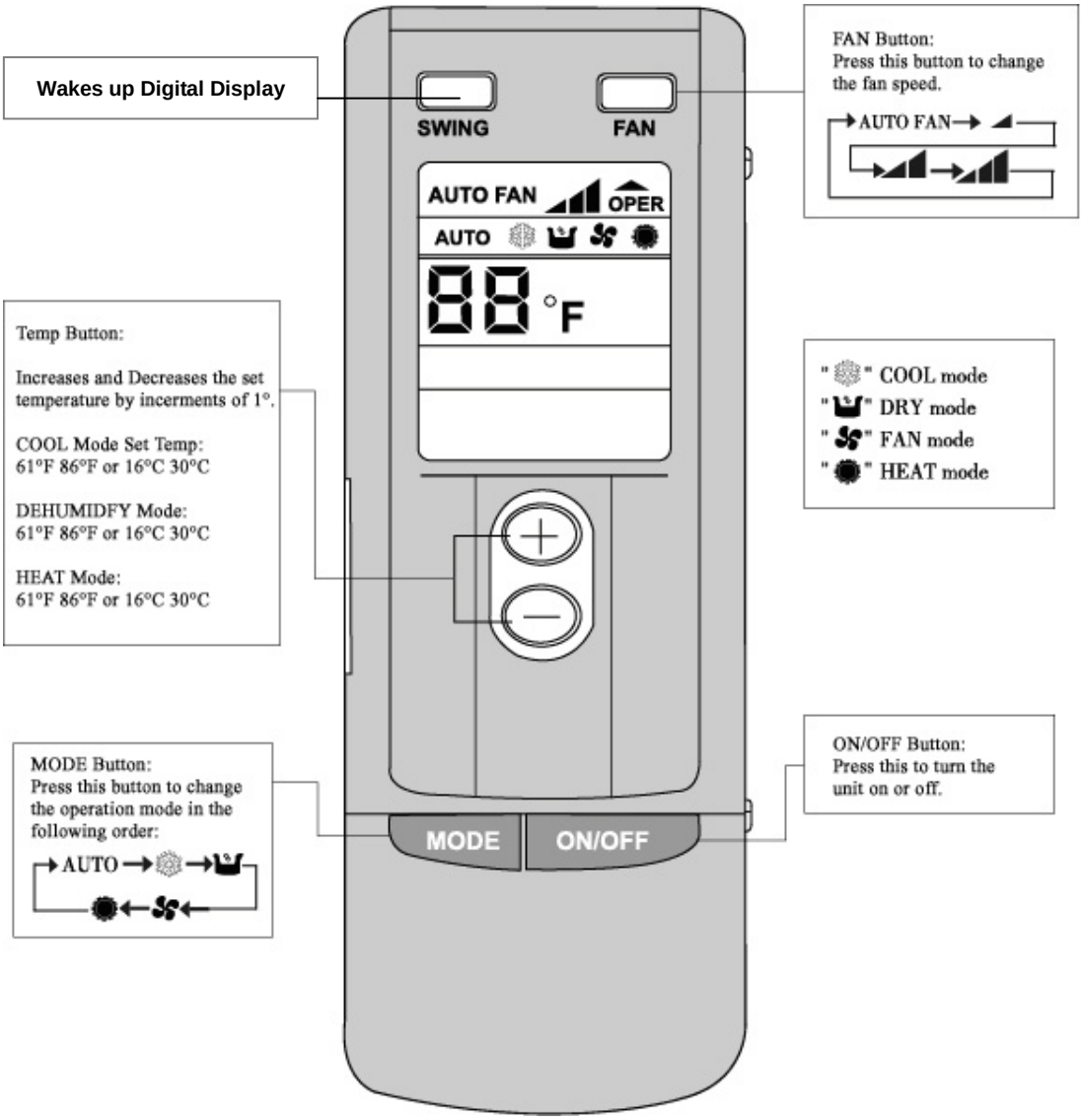

Button / Function and Description (Cover Open)

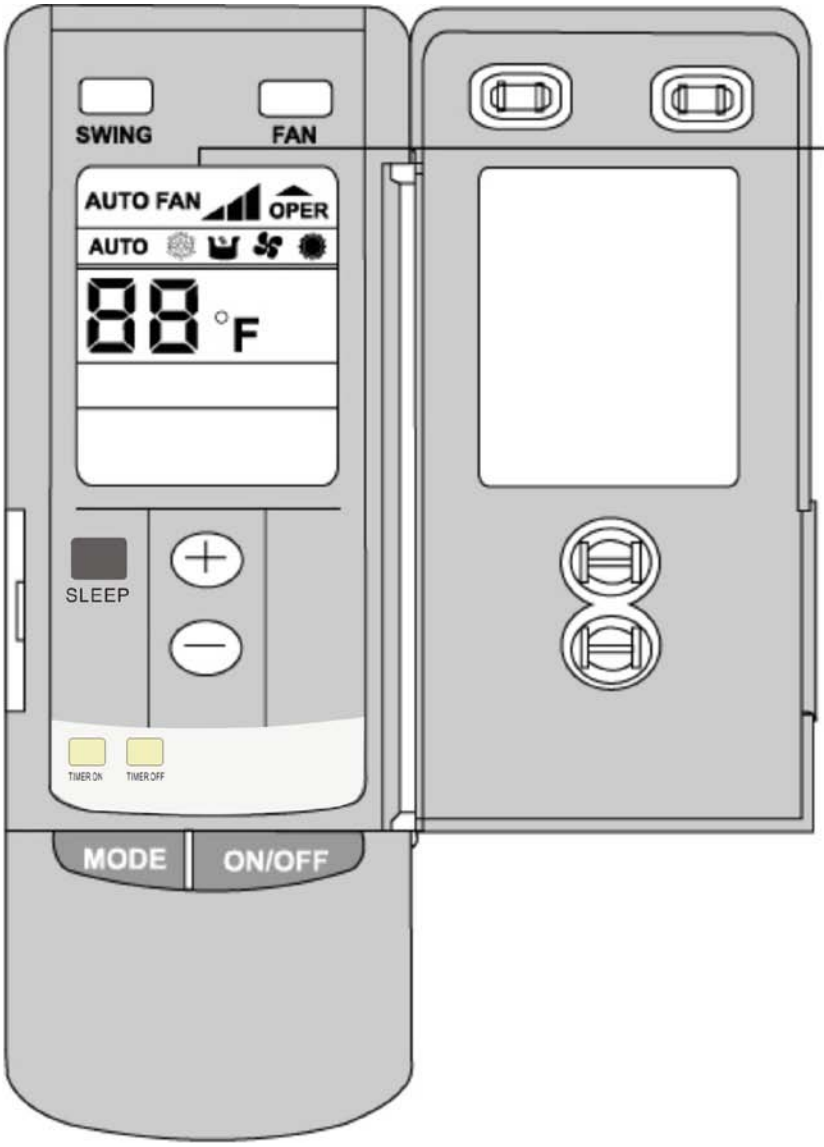

Liquid Crystal Display. Opening cover while unit is on will not affect unit operation.

NOTE: This is a universal remote; the sleep and timer ON/OFF buttons are not used with this application.

Battery Replacement in Remote Controller

Remote controller battery requirements: Two AAA alkaline cells.

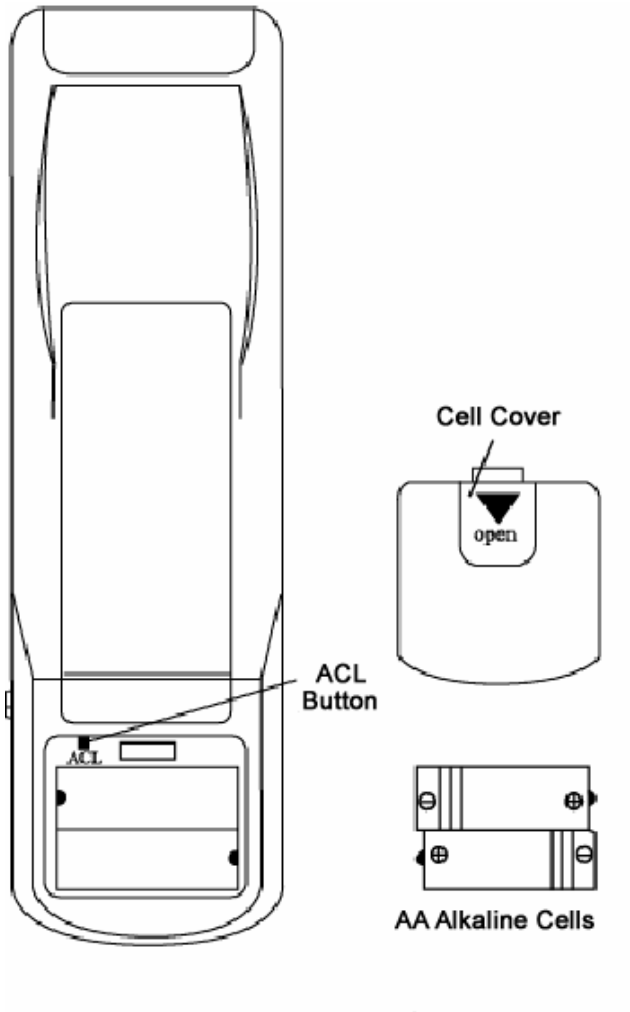

1. Slide the cell cover downward to take out the worn cells. Replace the worn cells. (Note to the correct polarity).
2. Close the cell cover.
3. The LCD will show all the functional figures and letter codes after the batteries are installed. Wait approximately 10 seconds for normal use.
4. The life span of batteries is approximately 1 year. (Depending on usage)
5. If the remote controller doesn't work after the batteries have been replaced, remove the back cover and press the "ACL" button to reset the controller.

Error Codes

When there are faults within the system, an error code will be displayed on the display controller: Power off the unit and contact professional service.

Error code	Description
E1	Compressor high pressure protection
E2	Evaporator freezing protection
E3	Compressor low pressure protection
E6	Communication error
F0	Ambient temperature sensor error
F1	Evaporator temperature sensor error

Troubleshooting

FAULT	POSSIBLE REASON	CORRECTION
Will not start	Air conditioning circuit breaker is off	Turn circuit breaker on at ship's panel, See control operation section in this manual.
	Display control is not turned on.	Check wiring Diagram and correct if necessary.
	Fuse is broken	Replaced with a new fuse.
	Incorrect wiring at terminal strip.	Disconnect power supply and open electric box, check wiring diagram, correct if necessary,
	Push-on butt connectors pulled apart during installation.	Check power source (shore/generator) for proper voltage.
	Input line voltage is insufficient,	Check wiring and terminals for proper sizes and connections.
Fan not running.	Check your specific control Troubleshooting section	
No cooling or heating	Temperature set point is above (in cooling) or below (in heating) ambient temperature	Lower or raise set point.
	Obstructed seawater flow.	Clean seawater strainer. Check for obstructions at speed scoop thru-hull inlet. Check for a good steady flow from the overboard discharge.
	Seawater pump maybe air-locked,	Remove hose from pump discharge to purge air from line
	Refrigerant gas leaked.	Check air conditioning unit for refrigerant oil leakage, call service technician.
	Seawater temperature too high for cooling or too low for heating.	Seawater temperature will directly affect the air conditioning unit's efficiency. This air conditioning unit can effectively cool your boat in water temperature up to 90^0F and heat (if reverse cycle option is installed) in water as low as 40^oF.
	Coil is iced (in cooling)	See below
	Fan is not running.	See below
	Pressure switch or thermal overload opened.	Check your specific control troubleshooting section.
No Heating	Reversing valve may be stuck.	Tap reversing valve lightly with rubber mallet while unit is in heat mode, call for service if the problem cannot be solved.

Continued:

FAULT	POSSIBLE REASON	CORRECTION
Low air flow	Air flow is blocked	Remove any obstructions in return air stream, Clean return air filter and grille. Check for crushed or restricted ducting, ducting must be as straight, smooth and taut as possible.
	Coil is iced	See below.
Coil is iced	Thermostat set point is too low	Raise set point.
	Improper air flow	Remove any obstructions in return air stream. Clean return air filter and grille. Check for crushed or restricted ducting, ducting must be as straight, smooth and taut as possible.
	Supply air is short-cycling,	Redirect supply air so that is not blowing into the return air stream. Seal any air leaks on duct.
	Seawater temperature is below 40°F	Shut down system to prevent damage to condenser. Allow coil to defrost (see below).
	Humidity level too high.	Close hatches and doors.
	When all else fails.	Switch air conditioner to heat until ice melts or use hair dryer to melt.
	Check your specific control troubleshooting section,	
System runs continuously.	Set point temperature is improperly set: too low for cooling or too high for heating.	Raise or lower set point.
	Porthole or hatches open.	Close all port holes and hatches,
	Seawater temperature too high for cooling or too low for heating.	Seawater temperature will directly affect the air conditioning unit's efficiency. This air conditioning unit can effectively cool your boat in water temperatures up to 90°F and heat (if reverse cycle option is installed) in water as low as 40^{0}F.
	Improper air sensor location.	Check your specific control troubleshooting section,
Digital display is not lit.	4-pin display cable plugs are not making contact (unplugged, dirty, bent, or broken pins).	With POWER OFF at the circuit breaker, remove connector and inspect. If damaged, replace connector or entire display cable.

Maintenance

Reversing Valves

Reverse cycle units have a reversing valve; the valve must be energized periodically to keep the internal parts moving freely. To do this, switch the air conditioning unit into heat mode 2-3 cycles per month.

Seawater Strainer

Ensure that your pump receives adequate seawater flow by regularly cleaning the strainer basket. Periodically check the overboard discharge for a steady stream of water. Check seawater intake speed scoop for obstructions. Make sure hoses are not looped, kinked or crushed. Check and clean strainer as needed minimum once per month.

Condenser Coil Cleaning (Seawater Acid Flush)

1. With the system turned off at the circuit breaker on the ship's panel, disconnect the inlet and outlet connections of the condenser coil.
2. Use chemical resistant hoses (PVC 5/8" I.D., etc.) to connect the inlet of the condenser coil to the outlet of a chemical resistant, submersible pump and let the hose connected to the Coil outlet flow freely into the container mentioned below.
3. Place a strainer or piece of screen over the inlet of the pump and submerse the pump into a container filled with a 5% solution of muriatic or hydrochloric acid and fresh water or use a premixed over-the-counter solution. Use a large container as possible to hold the solution (5-25 gallons). CAUTION: avoid spilling or splashing the solution. Remember to wear all necessary protective gear, i.e. approved safety goggles and chemical resistant gloves. Follow all warnings and recommendations given by the manufacturer of any acids or premixed solutions.
4. Power the pump and circulate the solution through the condenser coil for 15-45 minutes depending upon the size of the coils and the extent of the contamination. Visual inspection of the solution in the container should indicate when the contamination has been removed.
5. Circulate fresh water through the coil to flush any residual acid from the system.
6. Restart the system and check operational parameters to ensure thorough cleaning has taken place. Additional cleaning may be necessary with extreme contamination.
7. Minimum once per year or as needed.

⚠WARNING For the purpose of protecting the environment, dispose of any contaminated acid solutions in accordance with federal, state and/or local regulations.

Return Air Filters

Check the return air filter about once a month and clean as necessary. To clean the filter, remove it from the unit, rinse with water, air dry and reinstall. (Do not used compressed air)

Winterization

There are several methods of winterization, some of which work better than others. There are various methods employed using a 50/50 non-polluting biodegradable anti-freeze/water solution. Any method that causes the anti-freeze solution to flow downward is the method of choice. By this, the anti-freeze solution will displace any water trapped and eliminate the possibility of freezing in hidden areas. In addition, since the seawater pump utilizes a magnetically driven impeller, the impeller should be removed from the wet end assembly, Wiped with a solution, and stored in a warm, dry area until commissioning takes place.

Collect all discharged liquids and recycle or dispose of in a proper manner.

Unit Dimensions & Technical Specifications

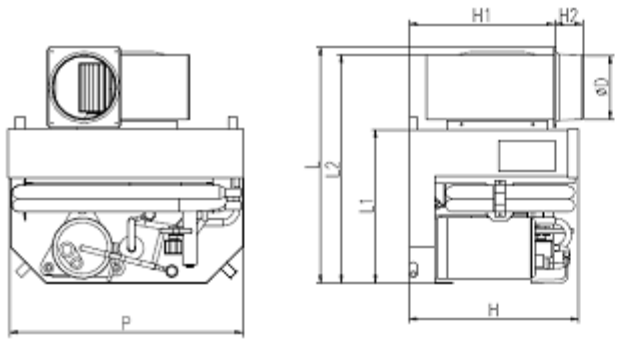

FCF 5,000, 9,000, 12,000, 16,000

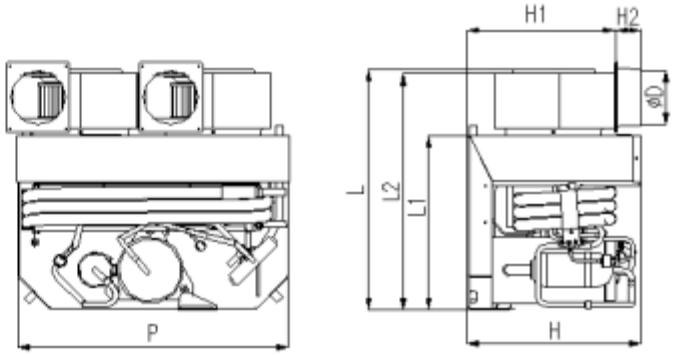

FCF 24,000

Unit Dimensions & Technical Specifications										
BTU Capacity	5000		9000		12000		16000		24000	
Capacity in kW	1.5		2.6		3.5		4.6		7.5	
Voltage	115V	230V	115V	230V	115V	230V	115V	230V	115V	230V
Frequency	60Hz	50Hz/60Hz	60Hz	50Hz/60Hz	60Hz	50Hz/60Hz	60Hz	50Hz/60Hz	60Hz	50Hz/60Hz
Aver. Load Amps	4.8A	2.2A	7.2A	3.6A	10A	4.6A	11.2A	5.8A	17.5A	9.3A
Starting surge	21A	16A	7.2A	20A	47A	29A	60A	38A	97A	52A
Refrigerant	R410A		R410A		R410A		R410A		R410A	
Net Weight	24kg		27kg		33kg		34kg		56kg	60kg
Shipping weight	28kg		32kg		38kg		39.5kg		64kg	68kg
Blower Output	350 m^3/h	300m^3/h	450m^3/h		550m^3/h		750m^3/h		1100 m^3/h	
Dia. Cupro	16mm		16mm		16mm		16mm		16mm	
H (mm)	295		310		330		330		382	
H1 (mm)	260		260		290		290		326	
H2 (mm)	54		54		54		54		56	
P (mm)	285		380		380		450		595	
D (mm)	100		100		125		125		127	
L (mm)	408		408		438		454		529	
L1 (mm)	280		280		280		295		382	
L2 (mm)	380		395		410		440		519	
Suggest Breaker	6A	6A	10A	6A	16A	10A	20A	10A	32A	16A

This data is subject to change without notice; please refer to the data on the nameplate.

Limited Warranty

This product comes with a 24 month limited warranty from the date of purchase. To obtain warranty service, contact a customer service representative at: (800) 860-7866 or e-mail at: info-us@webasto.com.

Technical Assistance

If you require help, check our technical assistance website at http://www.techwebasto.com or call the technical support hotline at (800) 860-7866.

For quick service, please have the following information available:

- Full Name
- Phone number including the area code
- Unit Model Information and serial number
- The type of assistance you are requesting
- Document any error codes

NOTES

Webasto Product N.A., Inc.
Technical Assistance Hotline
Phone: (800) 860-7866
Outside U.S. (810) 593-6000
www.webasto.us
www.techwebasto.com

Original 7/2006 | Rev. C | Date: 4/2011