Corrosion measurement

DPH/DPR & IPS

DRAFT

VOLVO PENTA

Corrosion measurement
DPH/DPR and IPS

Contents

Introduction 2

Corrosion theory 2

Corrosion protection 8

Preventive measures 10

Required measurement equipment 11

Basic information 12

DPH/DPR

Description of drive 14

Possible corrosion causes 15

Methods of measurement 21

Measurement report 25

Actions 26

IPS

Description of drive 31

Possible corrosion causes 31

Methods of measurement 35

Measurement report 37

Actions 37

APPENDICES

Stray current corrosion 39

Alternating current corrosion 40

Voltage gradients 41

Quick guide DPH/DPR 43

Quick guide IPS 45

Basic data report 46

Measurement report DPH/DPR 48

Measurement report IPS 49

Introduction

This manual describes the corrosion damages which can occur on the DPH/DPR and IPS drives and offers advice on finding the cause of the damage. The goal is to use measurement to find installation or operation faults or the influence of external causes. Damaged caused by any material defects requires more detailed analysis and is not considered here

Corrosion theory

Corrosion in water is always electrochemical in nature. This means that a weak electric current occurs at the same time as chemical reactions takes place. Two chemical reactions are required to make a metal corrode, an oxidation reaction (metal dissolving) and a reduction reaction (generally oxygen consuming). Oxidation is referred to as an anode reaction and reduction is referred to as a cathodic reaction. In an oxidation reaction, electrons are freed which are transported in the metal to another point, where they are consumed in a cathodic reaction.

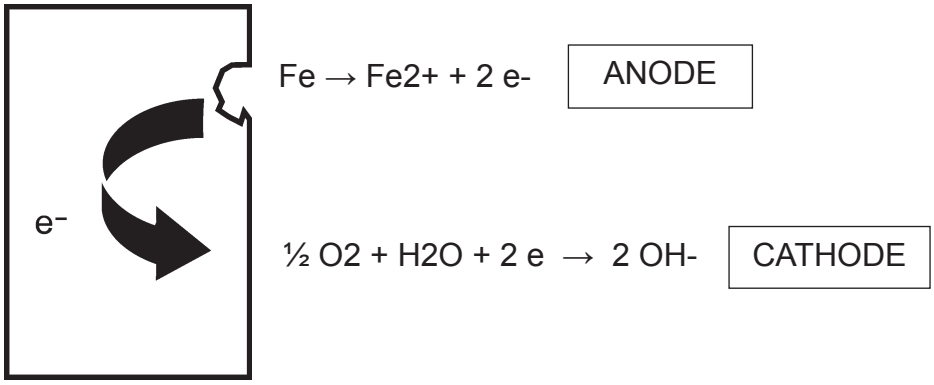

Electrons are thus transported in the metal from the anode to the cathode. This causes a weak DC current in the opposite direction. An electric circuit must be closed. This is achieved by the transport of ions in the water.

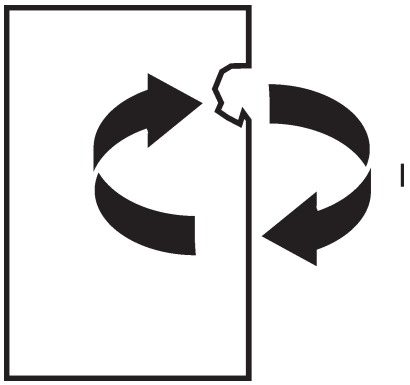

Anodic and cathodic reactions must always balance each other, which means that the electrons released at the anode must be consumed at the cathode. If the anodic and cathodic reactions occur evenly distributed across the entire surface, *general* corrosion occurs. The depth of attack then becomes basically equal across the entire surface. This commonly occurs on steel and bronze.

If the anodic and cathodic reactions occur at different points, local corrosion occurs, i.e. deeper attack at certain points. The attacks on materials which can be passivated, such as stainless steel and aluminum are generally localized. There are different types of local corrosion. The most common types of attack on stainless steels and aluminum are *pitting corrosion* and *crevice corrosion*.

In addition to these local attacks, attack can be caused by *galvanic* corrosion or *stray currents*. In areas where rapid water flow occurs, damage cause by *cavitation* can also occur.

If we ignore attacks related to material defects, the following types of corrosion can occur:

- General corrosion.
- Pitting.
- Crevice corrosion.
- Galvanic corrosion.
- Stray current corrosion.
- Cavitation.

A brief description of each type of corrosion is given below.

General corrosion

General corrosion is the most common type of corrosion. This results in even attack across all or large parts of the surface.

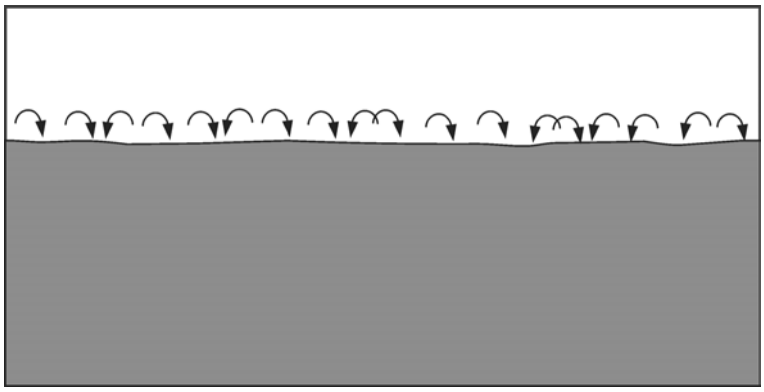

In seawater, mild steel and bronze are subject to general corrosion, but not stainless steel. In stationary seawater, the corrosion rate of mild steel is about 0.1 mm/year (0.3 mm/year at the waterline) unless the steel is protected by cathodic protection. Bronze is initially attacked at a rate of 0.05 mm/year, but after some time the corrosion rate falls to a low level, since the corrosion products (black, brown) have a protective effect. Green/blue corrosion products are a sign of higher corrosion rates and that the protective layer has not been developed.

Aluminum can be subject to a certain amount of general corrosion in rapidly flowing water, but not in stationary water.

Pitting corrosion

Pitting corrosion can occur on stainless steel and aluminum. The attack is caused by localized breakdown of the passive oxide film on the metal surface. In natural water, it is generally chloride ions that initiate the attack. The risk increases with rising water temperatures. There is

a number of aluminum alloys with very good resistance to corrosion by seawater. If these are connected together with more noble metals, they will be attacked due to galvanic corrosion, however.

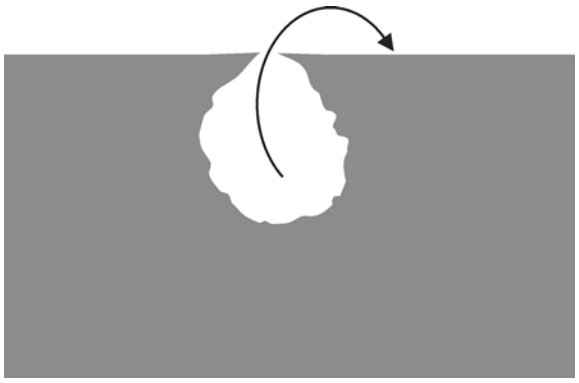

Very high levels of chromium and molybdenum are required, above all, to make stainless steel fully resistant to the risk of pitting corrosion. If there is weak cathodic protection (sacrificial anodes), excellent protection against pitting corrosion can be obtained on simpler steels. Alloys of lower grades than 316 should be avoided, however.

Crevice corrosion

An attack in the gap between two metal surfaces, or between one metal surface and another materials is called crevice corrosion. A so-called oxygen depletion cell is formed when oxygen transport into the crevice is lower than oxygen transport out to the cell opening. Separate anodic and cathodic surfaces are formed.

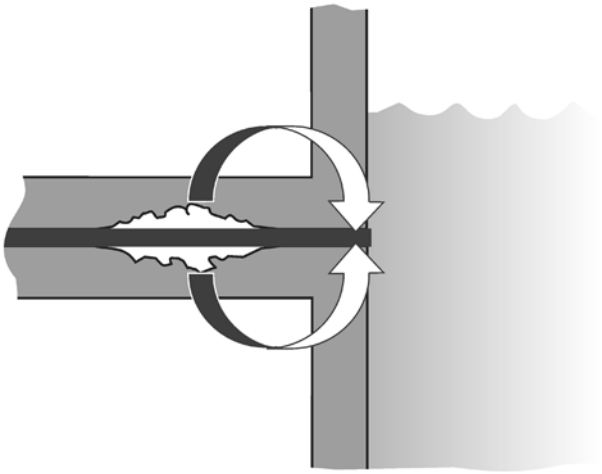

The cathodic process, which requires access to oxygen, is formed in the gap opening and the anodic process, metal dissolving, takes place inside the gap. Crevice corrosion can occur on most metals, but the risk is greatest on metals that can be passivated, such as aluminum and stainless steel.

Deposit corrosion is closely related to crevice corrosion. It takes place under deposits and marine fouling such as barnacles.

Galvanic corrosion

Galvanic corrosion is probably the most common type of corrosion. It occurs when two metals of different nobility are in electric contact and are submerged in the same body of water at the same time. The least noble metal is corroded.

Information about the nobility of different metals is obtained from galvanic potential tables which have been prepared in various fluids, such as seawater. See below:

Material	**Potential, V**	
Graphite	+0.19 to +0.25	Most noble
Stainless 18/8/3 (passive)	0.0 to -0.10	
Stainless 18/8 (passive)	-0.05 to -0.10	
Stainless duplex	-0.10 to -0.20	
Nickel	-0.10 to -0.20	
Nickel aluminum bronze	-0.17 to -0.23	
Lead	-0.19 to -0.25	
Silicon bronze	-0.26 to -0.29	
Manganese bronze	-0.27 to -0.34	
Aluminum brass	-0.28 to -0.36	
Copper	-0.30 to -0.57	
Tin	-0.31 to -0.33	
Brass	-0.30 to -0.40	
Aluminum bronze	-0.31 to -0.42	
Stainless 18/8/3 (active)	-0.43 to -0.54	
Stainless 18/8 (active)	-0.46 to -0.58	
Mild steel, cast iron	-0.60 to -0.71	
Aluminum alloys	-0.76 to -1.00	
Galvanized steel	-0.98 to -1.03	
Zink	-0.98 to -1.03	
Magnesium alloys	-1.60 to -1.63	Least noble

There are four factors which influence the seriousness of galvanic corrosion in each individual case. These are:

- Area relationship between the anode (less noble metal) and the cathode (more noble metal). If the anode is small in relation to the cathode, the depth of attack will be greater than if the situation was reversed.
- Conductivity of the water. Seawater conducts electricity better than fresh water, and corrosion takes place at a greater rate.
- Potential difference between the two metals. A large potential difference increases the power behind the process.
- Lower corrosion rate can be obtained if the more noble metal can be passivated. This means that stainless steel is more noble than copper, but the galvanic corrosion will be more severe on aluminum when connected to copper than when connected to stainless steel.

In seawater, total galvanic corrosion counted in grammes of metal, will be greater than in water which is not so salt. The greatest depth of corrosion on a metal can be equally large in brackish or fresh water. The better conductivity of seawater means that the attack will be distributed evenly across the entire surface. In fresh water, there will be more local attack close to the point of contact.

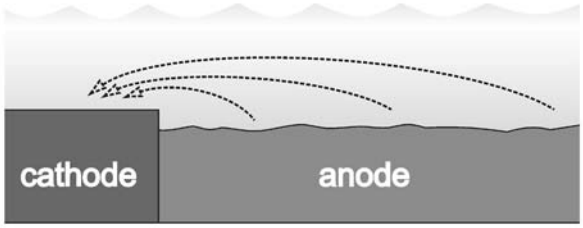

Seawater

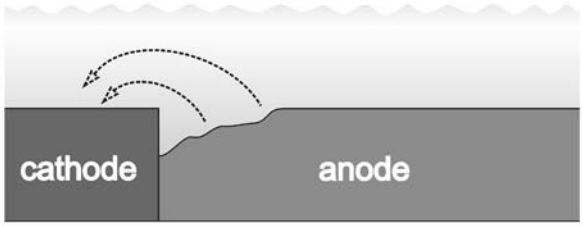

Fresh water

The following should be considered, to counteract galvanic corrosion:

- Do not connect metals which are far away from each other in the galvanic potential table.
- Insulate different metals from each other by using plastic or rubber (must not contain graphite).
- Paint the structure. The surface of both metals should be painted. If painting is restricted to only the less noble metal, heavy galvanic corrosion could occur on surfaces where there is paint damage. The reason for this is that the cathode/anode relationship will be unfavorable.
- Install cathodic protection.

Stray current corrosion

As we learned in the corrosion theory chapter, corrosion occurs when a DC current flows into the water from a metal surface. Similar stray currents from the drive can occur if there is a fault in the boat's electrical system, such as if couplings are exposed to dirt and moisture, components are incorrectly installed or damaged. Stray currents can come from shore current installations or adjacent boats. All metals, except a few noble metals, are corroded by stray currents. Corrosion rates can be very high.

The sacrificial anodes on the drive are not dimensioned to counteract any stray currents. If stray currents occur, the anodes will be consumed very quickly and the drive will be attacked.

Aluminum is particularly vulnerable to stray currents. If the current density on the surface is high, corrosion can also occur when there is a stray inwards current. AC currents can also cause damage. The AC corrosion rate for aluminum is 30% of the rate for DC. The corresponding rates for steel, copper and zinc are much lower, at 1%. Please refer to the figure.

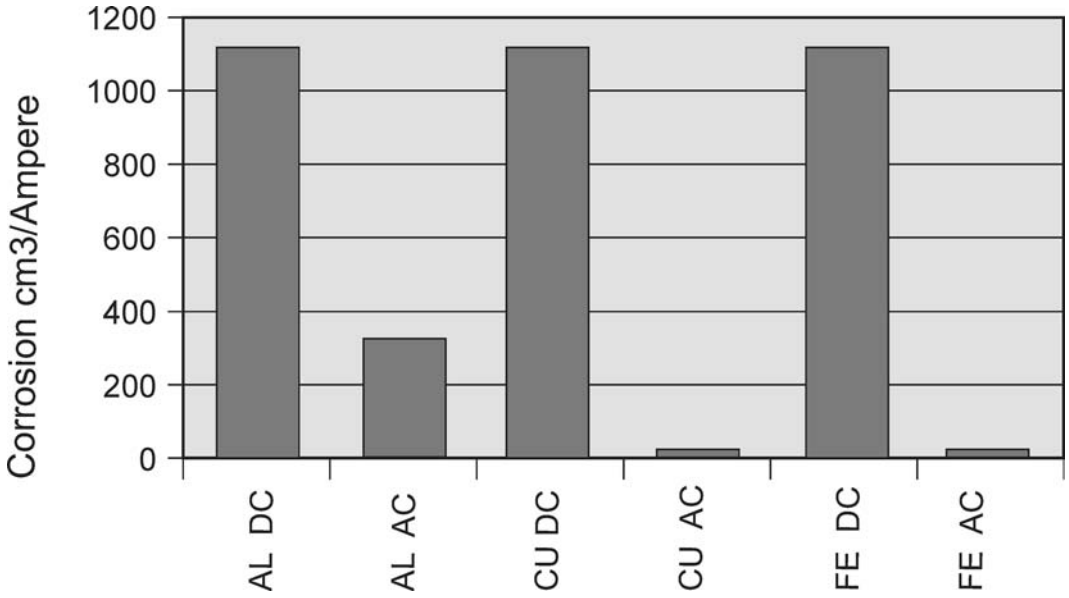

Cavitation

Corrosion can occur in the water flow round the propeller due to cavitation. This can be distinguished from corrosion damage since the attacks extend in a line in the direction of flow.

Corrosion protection

Drives are protected from corrosion by a number of measures.

- Alloys which are resistant to salt water.
- Avoidance of unsuitable combinations of metals. Where appropriate, a favorable relationship between anode and cathode is established
- High quality surface treatment.
- Cathodic protection.
- Carefully designed electrical system.
- Recommendations to minimize external interference.

Recommendations from Volvo Penta and paint manufacturers must be followed. In addition, the paint must be resistant to the alkali that is formed on cathodically protected surfaces.

Cathodic protection is arranged by supplying a weak DC current from an anode to the protected object. The current which leaks in counteracts the corrosion current. The higher the protection current, the lower is the rate of corrosion.

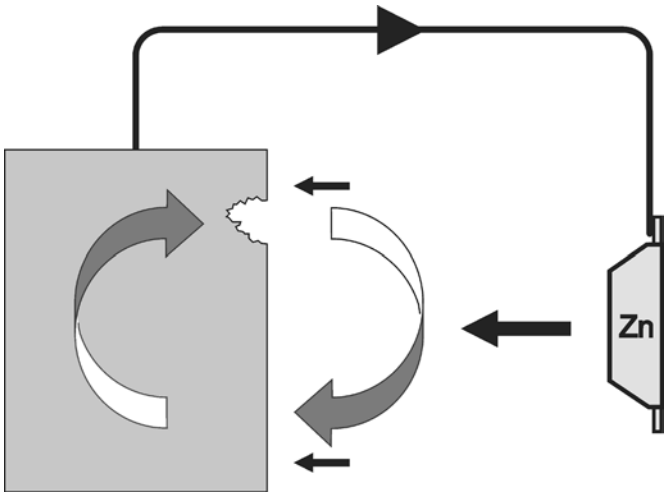

The current required for protection can be generated in two ways. These are either with sacrificial anodes or by applying a current. If sacrificial anodes are used, the current is generated by connecting the protected object with a less noble metal (anode). The difference in electric potential creates a protective galvanic current. It can be said that corrosion is transferred to the anode, which is why they are referred to as sacrificial anodes.

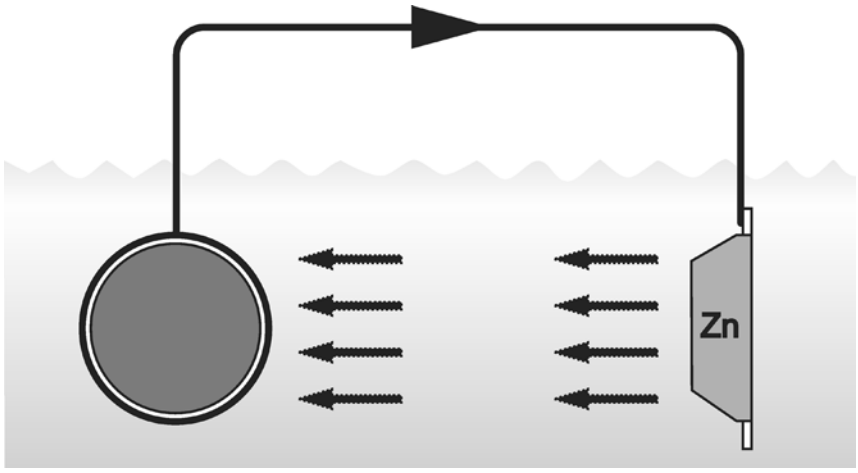

If a current is applied, this is supplied from an external source (rectifier, battery).

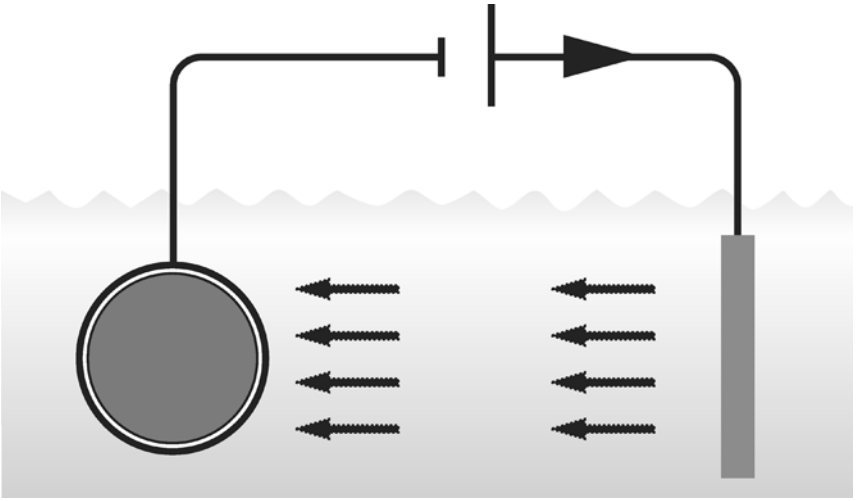

The materials used in sacrificial anodes are zinc, aluminum, magnesium and iron. Please note that special alloys are used, to meet the following requirements:

- No passivation, i.e. they do not stop supplying current.
- Even consumption
- Low polarization tendency, i.e. they retain a sufficient potential difference to the object
- Low self-corrosion.

Only use original anodes. Never paint over the anodes.

Iron anodes can be used to protect stainless steel and bronze objects. Magnesium anodes can be used in fresh water where the current supplied by zinc anodes may not be enough in some cases. Please note that magnesium anodes give overprotection to aluminum in seawater. Zinc anodes can be used in all waters. Aluminum anodes are technically equal to zinc anodes but can only be used in seawater. There is no risk of overprotection of aluminium if zinc or aluminum anodes are used for protection.

Preventive measures

The risk of corrosion damage can be reduced by correct installation of equipment. A few tips are given below.

- All DC components must have 2-pole installation, i.e. they must have an insulated earth return cable.
- Cable joints and junction boxes must be installed so that they are not exposed to damp or bilge water.
- Cables which are subject to wear must be installed in self-draining protective tubing.
- Main switches should be installed for the starting battery, one on the positive side and one on the negative side. If only one switch is installed, it should be on the positive side.
- The main switch should disconnect all equipment connected to the starting battery.
- The engine block and propeller shaft must not be used as ground planes for the radio, navigation equipment or other equipment where a separate earth (ground) cable is used.
- All separate earth (ground) cables (earth connections for radio, navigation equipment, depth sounder etc.) must be connected to one common earthing point, i.e. to a cable which does not serve as a return cable for current..
- The protective earth (ground) for shore current must not be connected to the engine block or other earthing point in the boat. The protective earth current must always be connected to the housing of the junction box.
- Transformers connected to shore current, such as battery chargers, must have the protective earth (ground) on the 230 (110) V side connected, but the negative terminal on the 12/24 V side must not be connected.
- Check that cable terminals are clean and tightened. Clean all terminals regularly. Grease all connectors and spade terminals with Vaseline. Keep batteries, battery boxes and battery cables clean.
- Check for wear on cable insulation. Change damaged cables
- Check switches, no current must flow when they are switched off.
- Only install original anodes.
- Never paint the surface of anodes.
- Before launching, any corrosion products on zinc anodes must be removed with emery cloth (never use a wire brush with steel bristles)
- Change anodes if more than 50 % has been used up.
- Touch up the paint on drives and shields (DPH/DPR)
- Do not use paint that contains metal oxides (DPH/DPR).
- Boat hulls that contain carbon fiber are electrically conductive. Make sure that all components exposed to water have cathode protection that complies with the requirements for protecting aluminum (DPH/DPR) or bronze (IPS).

Measurement equipment required

The following equipment is required for making measurements:

- Multimeter (Volvo part number 9812519), measure range. 0-2000 mV, resolution 200-2000 mV +-0,5%.
- Clamp on Ammeter, measure range: 0-40 A DC/AC, auto range 4A/40A, resolution 1 mA(4A) – 10 mA(40A).
- Conductivity meter, 0-500 mS/cm, salinity and temperature, automatic temperature compensation.
- 2 calomel reference electrodes (Volvo part number 885156-0). Fit banana connector to use with multimeter.
- Zinc anode (Volvo part number 3588745). With fitted measurement cable and banana connector.
- 2 measurement cables, length 1,5 m. 1,5 mm^2.
- 2 measurement cables, length 10 m. 1,5 mm^2.
- 2 alligator clamps, small.
- 2 alligator clamps, medium.
- 9V battery.
- Emery cloth.
- Litmus paper.
- Measurement report.

Basic information

Before measurement starts, various observations should be made and noted for subsequent evaluation.

Date: .....
Person in charge: ..... Name of the boat.....
Boat owner: ..... Hull no .....
Harbor:..... Country:.....

Water □ seawater □ brackish □ fresh water
Salinity:……. pH:……
Conductivity …….. mS/cm Temperature……°C

	Port	Starboard
Serial number engine:	.....	.....
Serial number drive:	.....	.....
Manufactured year:	.....	.....
No. of months in water since previous inspection:	.....	.....
Hours operation since previous inspection:	.....	.....

Hull □ plastic □ steel □ aluminum
Propeller □ bronze □ stainless steel
Sacrificial anodes on drive □ zinc □ aluminum □ magnesium □ iron
No. of anodes …….pcs.
Remaining anode mass: □ 25 % □ 50 % □ 75 % □ 100%
Active corrosion prot. □ Yes □ No

Shore current □ Yes □ No
Isolating transformer □ Yes □ No Type:……
Galvanic isolator □ Yes □ No Type:…….

Electrical system DC □ 12V □ 24V
No. of batteries……pcs
Batteries in groups: □ Yes □ No (starter motor/accessories/loads)
Accessories DC □ Bow prop. □ Anchor winch. □ Fridge □ Other……..
Accessories 2-pole conn. □ Yes □ No

Electrical system AC □ Yes □ No
Aux. engine (Genset) □ Yes □ No
RCCB □Yes □ No
Accessories AC □ Lightning prot. □ Radio □ Depth sounder □ Other……..

Braid starter motor/engine	□ Yes	□ No	
Negative to engine block	□ Yes	□ No	
Starter motor connection	□ 1-pole	□ 1.5- pole	□ 2- pole
Bathing ladder	□ Yes	□ No	Material:
Ground plane	□ Yes	□ No	Material:
Trim tabs	□ Yes	□ No	Material:
Other equipment in water:……..			Material:
Equipment has own anodes	□ Yes	□ No	

Ground connections between all components exposed to water

□ Yes □ No □ Yes, all except the drive

Ground connections linked to separate zinc anode installed on hull

□ Yes □ No

Shore connection…….(rope, wire rope, chain)

Corrosion damage	□ drive	□ propellers	□ drive + propellers
Extensive paint damage	□ Yes	□ No	
Fouling		□ Yes	□ No
Corrosion under fouling	□ Yes	□ No	
Other boats have problems	□ Yes	□ No	

Has the boat been in another marina for a long time after the previous inspection?

□ Yes □ No

Corroded connectors	□ Yes	□ No

Which:……..

Take photographs of interesting observations!

DPH/DPR

Description of the drive

Various details of the design of the drive, which are important for the function of corrosion protection and the risk of various types of attack, are noted below. The drives are made from aluminum and have bronze or stainless steel propellers, which are insulated from the actual drive. The electrical components in the engine have 2-pole connections, i.e. every component has an insulated negative return cable. Two versions of D4 and D6 engines exist on the market:

1. With a braid between the starter motor and engine block. The engine block is connected to the negative pole on the battery.
2. Without a braid between the starter motor and engine block. The engine block is not connected to the negative pole on the battery (early versions).

Both the DPH and DPR drives are electrically connected to the engine block, which means that any stray currents that reach the engine block can be transferred to the drive.

DPH

The aluminum surfaces on the drive are carefully painted, which means that the zinc anodes only supply a small protective current to these surfaces. The dominating part of the protective current from the two anodes goes to the propeller cone and to the hydraulic pipes. This current flow eliminates galvanic corrosion on the drive at any points where there is paint damage.

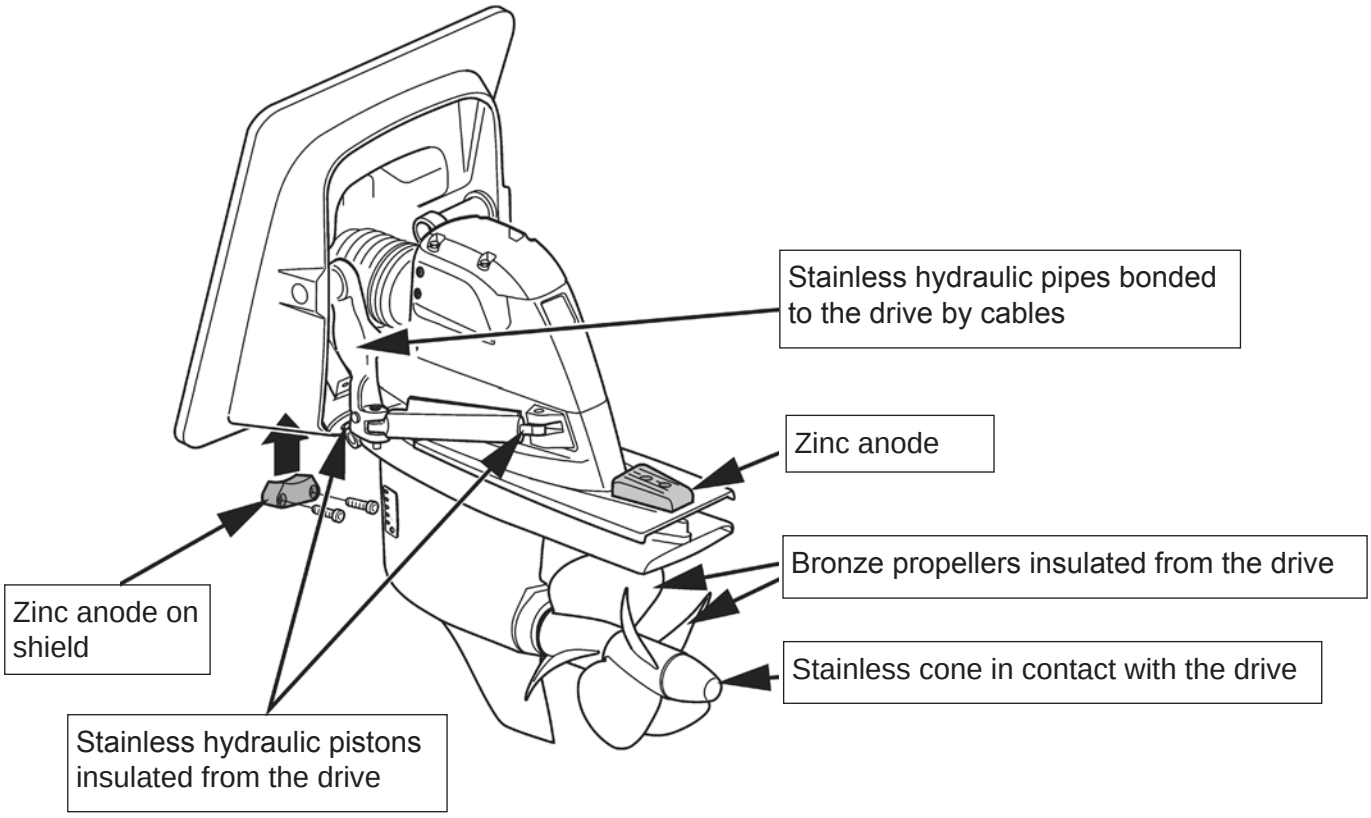

The bronze propellers do not cause any galvanic corrosion on the drive, since they are electrically insulated from the drive.

DPR

All stainless components except the propellers are in contact with the drive. The main purpose of the anodes is thus to eliminate galvanic corrosion on aluminum surfaces. At the same time, the stainless components are protected from local attack, particularly from crevice corrosion.

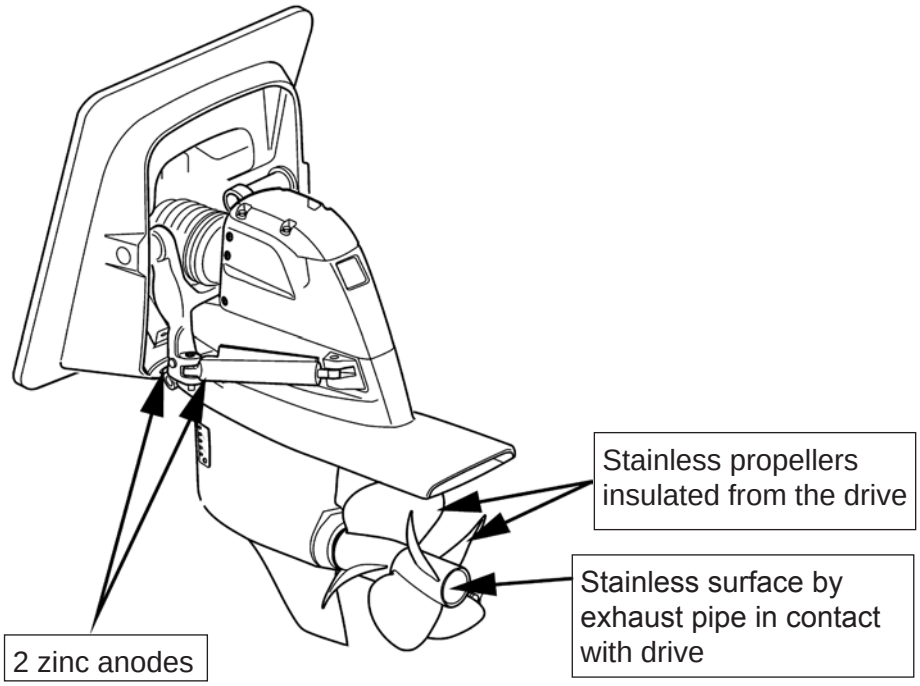

Twin drives (DPH and DPR) are linked by a stainless steel tie-bar. This is insulated from the drives and has a shaft anode to protect it from attack to the stainless material

Possible corrosion causes

Corrosion attacks on DPH/DPR drives is caused by one of the following 8 reasons:

- Insufficient cathodic protection.
- Galvanic corrosion from objects in the boat.
- Excessive protection from magnesium anodes.
- Galvanic corrosion via shore connection.
- Electric potential fields in the water.
- Stray current (DC) because of an electrical fault on the boat.
- Stray current (AC) because of an electrical fault on the boat.
- Stray current (AC) via shore current.

Insufficient cathodic protection

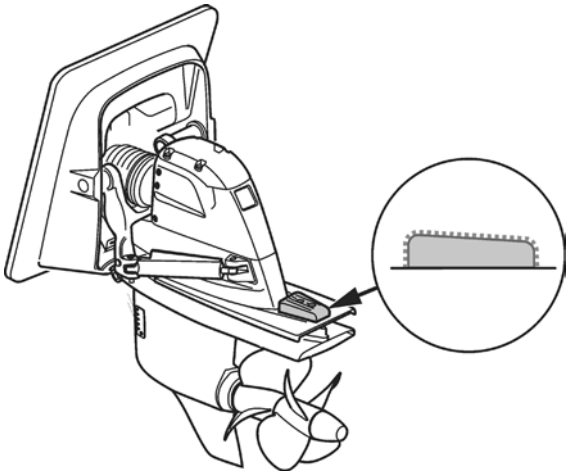

Zinc anode passivated
Thick, firmly attached corro-
sion products

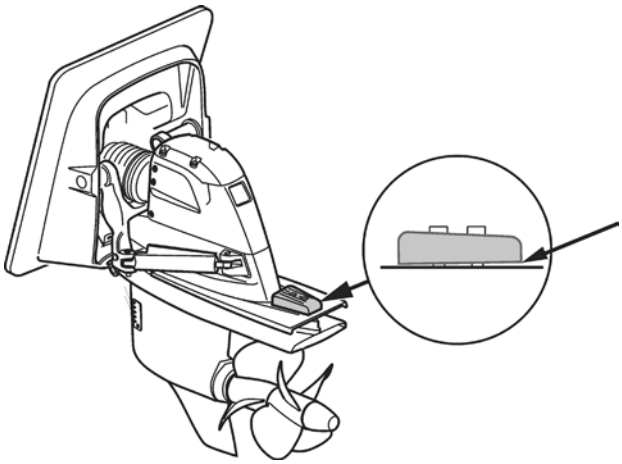

Poor contact anode-drive

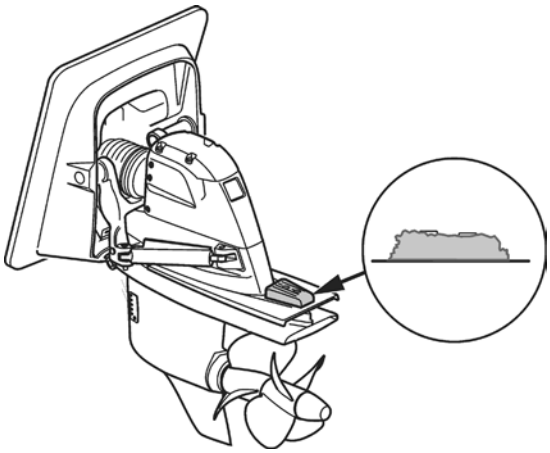

Anode used up (more than 50 %)

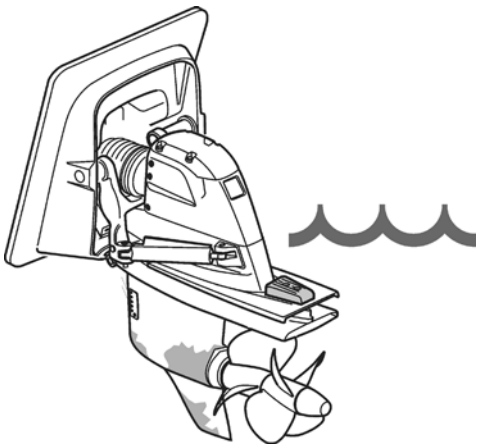

Large area paint damage on drive and boat is in fresh/brackish water

Galvanic corrosion from objects on boat

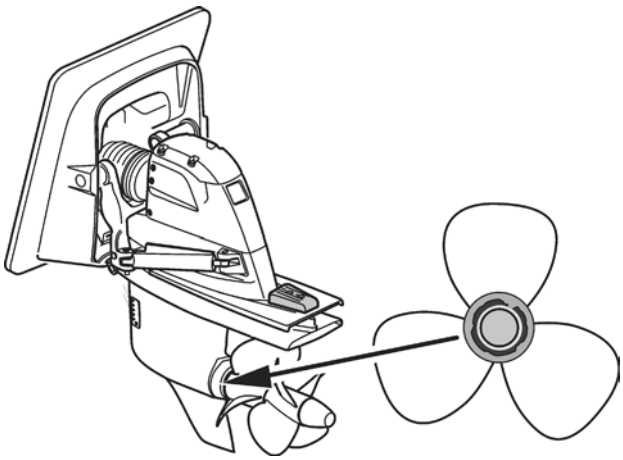

Contact drive/propeller

Area which must not be painted, about 10 mm round the shield

Contact with paint containing metal oxides

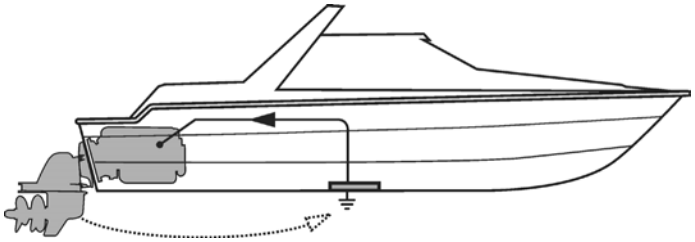

Drive connected to another object exposed to water, and this object is made from more noble material than aluminum (mild steel, stainless, copper, brass, bronze) at the same time as these objects do not have enough anodes.

Excess protection from magnesium anodes

In some cases, drives which are installed on boats that are exposed to brackish or fresh water are equipped with magnesium anodes. In seawater, these anodes can produce so much protective current that the aluminium is damaged.

Galvanic corrosion via shore connection

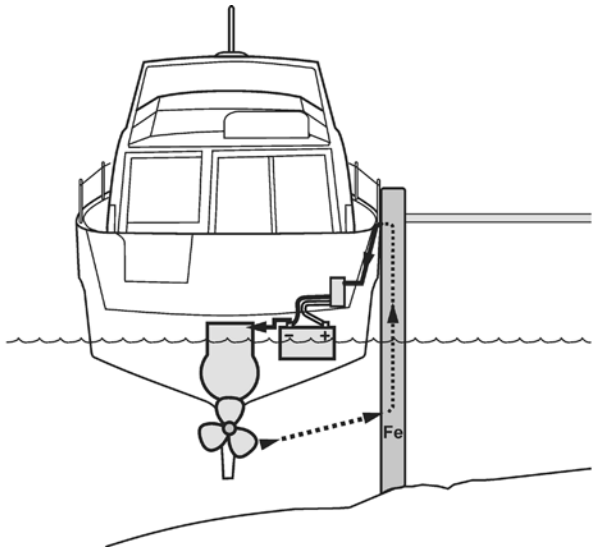

Direct contact with noble structure on land

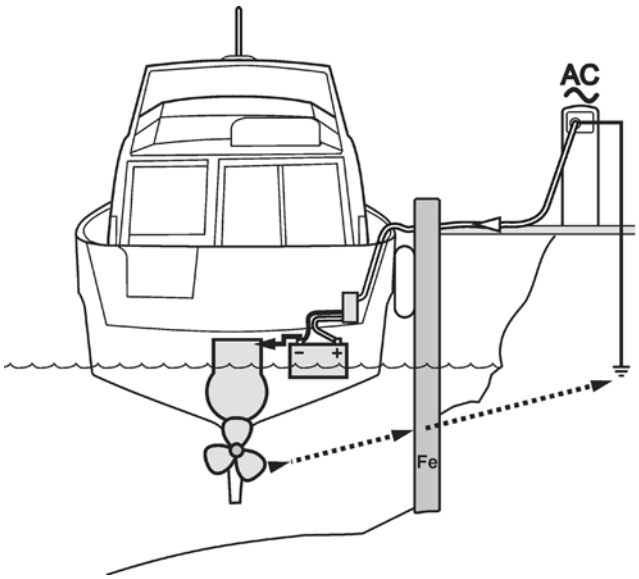

Contact via protective earth (ground) in shore current.

Electric potential field in water

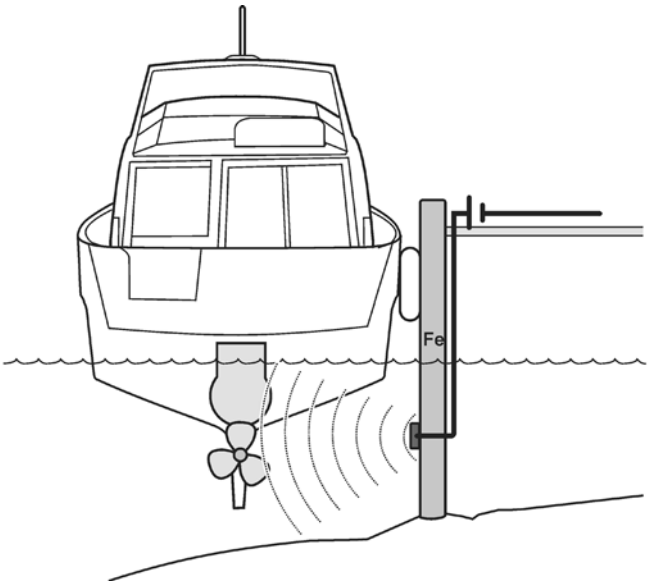

Leakage current from cathodic protection on sheet pile or another object in the marina.

Stray current (DC) due to electrical fault in the boat

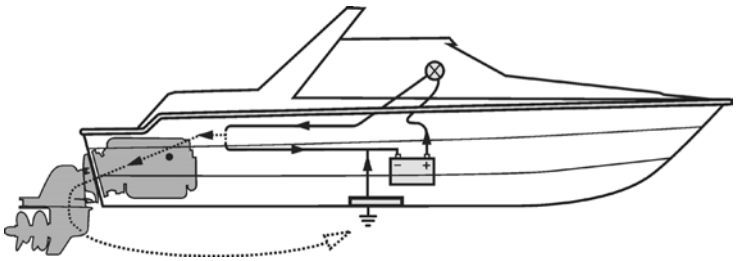

Stray currents that counteract the cathodic protection from the sacrificial anodes.

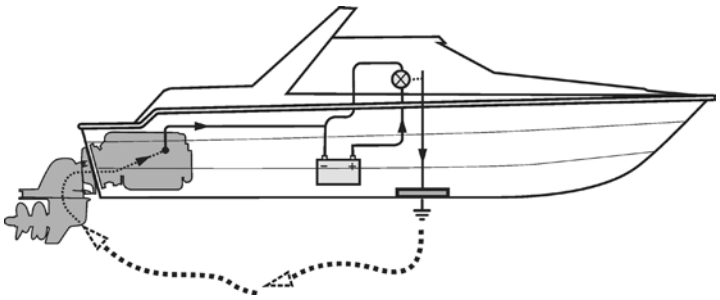

Large stray current enters and over-protects the aluminum.

Stray current (AC) due to electrical fault in the boat

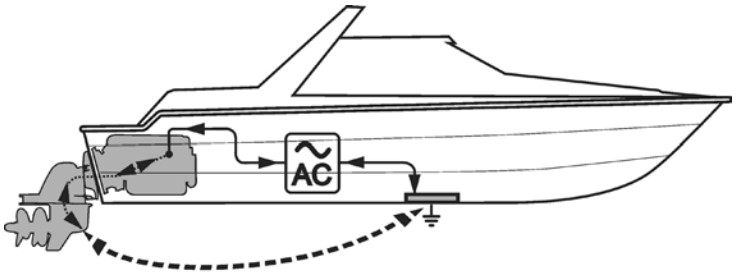

Stray current (AC) via shore connection

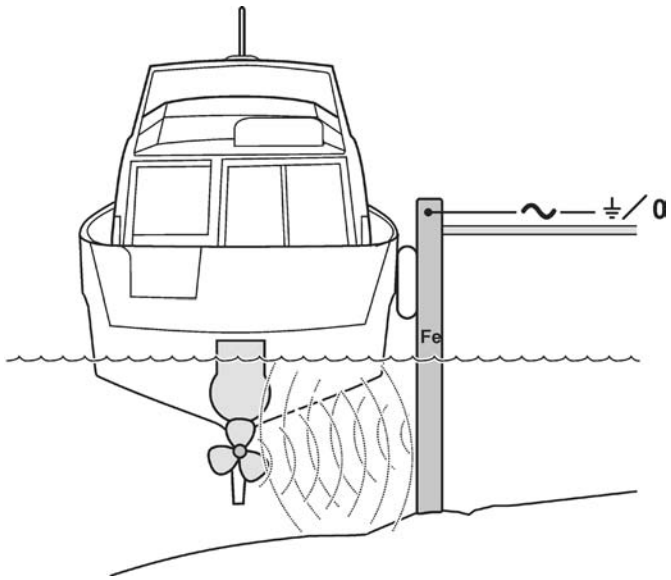

An AC current due to imbalance between the phases, which causes a current in the earth (ground)/neutral conductor.

Method of measurement

When measurement starts, the ignition must be switched off, main switch(es) off, all electric equipment switched off and any shore current disconnected.

Measurements must be done in chronological order and the results noted on the attached measurement report

Calibration of reference electrodes

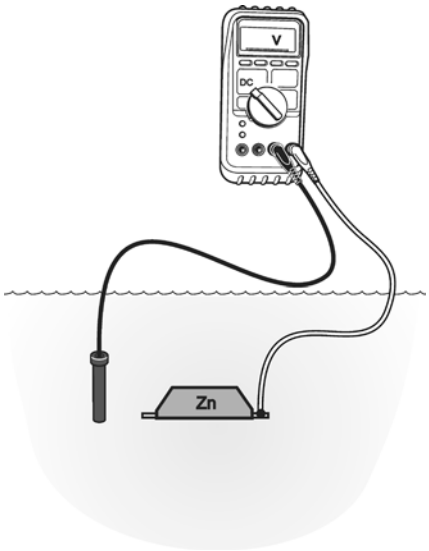

Reference electrode 1 is connected to COM (black) on the instrument and the zinc anode to V (red). Measurement range 2V DC. Lower the electrode and the zinc anode into the water. Note the value in mV.

Repeat the measurement with reference electrode 2. Note the value.
The measurements should be in the range of -1000 to -1100 mV. In addition, the calibration value for both reference electrodes should not differ by more than 5 mV. Note the calculated difference between the two calibration values in the report.

Measurement of voltage gradients in water

Connect reference electrode 1 to COM (black) on the instrument and reference electrode 2 to V (red). Measurement range 2V DC. Hang the electrodes down at bow and stern. Note the value in mV. The measured value must not exceed 40 mV.

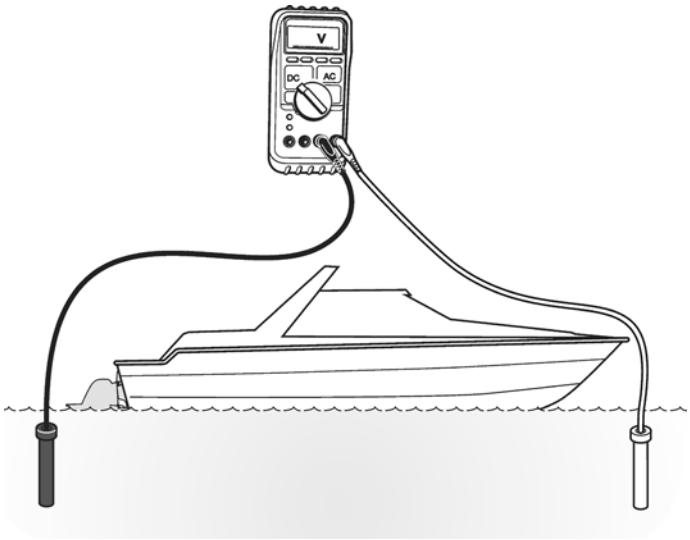

Change to measurement range 2V AC. Note the value in mV. The measured value must not exceed 30 mV.

Move the electrodes so that they are on either side of the boat. Measure both V DC and V AC.

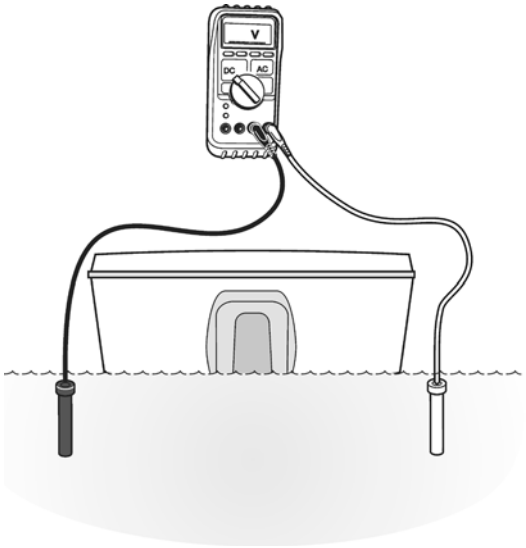

Note the value in mV. The measured value must not exceed 80 mV DC or 60 mV AC.

Potential measurement

Connect reference electrode 1 to COM (black) on the instrument and the measurement cable with clamp to V (red). Hang the reference electrode down close (maximum 40 cm) to the drive as in the figure below. Fix the clamp to a suitable screw head in contact with the engine block.

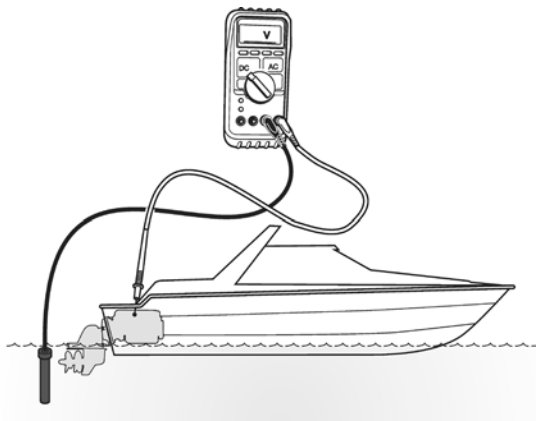

Measure V DC and V AC. Note the values on the report. V DC should be in the interval from -900 to -1100 mV* V AC must not exceed 15 mV.

***According to EN 12473**

Stray currents

Check that all fuses are intact and that all electric equipment has been switched off. The main switch must still be switched off. Some equipment such as clocks and radio draw current even when switched off. Disconnect them.

Retain the measurement configuration from previous potential measurement. Measurement range 2V DC. Switch the main current on. Note the value. The measured value must not differ by more than 20 mV from the previous value. Repeat the procedure after each of the following events:

- Starter key in ignition position.
- Start the engine.
- Start the bow propeller.
- Radio switched on.
- Radar switched on.
- Trim tab operation.
- Other equipment (GPS, depth sounder……)

If the boat is equipped with its own AC system, start the auxiliary engine (genset). Measurement range 2 V AC. Note the value. The measured value must not exceed 15 mV. After measurement, switch everything off again.

Set the measurement value to DC on the clamp ammeter and do a zero adjustment. Put the clamp round the positive cable, directly beside the battery.

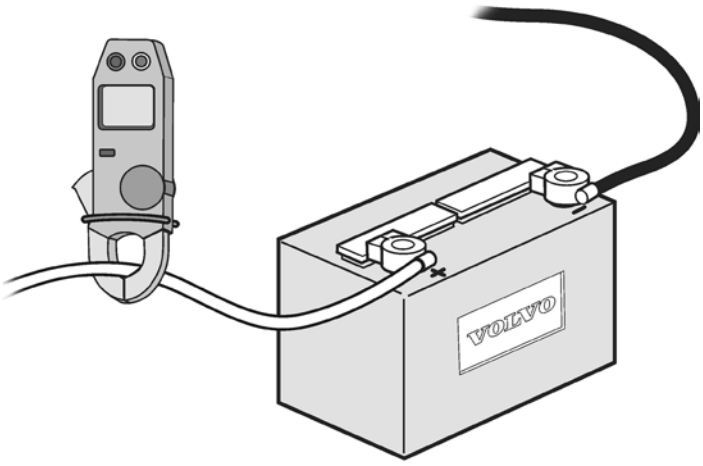

Note the measured current in mA. The measured current must not exceed 10 mA.

If there are several batteries repeat the measurement for each battery.

Shore current

Retain the measurement configuration with a connection to engine earth (ground) and the reference electrode immersed beside the drive. Measure V DC and V AC. Note the values. Then connect the shore current.

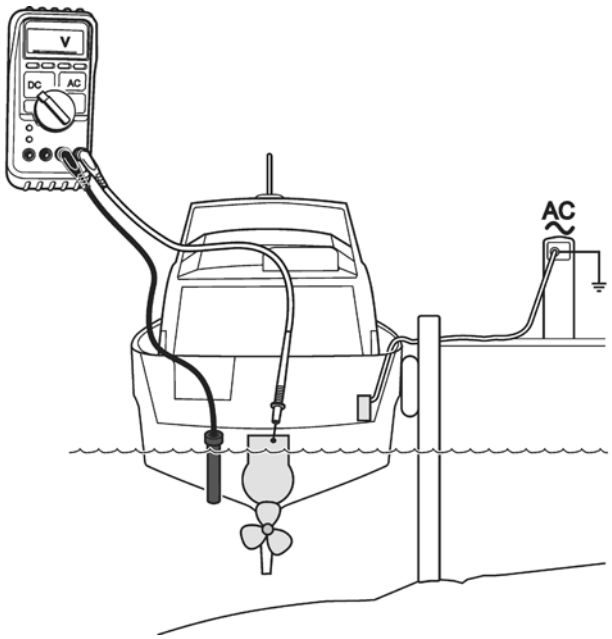

Repeat the V DC and V AC measurements. Note the values. The values must not change by more than +20 mV DC and 15 mV AC. After measurement, disconnect shore current.

Measurement report

Type of measurement	Measured value	Criteria	Met	Action
Calibration reference 1	(mV)	-1000/-1100 mV	□ Yes □ No	1
Calibration reference 2	(mV)	-1000/-1100 mV	□ Yes □ No	1
Calibration	(mV)	Diff. ref.1-2<5 mV	□ Yes □ No	1
Gradient along boat DC	(mV)	<40 mV	□ Yes □ No	4
Gradient along boat AC	(mV)	<30 mV	□ Yes □ No	4
Gradient across boat DC	(mV)	<80 mV	□ Yes □ No	4
Gradient across boat AC	(mV)	<60 mV	□ Yes □ No	4
Potential drive DC	(mV)	-900/-1100 mV	□ Yes □ No	8
Potential drive AC	(mV)	< 15 mV	□ Yes □ No	7
Potential drive DC (current on)	(mV)	Change <+20 mV	□ Yes □ No	5
Potential drive DC (ignition on)	(mV)	Change <+20 mV	□ Yes □ No	5
Potential drive DC (starter motor)	(mV)	Change <+20 mV	□ Yes □ No	5
Potential drive DC (start bow propeller)	(mV)	Change <+20 mV	□ Yes □ No	5
Potential drive DC (radio on)	(mV)	Change <+20 mV	□ Yes □ No	5
Potential drive DC (radar on)	(mV)	Change <+20 mV	□ Yes □ No	5
Potential drive DC (trim tabs operated)	(mV)	Change <+20 mV	□ Yes □ No	5
Potential drive DC (……)	(mV)	Change <+20 mV	□ Yes □ No	5
Potential drive AC (auxiliary engine running)	(mV)	Change < 15mV	□ Yes □ No	6
Stray current DC	(mA)	<10 mA	□ Yes □ No	5
Potential drive DC (shore current not conn.)	(mV)			
Potential drive AC (shore current not conn.)	(mV)			
Potential drive DC (shore current connected)	(mV)	Change <+20 mV	□ Yes □ No	2
Potential drive AC (shore current connected)	(mV)	Change < 15 mV	□ Yes □ No	3

Actions

If all criteria are met, there are not faults in the installation and no external interference. Photograph the damage. Send the completed test report and photographs to Volvo Penta in Göteborg for further processing. If one or more criteria are not met, continue to measure / fault trace in the order given in the action column, leaving out the actions which meet with the set criteria.

1. Calibration.

Check that the measurement cable between the measurement electrode and the instrument is not damaged. Measure the reference electrode against the other reference electrode for a period of several minutes. If the potential difference is stable, continue the measurements. Use the electrode that complies with the criteria in the measurements that only require one electrode. Before the next investigation, both electrodes must be calibrated against a new electrode and the damaged one scrapped.

2. Shore current DC.

If the potential is changed in the negative direction when shore current is connected and the drive potential does not fall below -1100 mV, there is no danger at the moment. The fact that the potential changes shows that the shore current protective earth conductor is connected to the engine block. This can cause damage on other occasions. Recommend the installation of an isolating transformer or an galvanic isolator.

A galvanic isolator only protects in principle against galvanic currents. Note that if there is both AC and DC stray current action, the isolator does not offer any protection against DC.

If the potential changes in a negative direction when shore current is connected and the potential change is greater than -1100 mV, this indicates that there is an electrical fault in another nearby boat. Recommend the installation of an isolating transformer.

If the potential changes in the positive direction, there is galvanic action from one or several structures connected to the shore current protective earth (ground), such as electricity supply company's earthings, other boats etc. Cut the connection between the shore current protective earth (ground) and the engine block. Recommend the installation of an isolating transformer.

3. Shore current AC.

If the V AC changes more than the criterion, there is a risk of AC corrosion. Recommend the installation of an isolating transformer.

4. Voltage gradient in the water.

If there is a voltage gradient in the water, the marina management should be contacted. Demand that the reason is investigated and rectified. The boat should be moved to a different mooring while fault tracing continues.

5. Electrical fault in the boat (DC).

Before fault tracing starts, all equipment that drains current must be disconnected if it draws current even when switched off. This includes radios, clocks and automatic bilge pumps.

Undo the positive and negative cables from the battery and connect them to a multimeter. Measurement range Ω.

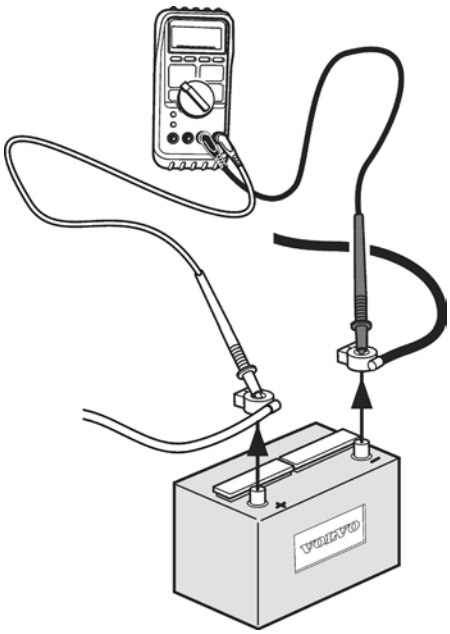

The following criteria can be applied:

- 10.000 Ω or higher. Almost perfect circuit. No problems. Previously measured current almost certainly was used by the disconnected equipment.
- 5.000 Ω. Small stray current.
- 1.000 Ω. Stray current which must be found and rectified.
- 500 Ω or lower. Major stray current. Must be rectified at once.

Reconnect the cables to the battery terminals. Put the clamp ammeter round the positive cable. Measurement range DC. Do a zero adjustment.

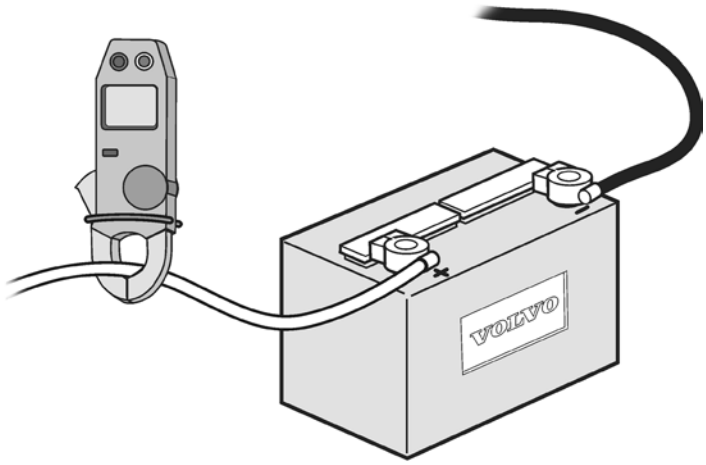

Remove one fuse at a time and then put it back. If the measurement value on the clamp ammeter disappears when a fuse is pulled out, this is a circuit that contains a cause of the problem. Trace the circuit and repair. In many cases, help may be required from the boat builder.

6. Electrical fault in the boat (AC).

Look for the earth fault. Install an RCCB.

7. Alternating current potential.

If actions 3, 4 or 6 have been taken, the AC potential on the drive should now be 0 mV. Measure this to check.

8. Insufficient cathodic protection.

If the measures taken so far have lead to finding all the faults, the drive potential should be in the range of -900 to -1100 mV DC. Check this. If a value outside this interval is found, there are deficiencies in the cathodic protection of the drive, due to faulty sacrificial anodes or the action of galvanic corrosion.

If the potential is more negative than -1100 mV, this indicates that a magnesium anode has been installed on the drive. Check if this is the case. If there are only zinc or aluminium anodes, there is still an electrical fault that causes a DC current from the water, into the drive. Repeat action 5. If a magnesium anode has been installed, a potential of -1200 mV can be accepted. If the value is more negative, the anode must be replaced by a zinc anode.

If the potential measured is more positive than – 900 mV, connect the included zinc anode to the engine block/drive via a connection cable. Lower the anode into the water close to the drive.

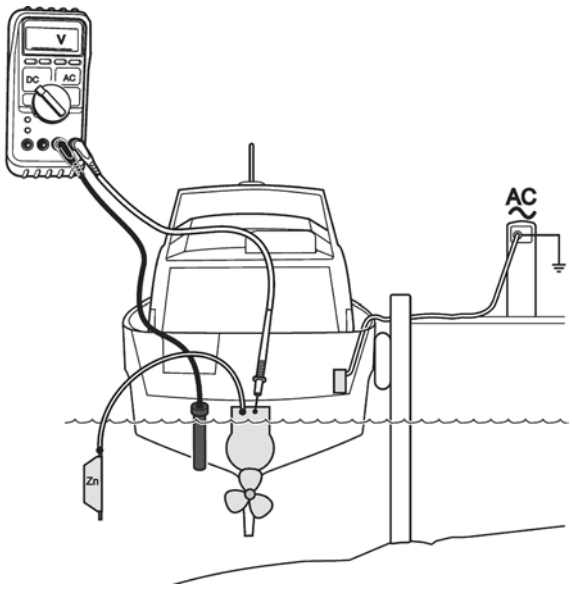

If the potential is still more positive than -900 mV, one of the following problems exists.

1. Contact has occurred between the drive and one of the propellers.
Leave the reference electrode hanging in the same position, but move the measurement equipment to first one and then the other propeller.

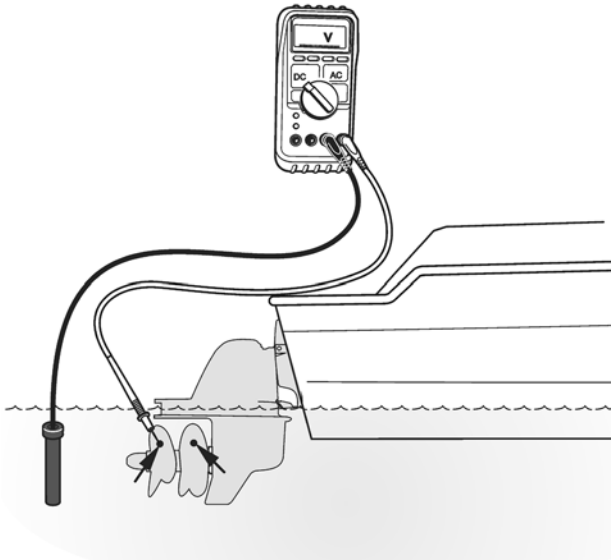

The measured potentials should change strongly in the positive direction to about 0/-100 mV if there is a stainless propeller or about -150/-250 mV if there is a bronze propeller. If the value does not change, or only changes marginally, the plastic sleeve between the shaft and the propeller has probably been damaged and the propeller must be changed.

2. There is contact with a more noble structure via the land connection.
Move the measurement equipment back to the engine block/drive. Untie the boat from the shore and ensure that there is no contact with any other adjacent object. Check whether this action gives any change in potential.

3. There is contact with a more noble structure on the boat hull (earth/ground plane etc.).
Localize the metallic structures installed on or through the hull. Measure the potential difference between the engine block and each structure.

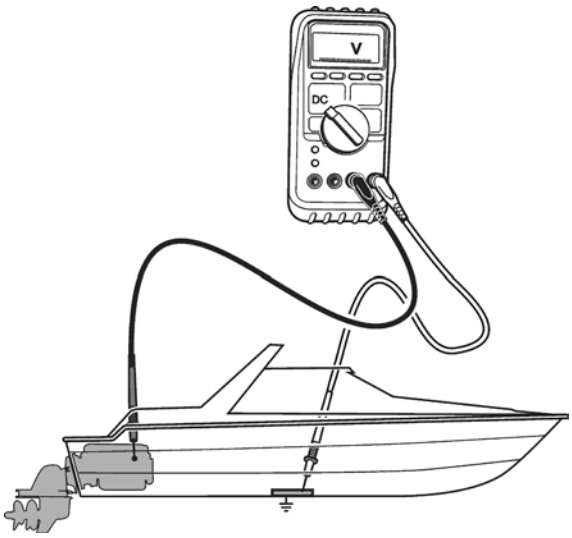

If a structure is deliberately bonded, or inadvertently bonded to the engine block/drive, the potential difference will be zero. If a potential difference is found, they are insulated from each other. Structures in contact with the drive must be protected with so many anodes that the potential criterion for aluminum is met, even if the structure itself does not need such strong protection.

4. Large areas of paint damage and the water is in fresh/brackish water.
No contact with other structures, i.e. no galvanic effects. Nor was connecting another anode able to provide protection, i.e. the cause is not a fault in one of the other anodes. This case can occur in water with low salt content, if the paint has disappeared from a large area of the drive. Connect more anodes.

If the drive potential is moved to a value in the range of -900/-1100 mV when the extra anode is connected, there is a fault in the sacrificial anode on the boat. Check if the anode has mostly been used up, has poor contact with the drive, or if it is covered with a thick layer of firmly attached corrosion products.

IPS

Description of the drive

The drives are made from nickel aluminum bronze and the propellers are made of the same material, so the drive and propellers have not been insulated from each other. The actual drive is insulated from the engine block, so any stray currents should not normally be transmitted to the drive. The electrical components in the engine have 2-pole connections, i.e. every component has an insulated negative return cable. Two versions of D4 and D6 engines exist on the market:

1. With a braid between the starter motor and engine block. The engine block is connected to the negative pole on the battery.
2. Without a braid between the starter motor and engine block. The engine block is not connected to the negative pole on the battery (early versions).

Bronze has good resistance to corrosion in salt water. The material becomes covered by a dense protective layer of corrosion products. Two different sacrificial anodes are installed, to ensure that this layer is efficiently generated and to prevent galvanic action from stainless components on the drive. One iron anode has been installed on the exhaust pipe and an aluminium anode has been installed on the transom and connected to the drive by a cable.

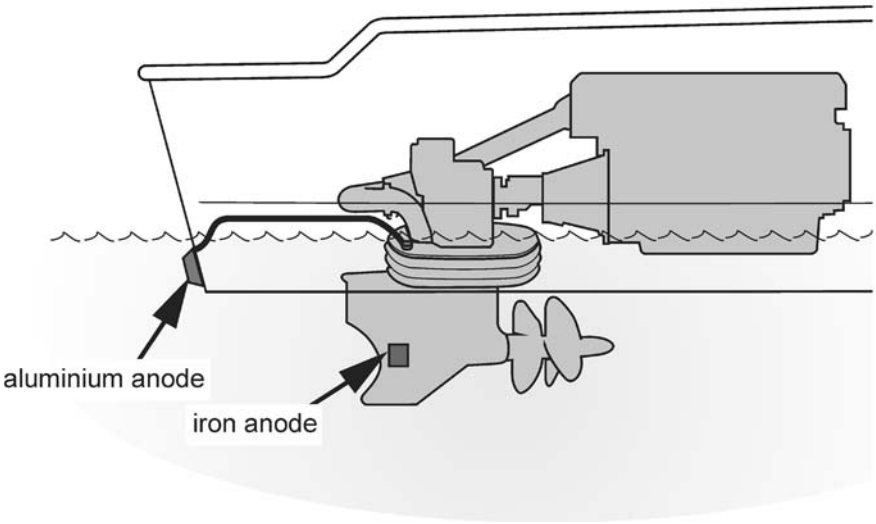

Possible corrosion causes

Bronze is less sensitive to electric and galvanic action than aluminum. This means that bronze is only affected by stray DC currents leaving the metal surface. In addition, the corrosion factor is a factor of 30 times less for AC corrosion on bronze compared

with aluminum. The driving force for galvanic corrosion is far less between bronze and stainless, compared with between aluminum and stainless. The following corrosion cases can occur:

- Not enough cathodic protection
- Galvanic corrosion from objects on the boat.
- Galvanic corrosion via a shore connection.
- Electric potential fields in the water.
- Stray currents (DC) because of electrical faults in the boat.
- Stray currents (AC) because of electrical faults in the boat
- Stray currents (AC) because of shore current.

Not enough cathodic protection

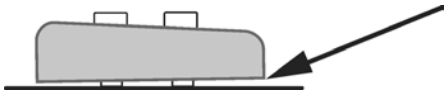

Poor contact anode-drive

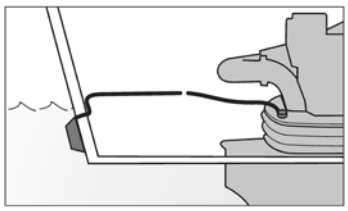

Broken connection between anode and drive

Anode used up

Galvanic corrosion from objects on the boat

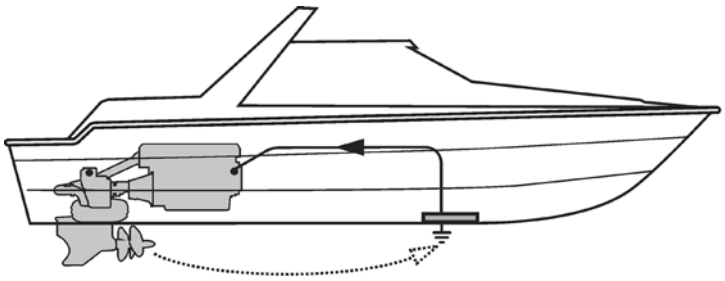

Drive connected to another object that is exposed to water and this object is made of more noble material than bronze, i.e. stainless steel. The stainless steel area must also be larger than the area of both drives, i.e. larger than 1 m^2.

Galvanic corrosion via a shore connection

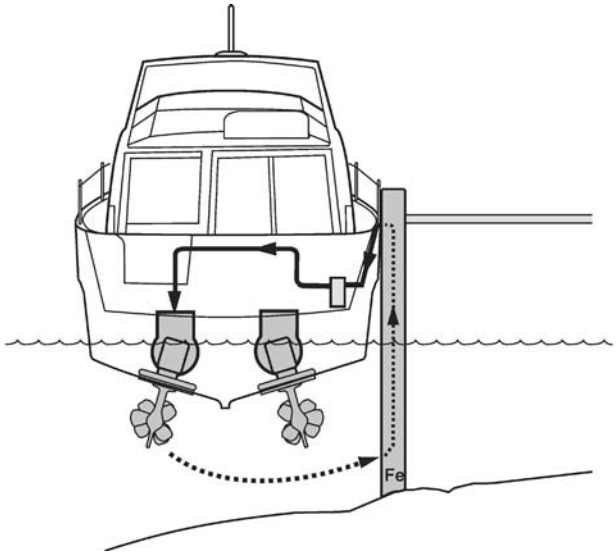

Direct connection with more noble (stainless) structure ashore.

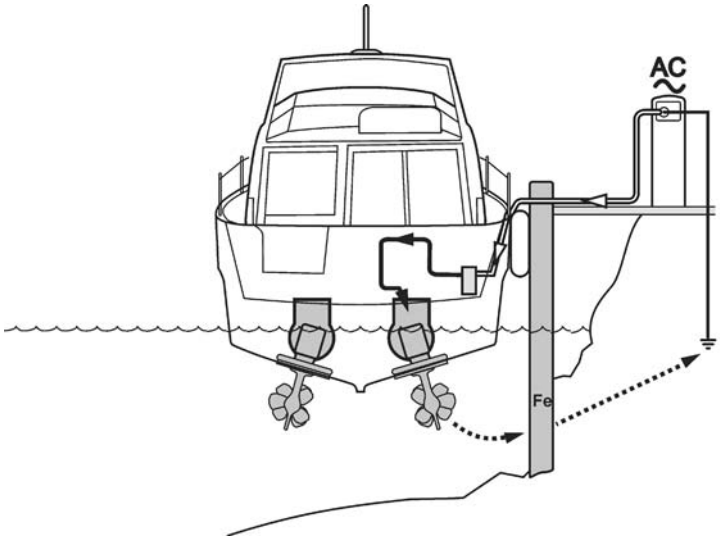

Contact via via shore current protective earth (ground).

Electric potential fields in the water

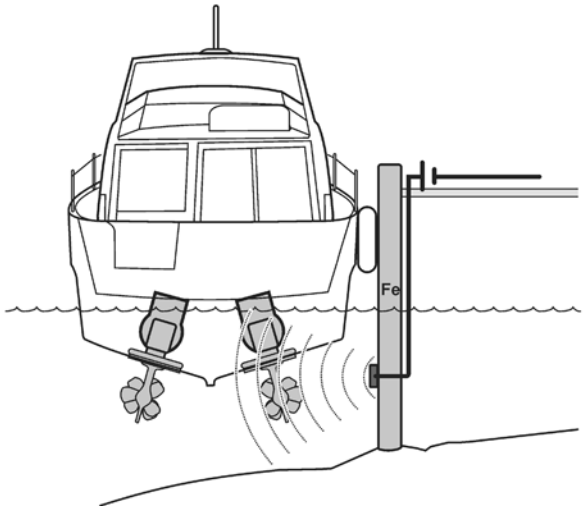

Leakage current from cathodic protection on sheet pile or another object in the marina.

Stray current (DC) due to electrical fault in the boat

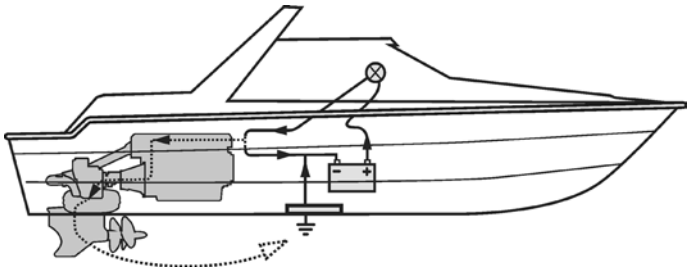

Stray current outwards.

Stray current (AC) due to electrical fault in the boat

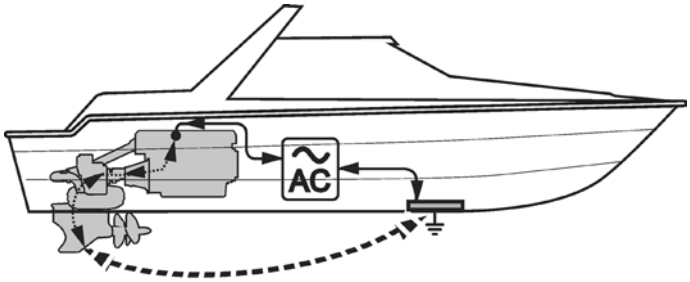

Stray current (AC) via shore connection

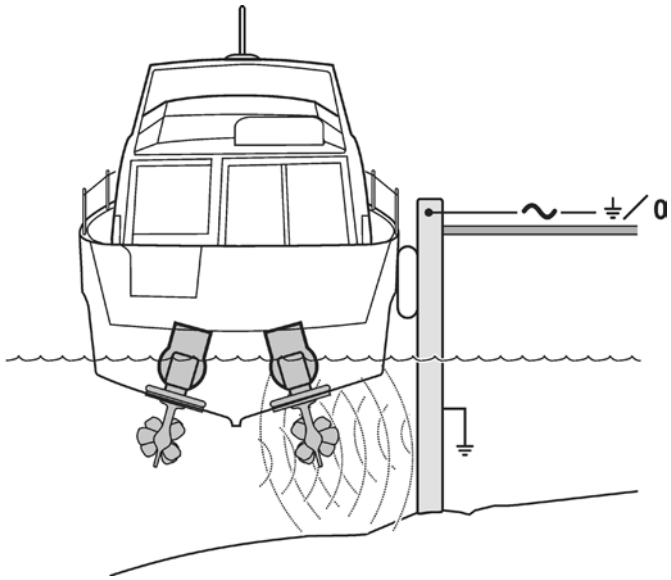

An AC current due to imbalance between the phases, which causes a current in the earth (ground)/neutral conductor.

In principle, all these corrosion causes can be avoided if the insulation between the drive and the engine/other structures is maintained. In other words, no galvanic connection can occur between any large stainless surface on the hull or via a shore connection or shore current. Nor can stray currents from an electrical fault aboard or via shore current be transmitted to the drive, as long as the drive is insulated. The risk of corrosion due to electric potential fields in the water will also be minimal on an insulated drive.

If the insulation is maintained, only “insufficient cathodic protection” can remain as a fault cause.

Methods of measurement

When measurement starts, the ignition must be switched off, main switch(es) off, all electric equipment switched off and any shore current disconnected.

Measurements must be done in chronological order and the results noted on the attached measurement report.

Calibration of reference electrodes

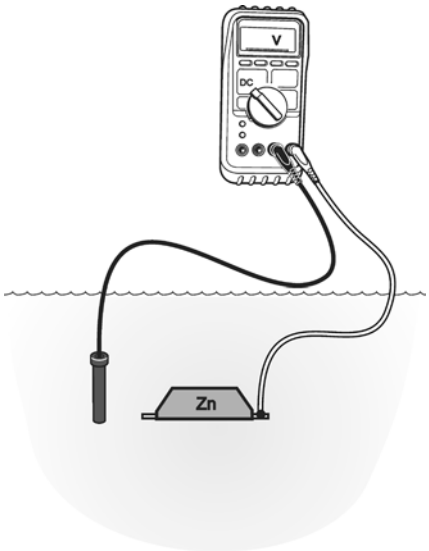

Reference electrode 1 is connected to COM (black) on the instrument and the zinc anode to V (red). Measurement range 2V DC. Lower the electrode into the water. Note the value in mV.

Repeat the measurement with reference electrode 2. Note the value.

The measurements should be in the range of -1000 to -1100 mV. In addition, the calibration value for both reference electrodes should not differ by more than 5 mV. Note the calculated difference between the two calibration values in the report.

Potential measurement

Connect reference electrode 1 to COM (black) on the instrument and the measurement cable with clamp to V (red). Hang the reference electrode down close to the drive as in the figure below. Fix the clamp to a suitable screw head in contact with the drive.

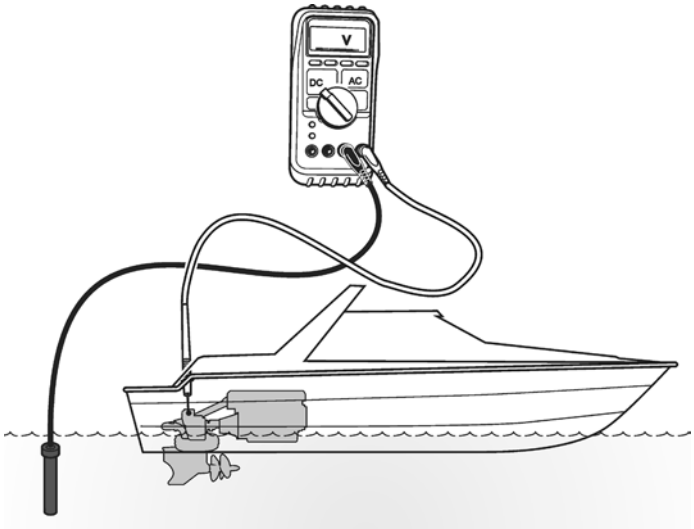

Measure V DC. Note the values on the report. The value should not be more negative than -450 mV* in sea water or -150 mV** in fresh water. Repeat the measurement for the other drive.

***According to EN 12473 ** According to EN 12954**

Measuring the drive insulation

First check that no connections have been made to the drive, i.e. if the drive has been connected to the boat's bonding system. If this is the case, remove the connections. Connect the measurement cables to unpainted parts in good contact with the drive and the engine block. Measurement V DC. Note the value on the test report.

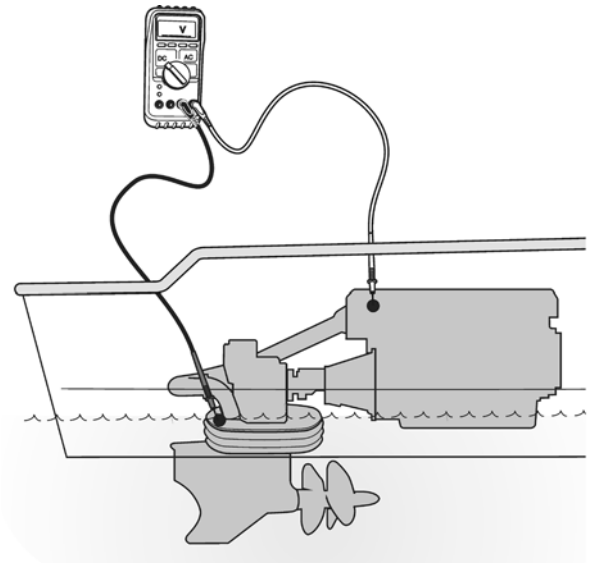

Then connect a 9 V battery between the drive and engine block. Take the battery away after about 10 seconds, Read off the voltage on the multimeter. If the value is high, >0.2 V, and falls rapidly, the insulation between the drive and engine block is sufficient.

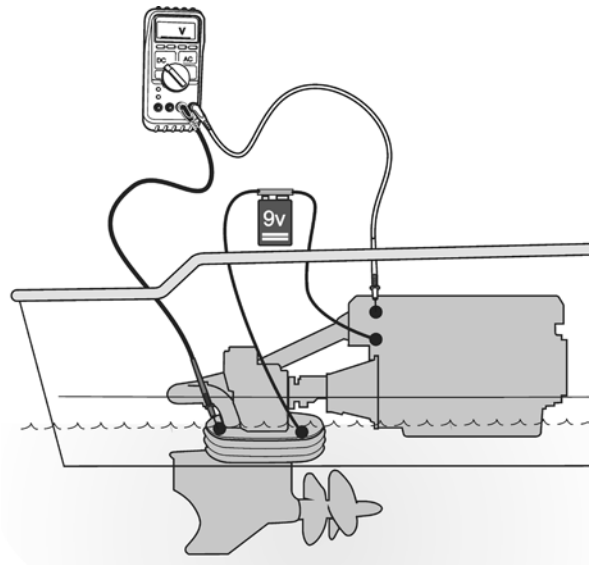

Repeat the procedure for the other drive.

Measurement report

Type of measurement	Measured value	Criteria	Met	Action
Calibration reference 1	(mV)	-1000/-1100 mV	□ Yes □ No	1
Calibration reference 2	(mV)	-1000/-1100 mV	□ Yes □ No	1
Calibration	(mV)	Diff. ref.1-2<5 mV	□ Yes □ No	1
Potential drive DC SB	(mV)	<-450 seawater <-150 fresh water	□ Yes □ No	3
Potential drive DC PO	(mV)	<-450 seawater <-150 fresh water	□ Yes □ No	3
Voltage after 10 seconds, drive SB	(V)	>0.2 V	□ Yes □ No	2
Voltage change, SB		Falls rapidly	□ Yes □ No	2
Voltage after 10 seconds, seconds, drive PO	(V)	>0.2 V	□ Yes □ No	2
Voltage change, PO		Falls rapidly	□ Yes □ No	2

Actions

If all criteria are met, there are not faults in the installation and no external interference. Photograph the damage. Send the completed test report and photographs to Volvo Penta in Göteborg for further processing. If one or more criteria are not met, continue to measure / fault trace in the order given in the action column, leaving out the actions which meet with the set criteria.

1. Calibration.

Check that the measurement cable between the measurement electrode and the instrument is not damaged. Measure the reference electrode against the reference electrode for a period of several minutes. If the potential difference is stable, continue the measurements. Use the electrode that complies with the criteria in the measurements that only require one electrode. Before the next investigation, both electrodes must be calibrated against a new electrode and the damaged one scrapped.

2. Not enough insulation.

If the drive was not insulated from other structures, there can be a number of different causes of the attack. If you want to find the direct cause, you can follow the plan of action described for DPH/DPR. But use the following criteria:

Shore current DC: The potential must not change to a value more positive than -450 mV in sea water or -150 mV in fresh water.
Shore current AC: The AC potential must not exceed 100 mV.
Voltage gradients in the water: Alongship <40 mV DC or <200 mV AC.
Athwartship < 80mV DC or <400 mV AC

Electrical fault in the boat DC: <+20 mV (same as DPH/DPR).
Electrical fault in the boat AC: <100 mV.
After fault tracing has been completed, remove the short circuit.

3. Not enough cathodic protection

The drive potential should now be more negative than -450 mV in sea water or -150 mV in fresh water. If a more positive value is found, the drive does not have enough cathodic protection. Undo the connection between the aluminium anode and the drive. If the potential only changes slightly, the aluminium anode has been used up or has poor contact. Install a new anode. The iron anode in the exhaust system is less critical. Just check it next time the boat is taken out of the water.

APPENDICE 1

Maximum corrosion due to stray currents

The resistance measured in a circuit corresponds to a given stray current, according to Ohm's law. If all this current flows out through a metal surface exposed to water, a certain amount of corrosion will occur, which varies from metal to metal. If the current is applied for a period of one year, the following corrosion will occur:

iron 9 g/mA
zinc 11 g/mA
aluminum 3 g/mA
for stainless steel, the risk of pitting corrosion and crevice corrosion will increase.

The maximum corrosion for a 12 V system will be as in the table below:

Resistance, Ω	Stray current, mA	Corrosion iron, g	Corrosion zinc, g	Corrosion Al, g
10000	1.2	11	13	4
5000	2.4	22	26	7
1000	12	108	132	36
500	24	216	264	72

For a 24 V system the current will be twice the value, and the corrosion will be twice the amount for the same circuit resistance.

APPENDICE 2

AC corrosion

Different metals have different sensitivity to AC (50/60 Hz). It is the current density (current per surface area) that determines the corrosion rate. At a current density of 1 A/m^2, the following corrosion will occur.

Steel 0.01 mm/year
Copper alloys 0.01 mm/year
Aluminum 0.3 mm/year

The current density that occurs for a given AC potential depends both on the magnitude of the area and the conductivity of the water. High conductivity gives high current density. The following guidelines can be used

Seawater 4 S/m
Baltic 1 S/m
Fresh water 0.02 S/m

An unpainted metal surface of 100 cm^2 has a contact resistance to seawater of 1 Ω. The corresponding value in the Baltic is 4 Ω and in drinking water it is 200 Ω.

If we assume that the maximum permissible corrosion is 1 mm in 10 years, the following table can be prepared for the maximum permissible AC potentials for different materials and different waters

Type of water	**Maximum permissible AC potential, mV AC**	
	Steel, copper alloys	Aluminum
Seawater	100	15
Baltic	400	60
Drinking water	20 000	3 500

APPENDICE 3

Voltage gradients

The permissible gradient depends on the area which absorbs current from the water and the area where the current leaves the boat. The larger the distance, the smaller is the gradient that can be accepted. The relative magnitudes of the areas are also important. In seawater, the effect is greater than with the same gradient in less salty water. If we neglect the resistance in the circuit between the two surfaces, the total difference in potential between the two surfaces can not be greater than the gradient in the water.

Normally, the potential changes where stray currents enter are considerably larger than when stray currents leave. We neglect this as well.

The following criteria can be used:
The DC potential for structures with no cathodic protection must not be displaced by more than 20 mV in the positive direction. For structures with cathodic protection, the potential must not be displaced to a value outside the potential range specified for full protection.

The values for AC potential are given in appendice 2.

The following assumptions are made (conservatively):

- The entire potential difference in the water is transferred as a potential difference on the metal surfaces.
- The potential changes are equal on both surfaces.
- The location of the metal surfaces is as below.
- Seawater

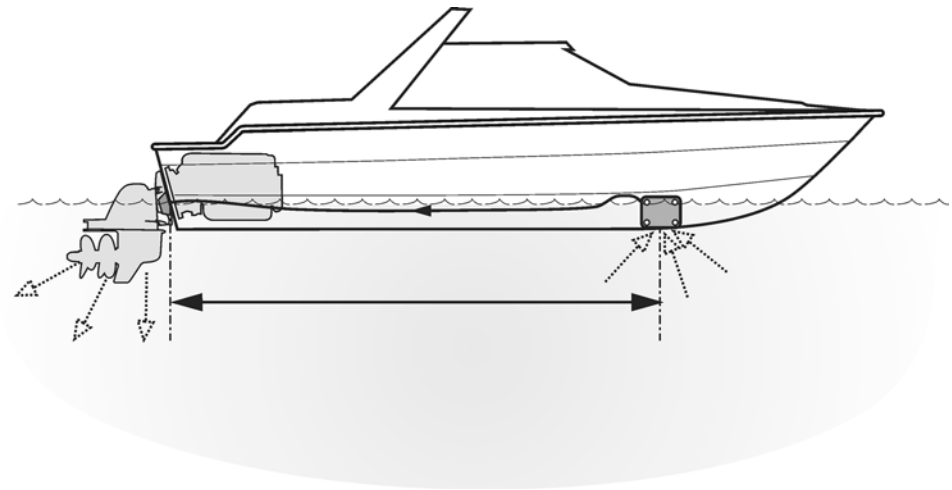

	Max forward, mV	Max aft, mV	Max gradient, mV
AC Al	15	15	30
AC Fe, Cu	100	100	200
DC	-20	+20	40

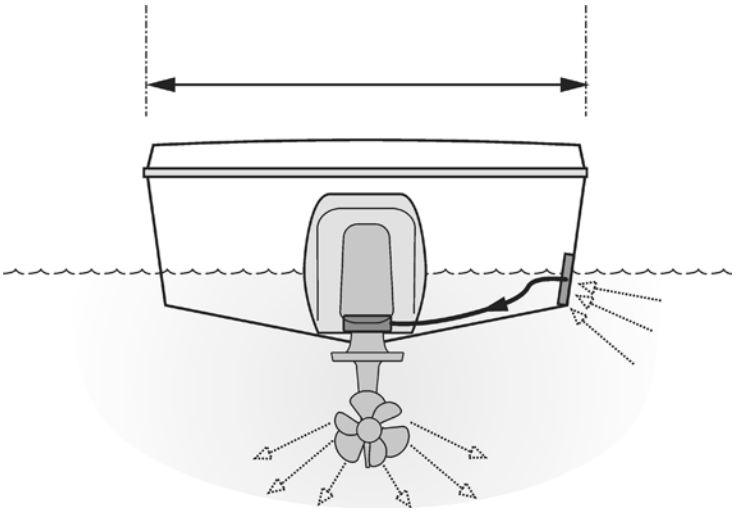

	Max PO, mV	Max SB, mV	Max gradient, mV
AC Al	15	15	60
AC Fe, Cu	100	100	400
DC	-20	+20	80

Quick guide DPH/DPR

Calibration (see page 21)

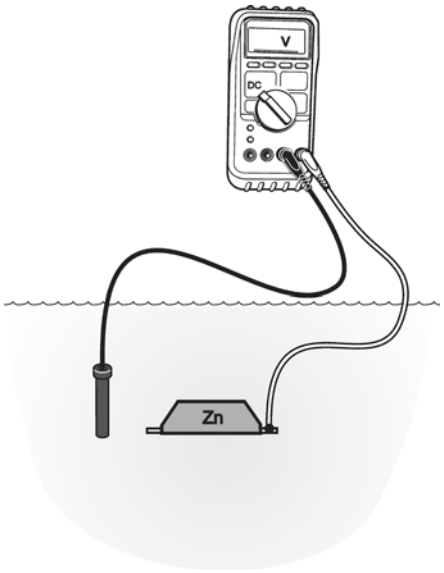

-1000 to -1100 mV DC
< 5 mV between the two reference electrodes

Voltage gradient alongship (see page 21)

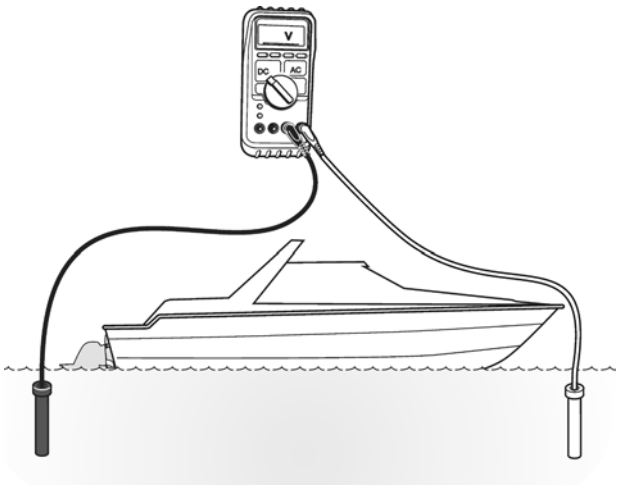

< 40 mV DC
< 30 mV AC

Voltage gradient athwartship (see page 22)

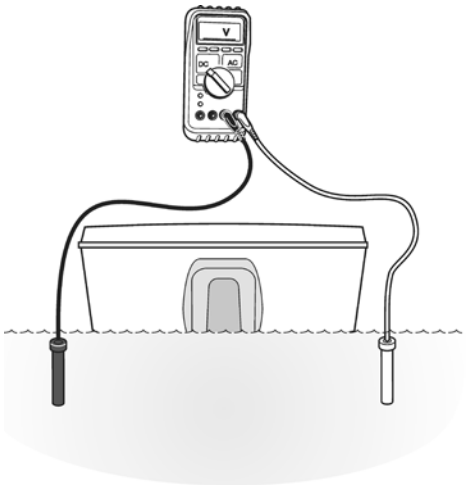

< 80 mV DC
< 60 mV AC

Potential measurement (see page 22)

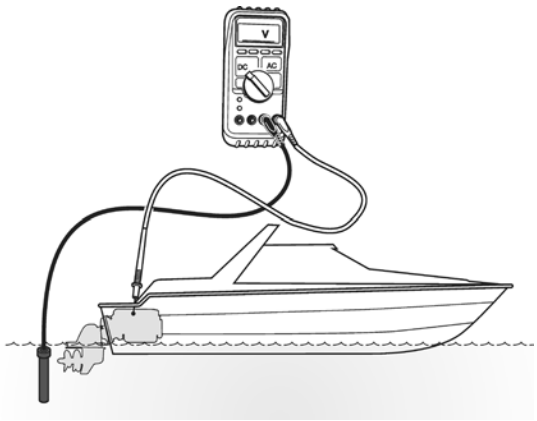

-900/-1100 mV DC
< 15 mV AC

Measure with:
- Everything off
- Ignition on
- Start engine
- Start bow propeller
- Radio on
- Radar on
- Trim tabs operated
- etc.

Stray current (see page 23)

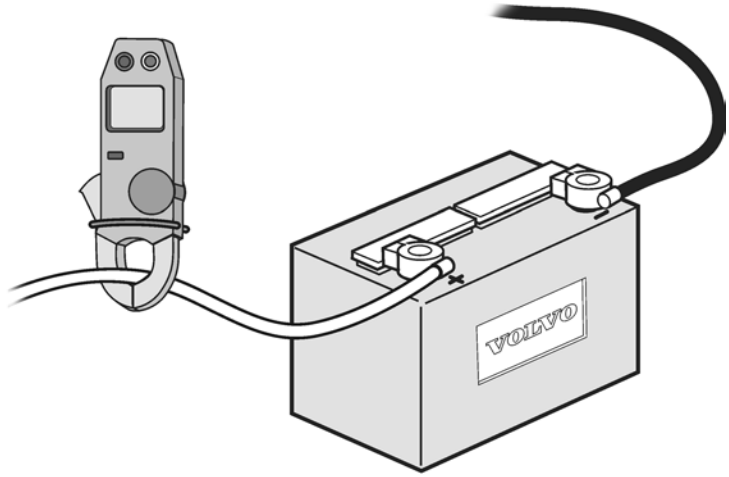

< 10 mA DC

Shore current (see page 24)

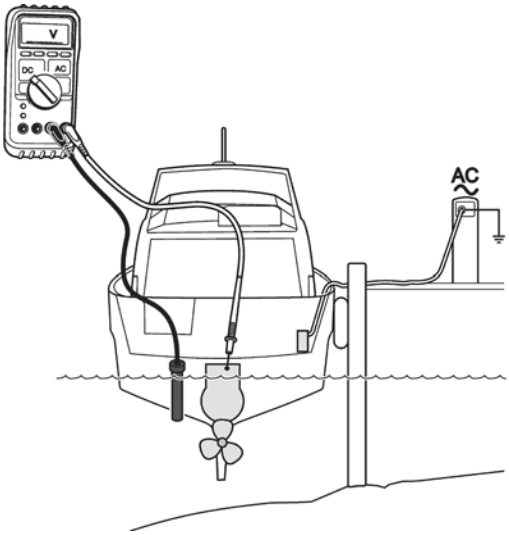

Change when shore current is connected
< +20 mV DC
< 15 mV AC

Quick guide IPS

Calibration (see page 35)

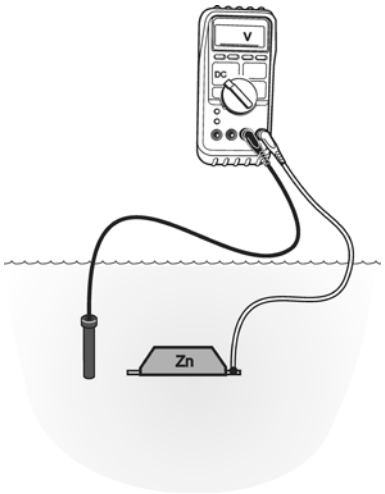

-1000 till -1100 mV DC
< 5 mV between the two reference electrodes

Potential measurement (see page 35)

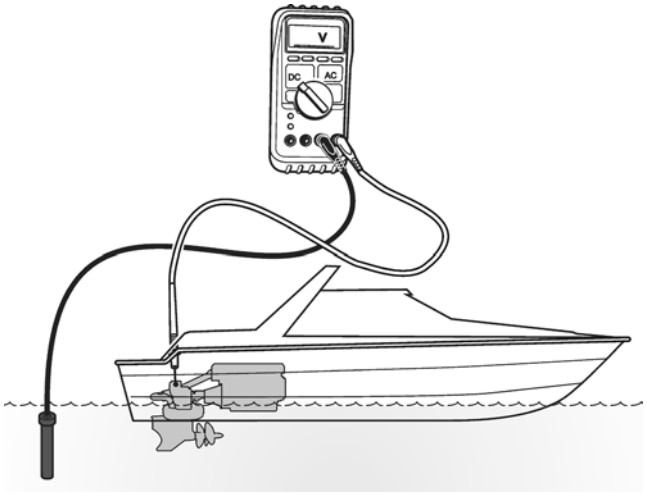

More negative than -450 mV DC in seawater
More negative than -150 mV DC in fresh water

Measuring drive insulation (see page 36)

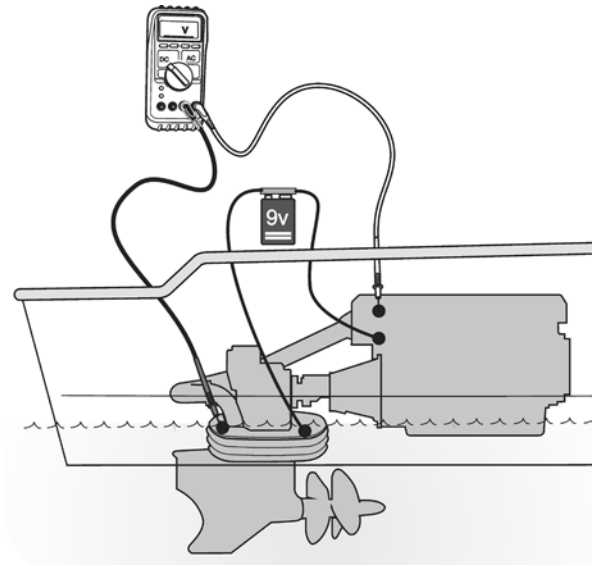

Measure U
Connect a battery for 10 s
Remove the battery
U>0.2 V and falls rapidly

Basic information

Before measurement starts, various observations should be made and noted for subsequent evaluation.

Date: .....
Person in charge: ..... Name of the boat.....
Boat owner: ..... Hull no .....
Harbor:..... Country:.....

Water □ seawater □ brackish □ fresh water
Salinity:……. pH:……
Conductivity …….. mS/cm Temperature……°C

	Port	Starboard
Serial number engine:	.....	.....
Serial number drive:	.....	.....
Manufactured year:	.....	.....
No. of months in water since previous inspection:	.....	.....
Hours operation since previous inspection:	.....	.....

Hull	□ plastic	□ steel	□ aluminum	
Propeller	□ bronze	□ stainless steel		
Sacrificial anodes on drive	□ zinc	□ aluminum	□ magnesium	□ iron
No. of anodes …….pcs.				
Remaining anode mass:	□ 25 %	□ 50 %	□ 75 %	□ 100%
Active corrosion prot.	□ Yes	□ No		

Shore current		□ Yes	□ No
Isolating transformer	□ Yes	□ No	Type:……
Galvanic isolator	□ Yes	□ No	Type:…….

Electrical system DC	□ 12V	□ 24V	
No. of batteries……pcs			
Batteries in groups:	□ Yes	□ No	(starter motor/accessories/loads)
Accessories DC	□ Bow prop.	□ Anchor winch.	□ Fridge □ Other……..
Accessories 2-pole conn.	□ Yes	□ No	

Electrical system AC	□ Yes	□ No
Aux. engine (Genset)	□ Yes	□ No
RCCB	□Yes	□ No
Accessories AC	□ Lightning prot.	□ Radio □ Depth sounder □ Other……..

Braid starter motor/engine	□ Yes	□ No	
Negative to engine block	□ Yes	□ No	
Starter motor connection	□ 1-pole	□ 1.5- pole	□ 2- pole
Bathing ladder	□ Yes	□ No	Material:
Ground plane	□ Yes	□ No	Material:
Trim tabs	□ Yes	□ No	Material:

Other equipment in water:…….. Material:

Equipment has own anodes □ Yes □ No

Ground connections between all components exposed to water

□ Yes □ No □ Yes, all except the drive

Ground connections linked to separate zinc anode installed on hull

□ Yes □ No

Shore connection…….(rope, wire rope, chain)

Corrosion damage □ drive □ propellers □ drive + propellers

Extensive paint damage □ Yes □ No

Fouling □ Yes □ No

Corrosion under fouling □ Yes □ No

Other boats have problems □ Yes □ No

Has the boat been in another marina for a long time after the previous inspection?

□ Yes □ No

Corroded connectors □ Yes □ No

Which:……..

Take photographs of interesting observations!

Measurement report DPH/DPR

Type of measurement	Measured value	Criteria	Met	Action
Calibration reference 1	(mV)	-1000/-1100 mV	□ Yes □ No	1
Calibration reference 2	(mV)	-1000/-1100 mV	□ Yes □ No	1
Calibration	(mV)	Diff. ref.1-2<5 mV	□ Yes □ No	1
Gradient along boat DC	(mV)	<40 mV	□ Yes □ No	4
Gradient along boat AC	(mV)	<30 mV	□ Yes □ No	4
Gradient across boat DC	(mV)	<80 mV	□ Yes □ No	4
Gradient across boat AC	(mV)	<60 mV	□ Yes □ No	4
Potential drive DC	(mV)	-900/-1100 mV	□ Yes □ No	8
Potential drive AC	(mV)	< 15 mV	□ Yes □ No	7
Potential drive DC (current on)	(mV)	Change <+20 mV	□ Yes □ No	5
Potential drive DC (ignition on)	(mV)	Change <+20 mV	□ Yes □ No	5
Potential drive DC (starter motor)	(mV)	Change <+20 mV	□ Yes □ No	5
Potential drive DC (start bow propeller)	(mV)	Change <+20 mV	□ Yes □ No	5
Potential drive DC (radio on)	(mV)	Change <+20 mV	□ Yes □ No	5
Potential drive DC (radar on)	(mV)	Change <+20 mV	□ Yes □ No	5
Potential drive DC (trim tabs operated)	(mV)	Change <+20 mV	□ Yes □ No	5
Potential drive DC (……)	(mV)	Change <+20 mV	□ Yes □ No	5
Potential drive AC (auxiliary engine running)	(mV)	Change < 15mV	□ Yes □ No	6
Stray current DC	(mA)	<10 mA	□ Yes □ No	5
Potential drive DC (shore current not conn.)	(mV)			
Potential drive AC (shore current not conn.)	(mV)			
Potential drive DC (shore current connected)	(mV)	Change <+20 mV	□ Yes □ No	2
Potential drive AC (shore current connected)	(mV)	Change < 15 mV	□ Yes □ No	3

Measures taken

Action	Result	Action	Result
1	……..	5	……..
2	……..	6	……..
3	……..	7	……..
4	……..	8	……..

Measurement report IPS

Type of measurement	Measured value	Criteria	Met	Action
Calibration reference 1	(mV)	-1000/-1100 mV	□ Yes □ No	1
Calibration reference 2	(mV)	-1000/-1100 mV	□ Yes □ No	1
Calibration	(mV)	Diff. ref.1-2<5 mV	□ Yes □ No	1
Potential drive DC SB	(mV)	<-450 seawater <-150 fresh water	□ Yes □ No	3
Potential drive DC PO	(mV)	<-450 seawater <-150 fresh water	□ Yes □ No	3
Voltage after 10 seconds, drive SB	(V)	>0.2 V	□ Yes □ No	2
Voltage change, SB		Falls rapidly	□ Yes □ No	2
Voltage after 10 seconds, seconds, drive PO	(V)	>0.2 V	□ Yes □ No	2
Voltage change, PO		Falls rapidly	□ Yes □ No	2

Measures taken

Action	Result
1	……..
2	……..
3	……..

Determination of fault cause if the drive was not insulated from the engine block/other structures (Measurements made using the procedures for DPH/DPR).

Action	Result	Action	Result
1	……..	5	……..
2	……..	6	……..
3	……..	7	……..
4	……..	8	……..

Report form

Do you have any comments or other viewpoints concerning this manual? Make a copy of this page, and write down your comments and send them to us. The address is at the bottom of the page. We would prefer you to write in Swedish or English.

From: .....

.....

.....

.....

Concerns publication: DRAFT 01-2007 Corrosion measurement 7747458

Proposal/Motivation: .....

.....

.....

.....

.....

.....

.....

.....

.....

Date: .....

Name: .....

AB Volvo Penta
Customer Support
Dept. 42200
SE-405 08 Gothenburg
Sweden

7747458 English 04-2007