MARINE

Installation Manual

MDL3
MDL4
MDL6

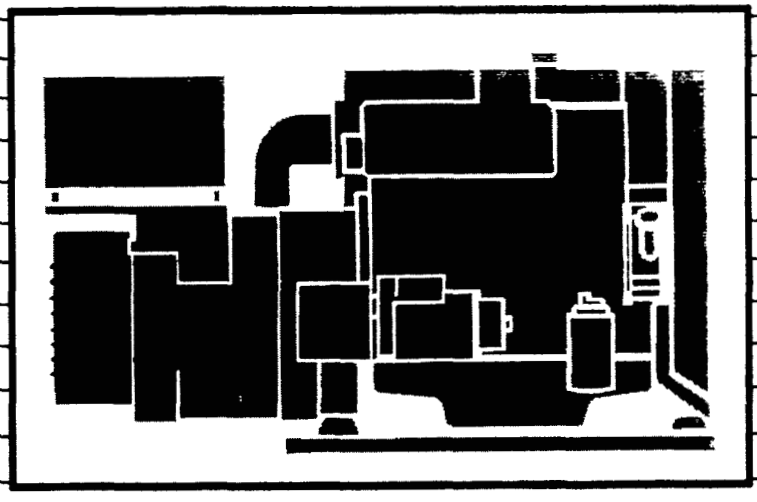

Printed in U.S.A. 1-91

934-0602

Before operating the generator set, read the Operator's Manual and become familiar with it and your unit. **Safe and efficient operation can be achieved only if the unit is properly operated and maintained.** Many accidents are caused by failure to follow fundamental rules and precautions.

Throughout this manual you will notice symbols which alert you to potentially dangerous conditions to the operator, service personnel, or the equipment itself.

⚠ DANGER ***This symbol warns of immediate hazards which will result in severe personal injury or death.***

⚠ WARNING ***This symbol refers to a hazard or unsafe practice which can result in severe personal injury or death.***

⚠ CAUTION ***This symbol refers to a hazard or unsafe practice which can result in personal injury or product or property damage.***

FUEL, ENGINE OIL, AND FUMES ARE FLAMMABLE AND TOXIC. Fire, explosion, and personal injury can result from improper practices.

- Benzene and lead, found in some gasoline, have been identified by some state and federal agencies as causing cancer or reproductive toxicity. When checking, draining or adding gasoline, take care not to ingest, breathe the fumes, or contact gasoline.
- Used engine oils have been identified by some state or federal agencies as causing cancer or reproductive toxicity. When checking or changing engine oil, take care not to ingest, breathe the fumes, or contact used oil.
- Do not fill fuel tanks with the engine running. Do not smoke around the generator set area. Wipe up any oil or gas spills. Do not leave oily rags in engine compartment or on the generator set. Keep this and surrounding area clean.
- Inspect fuel system before each operation and periodically while running.
- Equip the engine fuel supply with a positive fuel shutoff.
- Always disconnect the battery ground (–) lead first and reconnect it last. Make sure you connect the battery correctly. A direct short across the battery terminals can cause an explosion. Do not smoke while servicing batteries. Hydrogen gas given off during charging is very explosive.
- Keep a fire extinguisher available in or near the engine compartment and in other areas throughout the vessel. Use the correct extinguisher for the area. For most types of fires, an extinguisher rated ABC by the NFPA is available and suitable for use on all types of fires except alcohol.

EXHAUST GASES ARE DEADLY

- Provide adequate ventilation. Equip the bilge with a power exhauster.
- Be sure propulsion and generator set engine exhaust systems are free of leaks. Perform thorough, periodic inspections of the exhaust system and repair leaks immediately. Exhaust gases are deadly.
- Never sleep in the vessel with the generator set running unless the vessel is equipped with an operating carbon monoxide detector.

HOT COOLANT CAN CAUSE SEVERE PERSONAL INJURY

- Hot coolant is under pressure. Do not loosen the coolant pressure cap while the engine is hot. Let the engine cool before opening the pressure cap.

MOVING PARTS CAN CAUSE SEVERE PERSONAL INJURY OR DEATH

- Do not remove any belt guards or covers with the generator set running.
- Keep hands and loose clothing away from moving parts. Do not wear jewelry while servicing any part of the generator set.
- Never step on the generator set (as when entering or leaving the engine compartment). It can stress and break unit components, possible resulting in dangerous operating conditions... from leaking fuel, leaking exhaust fumes, etc.
- Before performing any maintenance on the generator set, disconnect its batteries to prevent accidental starting. do not disconnect or connect battery cables if fuel vapors are present. Ventilate the generator set compartment or bilge thoroughly with the power exhauster.

ELECTRICAL SHOCK WILL CAUSE SEVERE PERSONAL INJURY OR DEATH

- Do not make adjustments in the control panel or on engine with unit running. High voltages are present. Work that must be done while unit is running should be done only by qualified service personnel standing on dry surfaces to reduce shock hazard.
- DO NOT CONNECT THE GENERATOR SET TO THE PUBLIC UTILITY OR TO ANY OTHER ELECTRICAL POWER SYSTEM. Electrocution or damage to property can occur at a site remote from the boat where line or equipment repairs are being made if the set is connected to the power system. An approved transfer switch must be used if more than one power source is to be made available to service the boat.
- Do not work on this equipment when mentally or physically fatigued, or after consuming any alcohol or drug that makes the operation of equipment unsafe.

Redistribution or publication of this document, by any means, is strictly prohibited.

Copy and post these suggestions in potential hazard areas of the vessel.

Table of Contents

SECTION	TITLE	PAGE
	SAFETY PRECAUTIONS	Inside Front Cover
1	INTRODUCTION	1-1
	General	1-1
	Installation Codes and Safety Recommendations	1-1
2	SPECIFICATIONS	2-1
	MDL3	2-1
	MDL4	2-2
	MDL6	2-3
3	LOCATION and MOUNTING	3-1
	Location	3-1
	Mounting	3-1
	Sound Attenuating Housing	3-1
	Outline Drawings	3-2
4	VENTILATION	4-1
	General	4-1
	Requirements	4-1
	Coast Guard and NFPA Requirements	4-1
5	COOLING SYSTEM	5-1
	General	5-1
	Heat Exchanger Cooling	5-2
	Combined Cooling Systems	5-3
	Cooling System Check	5-3
6	EXHAUST SYSTEM	6-1
	General	6-1
	Below Load-Waterline Installation	6-2
	Above Load-Waterline Installation	6-4
7	FUEL SYSTEM	7-1
	General	7-1
	Fuel Lines	7-1
	Siphon Protection	7-3
	Fuel Tanks	7-3
	Fuel System Test	7-3
8	ELECTRICAL SYSTEM	8-1
	General	8-1
	Load Connections	8-1
	Remote Controls	8-9
	Battery	8-9
	Grounding	8-10
	Bonding	8-11
9	FINAL INSTALLATION CHECKS	9-1
	Installation Checks	9-1
	Initial Starting and Checks	9-1
	Voltage Adjustment	9-1

Redistribution or publication of this document,
by any means, is strictly prohibited.

Redistribution or publication of this document,
by any means, is strictly prohibited.

GENERAL

Each marine genset must be installed properly if it is to operate reliable, quietly, and most importantly—safely. Therefore, read this entire manual before starting the installation. The manual should be used only as a guide, as each installation must be considered on an individual basis. For operation and maintenance procedures, refer to the Operator's Manual 934-0124 that accompanies each genset.

Proper installation is very important. Requirements to consider include:

- Adequate cooling air
- Adequate combustion air
- Discharge of exhaust gases
- Discharge of circulated air
- Electrical connections and bonding
- Fuel connections
- Sea water connection
- Accessibility for operation and servicing
- Level mounting surface
- Adequate support under mounting points
- Noise levels

INSTALLATION CODES AND SAFETY RECOMMENDATIONS

The installation must follow recommendations of the American Boat and Yacht Council (ABYC) and the National Fire Protection Association (NFPA).

The installer should be familiar with the appropriate guidance found in the following publications:

ABYC *"Safety Standards for Small Craft"* from:

ABYC
15 East 26th St.
New York, NY 10010

NFPA 302 *"Pleasure and Commercial Motor Craft"* from:

NFPA
Batterymarch Park
Quincy, MA 02269

USCG 33CFR183 from:

U.S. Government Printing Office
Washington, D.C. 20404

⚠WARNING

INCORRECT SERVICE OR REPLACEMENT OF PARTS CAN RESULT IN SEVERE PERSONAL INJURY, DEATH, AND/OR EQUIPMENT DAMAGE. SERVICE PERSONNEL MUST BE QUALIFIED TO PERFORM ELECTRICAL AND/OR MECHANICAL SERVICE.

Redistribution or publication of this document, by any means, is strictly prohibited.

Redistribution or publication of this document,
by any means, is strictly prohibited.

MDL3

GENERATOR DETAILS

Type	Revolving Field, 4-Pole, Brushless
Ratings, General Marine:	
60 Hertz 3-phase	15 kW, 18.75 kVA at 0.8 PF
1-phase	15 kW, 15 kVA at 1.0 PF
50 Hertz 3-phase	12 kW, 15 kVA at 0.8 PF
1-phase	12 kW, 12 kVA at 1.0 PF
60 Hertz 3-phase	12.5 kW, 15.625 kVA at 0.8 PF
1-phase	12.5 kW, 12.5 kVA at 1.0 PF
50 Hertz 3-phase	10 kW, 12.5 kVA at 0.8 PF
1-phase	10 kW, 10 kVA at 1.0 PF
AC Voltage Regulation:	
Electronic Regulation	±2%
Magnetic Regulation	±5%

ENGINE DETAILS

Engine	Cummins® 3A1.7
Engine Speed (r/min)	1800/1500
Fuel	No.2 Diesel
Average Fuel Consumption:	
50 Hertz, 12.0 kW, Full Load	1.3 gph (4.9 L/h)
Half Load	0.50 gph (1.89 L/h)
10.0 kW, Full Load	1.1 gph (4.2 L/h)
Half Load	0.6 gph (2.3 L/h)
60 Hertz, 15.0 kW, Full Load	1.6 gph (6.1 L/h)
Half Load	0.8 gph (3.0 L/h)
12.5 kW, Full Load	1.34 gph (5.1 L/h)
Half Load	0.74 gph (2.8 L/h)
Fuel Inlet Size	1/4–18 NPTF
Fuel Return Outlet Size	1/8–27 NPT
Exhaust Outlet Hose Fitting	2.5 in. (64 mm) OD
Battery Requirements:	
Cold Cranking Amps @ 0° F (–18° C)	500
Battery Voltage, Standard System	12
*Quantity Required	1
Cooling System Capacity	10 quarts (9.4 L)
Sea Water Inlet/Outlet Hose Size	1.0 Inch (25.4 mm)
Sea Water Flow Rate:	
60 Hertz	15 gpm (57 L/min)
50 Hertz	12.5 gpm (47 L/min)
Total Air Per Minute Required (Generator Cooling and Combustion):	
60 Hertz	344 cu. ft./min (9.8 m³/min)
50 Hertz	287 cu. ft./min (8.2 m³/min)
Engine Oil Capacity (Filter, Lines, Crankcase)	6 quarts (5.7 L)

***24-Volt Optional System ..... Two 12-Volt Batteries In Series**

Redistribution or publication of this document, by any means, is strictly prohibited.

GENERATOR DETAILS

Type	Revolving Field, 4-Pole, Brushless
Ratings, General Marine:	
60 Hertz 3-phase	20 kW, 25 kVA at 0.8 PF
1-phase	20 kW, 20 kVA at 1.0 PF
50 Hertz 3-phase	16 kW, 20 kVA at 0.8 PF
1-phase	16 kW, 16 kVA at 1.0 PF
AC Voltage Regulation:	
Electronic Regulation	±2%
Magnetic Regulation	±5%

ENGINE DETAILS

Engine	Cummins® 4A2.3
Engine Speed (r/min)	1800/1500
Fuel	No.2 Diesel
Average Fuel Consumption:	
50 Hertz, Full Load	1.7 gph (6.4 L/h)
Half Load	1.0 gph (3.8 L/h)
60 Hertz Full Load	2.1 gph (7.9 L/h)
Half Load,	1.2 gph (4.5 L/h)
Fuel Inlet Size	1/4–18 NPTF
Fuel Return Outlet Size	1/8–27 NPT
Exhaust Outlet Hose Fitting	2.5 in. (64 mm) OD
Battery Requirements:	
Cold Cranking Amps @ 0° F (–18° C)	500
Battery Voltage, Standard System	12
*Quantity Required	1
Cooling System Capacity	10 quarts (9.4 L)
Sea Water Inlet/Outlet Hose Size	1.0 Inch (25.4 mm)
Sea Water Flow Rate:	
60 Hertz	15 gpm (57 L/min)
50 Hertz	12.5 gpm (47 L/min)
Total Air Per Minute Required (Generator Cooling and Combustion):	
60 Hertz	359 cu. ft./min (10.2 m³/min)
50 Hertz	298 cu. ft./min (8.5 m³/min)
Engine Oil Capacity (Filter, Lines, Crankcase)	6 quarts (5.7 L)

*24-Volt Optional System	Two 12-Volt Batteries in Series

Redistribution or publication of this document, by any means, is strictly prohibited.

GENERATOR DETAILS

Type	Revolving Field, 4-Pole, Brushless
Ratings, General Marine:	
60 Hertz 3-phase	30 kW, 37.5 kVA at 0.8 PF
1-phase	30 kW, 30 kVA at 1.0 PF
50 Hertz 3-phase	25 kW, 31.25 kVA at 0.8 PF
1-phase	25 kW, 25 kVA at 1.0 PF
AC Voltage Regulation:	
Electronic Regulation	±2%
Magnetic Regulation	±5%

ENGINE DETAILS

Engine	Cummins® 6A3.4
Engine Speed (r/min)	1800/1500
Fuel	No.2 Diesel
Average Fuel Consumption:	
50 Hertz, Full Load	2.6 gph (9.6 L/h)
Half Load	1.5 gph (5.7 L/h)
60 Hertz Full Load	2.92 gph (10.8 L/h)
Half Load,	1.68 gph (6.2 L/h)
Fuel Inlet Size	1/4–18 NPTF
Fuel Return Outlet Size	1/8–27 NPT
Exhaust Outlet Hose Fitting	2.5 in. (64 mm) OD
Battery Requirements:	
Cold Cranking Amps @ 0° F (–18° C)	500
Battery Voltage, Standard System	12
*Quantity Required	1
Cooling System Capacity	3.3 gal. (12.5 L)
Sea Water Inlet/Outlet Hose Size	1.25 Inch (31.7 mm)
Sea Water Flow Rate:	
60 Hertz	24 gpm (91 L/min)
50 Hertz	20 gpm (76 L/min)
Total Air Per Minute Required (Generator Cooling and Combustion):	
60 Hertz	390 cu. ft./min (11.1 m^3/min)
50 Hertz	325 cu. ft./min (7.1 m^3/min)
Engine Oil Capacity (Filter, Lines, Crankcase)	9 quarts (8.5 L)

***24-Volt Optional System ..... Two 12-Volt Batteries in Series**

Redistribution or publication of this document, by any means, is strictly prohibited.

Redistribution or publication of this document,
by any means, is strictly prohibited.

LOCATION

The genset location must be a well ventilated area, insulated, close to the fuel supply and the center of electrical load distribution. Usually those conditions are in the same room or compartment as the propulsion engine. However, a genset cannot be installed in the propulsion engine compartment unless specific conditions are met.

USCG regulation 33CFR183 pertains to gasoline fuel systems, and requires a genset operating in a gasoline fuel environment to be *ignition protected.* This means a genset capable of operating in an explosive environment without igniting that environment.

The MDL-series gensets are not *ignition protected* and cannot be operated in a gasoline-fueled environment. They can, however, be operated in a diesel-fueled environment.

⚠WARNING ***Gasoline fire or explosion can result in severe personal injury or death. Do not install a diesel generator set in the same room or compartment of a gasoline propulsion engine or generator set. The diesel unit may not be ignition protected and can ignite gasoline fumes.***

Select a location that will allow adequate space on all sides for ventilation and servicing of the genset, preferably on and parallel with the keel or vessel center line. Keep the genset away from living quarters, and away from bilge splash and vapors.

MOUNTING

The floor must be flat and give support directly under the genset mounting points. See Figure 3-2. A one inch (25 mm) clearance around the genset is required to permit rocking on its mounts without restraint. Additional space must be allowed for proper air-ventilation for cooling and combustion, as well as for service access. Also, allow access for periodic maintenance such as oil fill, coolant fill, spark plug replacement, etc. The entire exhaust system must be accessible so a periodic visual and audible check for leakage can be made by the operator.

Figure 3-2 shows the drip pan dimensions. Install two hold-down clamps, or two through-bolts (1/2 inch [13 mm]) to the drip pan on both sides of the genset. Tighten all fasteners securely.

Figure 3-3 on the following page shows the genset outline drawings. All pertinent dimensions and location of hook-ups are shown.

SOUND ATTENUATING HOUSING

The sound attenuating housing, shown in Figure 3-1, is an option available for noise reduction. It is an insulated enclosure that totally surrounds the genset. Openings are provided for all external connections. Installation instructions are furnished with the housing. Contact the local dealer or distributor for details.

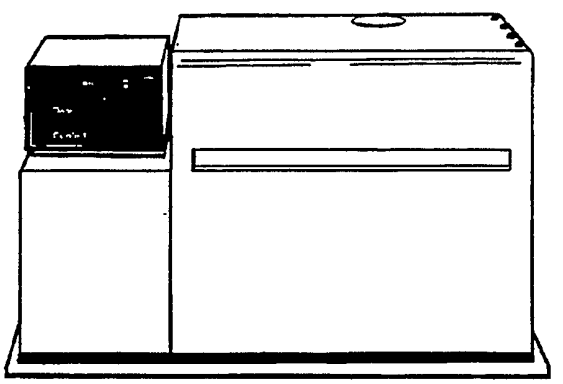

FIGURE 3-1. SOUND ATTENUATING HOUSING

Redistribution or publication of this document, by any means, is strictly prohibited.

(MM)

DRY WEIGHT: 845 LBS (383 KG)

MDL3

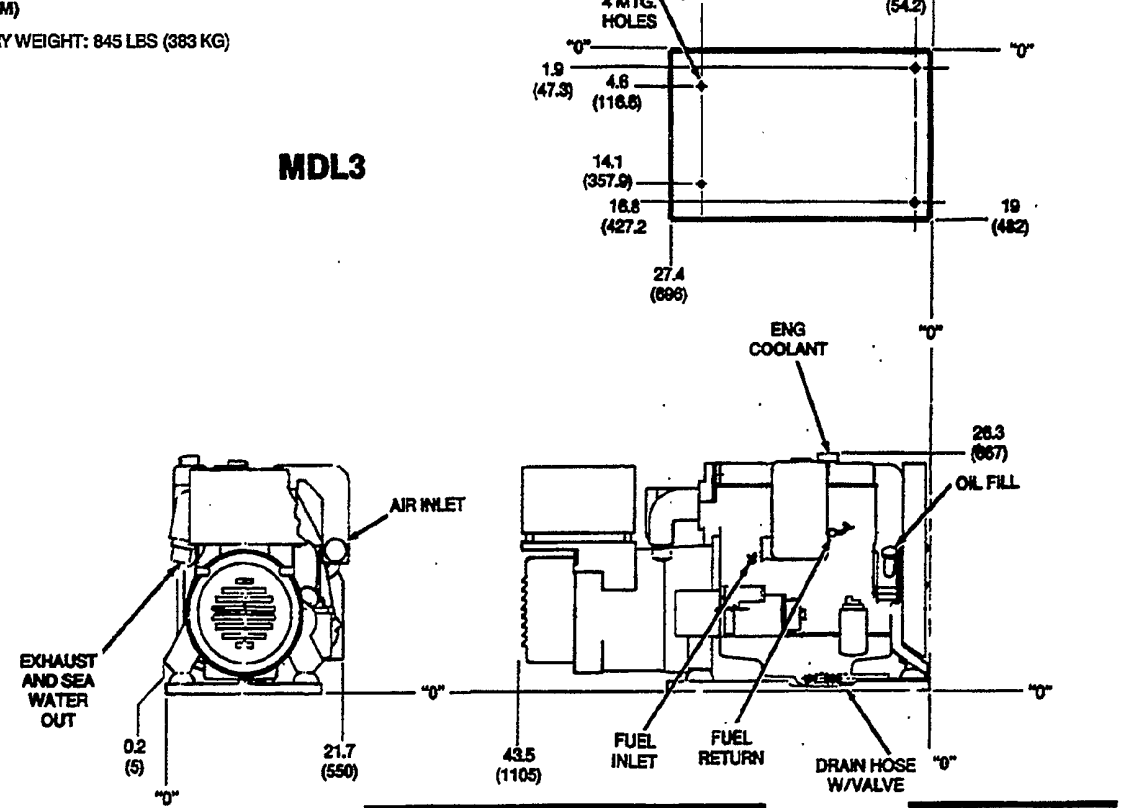

DIMENSIONS IN INCHES (MM)

DRY WEIGHT: 1025 LBS (465 KG)

MDL4

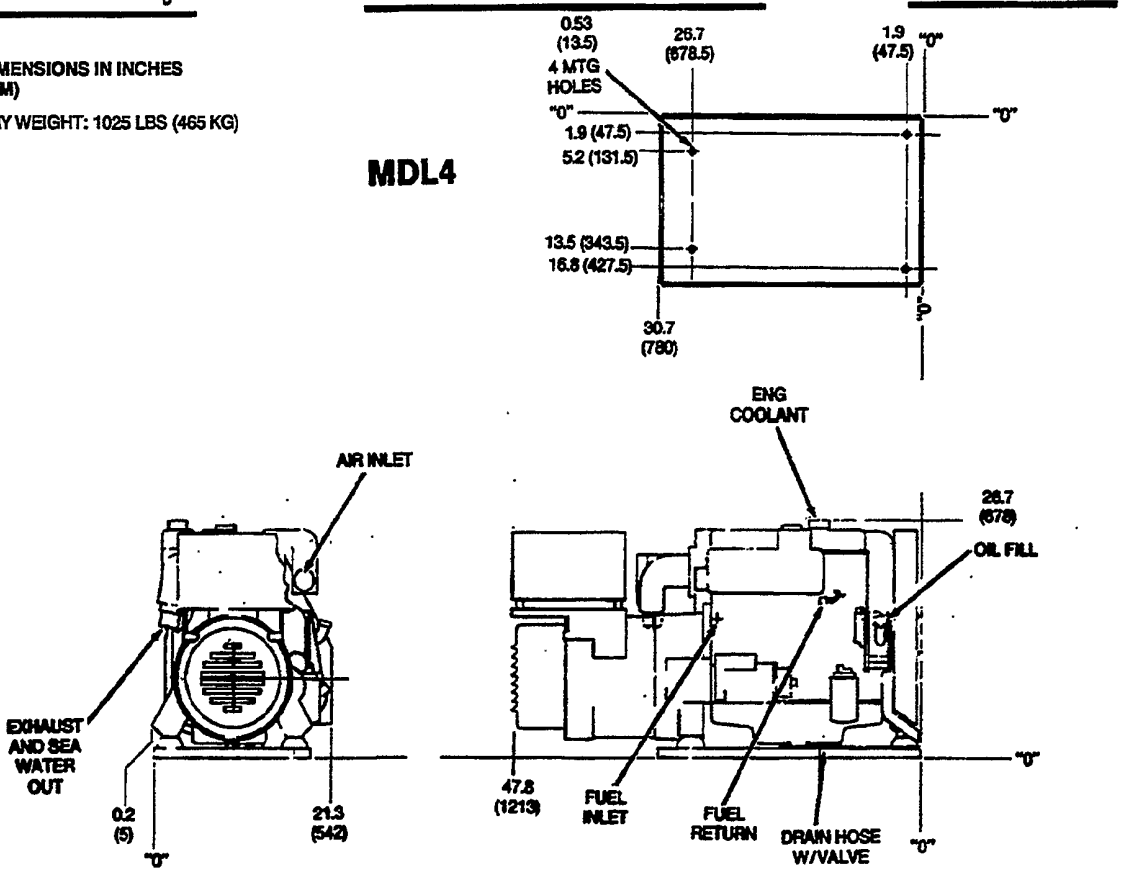

FIGURE 3-2A. GENSET DRIP PAN/OVERALL DIMENSIONS

Redistribution or publication of this document, by any means, is strictly prohibited.

DIMENSIONS IN INCHES
(MM)

DRY WEIGHT: 1309 LBS (594 KG)

MDL6

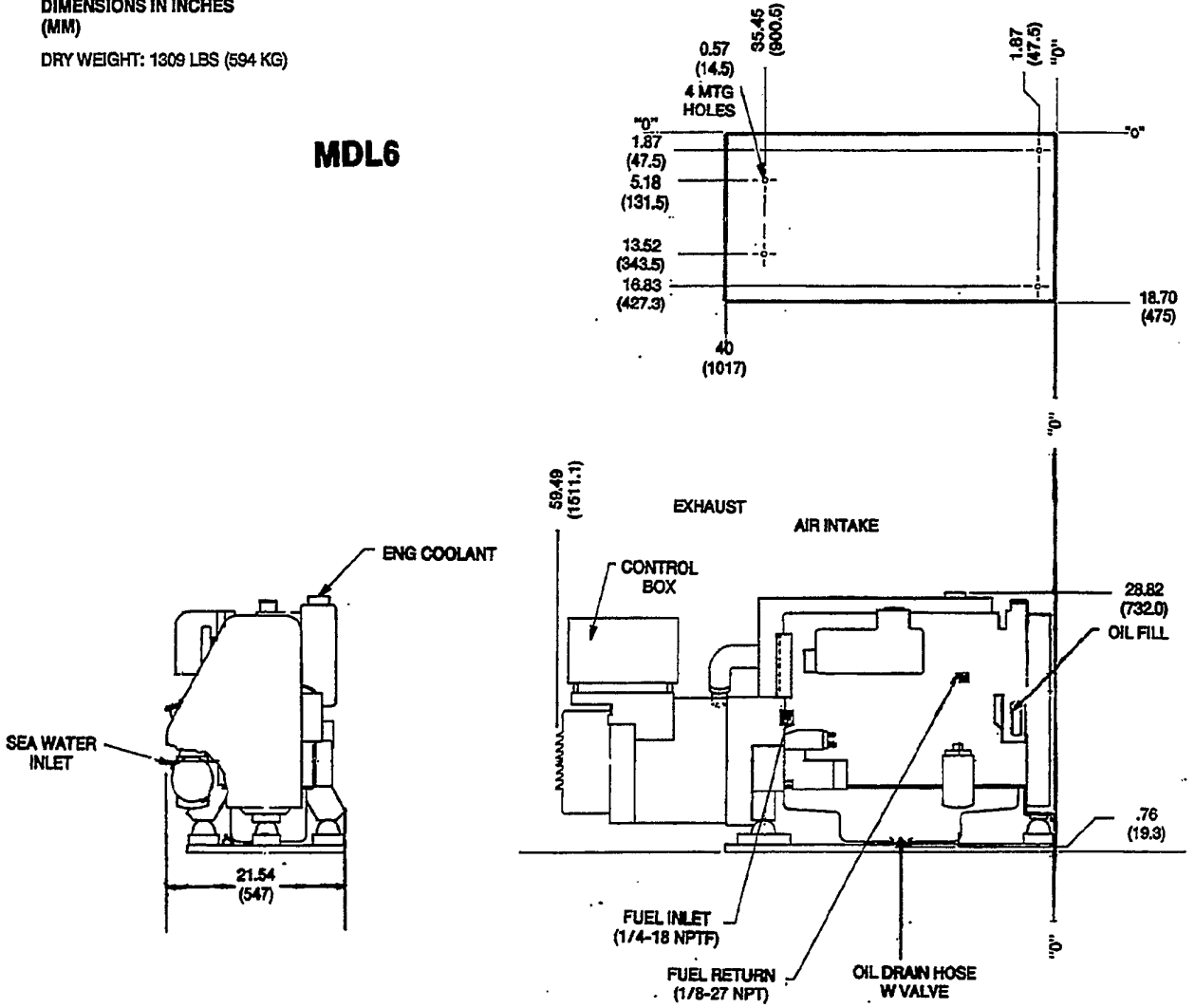

FIGURE 3-2B. GENSET DRIP PAN/OVERALL DIMENSIONS

Redistribution or publication of this document,
by any means, is strictly prohibited.

Redistribution or publication of this document,
by any means, is strictly prohibited.

GENERAL

Follow ABYC and NFPA ventilation installation guidelines pertaining to diesel-powered boats (see publication listing in the next column — ABYC and NFPA Requirements). Many requirements and recommendations found on this page are excerpts from these publications, but are not inclusive.

Marine diesel gensets must have air ventilation for three important reasons:

1. **To remove flammable or other harmful gases.** Because of diesel fuel characteristics and the closed nature of the engine fuel system, neither mechanical nor natural ventilation (as prescribed for gasoline powered vessels) is necessary to remove diesel fuel vapors. However, compartments containing storage batteries must be vented to provide for the escape of hydrogen in accordance with ABYC E-10, *"Location and Installation of Storage Batteries."*

2. **To provide air for engine combustion and generator cooling.** Provide ventilation to the compartment space for combustion air and generator cooling air. See Specifications (Section 2) for the total air requirements per model. Having a ventilation air capacity 1 1/2 to 2 times the minimum genset total air requirements is recommended.

   The ventilation openings may function as a means of providing natural ventilation. Power ventilation may be used in the compartment space for odor control and personnel comfort while providing maintenance or service to the genset, or other equipment.

3. **To control compartment temperature during genset operation.** This will avoid overheating which can result in shutdown, engine or control component damage, and power loss. For design purposes, the ambient temperature of the genset compartment is considered to be 122° F (50° C). As a general rule, the operating environment for a diesel marine genset should not exceed 160° F (71° C). While marine gensets can operate for periods at higher temperatures, maintaining a lower maximum will result in better performance and longer life. A power blower is often required to maintain lower temperatures when the genset is operating, especially when the boat is not moving.

The compartment must have air inlets and outlets to provide this air. Inlet ducts should have cowls or equivalent fittings of twice the area of the duct, larger if the opening is screened. Do not use recessed or flushed inlets, or louvered-transom outlets. Ventilation openings must be located to prevent entrance of water under maximum conditions of heel, trim, reverse operation, eccentric loading or wave action. The openings must not be closer than 15 inches (38 cm) from the diesel fill and vent fittings.

ABYC AND NFPA REQUIREMENTS

The installation of boat ventilation systems must meet all current ABYC and NFPA requirements pertaining to diesel-fueled boats. These requirements are covered in the following publications:

ABYC *"Standard and Recommended Practices For Small Craft"*, Section H-32 — Recommended Practices and Standards Covering Ventilation of Boats Using Diesel Fuel.

NFPA 302 *"Fire Protection Standard for Pleasure and Commercial Motor Craft"*, Chapter 2-2 — Ventilation.

The genset must have at least one ventilation air inlet and one outlet. To prevent movement of fumes between living quarters and any compartment containing an engine or its exhaust system, seal all cracks, feed-through holes, and conduit ends.

A carbon monoxide (CO) detector listed for marine use should be installed in the living quarters of the vessel. The many ventilation variables (such as wind shifts, boat in motion, at dockside where there can be exhaust gas from other vessels, etc.) make a CO detector an important accessory.

⚠WARNING ***Inhalation of exhaust gases can cause unconsciousness, personal injury, and death. Exhaust gases contain carbon monoxide — an odorless, colorless, and poisonous gas.***

Redistribution or publication of this document, by any means, is strictly prohibited.

Redistribution or publication of this document,
by any means, is strictly prohibited.

GENERAL

Throughout this manual, flotation water drawn into the boat for engine cooling is called *sea water*. Water recirculated through the closed system will be called *captive water*. Thus, confusion is avoided with other generic terms describing water origin and use.

The MDL-series gensets use heat exchanger cooling. The heat exchanger is an integral part of the engine cooling system and is covered on the following page.

System Plumbing

To adequately cool the genset under all conditions, the plumbing system must be properly planned and installed. Excess lengths of plumbing increases flow resistance and results in reduced cooling. An air leak in the sea water intake will reduce cooling, cause corrosion, and can even destroy the neoprene impeller in the sea water pump. The neoprene impeller must never be run dry, and the pump should be primed before initial startup of the genset.

The water line should have a minimum inside diameter of 1.0 inch (25.4 mm) for MDL3 and MDL4 models; 1.25 inch (31.7 mm) for the MDL6 model. For runs over 20 feet (5.2 m), increase the line one pipe size for each additional 10 feet (2.6 m) of length. Water lines can be either copper tubing or flexible hose. Be sure a length of flexible hose is used at the genset to allow for movement, and for noise abatement.

Because sea water cannot be relied upon to always be clean, Onan® recommends a water strainer or filter to protect the engine cooling system. See Figure 5-1.

Onan has a hull strainer (furnished with some muffler kits) that can be used with a flush through-hull fitting. The strainer (Figure 5-1), installed with the slots parallel to the keel, helps prevent pressure or vacuum when the boat is underway. Always use a flush-type inlet with a hydrodynamic marine muffler.

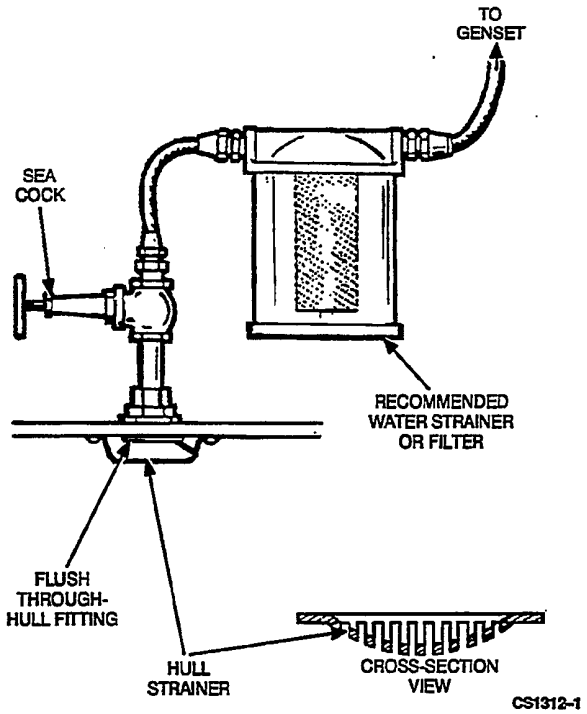

FIGURE 5-1. SEA WATER INLET

⚠CAUTION ***Restriction in the sea water inlet line can cause engine overheating and shutdown. The flush-type, through-hull water inlet must have an opening at least as large as the water inlet line.***

Stagger the genset water inlet so it is not directly in line with other inlets. Not doing so can reduce the amount of sea water available to the genset when underway and cause overheating. Never use scoop type water inlet fittings with a hydrodynamic muffler.

⚠CAUTION ***DO NOT USE SCOOP TYPE WATER INLET FITTINGS WITH A HYDRODYNAMIC MUFFLER. Forward facing scoops can develop sufficient ram pressure to force water past the generator set sea water pump. This can flood the exhaust system and the engine cylinders. This happens when the generator set is not running and the boat is underway. Rear facing scoops develop vacuum which can impede cooling water flow.***

Redistribution or publication of this document, by any means, is strictly prohibited.

This type of cooling system keeps sea water, and sediment deposits (salt, silt, etc.), away from the engine cooling jacket. As a result, the engine water jacket stays cleaner for optimum heat transfer. Figure 5-2 shows the flow direction of sea water and captive water.

The sea water pump constantly renews the water bath in the heat exchanger, and then dumps it into the exhaust elbow. The water flow cools the exhaust elbow, connecting hoses, and muffler in the exhaust system.

the heat exchanger, the hot captive water is piped through a bath of cool sea water. The cooled captive water returns to the pump and is recirculated.

The captive water temperature/flow rate is regulated by the thermostat. See Figure 5-2. The captive cooling system should always use a 50-50 mixture of ethylene glycol and distilled water to help prevent corrosion. See the Installation Checkout section for filling instructions.

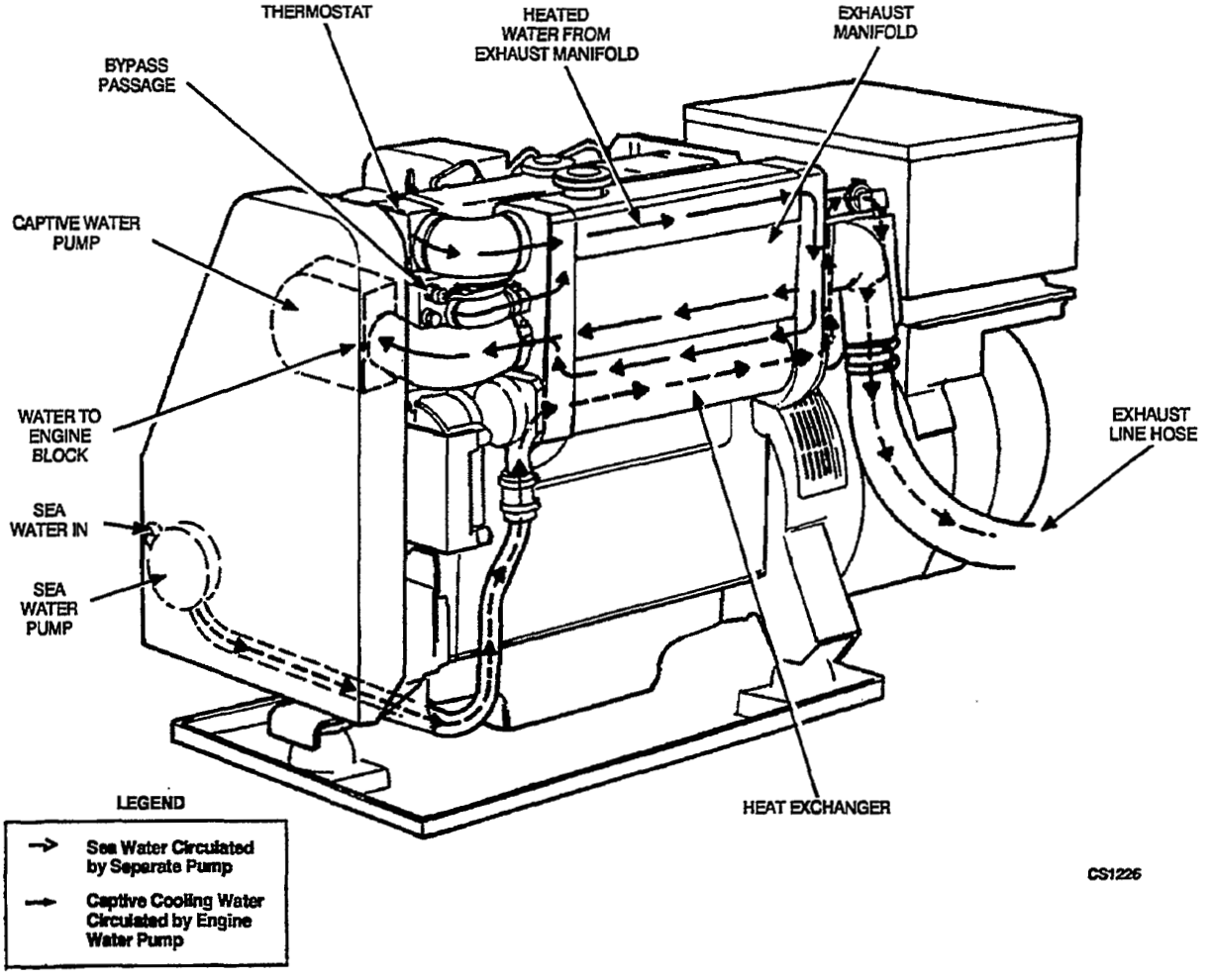

FIGURE 5-2. COOLANT FLOW, HEAT EXCHANGER COOLING SYSTEM

Redistribution or publication of this document, by any means, is strictly prohibited.

Onan does not recommend combining the genset cooling system with the propulsion engine cooling system. For the installer, this involves a great amount of experience and knowledge, as well as complete characteristics of both the genset and the propulsion engines.

⚠CAUTION ***Some propulsion engines use scoop-type water inlet fittings which must not be used on a generator set with a hydrodynamic muffler. When not operating, ram pressure may force water past the generator set's sea water pump and flood the exhaust system. From there it can flow back, flooding the engine cylinders and possibly the engine compartment.***

COOLING SYSTEM CHECK

Before initial operation, some cooling system checks must be performed. These are outlined in the following text.

Sea Water System

Before initial operation, the sea water pump should be primed. The water lubricates the neoprene impeller and prevents dry operation, especially on an above-waterline installation. Prime the pump by removing the inlet hose at the pump connection. Fill the pump with water and replace the hose. When the genset is started, check the exhaust outlet for delivery of water to the system. The flow should be about as listed in the Specifications section.

⚠CAUTION ***Do not operate the generator set if the cooling system is faulty. Doing so can result in damage to water-cooled exhaust system components and engine.***

Captive Water System

The genset has a high coolant-temperature shutdown switch. This switch can prevent engine damage only if the cooling system is kept clean and properly maintained. A coolant-recovery tank kit is supplied with the genset and must be installed per the enclosed instructions. Be sure the system is full of coolant, and the recov-

Use a 50-50 mixture of ethylene glycol and distilled water as an engine coolant—even when freezing temperatures are not expected. In addition to lowering the freezing point, it contains rust inhibitors that help prevent corrosion and scale.

⚠CAUTION ***Do not exceed a 50-50 mixture of ethylene glycol and water. A stronger mixture of ethylene glycol will alter heat transfer properties of the coolant.***

Filling the Cooling System

Verify that all drain cocks are closed, and all hose clamps secure. Remove the pressure cap on the heat exchanger and slowly fill the system with the recommended coolant.

Leave the pressure cap off the heat exchanger and start the genset. As trapped air is expelled from the system, the coolant level may drop and additional coolant can be added. Replace the pressure cap when coolant level is stable. Excess coolant will be expelled through the overflow hose and into the recovery tank.

Coolant Recovery Tank: Fill the recovery tank with coolant mixture to the COLD mark. Operate the genset until normal operating temperature is maintained as observed on the temperature gauge (option), or about 15 minutes of operation. Stop the genset and let it cool down. Add coolant into the recovery tank (if needed) to the COLD mark. The level should stabilize after several operation cycles.

⚠WARNING ***Contact with hot coolant can result in serious burns. Do not bleed hot, pressurized coolant from a closed cooling system.***

⚠CAUTION ***The high engine temperature switch will shut down the engine in an overheat condition only if coolant can contact the switch. Loss of coolant will allow engine to overheat without shutdown protection, thereby causing severe damage to the engine. It is imperative that adequate engine coolant levels be maintained for operation integrity of the cooling system and coolant shutdown protection.***

Redistribution or publication of this document, by any means, is strictly prohibited.

Redistribution or publication of this document,
by any means, is strictly prohibited.

GENERAL

Installation of two types of water-cooled exhaust systems are covered under separate headings. They are below-load waterline and above-load waterline.

All marine water-cooled exhaust systems must meet ABYC *"Standard and Recommended Practices For Small Craft"*, and NFPA 302 *"Fire Protection Standard For Pleasure and Commercial Motor Craft."* Many requirements and recommendations in this section are excerpts from these publications, but are not inclusive. Installations must meet each of the following requirements:

⚠WARNING ***Failure to meet these requirements and any applicable codes can result in severe property damage, personal injury or death.***

- The entire exhaust system must be accessible so a periodic visual and audible leakage-check can be done by the operator.
- The exhaust system must be water cooled, and the water injected as near to the genset as possible.
- The exhaust line must be installed to prevent backflow of water to the engine under all conditions; and the exhaust system outlet must be above the load waterline. Water backflow into the engine will damage it.
- The genset exhaust system must not be combined with the exhaust system of another engine.
- A flexible section of marine exhaust hose must be used near the engine to allow for engine movement and vibration during operation. All exhaust system hoses must be CERTIFIED for marine exhaust use.
- The exhaust system must be of sufficient size to prevent excessive back pressure. See Back Pressure data in this section.
- Make sure all sink, shower or other cabin drains are properly trapped to prevent entrance of exhaust gas.

⚠CAUTION ***Backflow of water can cause severe engine damage and possible flooding of the boat. Make sure the hose from the exhaust manifold to the muffler slopes a minimum of 1/2 inch per linear foot (42 mm/m). An uphill section between the exhaust manifold and muffler can cause backflow of water and is not permissible — NO EXCEPTIONS.***

Be sure that the vertical rise of the exhaust hose measured from the bottom of the muffler to its peak is not more than 48 inches (1.2 m) as shown in Figures 6-1 and 6-2. The vertical rise must not slope — it must be vertical in relation to the base of the hydrodynamic muffler.

The exhaust tubing (between the exhaust elbow and muffler, and between the top of the vertical fitting and hull outlet) on both above and below load-waterline installations must be pitched downward at a minimum downgrade of 1/2 inch per linear foot (42 mm/m). There must also be a 12-inch (305 mm) minimum drop in the hose at these locations — level sections, dips or rises are not allowed.

Provide adequate support for long hose lengths to prevent sagging, bending, and formation of water pockets. The use of automotive-type pipe hangers will help stop noise transmission to the boat hull.

Allow space between the marine muffler and its mounting surface by using spacers under the mounting flanges. This allows air circulation under the muffler and discourages condensation.

Material

Use material recommended in publication by ABYC-P1. The exhaust line must be at least as large as the engine exhaust manifold outlet. See the following section heading on Back Pressure.

⚠WARNING ***Exhaust gas contains carbon monoxide, an odorless, colorless, highly-poisonous gas that presents the hazard of severe personal injury or death. Place special emphasis on the following:***

- ***Be sure the flexible exhaust hose is designed and certified for marine exhaust-line use.***
- ***Use two clamps at each end of all flexible exhaust hose connections.***
- ***Do not make sharp bends in the exhaust hose.***
- ***Position exhaust outlet to prevent backflow of exhaust gases into the vessel.***

Use flexible hose designed and CERTIFIED for marine exhaust-line use to ease installation, and for flexibility. The muffler must be at the lowest point of the entire exhaust system. The muffler inlet should be at least 12 inches (305 mm) below the engine exhaust manifold outlet. If this distance is less, backflow of water toward the manifold is more likely.

Use two clamps at each end of exhaust hoses as shown in Figures 6-1 and 6-2. The clamps must be corrosion resistant metal, and a minimum of 1/2 inch (12.7 mm) wide. They should be spaced at least one clamp-width apart, and at least one clamp-width from the end of the hose. Clamps depending solely on spring tension must not be used.

Redistribution or publication of this document, by any means, is strictly prohibited.

Exhaust back pressure is an important measure of an adequate exhaust system. If the exhaust installation requires a long run of pipe (more than 30 feet [9 m] overall), back pressure should be checked. Exhaust back pressure of the genset should not exceed 3.0 inches (76 mm) of mercury (10 kPa).

Increase the exhaust pipe diameter from the muffler to the hull outlet one standard pipe size for every 10 feet (3 m) beyond 30 feet (9 m) of overall length.

Exhaust Cooling Water Injection

The neoprene impeller pump moves the sea water through the cooling system and into the exhaust manifold. The injected water cools the exhaust and prevents exhaust system damage. A temperature operated switch on the exhaust manifold shuts down the genset if overheating occurs. The switch closes if temperature reaches 185° to 195° F (85° to 91° C) and actuates the Fault Reset breaker on the control panel.

If high exhaust-temperature shutdown occurs, the entire exhaust system should be checked for any signs of overheating, especially the exhaust hoses. Replace defective components immediately, and do not operate the genset until the system is repaired.

⚠WARNING ***Inhalation of exhaust gas can cause severe personal injury or death. Do not operate the generator set after a high exhaust temperature shutdown until the entire exhaust system has been checked and serviced as required.***

⚠WARNING ***DO NOT USE SCOOP TYPE WATER INLET FITTINGS. Forward facing scoops can develop sufficient ram pressure to force water past the generator set's sea water pump. This can flood the exhaust system and the engine cylinders. This happens when the generator set is not running and the boat is underway. Rear facing scoops develop vacuum which can impede cooling water flow.***

Figure 6-1 shows details of a recommended below load-waterline installation. Review and apply data from the preceding General section (page 6-1), plus the following.

Siphon Break

Install a siphon break (anti-siphon) if the sea water injection port on the exhaust manifold is at or below load-waterline. The siphon break is a vacuum-operated vent valve that opens the exhaust water discharge line to the atmosphere when the engine is not operating. The open vent valve prevents sea water from being siphoned into the exhaust manifold and engine cylinders.

The siphon break hoses connect between the exhaust manifold water-injection port and the manifold water outlet. Connect the siphon break hose ends to these connectors.

Locate the siphon break in a vertical position at least 12 inches (305 mm) above the load-waterline. See Figure 6-1. Remote mounting is permissible within a 5 foot (1.5 m) radius of the injection port. The vertical position and height of the valve must be maintained.

The siphon break must be mounted vertically with the hose fitting pointing down. Use pipe strap material to secure the assembly to the frame or bulkhead. Be sure the slotted-opening in the siphon break valve is open to atmospheric pressure. The valve will not function if the opening is closed in any way.

⚠CAUTION ***Failure to use a siphon break when the exhaust manifold injection-port is at or below the load-waterline will result in sea water damage to the engine, and possible flooding of the boat.***

Redistribution or publication of this document, by any means, is strictly prohibited.

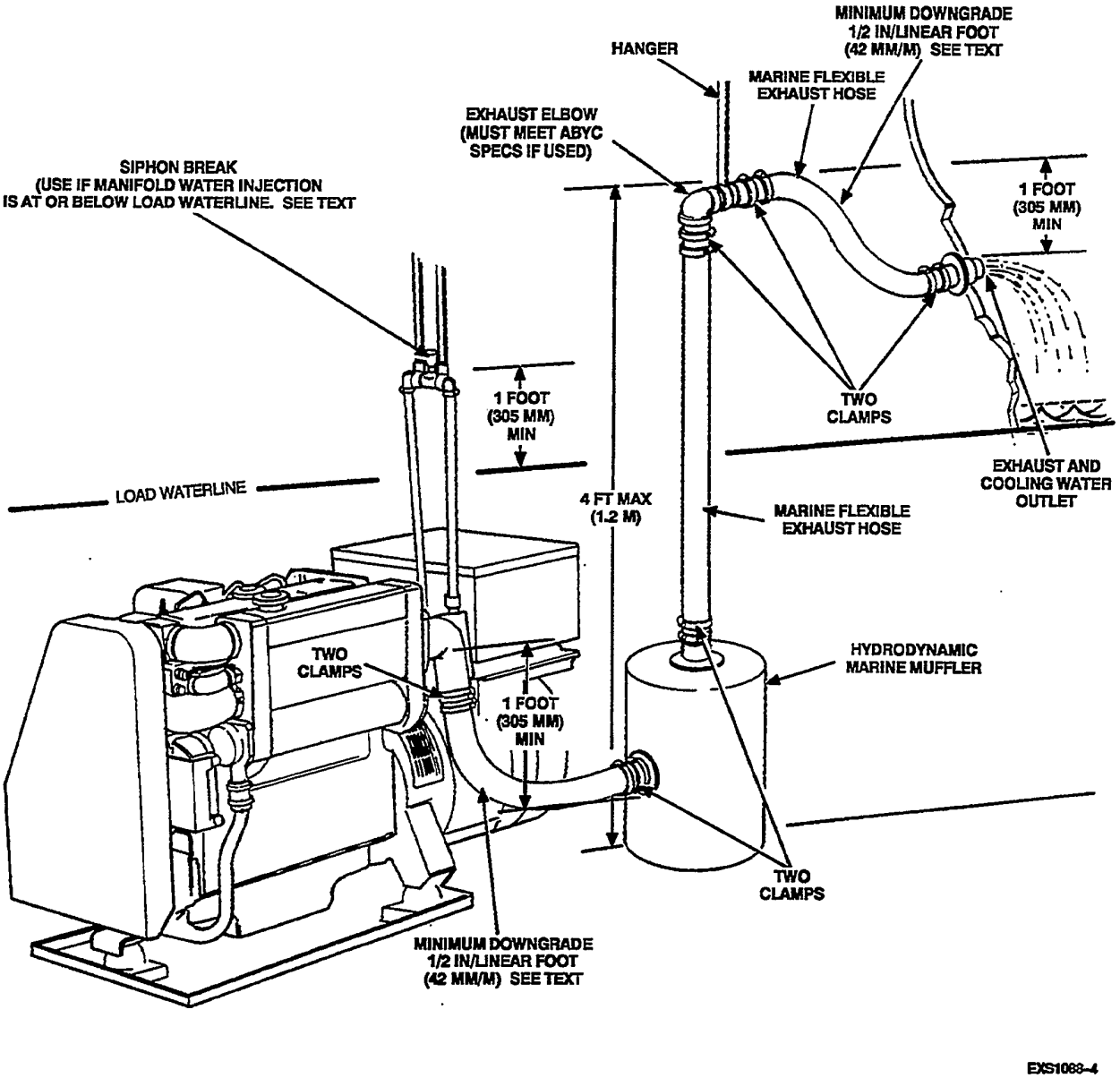

FIGURE 6-1. BELOW LOAD-WATERLINE INSTALLATION

Redistribution or publication of this document,
by any means, is strictly prohibited.

Figure 6-2 shows a recommended above load-waterline installation. A siphon break valve is not required with this downward pitch of exhaust runs are applied, and that all hose end connections have two clamps as shown.

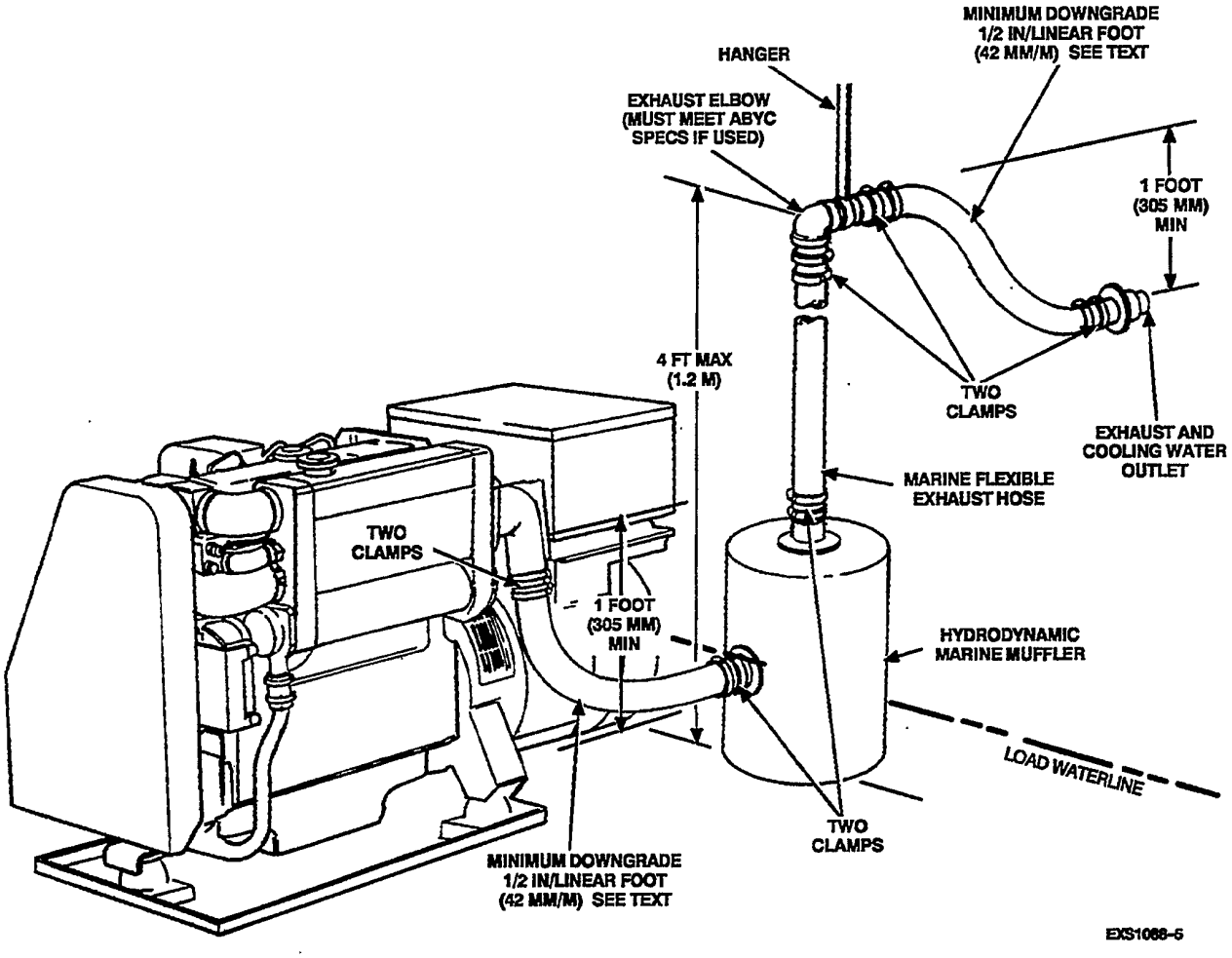

FIGURE 6-2. ABOVE LOAD-WATERLINE INSTALLATION

Redistribution or publication of this document,
by any means, is strictly prohibited.

GENERAL

The diesel fuel system installation must meet all current ABYC and NFPA requirements. These requrements are covered in the following publications:

ABYC *"Standard and Recommended Practices For Small Craft"*, Project H-33 — Diesel Fuel Systems.

NFPA 302 *"Fire Protection Standard for Pleasure and Commercial Motor Craft"* Chapter 5 — Fuel Systems.

Many requirements and recommendations found in this section are excerpts from these publications, but are not inclusive.

In all diesel engine installations, fuel system cleanliness is of utmost importance. Make every effort to prevent entrance of dirt, moisture, or other contaminants. Carefully clean all diesel fuel system components before installation and putting the genset into operation.

⚠CAUTION ***Dirt or water in the fuel system is the major cause of diesel engine failure. A tiny piece of dirt, or a few drops of water in the injection system can stop the genset.***

⚠WARNING ***Fuel leakage in boats presents fire and explosion hazards that can result in severe personal injury or death. For this reason, it is important that the material, design, construction and installation of all fuel system components meet the highest possible standards. Use only products specified for marine application.***

If the propulsion engine uses diesel fuel, it is possible to use the same fuel tank for the genset. However, before that decision is made, the following factors must be considered:

- Adequate fuel capacity for both engines. See Specifications section for genset requirements.
- The fuel returned to the tank after cooling the injectors is warm. To obtain maximum engine efficiency, fuel delivered to the injectors must be cool. The fuel tank volume must be adequate to cool the returned fuel.
- Distance of tank from the genset. Fuel lift and restrictions to the fuel transfer pump should not allow suction to exceed 2.5 psi (17 kPa) at the pump inlet. The transfer pump maximum lift is 6 feet (1.8 m). If these values are exceeded, either an additional fuel pump or separate tank will be required.

FUEL LINES

Make sure all fuel lines are properly supported and connections tightened securely. The line should be supported throughout its length with clips or straps spaced no more than 14 inches (355 mm). Use an approved pipe-joint compound acceptable for use with diesel fuel at all thread fittings. Fuel distribution lines must have as few connections as practicable, and be protected against mechanical injury and vibration.

If a metallic fuel line is run into the genset compartment, a length of flexible hose must be installed to withstand genset vibration. The flexible fuel hose must meet USCG requirement 33CFR183.558 and be stamped "USCG TYPE A". There cannot be an electrical connection (such as braid reinforcement) between the hose end fittings. A bad ground in the cranking circuit will cause a braid-reinforced hose to become hot, and ignite the fuel during cranking.

⚠WARNING ***Ignition of fuel can cause fire and severe personal injury or death. Be sure the flexible section of fuel line used at the generator set meets USCG requirement 33CFR183.558 and is stamped "USCG TYPE A".***

⚠WARNING ***Leakage of fuel in or around the generator set compartment presents a hazard of fire or explosion and can cause severe personal injury or death. Do not permit any flame, spark, cigarette, pilot light, arcing equipment, or other ignition source near the generator set. The ventilation system must provide a constant flow of air to safely expel all fuel vapors.***

Redistribution or publication of this document, by any means, is strictly prohibited.

siphoning. See Figure 7-1. A separate fuel line is recommended for the genset as shown.

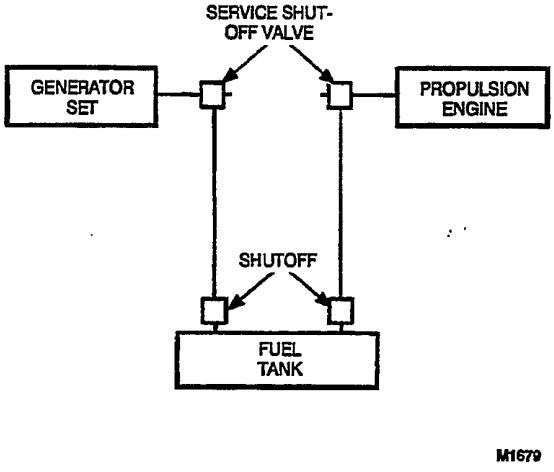

FIGURE 7-1. INSTALLATION ABOVE TANK LEVEL

If a fuel tank is shared, a fuel line tee is not recommended. A tee can cause erratic genset operation due to fuel starvation. The genset's fuel pump does not have the capacity to overcome the draw of the propulsion-engine fuel pump.

This is true also of the return lines. Pressure from one engine could be higher than the other and force return fuel back into the lower-pressure engine injector. Maximum back pressure at the injector fuel return line fitting, shown in Figure 7-2, should not exceed 5 psi (34 kPa) at rated speed and power. This pressure is a function of fuel flow rate, tank height, line size and length. The return line should enter the tank as far as possible from the supply lines to allow fuel mixing and cooling.

⚠CAUTION ***Never use galvanized or copper fuel lines, fittings or fuel tanks with diesel fuel systems. Condensation in the tank and lines combines with the sulfur in diesel fuel to produce sulfuric acid. The molecular structure of the copper or galvanized lines or tanks reacts with the acid and contaminates the fuel.***

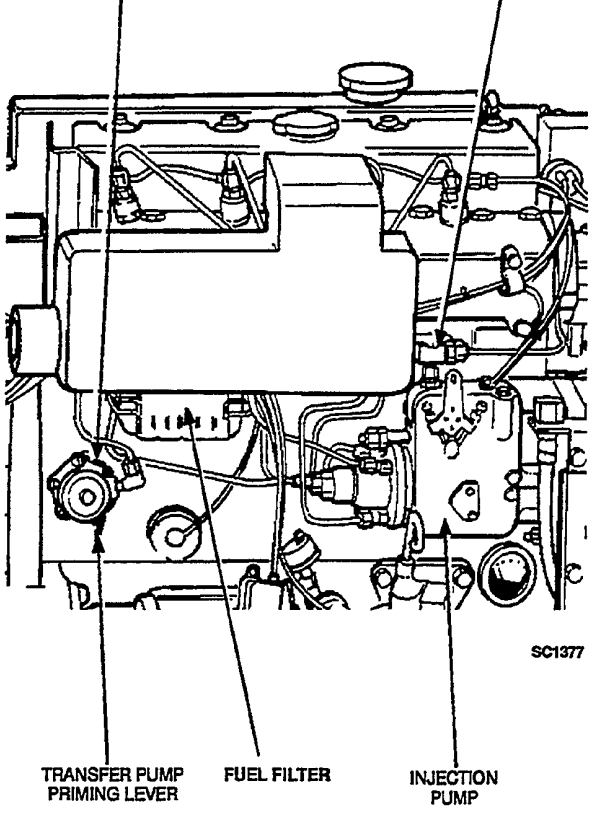

FIGURE 7-2. ENGINE FUEL SYSTEM COMPONENTS

If the fuel tank fitting is large enough, a second, shorter dip tube may be installed as shown in Figure 7-3. The required fittings can be built by a machine shop. Install an anti-siphon device at the tank fitting as shown.

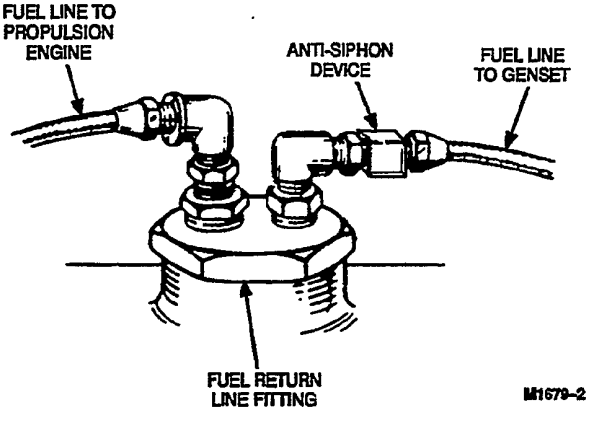

FIGURE 7-3. TWO FUEL LINES IN TANK FITTING

If the tank does not have an unused outlet, a new outlet can be installed. The metal tank must be removed to braze or weld a new outlet fitting. This procedure re-

Redistribution or publication of this document, by any means, is strictly prohibited.

⚠WARNING ***Ignition of fuel vapors can cause severe personal injury or death. Welding a fuel tank, empty or not, is extremely dangerous! Vapors may ignite causing an explosion and fire. Have welding done only by experienced personnel.***

SIPHON PROTECTION

When the fuel tank is installed above the engine level, an anti-siphon device is needed to prevent siphoning if the line breaks below the fuel level. See Figure 7-4. This device is installed at the tank withdrawal fitting, or at a location where the line from the tank will no longer remain above the fuel tank top level. The device can be either a mechanical check valve, or an electric valve with mechanical override. The electric valve is connected to open only when the engine fuel solenoid is on.

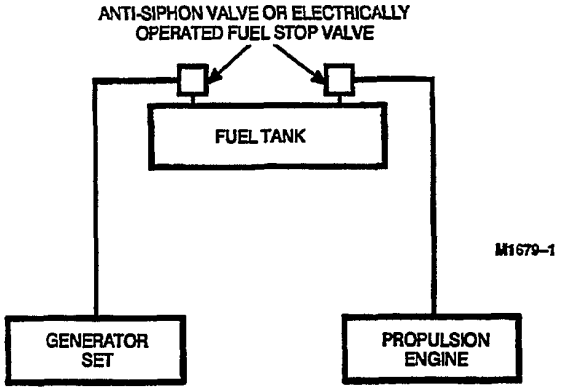

FIGURE 7-4. SIPHON PROTECTION

FUEL TANKS

A valve must be installed directly at the tank connection to shut off fuel flow. This valve may be electrically or manually operated. If electrically operated, it must be energized only during engine operation, and have a manual override to comply with USCG regulations. This valve can be purchased from Onan, and is listed in the parts manual.

The manual valve must have an arrangement for operation outside the compartment in which the tank is located, preferable from above deck.

A USCG approved service shutoff valve must be installed at the engine end of the fuel line under conditions listed below. This valve stops the fuel flow if the genset is serviced.

- When fuel tanks are located in a compartment other than the engine.

If the propulsion engines and genset use different fuels, a separate fuel tank is required. Use only an approved tank designed for marine application. Be sure that the compartment is well ventilated (see Ventilation section). Fuel consumption data in the Specifications section is useful for determining the tank size.

When installing a separate tank, locate it close as possible to the genset compartment. Be sure it is accessible and can be removed for inspection.

⚠CAUTION ***Fuel starvation can cause marginal operation of the generator set. Fiberglass fuel tanks can present a problem if the fuel pickup tube is too close to the tank bottom. Fiberglass fibers can settle and form a mat with time. Make a diagonal cut on the bottom of the pickup tube and install 1/2 to 2 inches (13 to 51 mm) from the tank bottom.***

Mount the fuel tank and secure into position. The NFPA recommends that flat bottom tanks be installed on slatted wooden platforms to help prevent moisture condensation. Cylindrical tanks should be set in chocks or cradles and securely fastened.

Small fuel tanks can be suspended from deck beams. Support and brace the tank to prevent movement. Line up braces with the tank internal baffle plates. Insulate all wood or metal surfaces from the tank surface with a non-abrasive and non-absorbent material. Heavy rubber-impregnated cotton fabric or oil- and acid-resistant plastics work well.

⚠WARNING ***Ignition of fuel when filling the tank can result in severe personal injury or death. All metallic fuel tanks MUST be electrically bonded to the boat common ground. Also bond the filler neck or opening to the tank if a hose is used between them. This helps prevent static spark when filling that can ignite the fuel.***

Position the tank fill and vent pipes so fuel or vapor cannot escape into the bilge. Run the vent and fill pipes from separate openings in the tank. If the fill pipe has a flexible section of fuel hose, install a separate grounding wire between the deck fuel plate and tank. Install the vent opening as far from other hull opening as possible, and with a gooseneck so water cannot enter. Install a flame arrester on the vent opening.

FUEL SYSTEM TEST

After installation, test the fuel system for leakage per ABYC H-33.5. Any leak must be found and corrected before putting the fuel system into service.

Redistribution or publication of this document, by any means, is strictly prohibited.

Redistribution or publication of this document,
by any means, is strictly prohibited.

GENERAL

Installing the genset electrical system includes installing line circuit breakers, connecting the load, installing the remote start control (if used), and connecting the battery. The battery must always be connected last to avoid accidental genset starting during the installation.

⚠WARNING ***Accidental starting of the generator set during installation creates a hazard of serious personal injury or death. Do not connect the starting battery until instructed.***

Have all wiring installed by a qualified electrician. Wiring diagrams do not include customer-added components.

The wiring must meet ABYC *"Standard and Recommended Practices For Small Craft"* and NFPA 302 *"Fire Protection Standard for Pleasure and Commercial Motor Craft"* requirements, and all other applicable codes. The requirements and recommendations found in this section are excerpts from these publications, but are not inclusive.

Be sure to seal all openings made for wiring so exhaust or fuel vapors cannot enter the living quarters. If flexible-metal conduit is used, it must be sealed internally at the end where it terminates within the junction box or panelboard. Flexible-metal conduit is not vapor-tight along its length due to its unique construction.

⚠WARNING ***Inhalation of exhaust gas or ignition of fuel vapor can cause severe personal injury or death. Be sure to vapor-seal flexible metal conduit, and all openings made during installation of the generator set, with a silicone/rubber-based sealant.***

⚠WARNING ***Faulty electrical equipment can cause shock and severe personal injury or death. Use only approved power supply assemblies, and never remove the grounding pin from the power cord. No ground, or an incorrect ground, can cause the vessel to become electrically "hot".***

LOAD CONNECTIONS

Line Circuit Breaker

A line circuit breaker must be installed to protect the generator from short circuit or other overloads. When supplied by Onan, they mount on the side of the control box. Other breakers must meet code specifications to properly protect the generator.

Use a section of flexible conduit at the genset to absorb movement and vibration. Flexible, multi-strand wire must be used throughout to reduce the danger of breakage due to boat movement or vibration. Grounding must comply with wiring codes.

⚠WARNING ***Contact with electrically "hot" equipment can result in severe personal injury or death. It is extremely important that bonding and equipment grounding be properly done. All metallic parts which could become energized under abnormal conditions must be properly grounded.***

⚠WARNING ***Improper wiring can result in fire and severe personal injury or death. Do not connect electrical wiring to the fuel line.***

Non-Reconnectable Generators

The single-phase 120, 120/240-volt (115, 115/230-volt), two- and three-wire connections are shown on the AC wiring and schematic diagrams, Figure 8-2. These generators are transformer regulated as shown. The load leads are connected to the load circuit breaker.

When output is taken from two generator windings (such as 120/240 volts), the 120-volt loads must be balanced across the windings. Taking full load from one winding can cause poor voltage regulation and damage to the equipment or generator. A 220-, 230- or 240-volt load is connected across both windings. The load circuit breaker must be sized to the AC output current.

International 50 hertz or 60 hertz generators can be connected for 2-wire, 220-, 230-, or 240-volt, single-phase output. This is done by grounding lead L2, and lifting and insulating (by electrical tape or isolation terminal) lead L0 on transformer-regulated generators. In these connections, only the hot lead L1 is connected through the breaker trip; and lead L2 is connected directly to ground (not through the breaker trip). See the reconnection diagrams in Figure 8-5.

Reconnectable Generators

Reconnectable, multi-lead generators have wide ranges of single- or three-phase voltages. These generators have electronic regulation. The connections are shown on the AC wiring and schematic diagram, Figures 8-4 and 8-5. The line circuit breaker must be sized to the AC output current and meet code specifications.

Redistribution or publication of this document, by any means, is strictly prohibited.

While at dock, most boats have a dockside connector for use of commercial power. These installations must have a positive-off switching device to isolate the genset and genset and commercial power to be connected together, nor permit arc-over between them. Use either a manual switch or a shoreline power transfer switch of the proper rating in accordance with ABYC E-8.4. See Figure 8-1.

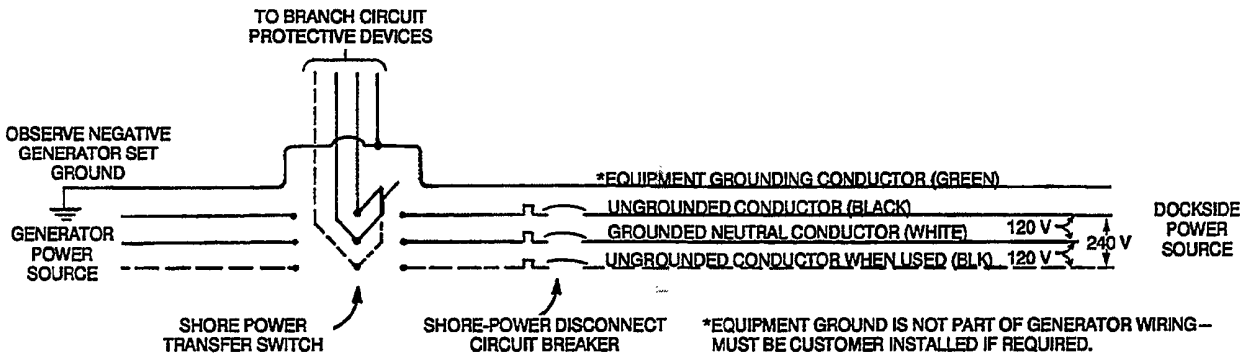

FIGURE 8-1. SHORELINE POWER TRANSFER SWITCH

Redistribution or publication of this document, by any means, is strictly prohibited.

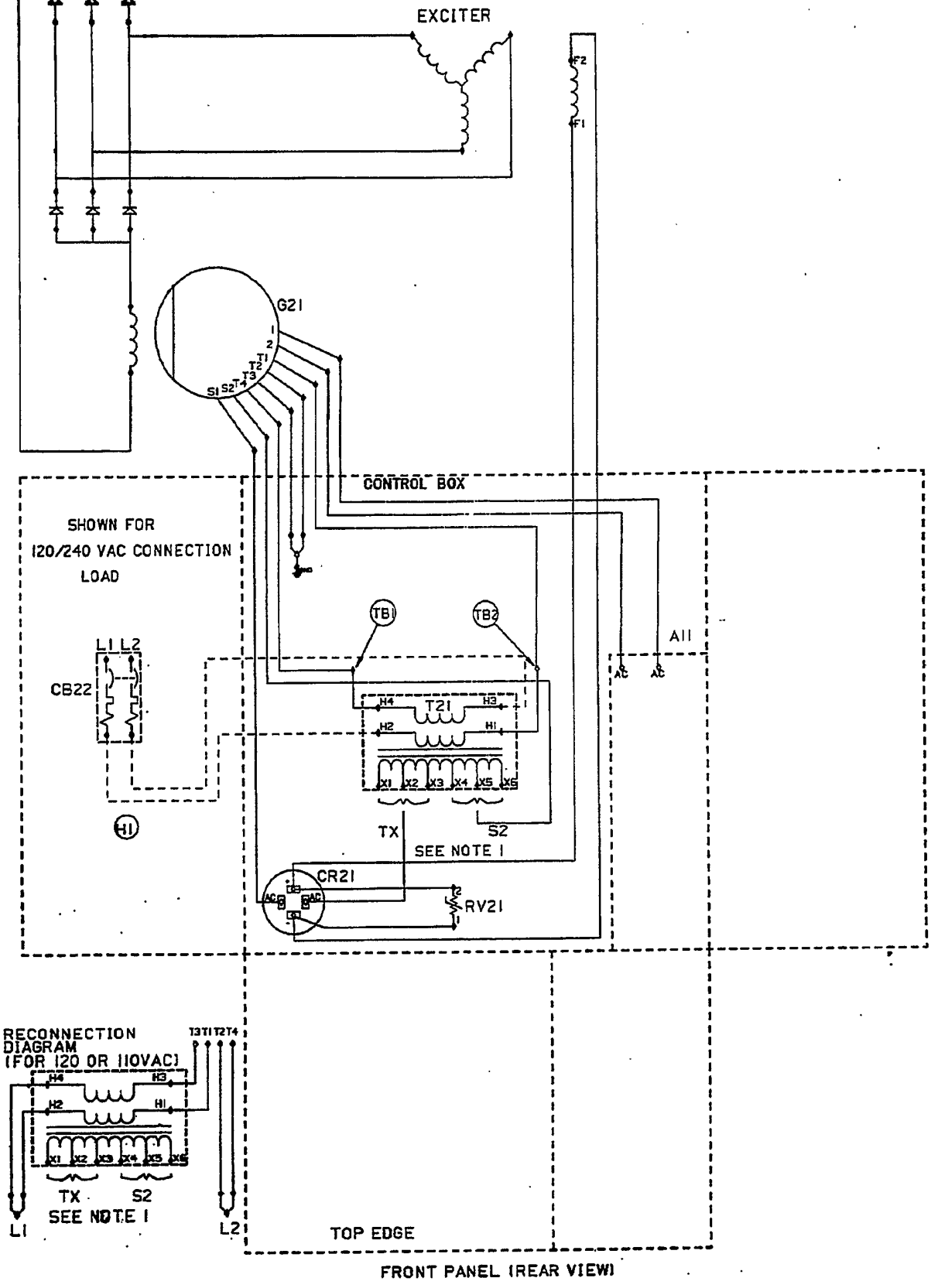

FIGURE 8-2. AC WIRING DIAGRAM, SINGLE-PHASE, TRANSFORMER REGULATION (PG. 1 OF 2)

Redistribution or publication of this document,
by any means, is strictly prohibited.

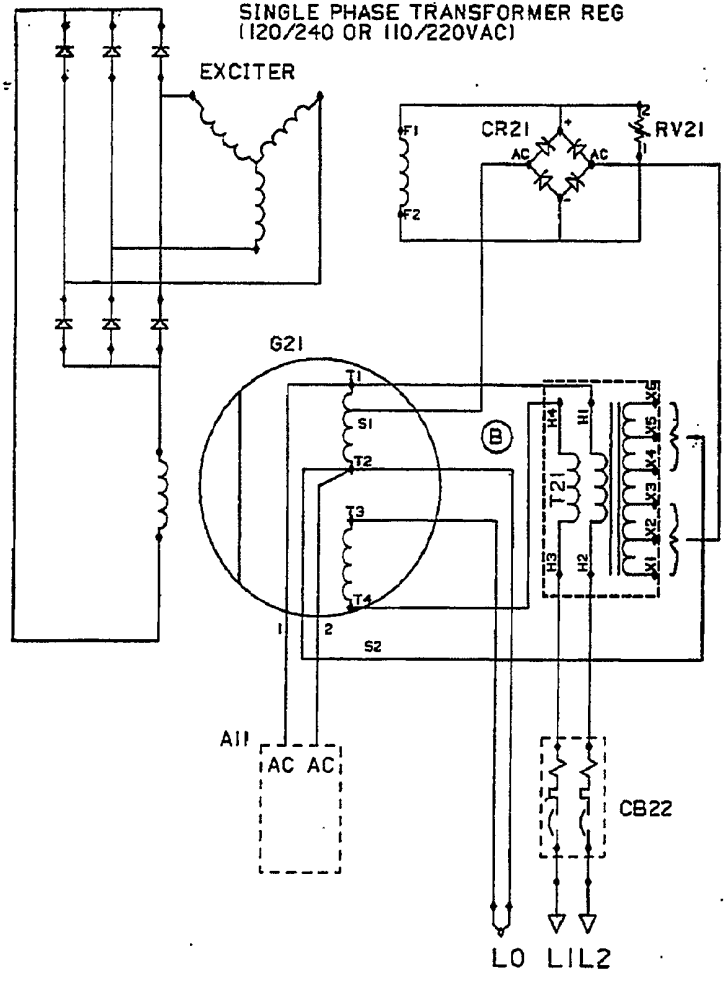

COMPONENT IDENTIFICATION

REF DES	DESCRIPTION
A11	PCB Ass'y, Engine Monitor
CB22	Circuit Breaker, Load
CR21	Bridge Rectifier
G21	Generator, Ac
RV21	Suppressor Ass'y
TB1, 2	Standoff Insulator
T21	Transformer, Regulation

NOTES:

1. **TO ADJUST OUTPUT VOLTAGE, MOVE TAPS ON T21 ACCORDING TO CHART BELOW.**
2. **UNLESS OTHERWISE NOTED, ALL COMPONENTS ARE SHOWN IN THE DE-ENERGIZED POSITION.**
3. **DASHED LINES INDICATE WHEN USED.**

DASH NO.	MODEL NO.
-01	60 HZ (MDL4)
-02	50 HZ (MDL4)
-03	60 HZ (MDL3)
-04	60 HZ (MDL6
-05, -07 ...	50 HZ (MDL6)
-06	60 HZ (12.5 MDL3)

STANDARD TAP POSITION BY DASH NO.	TAP POSITION		OUTPUT VOLTAGE ADJUSTMENT
	TX	S2	
	X3	X4	↑
	X2	X4	
	X1	X4	
-03,-06,-07 (110/220)	X3	X5	
-04	X2	X5	INCREASE
-01,-05 (120/240)	X1	X5	
	X3	X6	DECREASE
-02	X2	X6	
	X1	X6	↓

FIGURE 8-3. AC SCHEMATIC DIAGRAM, SINGLE-PHASE, TRANSFORMER REGULATION (PG. 2 OF 2)

Redistribution or publication of this document, by any means, is strictly prohibited.

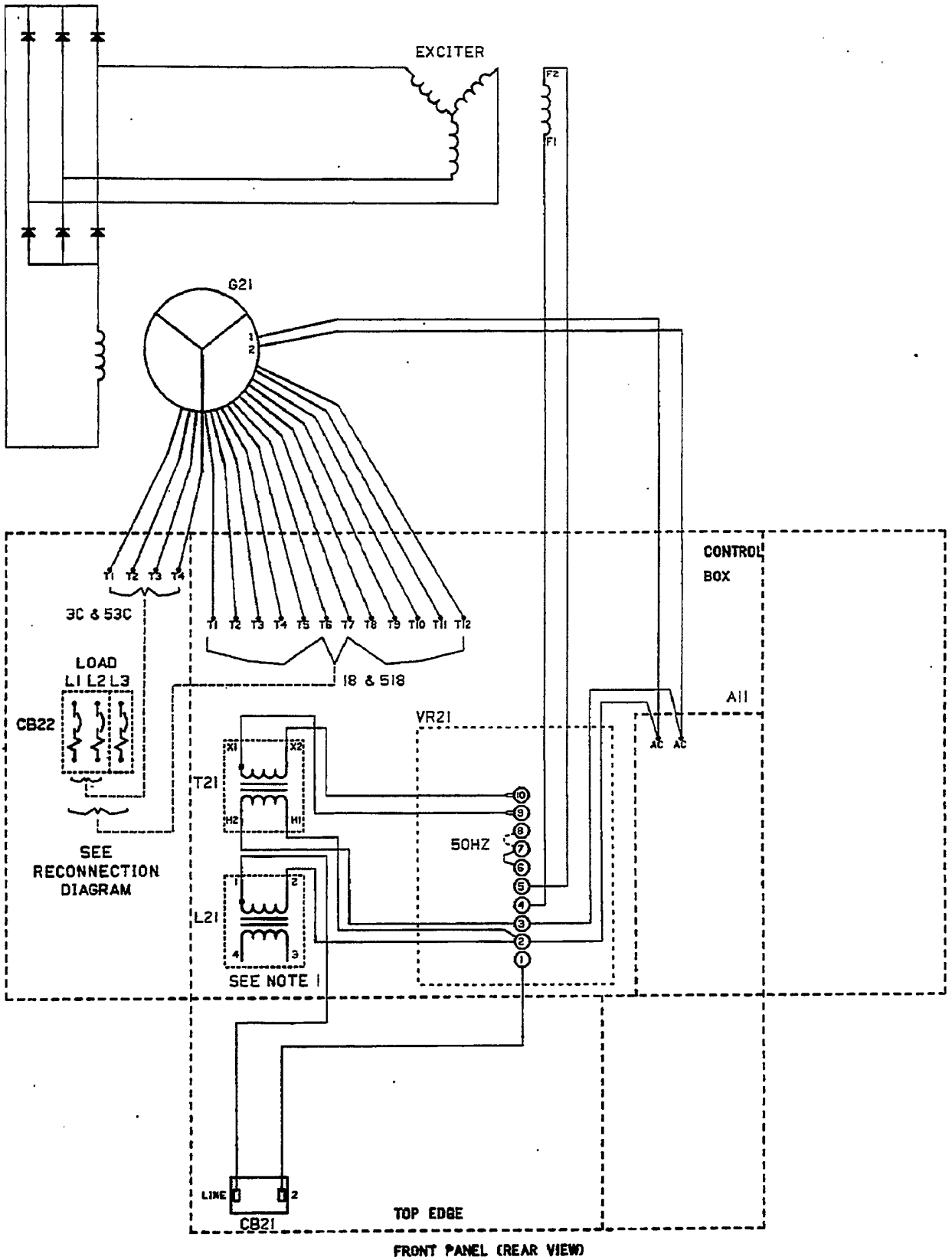

FIGURE 8-4. AC WIRING DIAGRAM, SINGLE- AND THREE-PHASE, ELECTRONIC REGULATION (PG. 1 OF 2)

Redistribution or publication of this document,
by any means, is strictly prohibited.

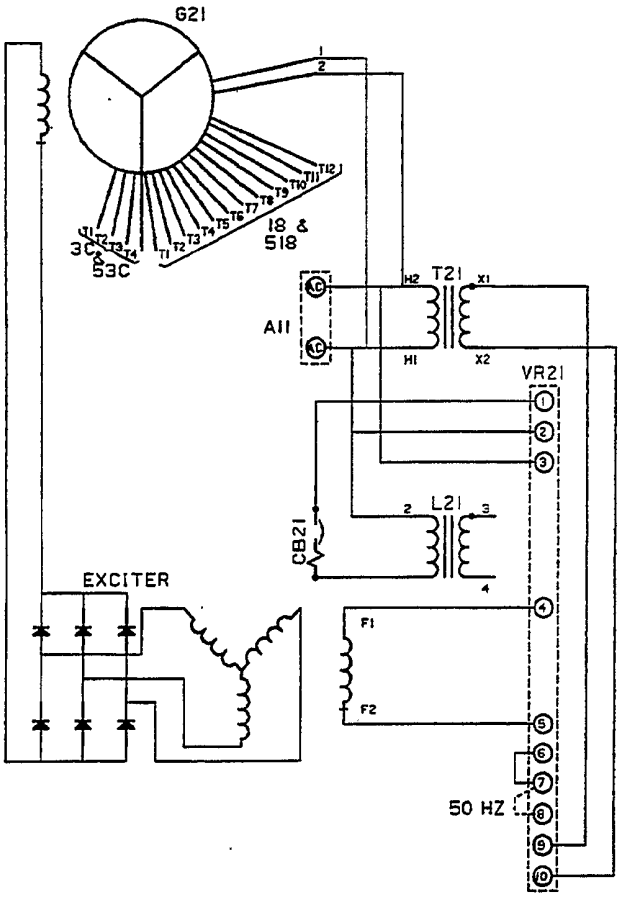

COMPONENT IDENTIFICATION

REF DES	DESCRIPTION
A11	PCB Ass'y, Engine Monitor
CB21	Circuit Breaker, 3 Ampere
CB22	Circuit Breaker, Load
G21	Generator, AC
L21	Reactor Assembly
T21	Transformer, Voltage Ref.
VR21	Voltage Regulator Assembly

NOTES:

1. **CUT LEADS 3 AND 4 FROM L21. THESE LEADS ARE NOT USED.**
2. **UNLESS OTHERWISE NOTED, ALL COMPONENTS ARE SHOWN IN THE DE-ENERGIZED POSITION.**
3. **DASHED LINES INDICATE CONNECTIONS WHEN USED.**

RECONNECTION DIAGRAM

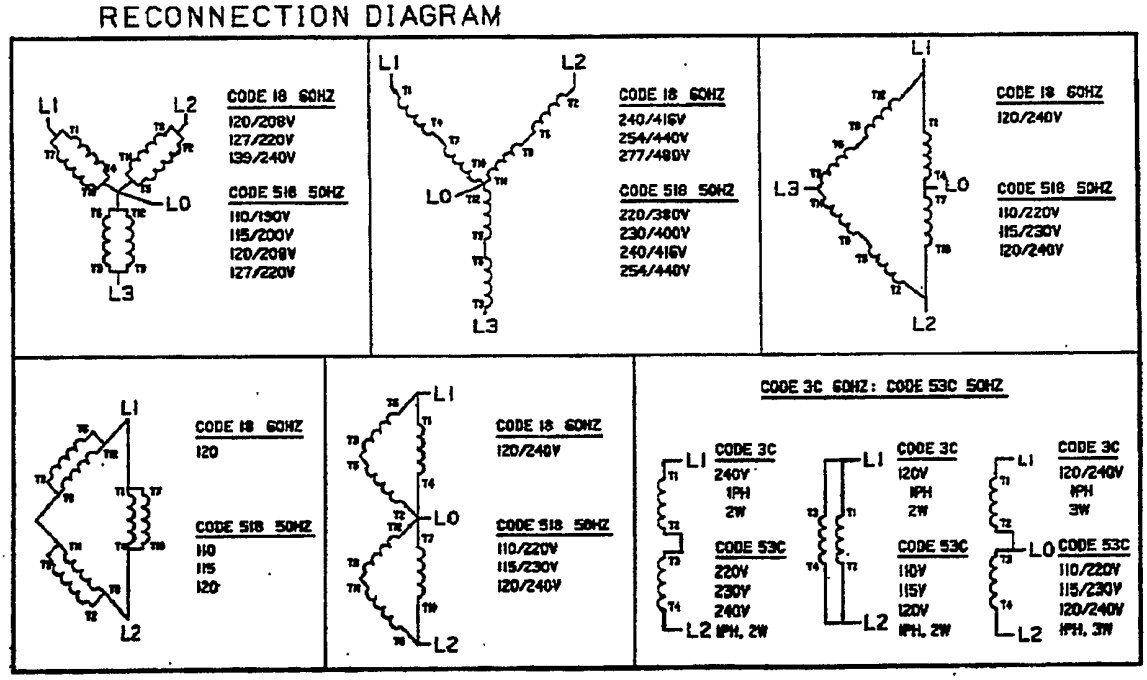

FIGURE 8-5. AC SCHEMATIC WIRING, SINGLE- AND THREE-PHASE, ELECTRONIC REGULATION (PG. 2 OF 2)

Redistribution or publication of this document, by any means, is strictly prohibited.

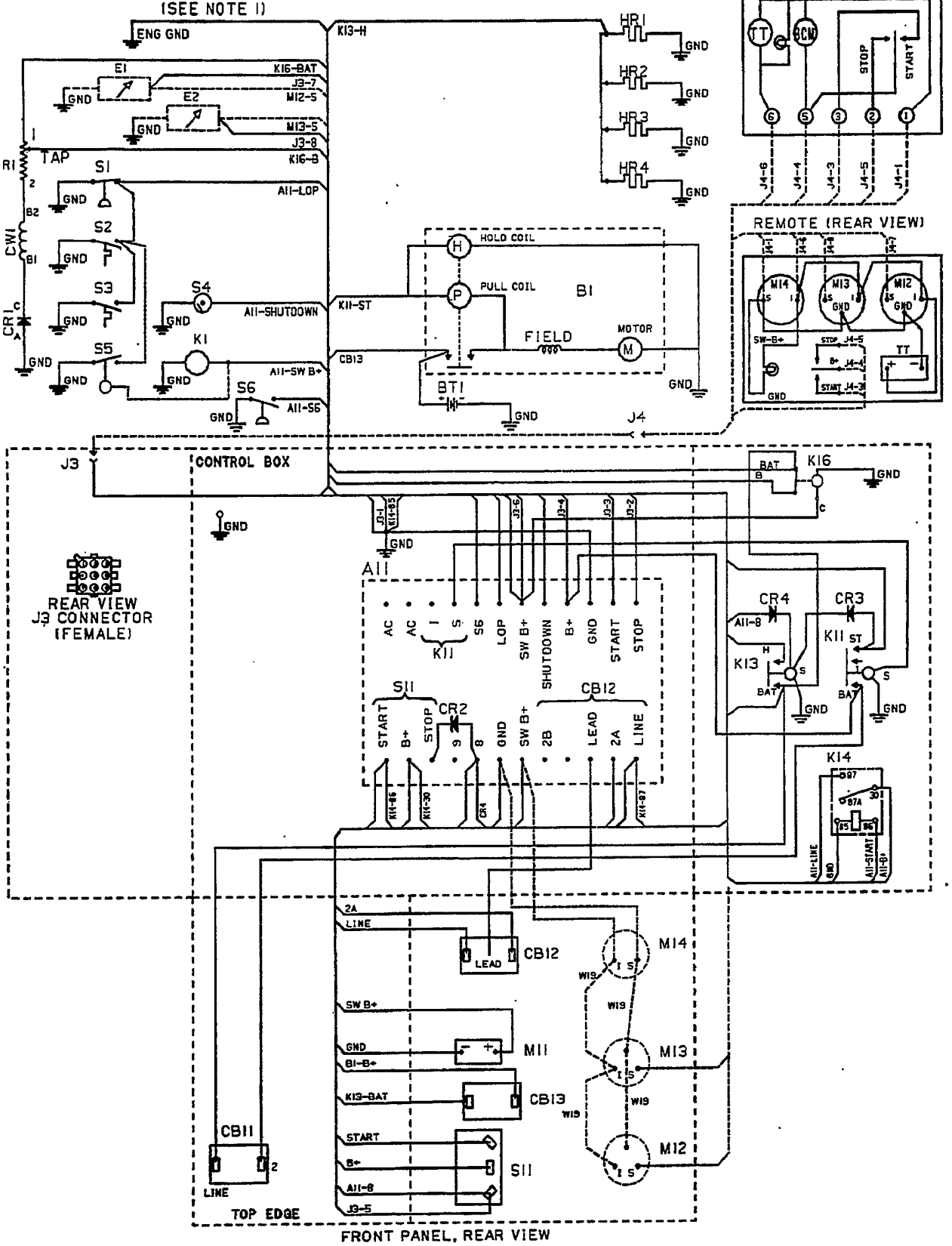

FIGURE 8-6. TYPICAL DC CONTROL WIRING DIAGRAM (MDL4, 12-VOLT, PG. 1 OF 2)

Redistribution or publication of this document,
by any means, is strictly prohibited.

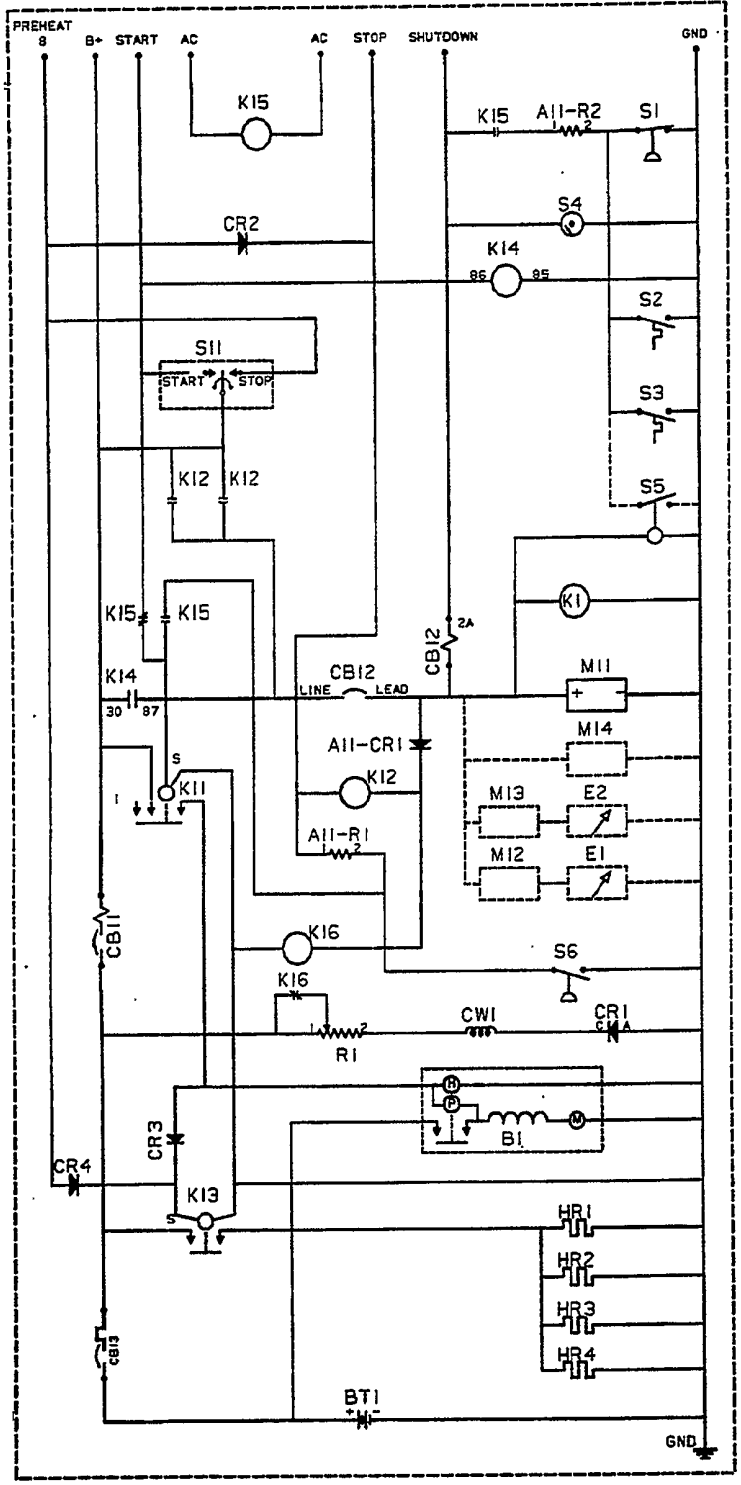

COMPONENT IDENTIFICATION

REF DES	DESCRIPTION
A11	PCB Ass'y, Engine Monitor
A11-K12	Relay, Power
A11-K15	Relay, Starter Protection
A11-R1	Resistor, K12
A11-R2	Resistor, LOP Timing
B1	Starter & Solenoid
BT1	Battery, 12V
CB11	Circuit Breaker, Control
CB12	Circuit Breaker, Fault
CB13	Circuit Breaker (50 Amp)
CR1	Rectifier, Battery Charging
CR2	Rectifier Ass'y, Stop
CR3,CR4	Rectifier
CW1	Winding, Battery Charging
E1	Sender, Oil Pressure
E2	Sender, Coolant Temp
HR1-4	Heater, Glow Plug
J3	Connector, Control
J4	Connector, Remote Control
K1	Solenoid, Fuel
K11	Relay, Start Solenoid, Pilot
K13	Relay, Heater
K14	Relay, Ign Start
K16	Regulator, Voltage (2-Step, 12-Volt)
M11	Meter, Time Totalizing
M12	Gauge, Oil Pressure
M13	Gauge, Coolant Temp.
M14	Voltmeter
R1	Resistor, Battery Charging
S1	Switch, Low Oil Pressure
S2	Switch, High Coolant Temp.
S3	Switch, High Exhaust Temp.
S4	Switch, Overspeed
S5	Switch, Low Coolant Level
S6	Switch, Control Pwr. Latch
S11	Switch, Start/Stop

NOTES:
1. **UNLESS OTHERWISE NOTED, ALL COMPONENTS ARE SHOWN IN DE-ENERGIZED POSITION.**
2. **DASHED LINES INDICATE CONNECTIONS WHEN USED.**

FIGURE 8-7. TYPICAL DC CONTROL SCHEMATIC DIAGRAM (MDL4, 12-VOLT, PG. 2 OF 2)

Redistribution or publication of this document, by any means, is strictly prohibited.

Provision is made on the genset for connection of a remote control panel. A 9-pin remote connector (J3) on the control box connects to a connector (J4) on the remote panel. See Figure 8-6. Onan has two remote kits (with or without meters) complete with installation instructions. Also available are complete harness assemblies with end-connectors in 15-, 25-, and 45-foot (4.6, 7.6, and 13.7 m) lengths. Call the Onan dealer or distributor for assistance in securing these items.

Additional control stations (without meters) can be added if desired. The genset senders (temperature and oil pressure) can each control only one meter. If the genset control box has meters, they must be disconnected to prevent erroneous readings. The electrical code does not allow the remote-control harness or wiring to be routed in the same conduit with AC wiring.

⚠CAUTION ***Interchanging the connections (shown in the control kit instruction sheet, or the generator set wiring diagram) can cause equipment damage.***

Be sure to seal all openings made for the wiring so exhaust or fuel vapors cannot enter the living quarters. If flexible-metal conduit is used for remote wiring, it must be sealed internally at the end where it terminates within the junction box. Flexible-metal conduit is not vapor-tight along its length due to its unique construction.

⚠WARNING ***Inhalation of exhaust gas or ignition of fuel vapor can cause severe personal injury or death. Be sure to vapor-seal flexible metal conduit and all openings made during installation of the generator set with a silicone/rubber-based sealant.***

BATTERY

General

Always use a battery at least as large as specified. The battery should be installed close to the genset, preferably in a separate compartment. The compartment must be well ventilated to prevent accumulation of explosive battery gases.

Mount the battery in an acid resistant tray on a platform above the floor. It must be secured to prevent shifting. If mounted in an engine compartment, always install a nonmetallic cover to prevent battery damage and arcing from accidentally dropped tools. Figure 8-8 shows a typical battery tray and cover.

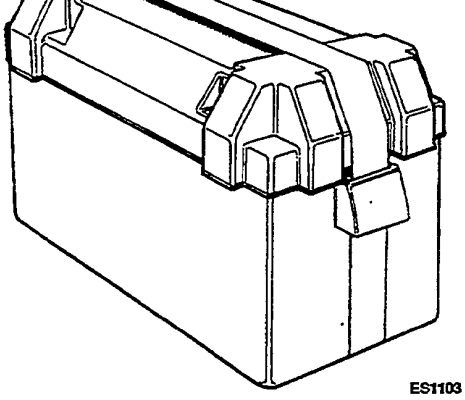

FIGURE 8-8. TYPICAL BATTERY TRAY AND COVER

Maintenance free batteries definitely should be considered for marine application. The technology in these batteries make them completely sealed and maintenance free. They offer higher output ratings (CCA), and better durability.

Connection

⚠WARNING ***Leakage of fuel in or around the generator set compartment presents a hazard of fire or explosion that can cause severe personal injury or death. Do not disconnect or connect battery cables if fuel vapors are present. Ventilate the compartment thoroughly with the bilge blowers or power exhausters.***

Using cable size specified in Table 8-1, connect the battery negative (–) lead to the genset at the location shown in Figure 8-9. Failure to do so can cause arcing or resistance in the cranking circuit. Be sure to use an EIT lockwasher on each side of the genset battery-negative (–) connector to help make a good electrical connection. Connect the battery positive (+) lead to the start solenoid as shown.

⚠WARNING **The ignition of diesel fuel or fumes can result in severe personal injury or death. Connect the generator set battery ground (–) lead only at the location shown.**

Connect the cables to the battery as shown, the negative (–) battery terminal last. Be sure the battery connections are clean and tight; then cover the battery terminals with a dielectric grease to retard corrosion.

TABLE 8-1. BATTERY CABLE SIZE REQUIREMENTS (Maximum Length of One Cable)

Cable Size	2	1	0	00	000	0000
Length	4 ft (1.2 m)	5 ft (1.5 m)	7 ft (2.1 m)	9 ft (2.7 m)	11 ft (3.4 m)	14 ft (4.3 m)

Redistribution or publication of this document, by any means, is strictly prohibited.

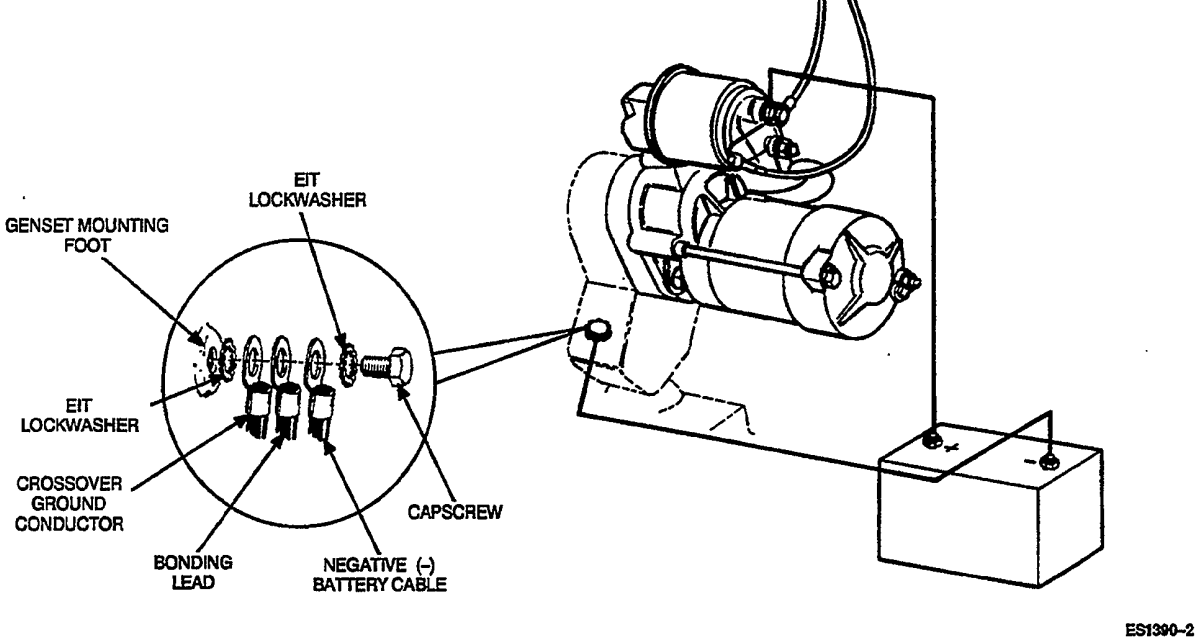

FIGURE 8-9. BATTERY CABLE CONNECTIONS

GROUNDING

The genset battery must be connected negative ground. Most propulsion engines and vessel electrical equipment have negative ground systems.

The genset and propulsion engine/s must be grounded in accordance with USCG regulation 33C FR183.415. The regulation requires a crossover ground conductor connected between the genset and propulsion engine cranking motor circuits. The conductor must be the same size as the largest battery cable. See Figure 8-10.

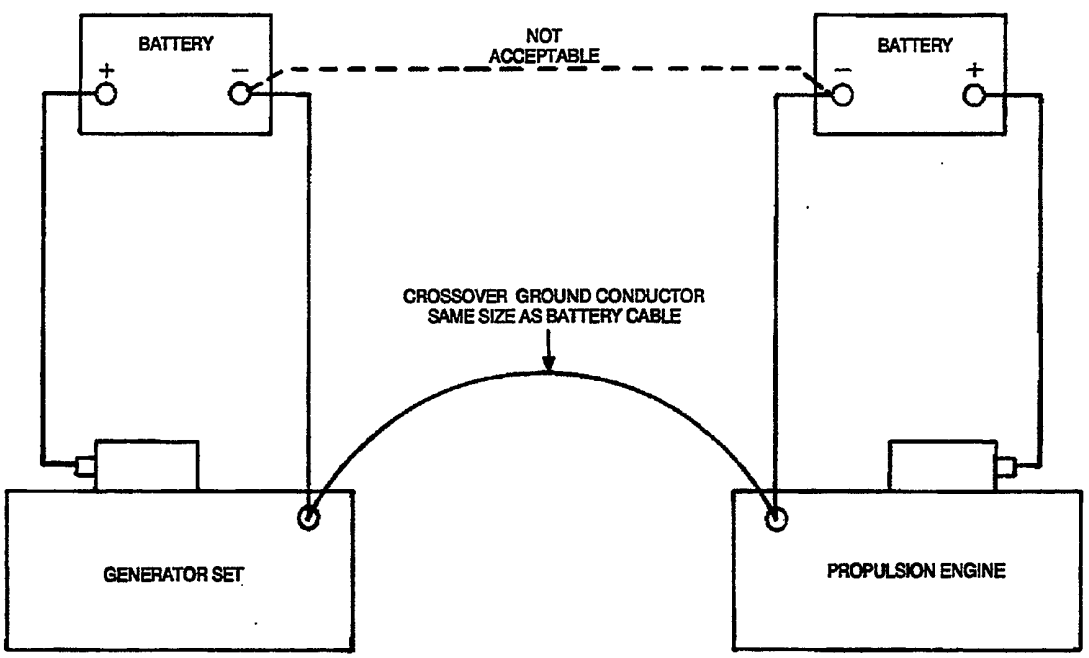

FIGURE 8-10. COMMON GROUND CONDUCTOR

Redistribution or publication of this document,
by any means, is strictly prohibited.

conductors common to the engines. This can happen if a cranking motor ground circuit becomes resistive or opens from corrosion, vibration, bad cable, etc.

⚠WARNING ***Improper ground can cause severe personal injury or death from fire or explosion. Be sure to install a common ground conductor between all on-board cranking circuits.***

The genset must be bonded to the vessel common-bonding conductor with a bonding lead or strap attached to the same location as the negative (–) battery cable). See Figure 8-9 for hardware used, and the proper assembly. Do not connect the battery negative (–) lead at a location other than shown.

If a metallic fuel line is installed between the fuel tank and the genset shutoff valve, it too must be bonded to the vessel common-bonding conductor.

Redistribution or publication of this document, by any means, is strictly prohibited.

Redistribution or publication of this document,
by any means, is strictly prohibited.

INSTALLATION CHECKS

Before trying to start the genset, determine that the installation is complete by answering affirmatively the following questions:

- Is the exhaust system secure and all connections tight?
- Is a flexible section of exhaust hose used between the genset and muffler?
- Is all exhaust hose certified for marine exhaust application, and adequately supported and protected?
- Is the exhaust outlet terminated away from windows, vents or other openings that might allow exhaust gases to enter the vessel, or be pulled into the vessel when in motion?
- Are the AC generator and load wires securely and correctly connected to the circuit breaker?
- Are the battery cables connected correctly and securely at the genset and battery?
- Has crankcase oil been added to the engine, and at the correct level? See the Maintenance section of the Operator's Manual.

  ⚠CAUTION ***Oil, coolant, and fuel have been drained from the engine at the factory prior to shipment. Operation without oil and coolant will damage the engine.***

INITIAL STARTING AND CHECKS

Refer to the Operator's Manual before trying to start the genset. Prime the sea water pump on initial start-up. Make sure the fuel shutoff valve and sea water cock are open. Operation without water will ruin the pump neoprene impeller.

- Start the genset by holding the Start/Stop switch in Start position. The genset should start within a few seconds. If not, check fuel supply and shutoff valve/s.
- Check water flow at the hull exhaust outlet, and operation of the genset. Refer to Operator's Manual for proper parameters.
- Check the exhaust system for leaks—visually and audibly. Note the security of the exhaust system supports. If any leaks are found, shut down the genset immediately and repair.

  ⚠WARNING ***Exhaust gas is deadly. For this reason, shut down the generator set immediately if an exhaust leak or exhaust component needs repair. Do not run the generator set until the exhaust system is repaired.***

- Check the genset for fuel, oil and coolant leaks. If any are found, shut down the genset and repair the leak before making any more checks.
- Connect an accurate AC voltmeter and frequency meter across two line terminals. Apply load to the generator and check the output.

Output frequency is determined by engine speed and normally does not require adjustment. Verify that frequency is correct before making voltage adjustments. Call an authorized distributor or dealer for assistance if needed.

VOLTAGE ADJUSTMENT

If the voltage is not within specs, it can be adjusted using the following procedures for either Transformer or Electronic regulation.

⚠WARNING ***High voltages within the control cabinet can cause severe personal injury or death. Proceed with care and do not touch electrical contacts with any tool, clothing, jewelry or body part.***

Magnetic Regulation

1. With the genset running, note if voltage needs to be increased or decreased.
2. Stop the genset. Disconnect the negative (–) battery cable before proceeding.

   ⚠WARNING ***Accidental starting of the generator set can cause severe personal injury or death. Disconnect the negative (–) battery cable before adjusting the regulator transformer taps.***

3. Move taps of transformer T21 as shown on the chart in Figure 8-3 (page 2 of 2).
4. Reconnect the battery cable. Operate the genset and recheck output voltage. If necessary, repeat the above steps. The genset is now ready for operation.

Redistribution or publication of this document, by any means, is strictly prohibited.

1. With the genset operating, set the Voltage Adjust potentiometer on the regulator board assembly (Figure 9-1) for the correct nameplate voltage. Also refer to Figure 8-4.

   ⚠CAUTION ***Do not adjust the Volts/Hz. Adjust potentiometer as it may be difficult to reset for proper operation. It is factory set using special calibration equipment.***

2. The genset is now ready for operation.

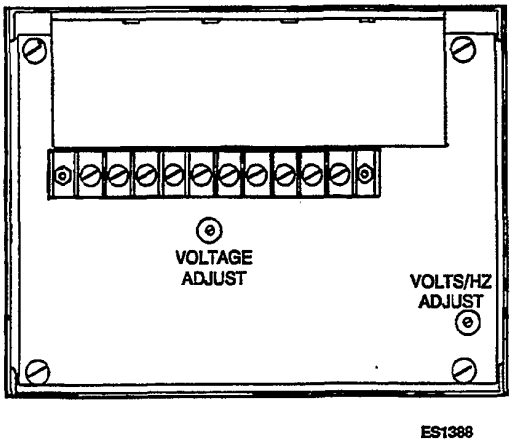

FIGURE 9-1. ELECTRONIC REGULATOR BOARD

Redistribution or publication of this document,
by any means, is strictly prohibited.

Redistribution or publication of this document,
by any means, is strictly prohibited.

Onan

Onan Corporation
1400 73rd Avenue N.E.
Minneapolis, MN 55432
1-800-888-ONAN
612-574-5000 International Use
Telex: 275477
Fax: 612-574-8087

Onan is a registered trademark of Onan Corporation

Redistribution or publication of this document,
by any means, is strictly prohibited.