Installation Manual

Onan Generator Set for Marine

MDKDP (Spec A)
MDKDR (Spec A)
MDKDS (Spec A)
MDKDT (Spec A)
MDKDU (Spec A)
MDKDV (Spec A)

English
Original Instructions 1-2022 A046J598 (Issue 5)

Table of Contents

1. SAFETY PRECAUTIONS 1
   1.1 Overview 1
   1.2 Precaution Symbols 1
   1.3 General Safety Precautions 2
   1.4 Electrical Shocks and Arc Flashes Can Cause Severe Personal Injury or Death 4
   1.5 Generator Set Voltage Is Deadly 5
   1.6 Engine Exhaust Is Deadly 5
   1.7 Diesel Fuel Is Combustible 6
   1.8 Battery Gas Is Explosive 6
   1.9 Moving Parts Can Cause Severe Personal Injury or Death 6
   1.10 Flammable Vapor Can Cause a Diesel Engine to Overspeed 6
   1.11 Hazards of Carbon Monoxide 7
      1.11.1 Carbon Monoxide Poisoning 7
      1.11.2 Special Risks of CO on Boats 7
      1.11.3 Protection from CO Poisoning 8
   1.12 Substances Hazardous to Health 8
      1.12.1 Antifreeze (Fleetguard - ES Compleat and EG Premix) 8
      1.12.2 Gas Oil 10
      1.12.3 Lubricant Oil - Premium Blue E 15W40 11
      1.12.4 Generator Set Warning Labels 12

2. INTRODUCTION 15
   2.1 About This Manual 15
   2.2 Related Literature 16
   2.3 Standards for Safety 17
      2.3.1 Ignition Protection 17
   2.4 Outline Drawings 18
   2.5 Noise 18
   2.6 Electromagnetic Compatibility Compliance 18

3. LOCATION AND MOUNTING 19
   3.1 Installation Location Considerations 19
      3.1.1 Ignition Protection 19
   3.2 Installation Specifications 20
   3.3 Lifting the Generator Set 20
   3.4 Mounting the Generator Set 20

4. MECHANICAL CONNECTIONS 21
   4.1 Ventilation 21
      4.1.1 Ventilation of Exhaust System 21
      4.1.2 Carbon Monoxide (CO) 21
   4.2 Fuel 22
      4.2.1 Fuel and Tanks 22

 Copyright © 2022 Cummins Inc.

4.2.2 Fuel Filters 22
4.2.3 Fuel Fittings 22
4.2.4 Fuel Hoses 23
4.2.5 Fuel Line Sizing 23
4.2.6 Fuel Pickup Tube 23
4.2.7 Fuel Shutoff Valves 23
4.2.8 Fuel Lift 24
4.3 Cooling 24
4.3.1 Cooling System Overview 24
4.3.2 Raw Water Pump 24
4.3.3 Raw Water Hose 24
4.3.4 Raw Water Strainer 24
4.3.5 Sea Cock 24
4.3.6 Through-hull Fitting and Strainer 25
4.3.7 Coolant Recovery Tank 25
4.3.8 Siphon Break 26
4.3.9 Keel Cooling 26
4.3.10 Cooling System Illustration 27
4.4 Exhaust System 29
4.4.1 Wet Exhaust Systems 29
4.4.2 Dry Exhaust Systems 30
4.4.3 Exhaust System Illustration 32

5. ELECTRICAL CONNECTIONS 35
5.1 AC Connections 35
5.1.1 Wiring Methods 35
5.1.2 Alternator Connections 36
5.1.3 Grounding 36
5.1.4 Transfer Switch 36
5.1.5 Load Balancing 37
5.2 Battery Connections 37
5.2.1 Batteries 37
5.2.2 Battery Location and Mounting 37
5.2.3 Battery Cables 37
5.2.4 Battery Recharging 38
5.3 Generator Set Ground (Vessel Bond) 38
5.4 Remote Control Connector 38
5.4.1 Connector Designations 39
5.4.2 Cummins Digital Displays 39
5.4.3 Remote Control Switch and Meter 39
5.4.4 Remote Control Wiring Harnesses 40
5.5 External Shutdown Devices 40
5.5.1 Factory Jumpers 40
5.5.2 Wiring Grommet and Strain Relief 40
5.5.3 Shutdown Indication 41
5.5.4 Option H647 41

Copyright © 2022 Cummins Inc.

5.6 Network Interface Module (NIM) 41
5.6.1 NIM Mounting Location 42
5.6.2 NIM Configuration Jumpers 42
5.7 NMEA 2000 Network Protocol 43

6. ADJUSTING AC OUTPUT VOLTAGE 45
6.1 Reconnecting Generator 45
6.1.1 Reconnection Label 45
6.2 Adjusting Voltage 47
6.3 Adjusting Voltage Using Digital Display 47
6.4 Adjusting Voltage Using Control Switch 47

7. INSTALLATION CHECKLIST 49

8. SPECIFICATIONS 51
8.1 13.5 MDKDP, 17.5 MDKDR, 19 MDKDV 51
8.2 17 MDKDP, 21.5 MDKDR 54
8.3 22.5 MDKDT, 27 MDKDU, 29 MDKDS 56

APPENDIX A. WIRING DIAGRAMS 61
A.1 Wiring Drawing 63

APPENDIX B. OUTLINE DRAWINGS 67
B.1 MDKDP, MDKDR, MDKDV Outline Drawing 69
B.2 MDKDS, MDKDT, MDKDU Outline Drawing 72

 Copyright © 2022 Cummins Inc.

This page is intentionally blank.

1 Safety Precautions

1.1 Overview

⚠ WARNING

The generator set is not a life support system

The generator set can stop without warning. Adults, children, persons with physical or mental limitations, and pets could suffer personal injury or death.

A personal attendant, redundant power, or alarm system must be used if generator set operation is critical.

NOTICE

This generator set is not to be the main source of power for communication and steering systems. It can stop without warning.

Thoroughly read the Operator Manual before operating the generator set. It contains important instructions that should be followed during operation and maintenance. Safe operation and top performance can only be achieved when equipment is properly operated and maintained. The owners and operators of the generator set are solely responsible for its safe operation.

Generator set operation, maintenance, and installation must comply with all applicable local, state, and federal codes and regulations. Electricity, fuel, exhaust, moving parts, and batteries present hazards which can result in severe personal injury or death. Only trained and experienced personnel with knowledge of fuels, electricity, and machinery hazards shall perform generator set installation or adjustment procedures. Also, only trained and experienced personnel with knowledge of fuels, electricity, and machinery hazards shall remove, dismantle, or dispose of the generator set.

SAVE THESE INSTRUCTIONS.

1.2 Precaution Symbols

The following symbols used in this manual alert you to potential hazards to operator, maintenance personnel, and equipment.

⚠ DANGER

Indicates a hazardous situation that, if not avoided, will result in death or serious injury.

⚠ WARNING

Indicates a hazardous situation that, if not avoided, could result in death or serious injury.

⚠ CAUTION

Indicates a hazardous situation that, if not avoided, could result in minor or moderate injury.

NOTICE

Indicates information considered important, but not hazard-related (e.g., messages relating to property damage).

 Copyright © 2022 Cummins Inc.

1.3 General Safety Precautions

⚠ WARNING

Hot, moving, and electrically live parts

Hot, moving, and electrically live parts can cause severe personal injury or death.

Keep children away from the generator set.

⚠ WARNING

Hot,Moving and Electrically live parts

Hot,Moving and Electrically live parts can cause severe personal injury or death.

Only trained and experienced personnel should make adjustments while the generator set is running.

⚠ WARNING

Electrical Generating Equipment

Incorrect operation can cause severe personal injury or death.

Do not operate equipment when fatigued, or after consuming any alcohol or drug.

⚠ WARNING

Electrical Generating Equipment

Incorrect operation and maintenance can result in severe personal injury or death.

Make sure that only suitably trained and experienced service personnel perform electrical and/or mechanical service.

⚠ WARNING

Moving Parts

Moving parts can cause severe personal injury.

Use extreme caution around moving parts. All guards must be properly fastened to prevent unintended contact.

⚠ WARNING

Moving Parts

Running the generator set without the cover or service door can cause severe personal injury or equipment damage.

Do not operate the generator set with the cover or service doors removed.

⚠ WARNING

Hot Pressurized Liquid

Contact with hot liquid can cause severe burns.

Do not open the pressure cap while the engine is running. Let the engine cool down before removing the cap. Turn the cap slowly and do not open it fully until the pressure has been relieved.

Copyright © 2022 Cummins Inc.

⚠ WARNING

Hot Surfaces

Contact with hot surfaces can cause severe burns.

The unit is to be installed so that the risk of hot surface contact by people is minimized. Wear appropriate PPE when working on hot equipment and avoid contact with hot surfaces.

⚠ WARNING

Combustible Liquid

Ignition of combustible liquids is a fire or explosion hazard which can cause severe burns or death.

Do not store fuel, cleaners, oil, etc., near the generator set.

⚠ WARNING

Combustible Liquid

Ignition of combustible liquids is a fire or explosion hazard which can cause severe burns or death.

Do not use combustible liquids like ether.

⚠ WARNING

Toxic Hazard

Ethylene glycol, used as an engine coolant, is toxic to humans and animals.

Wear appropriate PPE. Clean up coolant spills and dispose of used coolant in accordance with local environmental regulations.

⚠ WARNING

Toxic Hazard

Used engine oils have been identified by some state and federal agencies to cause cancer or reproductive toxicity.

Do not ingest, breathe the fumes, or contact used oil when checking or changing engine oil. Wear protective gloves and face guard.

⚠ WARNING

Carbon Monoxide

Inhalation of carbon monoxide can cause severe personal injury or death.

Test and confirm that all carbon monoxide detectors are working in accordance with the manufacturer's instructions or owner's manual prior to every startup, and after 8 hours of running.

⚠ WARNING

Toxic Gases

Substances in exhaust gases have been identified by some state and federal agencies to cause cancer or reproductive toxicity.

Do not breathe in or come into contact with exhaust gases.

 Copyright © 2022 Cummins Inc.

⚠ WARNING

Fire Hazard

Accumulated grease and oil are a fire hazard. Fire can cause severe burns or death.

Keep the generator set and the surrounding area clean and free from obstructions. Repair oil leaks promptly.

⚠ WARNING

Accidental or remote starting

Accidental starting of the generator set while working on it can cause severe personal injury or death

To prevent accidental or remote starting while working on the generator set, disconnect the negative (–) battery cable at the battery using an insulated wrench.

NOTICE

Unsecured or loose fasteners can cause equipment damage. Make sure all fasteners are secure and properly torqued.

NOTICE

Keep multi-type ABC fire extinguishers close by. Class A fires involve ordinary combustible materials such as wood and cloth. Class B fires involve combustible and flammable liquid fuels and gaseous fuels. Class C fires involve live electrical equipment. (Refer to NFPA No. 10 in the applicable region.)

1.4 Electrical Shocks and Arc Flashes Can Cause Severe Personal Injury or Death

⚠ WARNING

Electric Shock Hazard

Voltages and currents present an electrical shock hazard that can cause severe burns or death.

Contact with exposed energized circuits with potentials of 50 Volts AC or 75 Volts DC or higher can cause electrical shock and electrical arc flash. Refer to standard NFPA 70E or equivalent safety standards in corresponding regions for details of the dangers involved and for the safety requirements.

Guidelines to follow when working on de-energized electrical systems:

- Use proper PPE. Do not wear jewelry and make sure that any conductive items are removed from pockets as these items can fall into equipment and the resulting short circuit can cause shock or burning. Refer to standard NFPA 70E for PPE standards.
- De-energize and lockout/tagout electrical systems prior to working on them. Lockout/Tagout is intended to prevent injury due to unexpected start-up of equipment or the release of stored energy. Please refer to *Locking the Generator Set Out of Service* section for more information.
- De-energize and lockout/tagout all circuits and devices before removing any protective shields or making any measurements on electrical equipment.
- Follow all applicable regional electrical and safety codes.

Copyright © 2022 Cummins Inc.

Guidelines to follow when working on energized electrical systems:

NOTICE

It is the policy of Cummins Inc. to perform all electrical work in a de-energized state. However, employees or suppliers may be permitted to occasionally perform work on energized electrical equipment only when qualified and authorized to do so and when troubleshooting, or if de-energizing the equipment would create a greater risk or make the task impossible and all other alternatives have been exhausted.

NOTICE

Exposed energized electrical work is only allowed as per the relevant procedures and must be undertaken by a Cummins authorized person with any appropriate energized work permit for the work to be performed while using proper PPE, tools and equipment.

In summary:

- Do not tamper with or bypass interlocks unless you are authorized to do so.
- Understand and assess the risks - use proper PPE. Do not wear jewelry and make sure that any conductive items are removed from pockets as these items can fall into equipment and the resulting short circuit can cause shock or burning. Refer to standard NFPA 70E for PPE standards.
- Make sure that an accompanying person who can undertake a rescue is nearby.

1.5 Generator Set Voltage Is Deadly

- Generator set electrical output connections must be made by a trained and experienced electrician in accordance with applicable codes.
- Use caution when working on live electrical equipment. Remove all jewelry, make sure clothing and shoes are dry, stand on a dry wooden platform or rubber insulating mat, and use tools with insulated handles.

1.6 Engine Exhaust Is Deadly

- Properly working carbon monoxide detectors must be located in all living areas of the boat.
- Never occupy the boat while the generator set is running unless the boat is equipped with properly working marine carbon monoxide detectors.
- The exhaust system must be installed in accordance with the generator set Installation Manual and be free of leaks.
- Prior to every startup and after every eight hours of running, all carbon monoxide detectors must be tested and confirmed to be working in accordance with the manufacturer instructions or owner manual.
- Make sure the bilge is adequately ventilated with a power exhauster or blower.
- Inspect for exhaust leaks at every startup and after every eight hours of operation.
- For more information about carbon monoxide see American Boat and Yacht Council (ABYC) publication TH-22—*Educational Information About Carbon Monoxide.*

 Copyright © 2022 Cummins Inc.

1.7 Diesel Fuel Is Combustible

- Do not smoke or turn electrical switches on or off where fuel fumes are present or in areas sharing ventilation with fuel tanks or equipment. Keep flames, sparks, pilot lights, arc-producing equipment, and all other sources of ignition well away.
- Fuel lines must be secured, free of leaks, and separated or shielded from electrical wiring.

1.8 Battery Gas Is Explosive

- Wear splash-proof safety glasses.
- Do not smoke or permit flames or sparks to occur near the battery at any time or anywhere near the generator set.
- To reduce arcing when disconnecting or reconnecting battery cables, always disconnect the negative (–) battery cable first and reconnect it last.

1.9 Moving Parts Can Cause Severe Personal Injury or Death

- Do not wear loose clothing or jewelry near moving parts such as PTO (power take-off) shafts, fans, belts, and pulleys.
- Keep hands away from moving parts.
- Keep protective guards in place over fans, belts, pulleys, and other moving parts.

1.10 Flammable Vapor Can Cause a Diesel Engine to Overspeed

⚠ WARNING

Flammable Vapour

Flammable Vapour can cause an engine to overspeed and become difficult to stop, resulting in possible fire, explosion, severe personal injury, and death.

Do not operate a generator set where a flammable vapor environment can be created, unless the generator set is equipped with an automatic safety device to block the air intake and stop the engine.

The owners and operators of the generator set are solely responsible for operating the generator set safely. Contact your authorized Cummins distributor for more information.

1.11 Hazards of Carbon Monoxide

⚠ WARNING

Toxic Hazard

Engine-driven Generator Sets can produce harmful levels of carbon monoxide causing nausea, fainting, or death.

Make sure the generator set is well maintained and the boat is well ventilated. Recommended carbon monoxide detectors and alarms are installed.

1.11.1 Carbon Monoxide Poisoning

Carbon Monoxide (CO) is an odorless, colorless, tasteless, and non-irritating gas. You cannot see it or smell it. Exposure, even to low levels of CO, for a prolonged period can lead to asphyxiation (lack of oxygen) resulting in death.

Mild effects of CO poisoning include:

- eye irritation
- dizziness
- sleepiness
- headaches
- fatigue
- inability to think clearly

More extreme symptoms include:

- vomiting
- seizures
- collapse

1.11.2 Special Risks of CO on Boats

Depending on air temperature and wind, CO can accumulate between hulls, under an overhanging deck or rear swimming platform, and in and around the boat. A swimmer can be exposed to lethal levels of CO when the generator set is running. Passengers on deck and in the living quarters can also be exposed, especially when the boat is docked, beached, or tied to a neighboring boat.

The risk of exposure to CO can be multiplied greatly by the "station wagon" effect, obstructions that block exhaust dissipation, and infiltration from neighboring boats. To protect against all three situations, it is recommended that reliable and approved marine CO detector alarms be installed on your boat.

- ***The Station Wagon Effect:*** A boat pushes aside the air through which it is moving, causing a zone of low pressure in the back of the boat and cabins into which exhaust gases can be drawn (see figure below). A breeze across an anchored boat can have the same effect. Opening doors and windows so that air can flow through the boat can reduce the effect.

 Copyright © 2022 Cummins Inc.

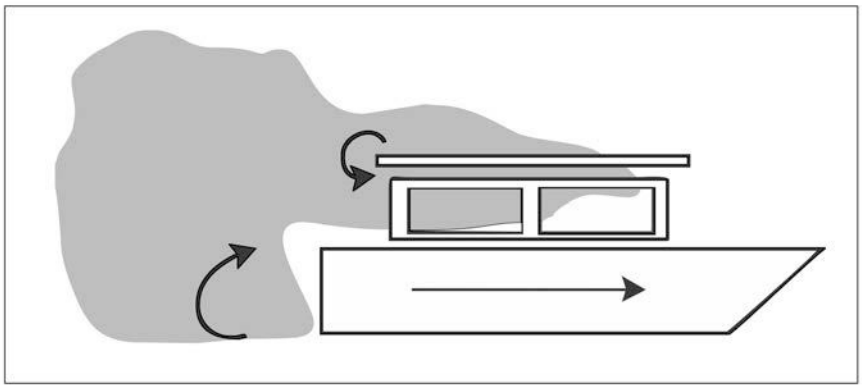

FIGURE 1. STATION WAGON EFFECT

- ***Obstructions:*** Anchoring near a large object such as a boat house or sea wall, or in a confined space such as a canyon, can cause exhaust gases to accumulate in and around the boat despite good generator set maintenance and proper ventilation. Don't run the generator set when anchored in such places.
- ***Exhaust from Neighboring Boats:*** When boats are anchored in close quarters, exhaust from neighboring boats can accumulate in and around yours.

1.11.3 Protection from CO Poisoning

- Constantly watch for swimmers when the generator set is running.
- Make sure exhaust cannot get under the deck, between hulls, or enter the living quarters through a window, vent, or door.
- Make sure all CO detectors are working properly.
- Pay attention to the signs of CO poisoning.
- Check the exhaust system for corrosion, obstruction, and leaks each time you start the generator set and every eight hours if you run it continuously.

1.12 Substances Hazardous to Health

Generator sets use substances, as well as emit and create wastes, which can cause health risks. Generator set operators must use appropriate personal protective equipment (such as clothing, gloves, protective glasses, goggles, and respiration equipment) when lungs, eyes, or skin are exposed to fuel, oil, coolant, wet batteries, grease, cleaning agents, or other substances. Use appropriate containers for transport, storage, and disposal of waste substances. Follow local regulations for disposal and recycling.

1.12.1 Antifreeze (Fleetguard - ES Compleat and EG Premix)

This antifreeze is also known as an ethylene glycol based coolant, summer coolant, coolant additive. It is a purple-colored viscous liquid with a mild chemical odor, is soluble in water, and is harmful under certain conditions. It contains ethylene glycol and diethylene glycol. Ethylene glycol is a potentially hazardous constituent.

The substance has a boiling point of 107° C (224.6° F) and a flash point of 121° C (249.8° F).

It is used as an engine coolant additive and can be found in engine cooling systems and heat exchangers. Installers, operators, and maintainers are likely to encounter this substance.

Copyright © 2022 Cummins Inc.

1.12.1.1 Hazardous Reactions

Ethylene glycol is combustible when exposed to heat or flame and can react vigorously with oxidants.

- It is a moderate explosive hazard in the form of vapor when exposed to heat or flame. Hazardous products resulting from combustion or decomposition include carbon monoxide, carbon dioxide, and acrid smoke. Self-contained breathing apparatus must be worn in the event of fume build up.
- It is incompatible with sulfuric acid, nitric acid, caustics, and aliphatic amines. Avoid any strong oxidizing agents.
- It may cause neurological signs and symptoms, kidney damage, and is a skin and eye irritant.
- It is very toxic in particulate form upon inhalation.
- It is harmful if swallowed. A lethal dose for humans is reported to be 100 ml.

1.12.1.2 Protective Measures

Refrain from eating, drinking, or smoking when using the product. Adopt a high standard of personal hygiene. In case of skin contact, wash immediately with soap and water.

Ensure good ventilation and avoid heat sources. Avoid breathing mist. If there is a risk of vapor or particulate, use a suitable organic vapor mask.

Eye protection, gloves, overalls, and an impervious apron should be worn. Avoid contamination inside the gloves. If overalls become contaminated, discontinue use and clean thoroughly.

1.12.1.3 Storage and Transport

Store and transport only in correctly marked containers. Keep containers closed when not in use. Keep cool, out of sunlight, and away from naked flames and strong acids. Do not freeze. Store well away from food-stuffs and drinking water. Take special care to avoid discharge into drains, sewers, and water-course.

Contain leaks and spills with sand, earth, or non-combustible absorbent material to prevent entry of substance into drains (sewage systems), water-courses, and land. Eliminate all ignition sources. Use a plastic shovel to transfer to a suitable container. Dispose of unwanted or absorbed substance through an authorized contractor to a licensed site.

1.12.1.4 Emergency Action

Emergency Type	Action
Fire	Fire fighters are to use self-contained breathing apparatus. Keep fire-exposed containers cool. Prevent run-off from entering waterways, drains, and drinking water supplies. Extinguishing media: CO_2, alcohol resistant foam, dry powder, or water spray.
Ingestion	Toxic by ingestion. If swallowed, contact a doctor or poison control center. Induce vomiting only under the advice of a doctor or poison control center. Delayed treatment may result in fatality.
Inhalation (of Vapor)	Remove from further exposure. In case of irritation to lungs or throat, seek medical advice.
Aspiration (Inhalation of Liquid)	Obtain immediate medical assistance.
Eyes	Flush copiously with water or preferably eye-wash solution for at least five minutes. Seek medical advice.
Skin	Wash thoroughly with soap and water and seek medical attention if irritation develops. Change clothing if necessary and wash clothing before re-use.

 Copyright © 2022 Cummins Inc.

Emergency Type	Action
Spillage	Soak up using an absorbent material and dispose of as directed under Storage and Transport.

1.12.2 Gas Oil

This product is also known as red diesel, fuel oil, and type A1 or A2. It can be pale red or clear liquid with a characteristic mild odor. It contains catalytically cracked oil, petroleum distillates, quinizarin, and gas oil maker dye red. The catalytically cracked oil and petroleum distillates are potentially hazardous constituents.

The substance has an initial boiling point of 180 °C (345 °F), a flash point greater than 56 °C (132.8 °F), a vapor pressure less than 0.7 mm Hg at 20 °C (68 °F), and has negligible solubility in water.

It is used as a fuel for off-road diesel powered vehicles and stationary engines and can be found in fuel tanks, pipes, and injection systems. The substance should not be used for any other purpose without contacting the manufacturer or supplier. Installers, operators, and maintainers are likely to encounter this substance.

1.12.2.1 Hazardous Reactions

This liquid is flammable. Avoid smoking, heat sources - such as welding and naked flames - sparks, and static electricity build-up. Thermal decomposition products are hazardous, containing CO_x, NO_x, and SO_x compounds.

The vapor is explosive. High vapor concentrations can cause respiratory irritation, dizziness, nausea, and loss of consciousness. Excessive and prolonged exposure to the mist can cause chronic inflammatory reaction of the lungs and a form of pulmonary fibrosis.

Avoid strong oxidizing agents such as chlorates which may be used in agriculture.

Gas oil is slightly irritating to the skin and has a de-fatting action. Toxicity following single exposure to a high level of gas oil is of low importance. Prolonged, repeated skin contact may de-fat the skin resulting in possible skin irritation and dermatitis. In some cases warty, cancerous growths have occurred.

1.12.2.2 Protective Measures

Ensure good ventilation and avoid heat sources. Observance of good housekeeping rules ensures general safety. Do not smoke. Avoid breathing mist.

When working on or testing injection equipment, special care is required to avoid perforation of skin by high pressure fuel. Use eye protection in the event of suspected high pressure leak.

Adopt a high standard of personal hygiene. In the case of skin contact, wash well with soap and water.

Use gloves, overalls, and eye protection if there is a risk of splashing. Use oil-impervious gloves and avoid contamination inside the gloves. If overalls become contaminated, discontinue use and clean thoroughly. Contaminated clothing should be removed, soaked with water, and laundered before re-use.

No special respiratory precautions are necessary in normal use.

Do not use as a solvent for removing dirt and grease, etc., from skin.

1.12.2.3 Storage and Transport

Store and transport only in correctly marked containers. Keep containers closed when not in use. Keep cool, out of sunlight, and away from naked flames. Electrical continuity is required between the transport and storage vessels during product transfer.

Contain leak or spill with sand, earth, or other suitable material, and prevent entry of substance into drainage (sewage system), water-courses, and land. Dispose of unwanted or absorbed substance through an authorized contractor to a licensed site.

Copyright © 2022 Cummins Inc.

Inform fire and local authorities should the product reach waterways, drains, etc.

1.12.2.4 Emergency Action

- Fire - Avoid making sparks. Fire fighters are to use self-contained breathing apparatus. Keep fire-exposed containers cool, using water fog or spray. Prevent run-off from entering waterways, drains, and drinking water supplies.
  - Extinguishing media for large fire: Foam or water fog. Never use water jet.
  - Extinguishing media for small fire: Foam or dry powder, AAAF, CO_2, sand, earth.
- Ingestion - Do not induce vomiting. Wash mouth out with water and send to hospital immediately.
- Inhalation (of vapor) - Remove from further exposure. Obtain medical assistance immediately.
- Aspiration (inhalation of liquid) - If, following ingestion of gas oil, vomiting occurs, there is danger of aspiration into the lungs. This would cause intense local irritation and chemical pneumonitis that can be fatal. Obtain immediate medical assistance.
- Eyes - Irrigate copiously with water or preferably eye-wash solution for at least five minutes. If irritation persists seek medical advice.
- Skin - Wash thoroughly with soap and water. Change clothing if necessary. If high pressure injection has occurred prompt surgical attention is required.
- Spillage - Absorb using sand, earth, or other suitable material. Dispose of unwanted or absorbed flammable material as directed under Storage and Transport.

1.12.3 Lubricant Oil - Premium Blue E 15W40

Also known as oil, lube oil, sump oil. New oil is a dark, viscous liquid with a slight characteristic odor. The base oil contains distillates (petroleum) and solvent-dewaxed heavy paraffinic. It is not classified as dangerous according to Directive 1999/45/EC and its amendments, and is not classified according to the EU regulations.

It has a boiling point greater than 150° C (302° F), and a flash point Open Cup of 220° C (438° F) (Cleveland) and is insoluble in cold water.

It is used in engine lubricant oil systems, sump pan and filters, make-up tanks, and piping systems as a lubrication oil for use in a wide range of diesel engines operating under severe conditions. Installers, operators, and maintainers are likely to encounter this product.

1.12.3.1 Hazardous Reactions

This product is stable, although slightly re-active, with oxidizing agents. Results of decomposition are carbon oxides (CO, CO_2) and water.

Although harmful if ingested (swallowed) or aspirated (breathed in), repeated or prolonged exposure is not known to aggravate medical conditions.

Used oil may contain harmful combustion by-products and un-burnt fuel that can cause skin reactions as detailed for fuel. Particular care must be taken if oil from a severely overheated engine is handled. Use impervious gloves, lab coat, and safety glasses. Do not breathe vapor or spray.

1.12.3.2 Protective Measures

Ensure good ventilation and avoid heat sources.

Adopt a high standard of personal hygiene. In case of skin contact, wash thoroughly with soap and water.

Use safety glasses, impervious gloves, and lab coat. Avoid contamination inside the gloves. If overalls become contaminated, discontinue use and clean thoroughly.

 Copyright © 2022 Cummins Inc.

No special respiratory precautions are necessary in normal use. Do not breathe vapor or spray when handling hot materials.

1.12.3.3 Storage and Transport

Store and transport only in correctly marked containers. Keep containers tightly sealed when not in use. Keep in cool, well ventilated area, out of sunlight and away from naked flames. Store well away from food-stuffs and drinking water.

Wear splash goggles, full suit, boots, and gloves. Absorb leaks or spills with an inert material and dispose of unwanted or absorbed substance through an authorized contractor to a licensed site. Finish cleaning by spreading water on the contaminated surface and allow to evacuate through the sanitary system.

1.12.3.4 Emergency Action

- Fire - Fire-fighters are to use self-contained breathing apparatus and full turnout gear. Keep fire-exposed containers cool.
  - Extinguishing media for large fire: Use water spray, fog or foam. Do not use water jet.
  - Extinguishing media for small fire: Use dry chemical powder or CO_2.
- Ingestion - Do not induce vomiting. Obtain medical advice immediately.
- Inhalation (of vapor) - Remove from further exposure. Obtain medical attention.
- Aspiration (inhalation of liquid) - Obtain immediate medical assistance.
- Eyes - Flush copiously with water or preferably eye-wash solution for at least fifteen minutes. Obtain medical advice.
- Skin - Wash thoroughly with soap and water. Obtain medical advice if irritation develops. Change clothing if necessary and wash before re-use.
- Spillage - Absorb with an inert material and dispose of as directed under Storage and Transport.

1.12.4 Generator Set Warning Labels

Warning signs are provided on the generator set at or near the point of risk. To avoid injury, always take the necessary precautions as indicated on the sample signs shown below.

	Caution or Warning. Indicates a risk of personal injury.
	Caution or Warning of Temperature Hazard. Indicates a risk of personal injury from high temperature.
	Caution or Warning of High Voltage Hazard. Indicates a risk of personal injury from electric shock or electrocution.
	Caution or Warning of Engine Coolant Pressure Hazard. Indicates a risk of personal injury from hot pressurized engine coolant.

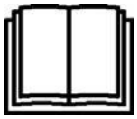	Caution or Warning. Indicates to read Operator Manual for additional information.
	Caution or Warning of No Step. Indicates a risk of personal injury or equipment damage from stepping on equipment.
	Caution or Warning of Combustion or Explosion Hazard. Indicates a risk of personal injury from explosion.
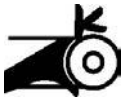	Caution or Warning of Belt and Rotating Part Hazard. Indicates a risk of personal injury from entanglement in moving parts.
	Caution or Warning of Chemical (ingestion or burn) Hazard. Indicates a risk of personal injury or asphyxiation from poisonous fumes or toxic gases.
	Caution or Warning of High Voltage or Current Source Hazard. Indicates a risk of personal injury from electrical shock or electrocution.
	Caution or Warning of Fan and Rotating Part Hazard. Indicates a risk of personal injury from entanglement in moving parts.

 Copyright © 2022 Cummins Inc.

This page is intentionally blank.

2 Introduction

⚠ WARNING

Hazardous Voltage

Contact with high voltages can cause severe electrical shock, burns, or death.

Make sure that only a trained and experienced electrician makes generator set electrical output connections, in accordance with the installation instructions and all applicable codes.

⚠ WARNING

Electrical Generating Equipment

Faulty electrical generating equipment can cause severe personal injury or death.

Generator sets must be installed, certified, and operated by trained and experienced persons in accordance with the installation instructions and all applicable codes.

2.1 About This Manual

This manual is a guide for the installation of the generator set or sets listed on the front cover. Proper installation is essential for top performance. Read through this manual before starting the installation.

This manual addresses the following aspects of the installation:

- Location and mounting
- Accessibility for operation and maintenance
- Selection of ignition-protected devices for areas where gasoline vapors can accumulate (ignition protection is not included on all generator sets)
- Generator set compartment ventilation
- Fuel connections
- Engine cooling
- Engine exhaust discharge and silencing
- Preventing the migration of exhaust gases and fuel vapors into living quarters
- Electrical connections
- Bonding for grounding
- Batteries
- Noise and vibration

See the generator set operator manual for operation and maintenance information, and the service manual for service information.

The information contained within this manual is based on information available at the time of going to print. In line with Cummins Inc. policy of continuous development and improvement, information may change at any time without notice. The users should therefore make sure that before commencing any work, they have the latest information available. The latest version of this manual is available on QuickServe Online (**https://quickserve.cummins.com**).

 Copyright © 2022 Cummins Inc.

2.2 Related Literature

Before any attempt is made to operate the generator set, the operator should take time to read all of the manuals supplied with the generator set, and to familiarize themselves with the warnings and operating procedures.

⚠ CAUTION

A generator set must be operated and maintained properly if you are to expect safe and reliable operation. The Operator manual includes a maintenance schedule and a troubleshooting guide.

The Health and Safety manual must be read in conjunction with this manual for the safe operation of the generator set:

- Health and Safety Manual (0908-0110)

The relevant manuals appropriate to your generator set are also available, the documents below are in English:

- Operator Manual (A046J600)
- Installation Manual (A046J598)
- Generator Service Manual (A046J602)
- Parts Manual MDKDP, MDKDR, MDKDV (A046L892)
- Parts Manual MDKDS, MDKDT, MDKDU (A046J604)
- Specification and Data Sheet MDKDP NAS-5897, MDKDR NAS-5898, MDKDV NAS-5902, MDKDS NAS-5899, MDKDT NAS-5900, and MDKDU NAS-5901 (for technical data specific to the generator set)
- Standard Repair Times - BT Family (0900-0625) (for MDKDP, MDKDR, MDKDV)
- Standard Repair Times - CD Family (0900-0634) (for MDKDS, MDKDT, MDKDU)
- Service Tool Manual (A043D529)
- Failure Code Manual (F1115C)
- Application Manual T-030, *Liquid Cooled Generator Sets* - for application information (A040S369)
- Engine Service Manual for Kubota V2003-E3BG (13.5 MDKDP) (981-0551)
- Engine Service Manual for Kubota V2403-M-E3BG (17.5 MDKDR and 19 MDKBV) (981-0551)
- Engine Service Manual for Kubota V2403-M-E4BG (17 MDKDP and 21.5 MDKDR) (A049P370)
- Engine Service Manual for Kubota V3300-E3BG (19 MDKDT, 22.5 MDKDT and 27 MDKDU) (981-0553)
- Engine Service Manual for Kubota V3300-E4BG (29 MDKDS) (A049P372)
- Warranty Administration Manual (4021290)
- Emissions Warranty Statement for Kubota (A048K395)

Copyright © 2022 Cummins Inc.

2.3 Standards for Safety

⚠ WARNING

The generator set is not a life support system

The generator set can stop without warning. Adults, children, persons with physical or mental limitations, and pets could suffer personal injury or death.

A personal attendant, redundant power, or alarm system must be used if generator set operation is critical.

NOTICE

This generator set is not to be the main source of power for communication and steering systems. It can stop without warning.

You must find out which standards for safety are applicable. Compliance with United States Coast Guard (USCG) regulations is mandatory for boats in U.S. waters. The American Boat and Yacht Council (ABYC) and the National Fire Protection Association (NFPA) are typical of U.S. agencies that publish safety standards for the construction and installation of marine equipment. It is suggested that you obtain the following standards:

- USCG regulations are under Titles 33 and 46 of the *Code of Federal Regulations* (CFR),

  U.S. Government Printing Office

  Washington, D.C. 20404.

- NFPA No. 302, *Pleasure and Commercial Motor Craft,*

  National Fire Protection Association

  Batterymarch Park

  Quincy, MA 02269

- *Standards and Recommended Practices For Small Craft,*

  American Boat and Yacht Council, Inc.

  613 Third Street, Suite 10

  Annapolis, MD 21403

Particular attention should be paid to ABYC P-1, *Installation of Exhaust Systems for Propulsion and Auxiliary Machinery;* ABYC E-11, *AC and DC Electrical Systems on Boats;* and ABYC A-27, *Alternating Current (AC) Generator Sets*.

2.3.1 Ignition Protection

NOTICE

The generator set or sets included in this manual are not ignition protected and shall not be used in a flammable vapor environment.

 Copyright © 2022 Cummins Inc.

2.4 Outline Drawings

⚠ WARNING

Improper Installation
Improper installation can result in severe personal injury, death, and equipment damage.
The installer must be qualified to perform installation of electrical and mechanical equipment.

See the applicable outline drawing in the Outline Drawings appendix to check for installation details such as:

- Mounting bolt hole locations
- Connection points (fuel, battery, raw water, exhaust, remote control, AC output)
- Sizes and types of fittings
- Overall dimensions

See your Cummins distributor for large-scale copies of the applicable drawings.

2.5 Noise

Generator sets emit noise. As noise level and time of exposure increase, risk of hearing damage increases. The Model Specifications section includes specific noise level information for these generator sets. Use personal hearing protection appropriate for your exposure to generator set noise.

When used in countries where compliance to the EU Noise directive is required: This generator set has not been evaluated and is not marked for use in open air. Install the generator set in accordance with the Installation Manual. Obey local noise restrictions when you operate the generator set.

2.6 Electromagnetic Compatibility Compliance

Generator sets emit and receive electromagnetic (radio frequency) energy. If the generator set affects operation of nearby devices, or nearby devices affect generator set operation, increase the distance between them.

When used in countries where compliance to the EMC directive is required: This generator set has been evaluated for use in the residential, commercial, and light industrial environments.

Copyright © 2022 Cummins Inc.

3 Location and Mounting

3.1 Installation Location Considerations

The generator set compartment should be located as far from living quarters as practical because of noise, vibration, and fumes. The housing on some models is for reducing noise, not for protection against weather or water. Because of this, be sure to locate the generator set where it is protected from weather and splashing or dripping water.

Make sure there is access for the following (when applicable):

- Starting and stopping the generator set
- Resetting the line circuit breakers, if applicable
- Checking, filling, and draining engine oil
- Changing the engine oil filter
- Checking, filling, and draining engine coolant
- Replacing coolant and exhaust hoses
- Replacing the raw water pump impeller, if applicable
- Replacing the V-belt
- Changing the fuel filter or filters
- Making fuel connections
- Making battery and ground connections
- Making AC connections
- Making remote control connections
- Inspecting the drive belt system and alternator bearing
- Changing engine air filter
- Servicing heat exchanger

Locate the generator set where there is enough room to perform periodic maintenance and service.

3.1.1 Ignition Protection

⚠ WARNING

Gasoline Fumes
The generator set can ignite gasoline fumes causing severe personal injury or death.
Approved methods must be used to isolate the generator set from a gasoline fuel environment.

For generator set that are not ignition protected. It is not permitted under USCG regulation 33CFR183 to be located in a gasoline fuel environment. If the boat has gasoline-fueled propulsion engines, the generator set will have to be located where it can be isolated from the gasoline fuel system by approved methods.

For generator sets that are ignition protected. It is permitted under USCG regulation 33CFR183 to be located in a gasoline fuel environment. All electrical devices such as switches, circuit breakers, meters and control panels used in areas where gasoline vapors can accumulate must be ignition protected.

 Copyright © 2022 Cummins Inc.

3.2 Installation Specifications

Locate the generator set where there will be enough room to perform periodic maintenance and service.

- The front should have at least 100 mm (4 inches) of clearance for air flow in.
- The right side should have at least 50 mm (2 inches) for air flow out.
- Non-service sides should have at least 50 mm (2 inches) of clearance.
- Generator set end with bulkhead connections should have enough clearance to access the inlet and outlet connections.

See **Appendix B on page 67**.

3.3 Lifting the Generator Set

⚠ WARNING

Heavy Load

Incorrect lifting or repositioning can cause severe personal injury or death.

Make sure that only suitably trained and experienced personnel transport and handle generator sets and associated components.

NOTICE

Make sure that correctly rated lifting slings with suitable attachments are available prior to commencing work. Do not exceed the rating of any lifting component. Wear head, eye, hand, and foot protection during lifting operations.

The generator set has one or two lifting eyes on the top of the set, accessible by removing the top access cover or covers of those sets with an enclosure. See the Model Specifications section for the weight of the generator set and make provisions accordingly for safe handling.

- Use both lifting eyes, if so equipped.
- Use proper equipment for safe handling.

Save the steel clamps that secured the generator set to the shipping skid if they are to be used for securing the generator set to the floor or frame of the vehicle.

See the Mounting the Generator Set section.

3.4 Mounting the Generator Set

The generator set has integral vibration isolators. The supporting structure underneath should be level and able to support the weight of the generator set. The floor must extend under the whole base pan for support. Floor or frame stiffness should be greatest under the vibration isolators. The generator set must be secured to the floor.

See the appropriate outline drawing in the Outline Drawings appendix to locate the mounting bolt holes. To reduce noise, plug the unused clamp openings in the drip pan with the four rubber plugs shipped in the literature packet.

Copyright © 2022 Cummins Inc.

4 Mechanical Connections

The generator set mechanical system installation includes connecting the fuel, exhaust, ventilation, and cooling systems. Before starting any type of fuel installation, all pertinent state and local codes must be complied with and the installation must be inspected before the unit is put in service.

4.1 Ventilation

4.1.1 Ventilation of Exhaust System

⚠ WARNING

Exhaust Gas Is Deadly; Fuel Vapors Are Explosive

Failure to provide proper ventilation can result in asphyxiation, fire, and explosion.

Make sure the ventilation system meets applicable standards and regulations, including USCG, NFPA, and ABYC.

Ventilation is required to prevent dangerous concentrations of fuel vapors and exhaust fumes, to hold down compartment temperatures, and to provide combustion air. The highest compartment temperatures can occur just after the boat has been docked and the engines have been shut down. See the Standards of Safety section for additional information.

To promote convection, good air exchange, fresh air for combustion and cooling, and ensure proper engine cooling:

- Ventilating air should enter the air inlet at the front of the compartment near the bottom and exit the air outlet at the rear of the compartment near the top.
- For engine room air flow and ventilation design, refer to the Model Specifications table to find combustion airflow and heat radiated to ambient. For best performance, the engine room temperature should be maintained at 40 °C (104 °F) or less.
- Do not use flush air inlets or louvered transom outlets, which are easily blocked.
- Make sure that the flow of cooling and ventilating air does not recirculate back into the generator set causing further heating of the generator set.
- The main rotor and stator of the generator is air cooled. Measure cooling air temperature at the generator set air inlet. Inlet air temperature should not exceed 50 °C (122 °F) when the generator set is running under full load. The inlet air temperature at the generator set may exceed 50 °C (122 °F) briefly after the main engines have been shut down.

Operating a generator set in ambient temperatures above 40 °C (104 °F) will result in noticeable loss of power. Operating a generator set in ambient temperatures higher than 50 °C (122 °F) will reduce the life of electrical components, alternator windings, rubber, and other construction materials.

4.1.2 Carbon Monoxide (CO)

All openings and feed-through holes for wiring, conduit, pipe, and hose must be sealed to prevent exhaust gases from entering the rest of the boat. Wiring conduit must be sealed inside as well as outside.

Cabin plumbing drains must have approved traps to prevent the entrance of exhaust gases from outside.

Carbon monoxide (CO) detector-alarms, listed for marine applications, must be installed in the living quarters of the boat. Wind shifts, boat motion, exhaust from other boats at dockside, and other conditions can cause exposure to harmful concentrations of carbon monoxide even when proper ventilation is provided and living quarters are sealed off from engine rooms.

 Copyright © 2022 Cummins Inc.

4.2 Fuel

4.2.1 Fuel and Tanks

⚠ WARNING

Combustible Fuel

Diesel fuel is combustible and can cause severe personal injury or death.

Do not smoke near fuel tanks or fuel-burning equipment or in areas sharing ventilation with such equipment.

Keep flames, sparks, pilot flames, electrical arcs and switches, and all other sources of ignition well away. Keep a multiclass fire extinguisher available.

⚠ WARNING

Improper Storage and Handling of Diesel Fuel

Improper storage and handling of diesel fuel can lead to fire causing severe personal injury or death.

Fuel tank construction, location, installation, bonding for grounding, ventilation, piping inspection, and lead testing must be in accordance with applicable standards and regulations, including USCG, NFPA, and ABYC.

NOTICE

Do not use galvanized fuel tanks or piping. The trace of sulfur in diesel fuel attacks galvanized (zinc) coatings causing debris that can clog fuel filters, pumps, and injectors.

See the Model Specifications section for fuel recommendations, see the operator manual for additional information on fuel types, and see the Standards and Safety section for more information on safety regulations.

4.2.2 Fuel Filters

It is recommended that a 10 to 30 micron water-separator fuel filter be installed in the fuel supply system to protect the fuel lift pump.

The generator set may be equipped with a secondary fuel filter, used in conjunction with an auxiliary fuel lift pump. A 50 to 75 micron filter should be installed in the supply line to protect this pump.

4.2.3 Fuel Fittings

Two 1/4-18 NPTF fittings may have been provided for fuel supply and return connections, or a barbed fuel inlet fitting may be mounted on the right side of the drip pan, for use with a 3.2 mm (1/8 in) I.D. fuel fitting. See the Outline Drawings appendix for specific locations, if applicable. Fuel hose adapter fittings are available from Cummins.

Copyright © 2022 Cummins Inc.

4.2.4 Fuel Hoses

⚠ WARNING

Fire Hazard

Fire can result when fuel lines carry cranking current which can cause severe personal injury or death.

Use non-conductive fuel hoses for connections at the generator set to prevent the fuel lines from becoming paths for cranking current.

Use USCG TYPE A1 or ISO 7840-A1 fuel hoses. See Fuel Line Sizing in this section for recommended sizing.

The fuel hoses connected at the generator set must be non-conductive so that the fuel lines do not become paths for cranking current. (Because the fuel tanks are required to be bonded to the common negative (–) grounding system of the boat, conductive fuel lines connected directly to the generator set will carry cranking currents.)

Flexible fuel hoses must be used for connections at the generator set because of the movement allowed by the vibration isolators.

The fuel hoses connected at the generator set can be routed through holes in the sides and bottom of the base. Use the rubber grommets provided to protect the hoses from chafing and seal noise inside when an enclosure is provided. Make sure all of the unused hose and cable entrance and exit holes around the base are capped or sealed.

4.2.5 Fuel Line Sizing

Fuel line size should be chosen such that the total restriction of the fuel lines, fuel fittings, fuel filters, and vertical lift does not exceed what is shown in the Model Specifications section for the specific generator set model.

When appropriate, an inside diameter of 8 mm (5/16 in) is recommended for fuel lines and hoses, and no larger than 9 mm (3/8 in). An inside diameter of 7 mm (1/4 in) should be considered in applications where fuel lines are short and lift is minimal (see the Fuel Lift section). Larger diameter fuel lines are harder to prime and keep primed and are more likely to cause disruption of generator set service.

Run fuel lines as directly as possible avoiding dips and crests that trap air and cause hard priming.

4.2.6 Fuel Pickup Tube

A separate fuel pickup tube and supply line is recommended for the generator set. Shared pickup tubes and distribution manifolds can lead to fuel starvation and difficult priming.

See Fuel Line Sizing in this section for recommended sizing.

In a common fuel supply tank the generator set pickup tubes should be shorter than the propulsion engine pickup tubes to prevent the generator sets from being able to empty the fuel tanks.

Make sure the fuel tanks are large enough to cool the returning fuel and that the supply and return pickup tubes are separated by at least 254 mm (10 in) to reduce the recirculation of hot fuel.

4.2.7 Fuel Shutoff Valves

A fuel shutoff valve is required at the fuel tank if the end of the fuel line is located below the highest level of fuel in the tank in order to prevent accidental discharge of fuel.

An approved method is required to prevent flow when the engine is not running if the highest level of fuel in the supply tank is above the fuel injectors.

 Copyright © 2022 Cummins Inc.

4.2.8 Fuel Lift

The fuel lift pump on the generator set has a maximum inlet restriction. Restriction values are listed in the Model Specifications section. Note that the pump must overcome the resistance to fuel flow in hoses, tubing, fittings, valves, and filters as well as actual lift in elevation.

4.3 Cooling

4.3.1 Cooling System Overview

The engine is cooled by a pressurized closed-loop liquid cooling system in which coolant is pumped through passages in the engine block, head, and exhaust manifold. Heat is carried away from the coolant by a keel cooler or raw water (sea water, flotation water) heat exchanger. A raw water pump is provided if the generator set has a heat exchanger or keel cooler with wet exhaust. See the appropriate outline drawing in the Outline Drawings appendix for connection points and fitting sizes.

The heat exchanger may be mounted inside the exhaust manifold, which also serves as the engine coolant reservoir. Raw water is pumped through tubes in the heat exchanger to cool the engine coolant and then is passed through a hose into the exhaust-water mixer to cool the exhaust gases. The raw water is expelled from the boat along with the exhaust gases.

4.3.2 Raw Water Pump

The raw water pump can deliver the required flow of cooling water against a maximum inlet restriction measured at the raw water inlet connection point to the generator set. See the Model Specifications section for the maximum raw water inlet restriction values.

"Lift" is a combination of the actual vertical lift and the resistance to flow caused by the hoses, strainer, sea cock, and through-hull fitting.

The pump impeller must be wetted with water to establish initial pump lubrication and suction. See the generator set operator manual.

4.3.3 Raw Water Hose

Use SAE 20R4, 20R3 or equivalent hose that is able to resist a vacuum of 30 kPa (4.35 psi) without collapsing. The fitting for the raw water inlet connection varies by model. See the Outline Drawings appendix for hose ID requirements. All of the hoses, pipes, and fittings in the raw water pickup line should have the same internal diameter as the hose connected to the generator set raw water inlet. When an enclosure is installed route the raw water hoses through the holes provided and use grommets to protect the hose from chafing and to seal noise inside.

4.3.4 Raw Water Strainer

The raw water (sea water or flotation water) strainer should be located below and as close to the raw water pump as practical. The basket must be removable for cleaning. The strainer should not allow debris larger than 4.5 mm (3/16 in) to enter the cooling system. If the raw water strainer is above the water line, fill it for faster priming at startup.

4.3.5 Sea Cock

Install a bronze, full-flow sea cock on the through-hull fitting.

Copyright © 2022 Cummins Inc.

4.3.6 Through-hull Fitting and Strainer

NOTICE
Do not use a scoop-type through-hull fitting. A forward-facing scoop can develop enough ram pressure to flood the engine. A rear-facing scoop can develop enough suction to impede flow.

The through-hull fitting should be as close to the generator set as possible. If the strainer has slotted openings, the slots must be parallel to the keel for best flow when the boat is under way. Through-hull fittings should be staggered along the keel so that downstream fittings are not starved.

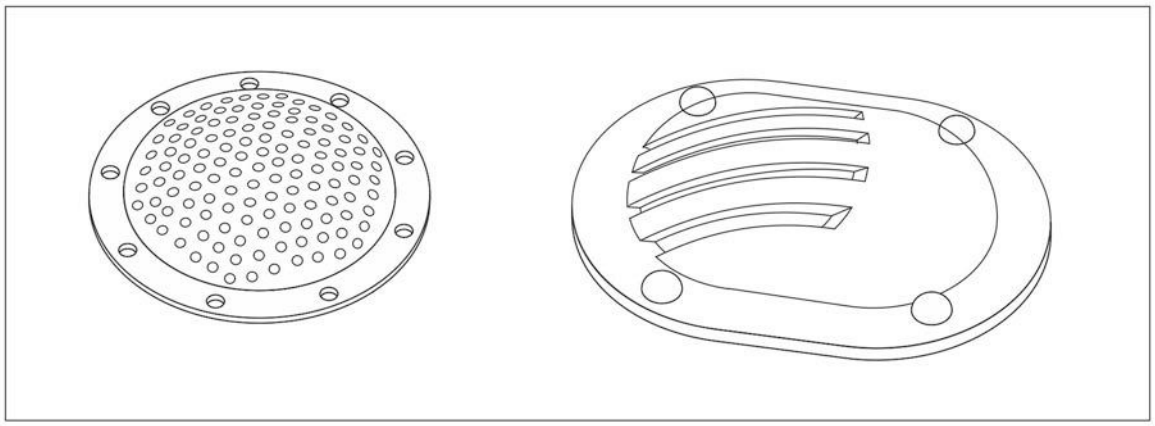

FIGURE 2. RAW WATER STRAINER

4.3.7 Coolant Recovery Tank

NOTICE
Running the engine without coolant can cause damage not covered by warranty.

The coolant recovery tank kit shipped with the generator set must be installed for proper operation of the cooling system. Follow the instructions in the kit.

The tank must be accessible for daily inspection and refilling. The generator set enclosure (if provided) has holes for mounting the tank on either end. For generator sets not provided with an enclosure, mount the tank on a bulkhead within reach of the hoses and slightly above or at the same height as the pressure cap. Make sure the overflow hose terminates in the drip pan where it will not splash coolant on electrical components. Fill the tank in accordance with the Operator Manual.

Initial Coolant Fill - The generator set is normally shipped from the factory with coolant, unless prohibited by shipping regulations. Fill the system, if necessary, in accordance with the Operator Manual.

NOTICE
Keel-cooled generator sets are only partially filled with coolant. Coolant must be added to fill the keel cooler and expansion tank.

 Copyright © 2022 Cummins Inc.

4.3.8 Siphon Break

NOTICE
Engine damage due to flooding as a result of failing to install a required siphon break is not covered by warranty.

Conduct the following Raw Water Pickup Test to determine whether a siphon break is required to prevent the muffler and engine from being flooded with raw water (sea water or flotation water). The top or end panel of an enclosed generator set has knockouts for the hoses to pass through. The hoses in the kit replace the hose between the engine heat exchanger and exhaust-water mixer. A siphon break kit is available from Cummins. It may be found in Accessories Catalog F1379.

To prevent dripping or spray from the siphon break do not mount the siphon break directly above the generator set. If space is available, locate the siphon break at least 305 mm (12 in) away from the generator set or any other equipment in the engine room that should not get wet.

4.3.8.1 Raw Water Pickup Test

Objective: To determine the elevation of the water line relative to the generator set under all anticipated uses and speeds of the boat.

Method: Conduct this test during sea trials in conjunction with the Exhaust Water Separator Backflow Test. When the boat is ready for its sea trials and loaded to its maximum rated capacity:

1. Close the sea cock and disconnect the raw water pickup hose from the generator set. Alternatively, connect a clear plastic hose to the strainer or sea cock.
2. Raise the end of the hose above expected water level and open the sea cock. The water line is at the level visible in the clear plastic hose or where water just begins to spill as the end of the hose is lowered. While the boat is still docked, mark the level on the generator set or enclosure.
3. Operate the boat through its speed range in forward and reverse speeds. While the boat is operating, have someone monitor the water level in the hose and mark the highest level on the generator set.

Requirement: A siphon break must be installed if the siphon point is not at least 152 mm (6 in) above the highest marked water line (docked or moving).

NOTICE
If the water line when the boat is moving is much higher than when the boat is docked, the difference could be due to the through-hull fitting or its location. If the through-hull fitting is of the forward-facing scoop-type designed to create ram pressure, replace it with a flush fitting. Another possibility might be to move the fitting to a location where the dynamic hull pressure is less.

4.3.9 Keel Cooling

When sizing the keel cooler, refer to the Specifications Table **Chapter 8 on page 51** for data regarding pressure cap rating, engine coolant capacity, thermostat opening temperature, coolant flow rate, heat rejection to coolant, and maximum coolant friction head.

4.3.10 Cooling System Illustration

4.3.10.1 Cooling System

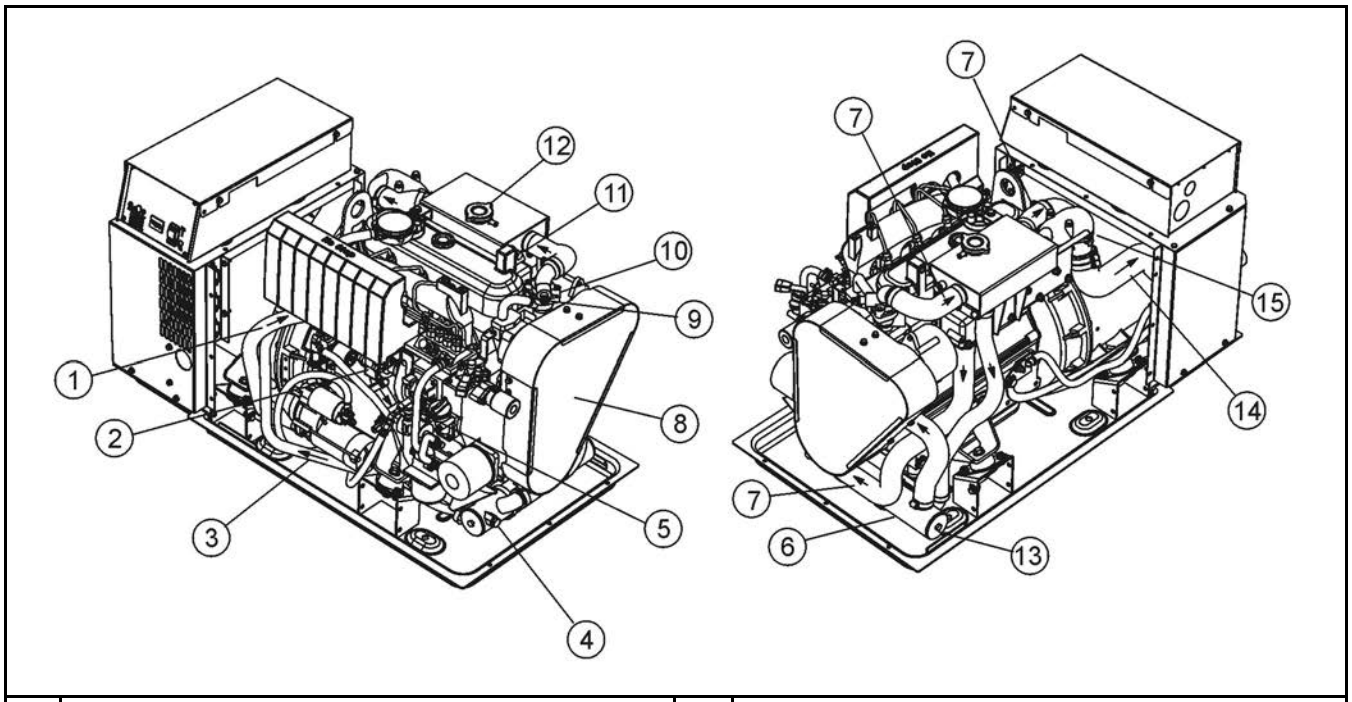

No.	Description	No.	Description
1	Raw Water to Pump from Bulkhead Fitting on Right or Left Side	9	Coolant Temperature Sensor
2	Raw Water Pump	10	Coolant Thermostat Housing
3	Raw Water Hose to Exhaust-Water Mixer - When required, replace with siphon break and connecting hoses	11	Location, Optional Low Coolant Sensor
4	Heat Exchanger with Zinc Anode and Clean Out Covers (both ends)	12	Coolant Reservoir with Pressure Cap and Coolant Fill Neck - Fill Neck has Hose Barb for Connecting Coolant Recovery Tank
5	Location, Block Drain Valve (Coolant)	13	Raw Water Cleanout Cover (Both Ends - Make Sure to Reconnect Ground Strap on This End with Cover Screw)
6	Coolant Drain Valve Raw Water Plugs (Underneath)	14	Exhaust and Raw Water Out to Bulkhead Fitting on Right or Left Side
7	Coolant Flow	15	Exhaust-Water Mixer with High Temperature Exhaust Switch
8	Coolant Pump Pulley		

FIGURE 3. MDKDP, MDKDR, AND MDKDV

 Copyright © 2022 Cummins Inc.

4.3.10.2 Cooling System

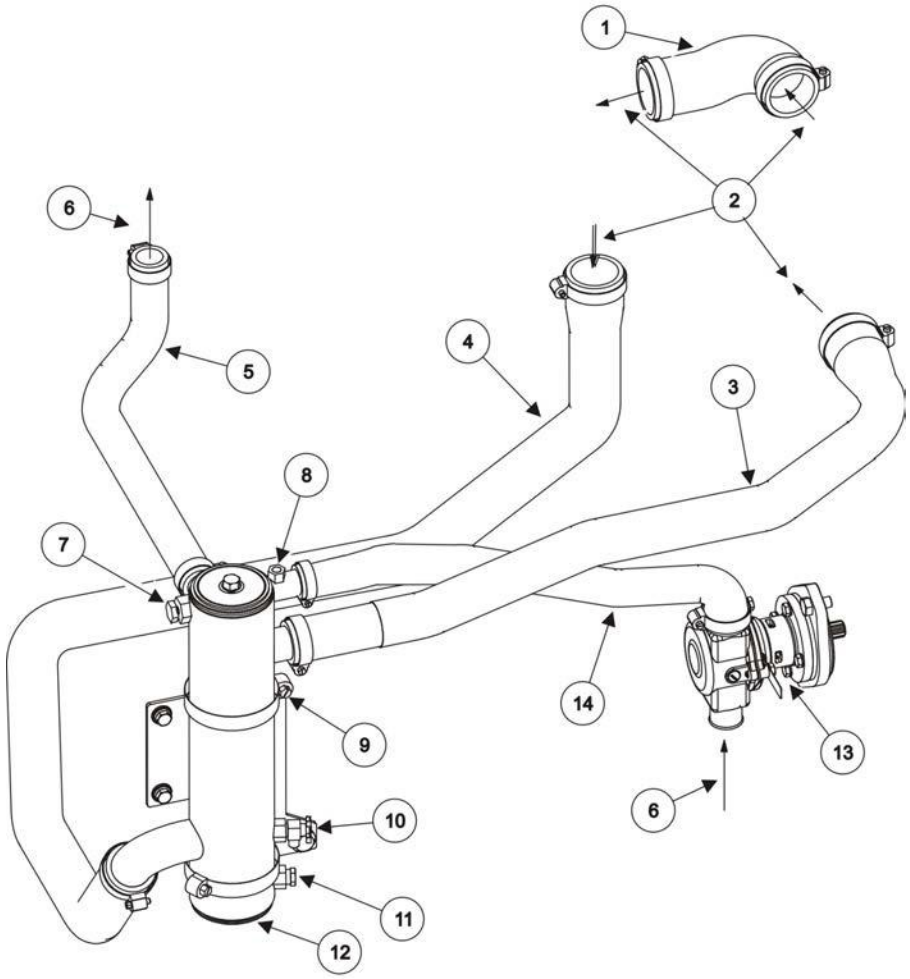

No.	Description	No.	Description
1	Hose, Thermostat to Coolant Reservoir	8	Raw Water Flow Switch
2	Coolant Flow	9	Heat Exchanger Mounting Straps (2) Torque to 11 Nm (8 ft-lb)
3	Hose, Heat Exchanger to Coolant Pump	10	Coolant Drain Valve
4	Hose, Coolant Reservoir to Heat Exchanger	11	Raw Water Drain Plug
5	Hose, Raw Water to Exhaust-Water Mixer - Replace hose with siphon break and connecting hoses when required - For dry exhaust replace with hose to hull fitting.	12	Heat Exchanger with Cleanout Covers (both ends)
6	Raw Water Flow	13	Raw Water Pump
7	Zinc Anode	14	Hose, Raw Water Pump to Heat Exchanger

FIGURE 4. MDKDS, MDKDT AND MDKDU

4.4 Exhaust System

4.4.1 Wet Exhaust Systems

⚠ WARNING

Toxic Gases

Substances in exhaust gases have been identified by some state and federal agencies to cause cancer or reproductive toxicity.

Do not breathe in or come into contact with exhaust gases.

⚠ WARNING

Toxic Gases

Breathing in exhaust gases can cause serious personal injury or death.

The exhaust system must be leak-free and convey all exhaust outside, away from windows, doors, and vents.

See the Exhaust System Illustration(s) section for figures showing a typical installation of a wet exhaust system. See the Cooling section regarding raw water connections. The installation must comply with applicable standards and regulations, including those of the USCG and ABYC.

A separate engine exhaust system must be installed for each generator set. It must be isolated from all other engine exhaust systems. Do not "T" into any other engine exhaust system. Run the exhaust piping all the way to the hull and terminate it flush with or extended slightly from the outside of the hull.

Mufflers, water separators, and siphon breaks are available as kits.

4.4.1.1 Hose and Hose Fittings

No hose or hose fitting in the exhaust system may have a smaller inside diameter than the engine outlet. If the total run of exhaust hose is more than 6 m (20 ft), measure exhaust back pressure and use larger diameter hose if back pressure exceeds specifications. See the Model Specifications section .

4.4.1.2 Exhaust Hose

Use hose that has been approved for wet exhaust systems. Approved hose and stainless steel elbows are available from Cummins . Horizontal runs of hose must slope down at least 42 mm per meter (1/2 in per foot) and be supported such that there are no sags. The entire run of hose must be accessible for regular visual inspections and replacement.

4.4.1.3 Hose Clamps

Use two stainless steel hose clamps at least 12.7 mm (1/2 in) wide to clamp each end of each hose.

4.4.1.4 Muffler

Install an approved muffler as close as practical to the engine. For optimum silencing, the length of hose between the engine and muffler should not exceed 2 m (6 ft) The muffler inlet should be a minimum of 305 mm (12 in) below the exhaust-water mixer and the outlet should be vertical to a water separator or elbow that turns down sharply.

When installing a water separator or fabricating a knee, the base of the muffler should not be more than 1.4 m (54 in) below the water separator or 1.2 m (48 in) below the knee in the piping (see the Exhaust System Illustration(s) section).

Mount the muffler such that air can circulate underneath to prevent condensation and mold. On unhoused generator sets, provide at least 305 mm (12 in) of free exhaust hose to absorb vibration.

 Copyright © 2022 Cummins Inc.

4.4.1.5 Exhaust Water Separator

When an exhaust water separator is used the muffler outlet and water separator inlet diameters must be the same size. See the Exhaust System Illustration(s) section. The water separator should be installed directly above the muffler to maintain a vertical lift. The through-hull fitting for the drain hose should be below the load water line, but not more than 152 mm (6 in), and must have a sea cock. The Exhaust Water Separator Backflow Test must be conducted during the sea trials to determine that there is no backflow that could flood the engine.

4.4.1.6 Exhaust Through-Hull Fitting

NOTICE
Backflow can cause major engine damage if the cylinders become flooded. The sea trials must verify that there is no backflow through either the exhaust hull fitting or the water separator drain hose fitting.

The exhaust through-hull fitting must be above the load water line under all anticipated uses and speeds of the boat. To reduce wave wash-in when a water separator is used the top of the water separator must be at least 450 mm (18 in) above the load water line. When an elbow is used at the top of the muffler outlet hose, the elbow must be at least 305 mm (12 in) above the through-hull fitting. See the Exhaust System Illustration(s) section.

4.4.1.7 Exhaust Water Separator Backflow Test

Objective: To determine that there is no backflow through the exhaust water separator under any operating conditions. See the Exhaust System Illustration(s) section for a sample drawing of the exhaust water separator system.

Method: Conduct this test during the sea trials in conjunction with the Raw Water Pickup Test found in the Cooling section. When the boat is ready for its sea trials and loaded to its maximum rated capacity:

1. Prepare by closing the drain hose sea cock and disconnecting the hose from the water separator.
2. Conduct the test by opening the sea cock while keeping the hose raised to its fitting on the water separator.

Requirement: There must not be any backflow while operating the boat throughout its speed range. If there is, relocate the through-hull fitting.

4.4.2 Dry Exhaust Systems

NOTICE
Corrosive exhaust vapors, soot, and high gas temperatures can migrate through a shared exhaust system and cause damage to idle engines. Provide a separate exhaust system for each engine.

NOTICE
Excessive exhaust back pressure can result in reduced power, smoke, high exhaust temperature, and reduced engine life.

A separate exhaust system must be provided for each engine. It must be isolated from all other engine exhaust systems. Do not "T" into any other engine exhaust system. Run the exhaust piping all the way to the hull and terminate it flush with or extended slightly from the outside of the hull (see Exhaust System Illustrations at the end of this chapter for schematic).

Copyright © 2022 Cummins Inc.

To reduce the risk of contact with hot surfaces, fire risk from ruptured fuel lines, and ignitions of flammable materials, the generator set exhaust system shall be installed in accordance with the safety objective of EN 12601.

- The exhaust system must be supported independently of the engine. Supporting the weight of exhaust piping at the turbocharger outlet, if so equipped, can lead to turbocharger failure.
- To prevent burns, shield or insulate exhaust piping and mufflers where accidental contact is likely. If the surface temperature of the shield or insulation exceeds 80° C (176° F) for metallic parts or 94° C (201° F) for non-metallic parts, a warning needs to be placed on or near the shield or insulation. Additionally, the temperature of all surfaces of the exhaust system must not exceed 93° C (199° F). This includes surfaces exposed to the risk of fire due to contact with flammable materials and shields or insulation.
- To prevent overheating that can lead to fire, route exhaust piping at least 229 mm (9 inches) away from combustible construction. Where a 229 mm (9 inch) clearance cannot be maintained, the pipe may be insulated with material rated to withstand at least 538° C (1000° F).
- A flexible, bellows-type stainless steel section at least 300 mm (18 inches) long must be connected at the engine exhaust outlet to take up thermal expansion and engine movement.
- Long runs of exhaust pipe (vertical or horizontal) should include a flexible bellows-type stainless steel section to take up thermal expansion. Flexible exhaust sections must not be used to compensate for misaligned piping or for forming bends.
- Horizontal runs of exhaust piping should slope downwards from the engine to a drain trap and plug, which should be located where the piping turns to rise vertically.
- The entire exhaust system must be accessible for regular visual inspection and repair.
- It is recommended that anti-seize compound be applied to all joints for easier disassembly and repair.

See **Chapter 8 on page 51** for maximum allowable exhaust back pressure.

 Copyright © 2022 Cummins Inc.

4.4.3 Exhaust System Illustration

4.4.3.1 Wet Exhaust System with Resonator

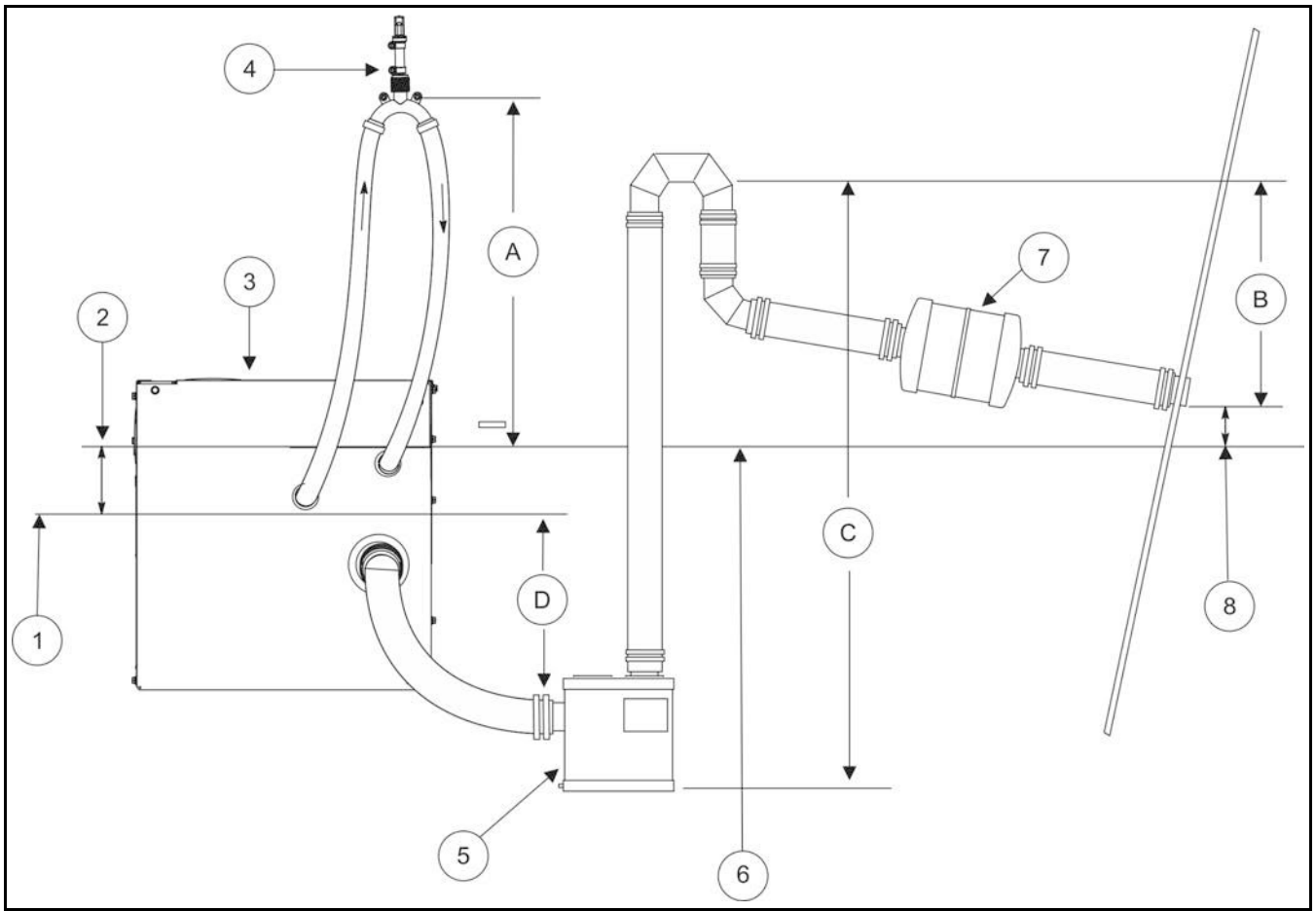

No.	Description	No.	Description
1	Siphon Point	7	Optional Resonator
2	Siphon Break*	8	Must Be Above Waterline
3	Generator Set	A	305 mm (12 inch) Minimum
4	Siphon Break Valve	B	305 mm (12 inch) Minimum
5	Muffler	C	1.2 M (48 inch) Maximum
6	Load Waterline	D	305 mm (12 inch) Minimum

*Required when the siphon point is below or less than 152 mm (6 in) above the water line.

FIGURE 5. TYPICAL WET EXHAUST SYSTEM WITH RESONATOR

4.4.3.2 Wet Exhaust System with Water Separator

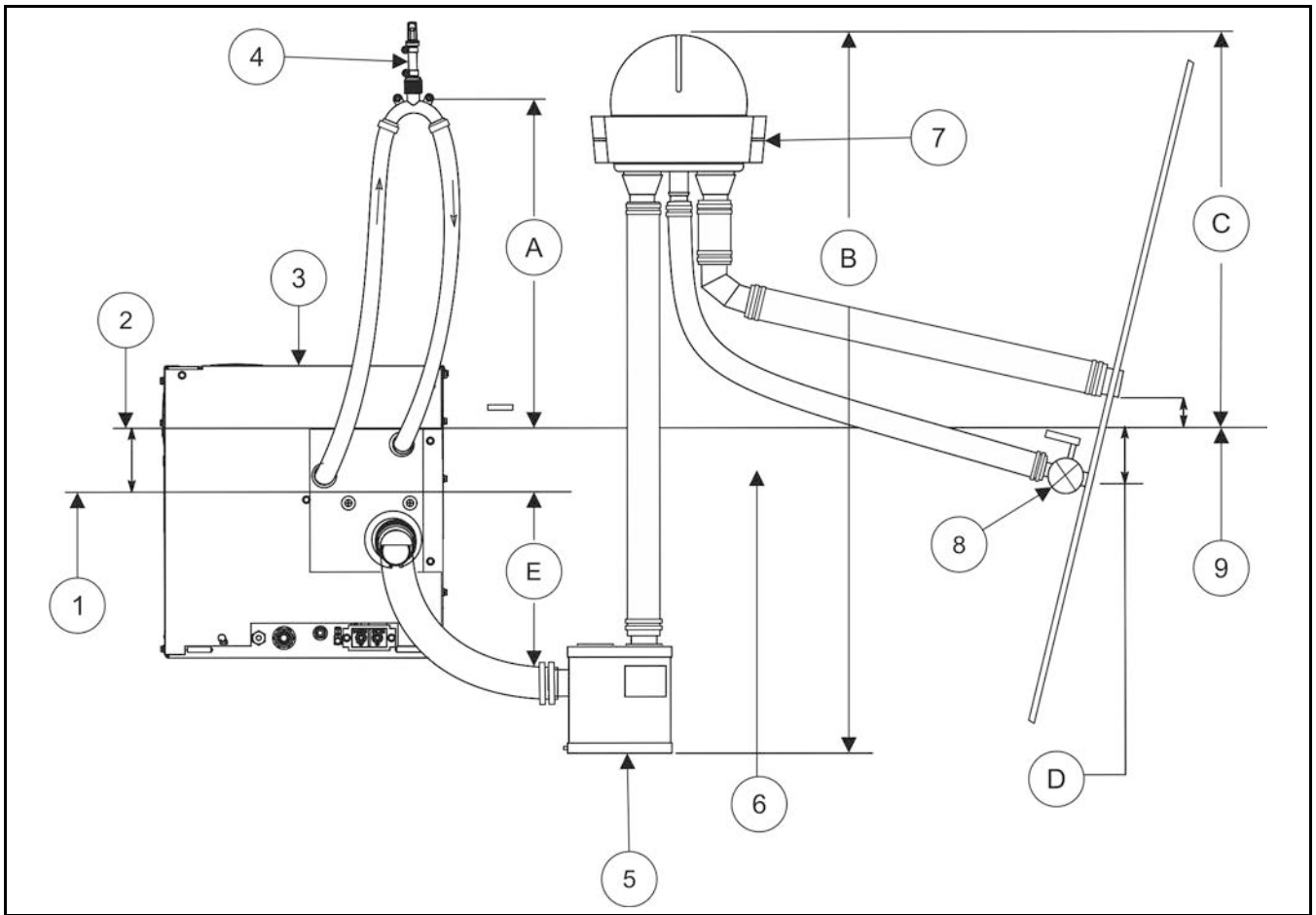

No.	Description	No.	Description
1	Siphon Point	8	Sea Cock
2	Siphon Break*	9	Must Be Above Waterline
3	Generator Set	A	305 mm (12 inch) Minimum
4	Siphon Break Valve	B	1.4 M (54 inch) Maximum
5	Muffler	C	457 mm (18 inch) Minimum
6	Load Waterline	D	152 mm (6 inch) Maximum
7	Water Separator	E	305 mm (12 inch) Minimum
*Required when the siphon point is below or less than 152 mm (6 in) above the water line.			

FIGURE 6. TYPICAL WET EXHAUST SYSTEM WITH WATER SEPARATOR

 Copyright © 2022 Cummins Inc.

4.4.3.3 Dry Exhaust System

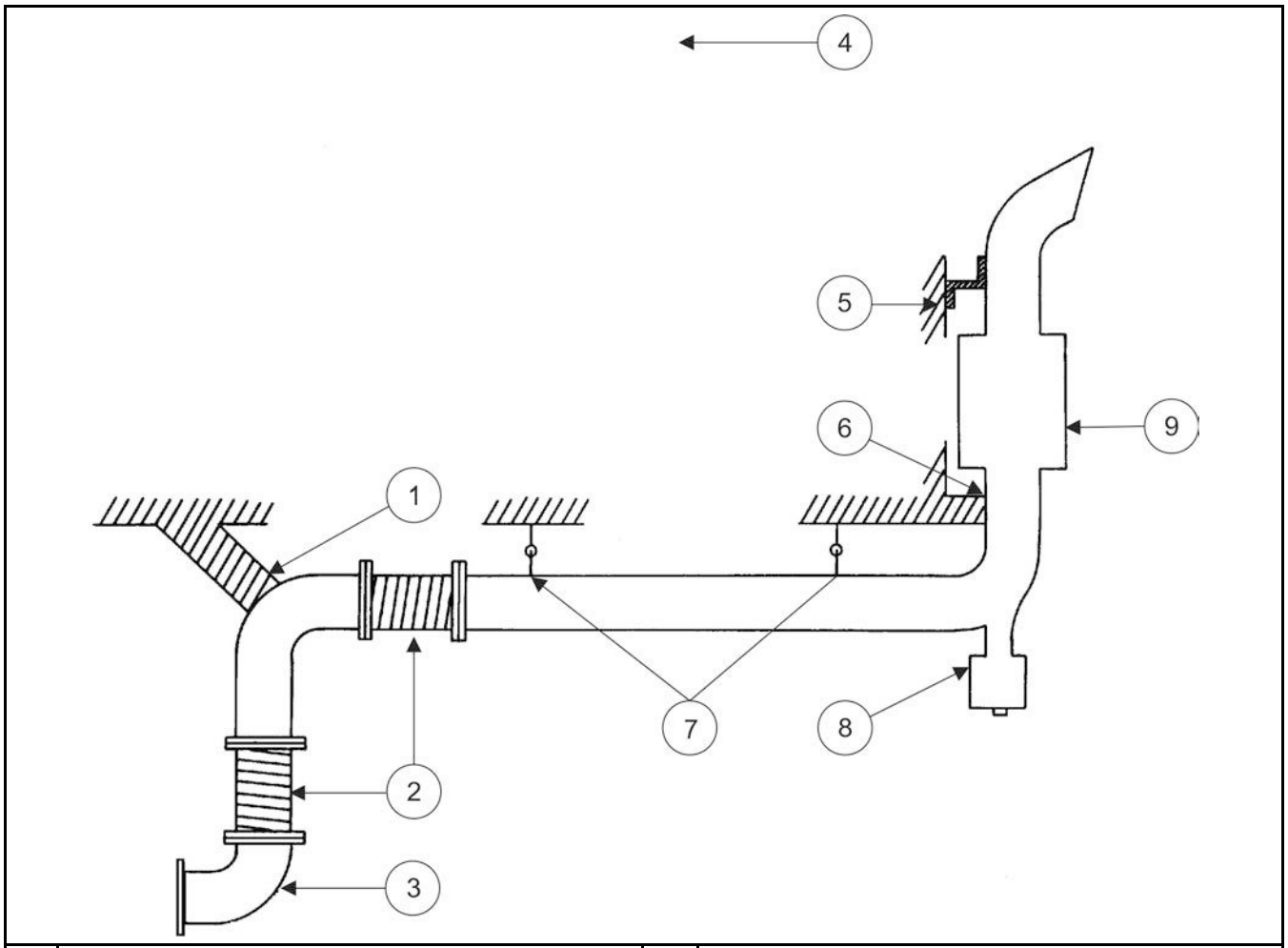

No.	Description	No.	Description
1	Rigid Support	6	Rigid Support
2	Flexible Pipe	7	Flexible Supports
3	Dry Exhaust Elbow at Generator Set	8	Condensate Drain Trap
4	Bow of Vessel	9	Muffler
5	Flexible Support		

FIGURE 7. TYPICAL DRY EXHAUST SYSTEM

5 Electrical Connections

5.1 AC Connections

⚠ WARNING

Hazardous Voltage

Touching uninsulated live parts inside the generator set and connected equipment can result in severe personal injury or death.

For your protection, stand on a dry wooden platform or rubber insulating mat, make sure your clothing and shoes are dry, remove jewelry from your hands, and use tools with insulated handles. Secure protective covers when completing installation.

⚠ WARNING

Electrical Shock and Fire

Improper wiring can cause fire or electrical shock resulting in severe personal injury or death.

Only trained and experienced service personnel with knowledge of fuels, electricity, and machinery hazards should perform installation procedures. Review the Safety Precautions section of this manual.

⚠ WARNING

Automated Machinery

Accidental or remote starting of the generator set can cause severe personal injury or death.

Isolate all auxiliary supplies and use an insulated wrench to disconnect the starting battery cables (negative [–] first).

5.1.1 Wiring Methods

⚠ WARNING

Toxic Hazard

Carbon monoxide gas is deadly and can cause asphyxiation or death.

All feed-through holes in decks and bulkheads for wiring must be sealed to prevent carbon monoxide (CO) and flammable vapors from entering the living spaces of the boat.

All wiring methods, connections, wire current capacity, equipment grounding, and materials must be inspected and comply with applicable regulations. Use flexible conduit and stranded conductors for AC output connections to take up movement and vibration.

The AC output cables can be routed through holes in the sides and bottom of the base. Use rubber grommets to protect the cables from chafing which also function to seal noise inside when an enclosure is provided. Make sure all of the unused hose and cable entrance and exit holes around the base are capped or sealed. Wiring conduit must be sealed inside as well as outside.

 Copyright © 2022 Cummins Inc.

5.1.2 Alternator Connections

Make alternator AC output connections or reconnections as required in the AC output box in accordance with the appropriate alternator connection diagram in the Wiring Diagrams appendix. See the Outline Drawings appendix for connection locations, and knockout sizes and locations.

If voltage reconnections are made, the circuit breakers may need to be replaced to obtain the required protection or full generator set power. Voltage may need to be readjusted also. See the Adjusting the AC Output Voltage section.

5.1.3 Grounding

⚠ WARNING

Fire and Electric Shook

Faulty grounding of electrical equipment can lead to fire or electric shock resulting in severe personal injury or death.

Grounding must be accomplished in accordance with applicable regulations and standards.

Do not confuse DC electrical system isolation with AC neutral isolation. Some marine generator sets are supplied with an isolated DC electrical system for use in steel and aluminum hull vessels (often referred to as "isolated ground" generator sets). When the Isolated DC ground option is specified, the DC negative (B–) battery connection is not connected directly to the engine block, but is on a separate isolated post. The wiring harness connects all accessories to B– at this isolated post. On some generator set models, there is a relay that momentarily connects B– to the engine block during starting to allow short term operation of glow plugs and the starter cranking motor via a ground path through the block. All generator sets, independent of AC and DC ground method, should be bonded to the vessel bond via the generator set bond stud, per applicable regulations.

Cummins marine generator sets of 32 kW and below include an internal ground of the AC neutral as standard, with isolated AC neutral as an option. The AC neutral leads in the AC connection box are attached to either a bonded ground stud (grounded AC neutral) or an isolator (isolated AC neutral). All marine generator sets above 32 kW are supplied with an isolated AC neutral. For generator sets above 32 kW, the installer must externally ground the AC neutral per applicable regulations and vessel installation wiring instructions.

The generator set, power supply wiring, and all connected electrical equipment must be bonded to the common grounding system of the boat in accordance with applicable regulations.

All generator sets, independent of AC and DC ground method, should be bonded to the vessel bond via the generator set bond stud, per applicable regulations.

5.1.4 Transfer Switch

⚠ WARNING

Electrocution

Incorrect connection of the generator set and shore power can cause severe personal injury and equipment damage.

Use an approved switching device to prevent interconnections.

When the boat has provisions for connection to shore power, the generator set must be connected to the boat electrical system through an approved transfer switch to prevent backfeed.

5.1.5 Load Balancing

The electrical loads on the generator set should be balanced as closely as possible between the AC output phases so that maximum power can be utilized. Redistribute the loads as necessary.

5.2 Battery Connections

⚠ WARNING

Accidental or remote starting of the generator set

Accidental or remote starting of the generator set can cause severe personal injury or death.

To prevent unintended starting, do not connect the starting battery until it is time to start the generator set.

The DC voltage rating for the generator set control and engine cranking is on the generator set nameplate. Depending on model, the generator set requires negative (–) ground 12 VDC or 24 VDC for its control and cranking systems. Some models are equipped for applications requiring an isolated ground. A kit is available for isolated DC ground systems.

5.2.1 Batteries

See the Model Specifications section for recommended battery capacity.

5.2.2 Battery Location and Mounting

⚠ WARNING

Arcing

Arcing can ignite the explosive hydrogen gas given off by the battery, causing severe personal injury.

The battery compartment must be ventilated and isolated from spark-producing equipment.

Locate the battery where spills and leaks will not drip acid on fuel lines, wiring, or other equipment and where ventilation is adequate to prevent the accumulation of explosive gas. Secure the battery so that it cannot shift. Provide an insulating boot for the positive (+) terminal to protect against accidental contact.

5.2.3 Battery Cables

⚠ WARNING

Sparks

Sparks can ignite fuel leading to severe personal injury or death.

Do not run battery cables and fuel lines together. Separate all cables and fuel lines with conduit or tubing if they are run through the same opening. Do not tie them together.

Size the battery cables according to the table below. The total cable length is the sum of the lengths of the positive (+) and negative (–) cables, which will be approximately twice the distance between the battery and the generator set. If required cable distance is between two of the table cable lengths, use corresponding cable gauge of longer table cable length.

 Copyright © 2022 Cummins Inc.

TABLE 1. BATTERY CABLE GAUGES

Total Cable Length, Feet (Meters)	Cable Gauge	
	AWG	Approximate Diameter (mm)*
10 (3)	4	5.88
14 (4.3)	3	6.61
18 (5.5)	2	7.42
22 (6.7)	1	9.43
30 (9.1)	1/0	9.46
* Minimum diameter when using metric gauge cables.		

See the Outline Drawings appendix for the appropriate drawing for battery cable terminal locations.

Provide an insulating boot for the positive (+) terminal to protect against accidental contact.

5.2.4 Battery Recharging

See the Model Specifications section for battery charging capacity of the engine-driven battery charging alternator.

5.3 Generator Set Ground (Vessel Bond)

⚠ WARNING

Faulty Bonding

Faulty bonding of the generator set to the common grounding system of the boat can result in severe personal injury or death.

The generator set must be bonded to the common grounding system of the boat in accordance with applicable regulations.

See the Outline Drawings appendix for connection location.

5.4 Remote Control Connector

Connector J4 for remote control connections is located inside the control box. It mates with a Deutsch® 8-pin sealed connector plug.

1. Remove and discard the solid rubber slot plug (not the one with the round plastic insert). See the appropriate outline drawing in the Outline Drawings appendix.
2. Pull the connector out.
3. Fit a wire grommet into the slot.
4. Secure the access cover.
5. Remove the protective cap over the connector pins.
6. Join the connector and its mate from the Cummins digital display and/or remote switch and meters.

Copyright © 2022 Cummins Inc.

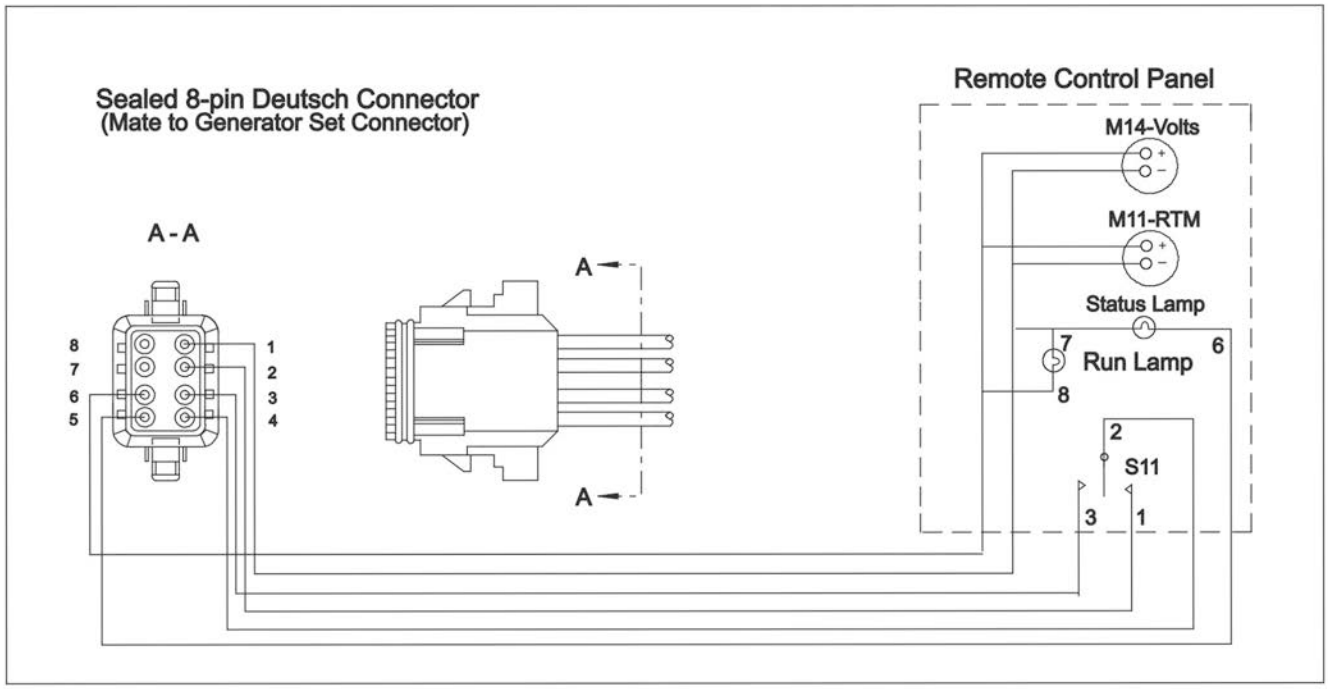

FIGURE 8. CONNECTIONS BETWEEN REMOTE PANEL AND ITS 8-PIN CONNECTOR

5.4.1 Connector Designations

The J4 connector is for remote connections when the optional Network Interface Module (NIM) is mounted inside the generator set control box. The J3 connector is for remote connections when the *e*-Series Digital Display is mounted on the generator set control box. See the Wiring Diagrams appendix for connection locations.

5.4.2 Cummins Digital Displays

Up to 3 digital displays may be connected for remote control and monitoring of the generator set. Follow the installation instructions in the kit.

Kits may also available to replace the generator set control switch panel with a digital display panel or to replace a digital display with a control switch panel.

5.4.3 Remote Control Switch and Meter

- Cummins remote control panel kits: Remote control panels with a control switch or control switch and hour meter are available as kits. Follow the installation instructions in the kit.
- Non-Cummins (customer-supplied) remote control panels: Refer to the Wiring Diagrams appendix to select and connect the remote control panel components. Use momentary-contact switches for starting and stopping.

 Copyright © 2022 Cummins Inc.

5.4.4 Remote Control Wiring Harnesses

⚠ WARNING

Toxic Hazard

Carbon monoxide gas is deadly and can cause asphyxiation or death.

All feed-through holes in decks and bulkheads for wiring must be sealed to prevent carbon monoxide (CO) and flammable vapors from entering the living spaces of the boat.

NOTICE

Remote Control Wiring If remote control wiring is routed near AC wiring, AC can induce false signals that can cause erratic operation of the generator set. Route remote control wiring away from AC wiring.

- Cummins harnesses: 8-conductor plug-in wiring harnesses of various lengths are available for connecting digital displays and (or) remote switch panels. "Y" harnesses are also available for applications requiring more than one remote control station.
- Non-Cummins (customer-supplied) harnesses: Use 16 AWG wiring. For harnesses 14 to 46 m (45 to 150 ft) long, use 14 AWG wiring at connector pins 2, 3, and 4.

5.5 External Shutdown Devices

The generator set control box has factory jumpered leads with quick-connect terminals labeled SWB+, ESTOP and CO for connecting external generator set shutdown devices. Connect ESTOP to an emergency shut down system, such as for fire suppression, and CO to a CO detector. The generator set will stop running if the circuit is opened between SWB+ and either of the other two connectors, ESTOP or CO. Therefore use normally-closed (NC) shutdown devices.

NOTICE

The total load on SWB+ must not exceed 0.5 amps.

5.5.1 Factory Jumpers

The generator set leaves the factory with SWB+ jumpered to the other two connectors, ESTOP and CO.

NOTICE

The generator set will not run if the jumpers are not connected. Leave the jumpers connected when no external shutdown devices are to be connected.

5.5.2 Wiring Grommet and Strain Relief

- Remove and discard the round plastic plug next to the access cover.
- Push the external wires and conduit through a customer supplied strain relief grommet before making connections.
- Use wire ties to provide additional strain relief for the external leads.
- Secure the access cover when connections have been made.

Copyright © 2022 Cummins Inc.

5.5.3 Shutdown Indication

If shutdown occurs due to either device, the Cummins digital displays will display, respectively, Code 5 (Warning - Shutdown due to Vessel CO) or Code 61 (Emergency Shutdown).

See the Troubleshooting section of the operator manual for more information.

NOTICE
All of the status indicator lights in the control circuit will also flash the fault code.

5.5.4 Option H647

Models with Option H647 have a relay and connector (J14/P14) for connection to the external customer circuits. Leave connector P14 connected if an external connection is not made, otherwise the generator set cannot run.

5.5.4.1 Auxiliary Engine Shutdown

Pins 1 and 2 are provided to enable engine shutdown by means of an external shutdown device. The device must open the circuit to cause shutdown.

5.5.4.2 CO Detector Shutdown

Remove the jumper across pins 1 and 3 and connect the remote CO detection and shutdown circuit. The device must have normally closed (NC) contacts. The combined maximum load of the CO and external stop devices must not exceed 0.5 amps.

Leave the jumper across pins 1 and 3 in place if a CO detector is not to be connected, otherwise the generator set will not run.

The digital display will show **Shutdown Due to Vessel CO (Code No. 5)** if the CO detector causes shutdown. See the Operator Manual.

5.6 Network Interface Module (NIM)

The optional NIM board has an open 12-pin connector socket for external network connections that mates with a Deutsch® 12-pin sealed connector plug, part number DT06-12S. See the figure below for the NIM board mounting location.

See the Wiring Diagrams appendix for connection information.

NOTICE
For more information on SAE 1939 applications see your Cummins distributor. Cummins publication D-3315, *Supported Messages on SAE J1939*, must be used in designing the interface for monitoring generator set status and diagnostics.

NOTICE
For more information on SmartCraft™ applications see your Cummins MerCruiser Distributor.

 Copyright © 2022 Cummins Inc.

5.6.1 NIM Mounting Location

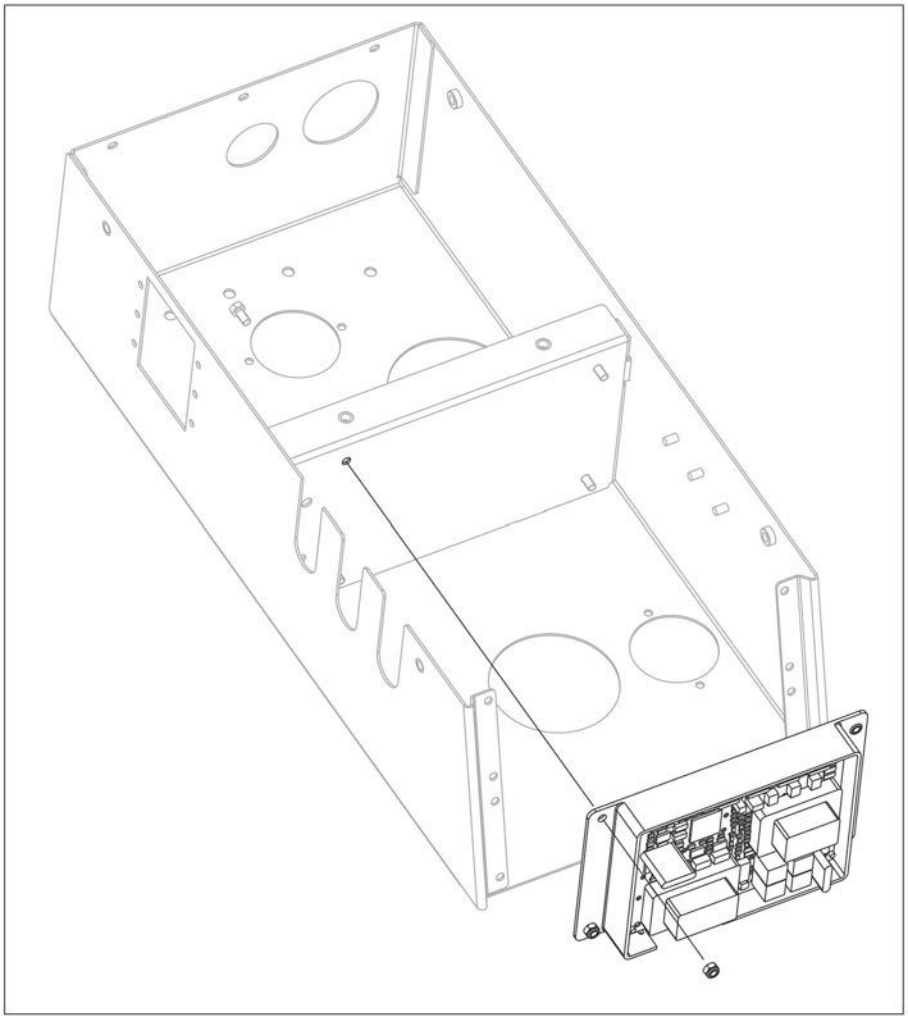

FIGURE 9. NIM MOUNTING LOCATION

5.6.2 NIM Configuration Jumpers

The NIM board has 5 jumpers to configure the board for the specific application, as shown below.

1. Jumper W1 has no function at this time.
2. Jumper W2 will be cut when the generator set is ordered for an SAE J1939 or NMEA 2000™ network application. The jumper must remain uncut when the generator set is ordered for a SmartCraft™ network application.
3. Jumpers W3 and W4 are used to assign the network addresses of the generator sets in a multiple-generator set installation. To assign an address, cut the jumpers as shown below.

TABLE 2. J1939 ADDRESSES

Jumper W3	Jumper W4	Address
Not Cut	Not Cut	234
Not Cut	Cut	158
Cut	Not Cut	179
Cut	Cut	203

4. Cut Jumper W5 if the bus termination resistor on this NIM board is not required to terminate the network bus. (The jumper is cut on a SmartCraft™ board.)

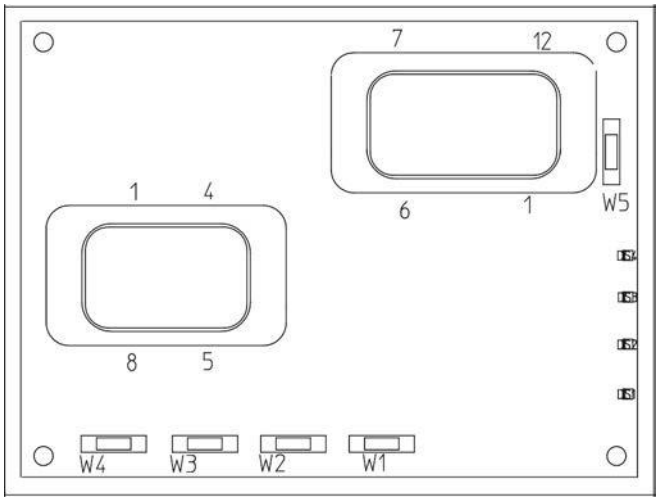

FIGURE 10. NIM CONFIGURATION JUMPERS

5.7 NMEA 2000 Network Protocol

The figure below shows the connection for the optional NMEA 2000™ communication protocol on the generator set. For more information, see the installation instructions in the kit.

NOTICE
The generator data on the NMEA 2000 network has been set with an instance value of 10, as shipped from the factory. In order to view the generator data over the NMEA 2000 network, applicable displays and gauges will need to be set to read the generator data on instance 10.

 Copyright © 2022 Cummins Inc.

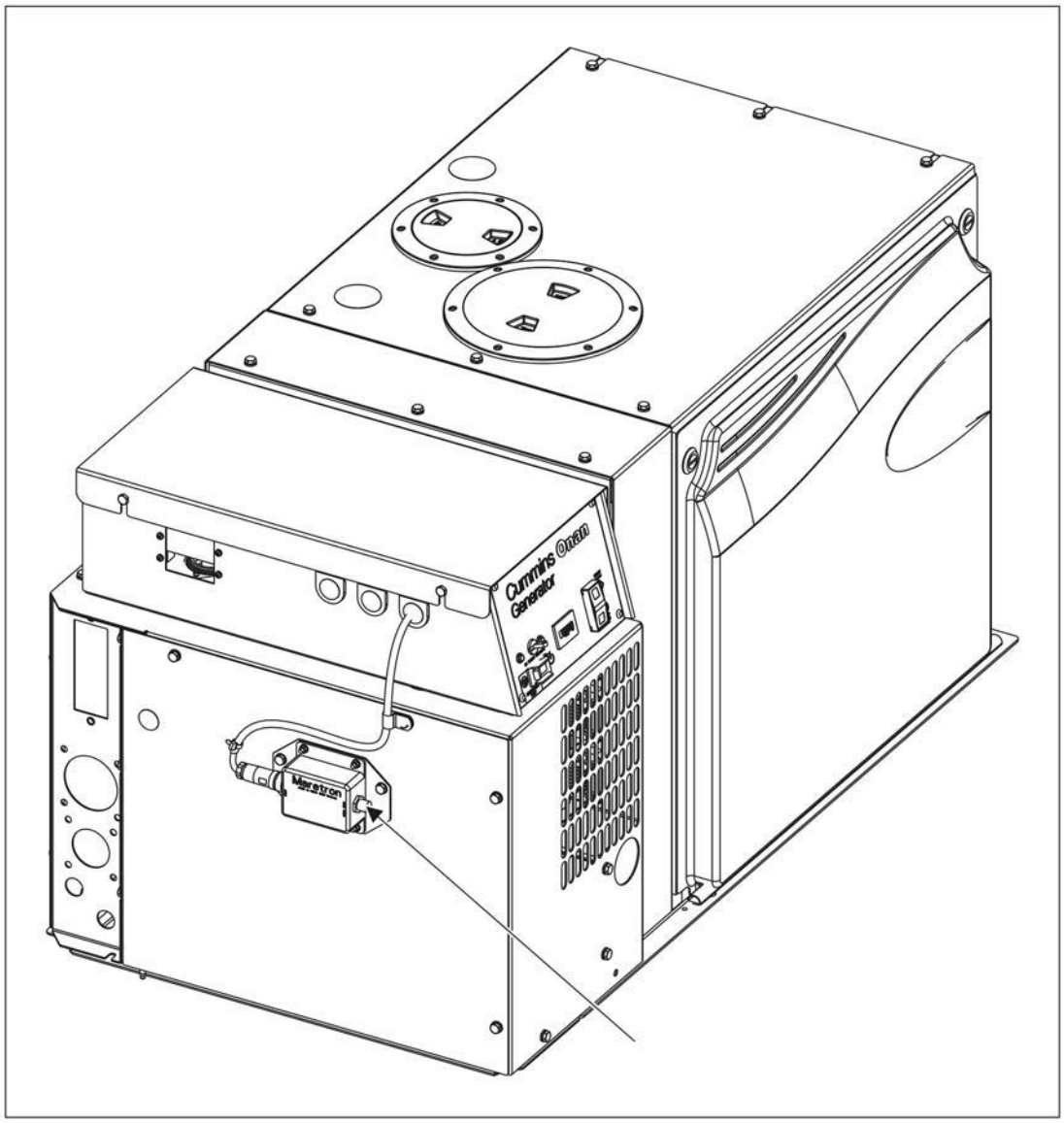

FIGURE 11. NMEA 2000 CUSTOMER CONNECTION

6 Adjusting AC Output Voltage

6.1 Reconnecting Generator

⚠ WARNING

Accidental or Remote Starting

Accidental or remote starting can cause severe personal injury or death.

Before removing a panel or access door, or before working on the generator set, use an insulated wrench to disconnect the negative (-) cable from the battery to prevent accidental starting.

NOTICE

Any attempt to change frequency on an EPA certified generator set will void the warranty, cause the generator set to be out of compliance, and may cause damage to the engine.

If necessary:

1. Reconnect the generator for the application voltage in accordance with the appropriate generator connection schematic (see **Appendix A on page 61**).
2. Apply the appropriate reconnection label.
3. Adjust voltage if necessary.

NOTICE

It may be necessary to change circuit breakers to provide required protection or full generator set power when reconnecting the generator.

6.1.1 Reconnection Label

The generator set manuals were shipped with a sheet of peel-off reconnection labels (**Figure 13**) to apply to the generator set nameplate (**Figure 12**) when reconfiguring the generator set for the application. Apply the appropriate label if different from the original data block.

 Copyright © 2022 Cummins Inc.

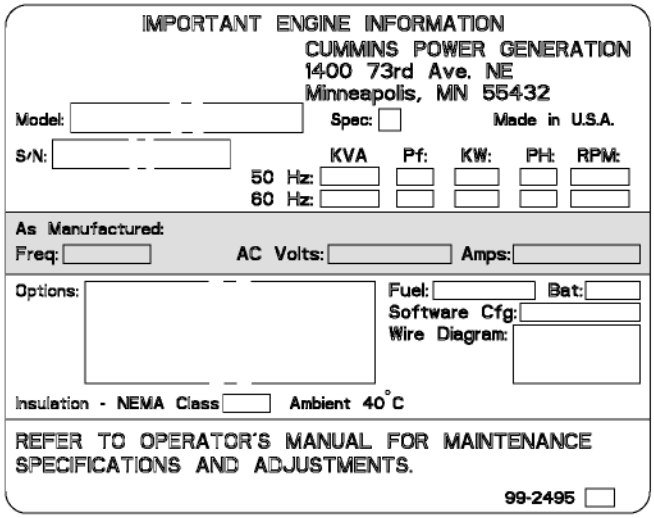
IMPORTANT ENGINE INFORMATION
CUMMINS POWER GENERATION
1400 73rd Ave. NE
Minneapolis, MN 55432
Model:
Spec:
Made in U.S.A.
S/N:
KVA Pf: KW: PH: RPM:
50 Hz:
60 Hz:
As Manufactured:
Freq:
AC Volts:
Amps:
Options:
Fuel:
Bat:
Software Cfg:
Wire Diagram:
Insulation - NEMA Class
Ambient 40°C
REFER TO OPERATOR'S MANUAL FOR MAINTENANCE SPECIFICATIONS AND ADJUSTMENTS.
99-2495

FIGURE 12. ORIGINAL NAMEPLATE

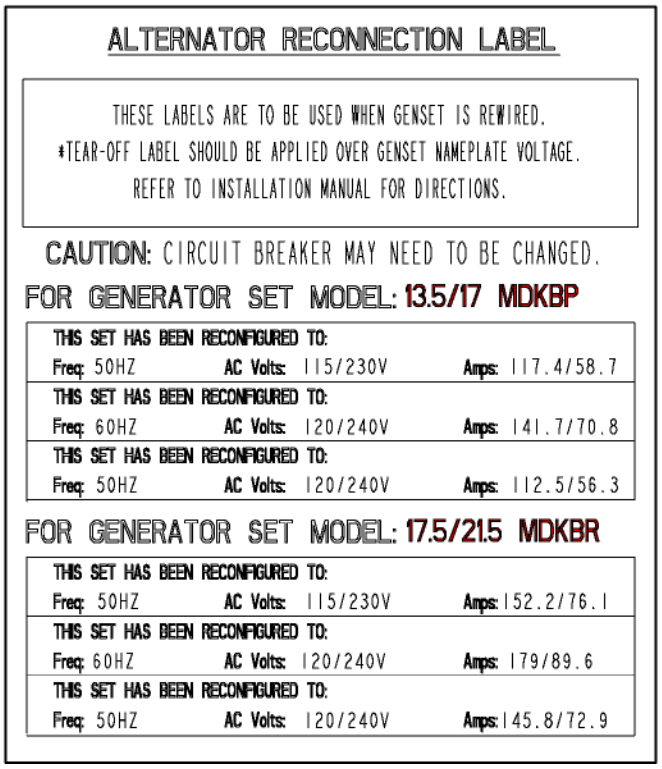
ALTERNATOR RECONNECTION LABEL

THESE LABELS ARE TO BE USED WHEN GENSET IS REWIRED.
*TEAR-OFF LABEL SHOULD BE APPLIED OVER GENSET NAMEPLATE VOLTAGE.
REFER TO INSTALLATION MANUAL FOR DIRECTIONS.

CAUTION: CIRCUIT BREAKER MAY NEED TO BE CHANGED.

FOR GENERATOR SET MODEL: 13.5/17 MDKBP

THIS SET HAS BEEN RECONFIGURED TO:
Freq: 50HZ AC Volts: 115/230V Amps: 117.4/58.7
THIS SET HAS BEEN RECONFIGURED TO:
Freq: 60HZ AC Volts: 120/240V Amps: 141.7/70.8
THIS SET HAS BEEN RECONFIGURED TO:
Freq: 50HZ AC Volts: 120/240V Amps: 112.5/56.3

FOR GENERATOR SET MODEL: 17.5/21.5 MDKBR

THIS SET HAS BEEN RECONFIGURED TO:
Freq: 50HZ AC Volts: 115/230V Amps: 152.2/76.1
THIS SET HAS BEEN RECONFIGURED TO:
Freq: 60HZ AC Volts: 120/240V Amps: 179/89.6
THIS SET HAS BEEN RECONFIGURED TO:
Freq: 50HZ AC Volts: 120/240V Amps: 145.8/72.9

FIGURE 13. TYPICAL RECONNECTION LABELS

6.2 Adjusting Voltage

⚠ WARNING

Hazardous Voltage

Touching uninsulated live parts inside the generator set and connected equipment can result in severe personal injury or death.

For your protection, stand on a dry wooden platform or rubber insulating mat, make sure your clothing and shoes are dry, remove jewelry from your hands, and use tools with insulated handles. Secure protective covers when completing installation.

1. Before adjusting voltage, make sure that proper fuel, exhaust, raw water, and battery connections have been made and that the engine has the proper levels of oil and coolant.
2. Disconnect all generator set loads.
3. Connect accurate meters and measure AC voltage and frequency.
4. When reconnecting the alternator for a different output voltage, make sure the line circuit breakers are suitable for the new output. Replace them if necessary with ones of appropriate rating.

6.3 Adjusting Voltage Using Digital Display

1. Start the generator set and let voltage and frequency stabilize for 5 to 10 seconds. Make sure all loads have been disconnected.
2. Rapidly press **START** 6 times during the first minute after startup to put the generator set control into voltage adjust mode. The green status lamp flashes rapidly and the display indicates a status change from **Running** to **Volt Adj** .
3. To adjust voltage up, press and quickly release **START**. Voltage increases approximately 0.6 volts with each press and release.
4. To adjust voltage down, press and hold **START** for about 1 second. Voltage decreases approximately 0.6 volts with each press and release.
5. When satisfied with the adjustment, wait about 20 seconds for the display to indicate a status change from **Volt Adj** to **Running** and then press **STOP** to stop the generator set and save the adjustment.
6. Restart the generator set and check voltage.
7. Recalibrate AC voltage on the digital display as instructed in the Operator Manual.

FIGURE 14. VOLTAGE ADJUSTMENT SCREEN

6.4 Adjusting Voltage Using Control Switch

1. Start the generator set and let voltage and frequency stabilize for 5 to 10 seconds. Make sure all loads have been disconnected.
2. Rapidly press **START** 6 times during the first minute after start up to put the generator set control into voltage adjust mode. The amber status lamp begins flashing about once every second to indicate the change to voltage adjust mode. The green status lamp stays on.
3. To adjust voltage up, press and quickly release **START**. Voltage increases approximately 0.6 volts with each press and release.

 Copyright © 2022 Cummins Inc.

4. To adjust voltage down, press and hold **START** for about 1 second. Voltage decreases approximately 0.6 volts with each press and release.
5. When satisfied with the adjustment, wait about 20 seconds for the amber lamp to stop flashing and then press **STOP** to stop the generator set and save the adjustment.
6. Restart the generator set and check voltage.

7 Installation Checklist

1. **Before starting the generator set,** review the installation checklist below for those items that do not require the generator set to be actually running.
2. Make necessary reconnections, modifications, and repairs.
3. Start and operate the generator set in accordance with the operator manual, observing all of its instructions and precautions.
4. Continue working through the installation checklist with the generator set running, making necessary reconnections, modifications, and repairs.
5. Check off each item that is verified to be true about the generator set. Do not place the generator set in service until each item has been checked off.

Check Box	Check List
	The generator set is protected from weather and splashing or dripping water.
	The Raw Water Pickup Test (see the Cooling section) was conducted during the sea trials to establish the water line and a siphon break was installed, if found to be necessary.
	The sea trials established that at all boat speeds, enough raw water is picked up for generator set engine and exhaust cooling.
	The Exhaust Water Separator Backflow Test (see the Exhaust System section) was conducted during the sea trials to establish that there is no backflow through the through-hull fitting or water separator under any operating conditions.
	All electrical devices used in spaces where gasoline vapors can accumulate are ignition protected.
	Generator set compartment ventilation meets regulations and the sea trials established that ventilation is sufficient to maintain acceptable generator set compartment temperatures, even during heat soaking after returning and docking.
	The living quarters are sealed against leaks from spaces where exhaust and fuel vapors can accumulate.
	The generator set is securely mounted.
	There is adequate clearance for conducting all maintenance specified in the Operator Manual.
	The coolant recovery tank is mounted properly and is accessible for inspection and filling.
	The entire exhaust system is accessible for inspection and replacement.
	Fuel tanks, piping, hoses, and filters comply with regulations and are accessible for inspection and replacement.
	The generator set is bonded to the boat grounding system in accordance with regulations.
	All grounded cranking motor circuits are connected by properly-sized common bonding conductors.
	If required, the kit for isolated DC ground was installed.
	An approved transfer switch prevents interconnections between shore power and generator set.
	AC wiring methods, materials, and bonding for grounding meet regulations.
	A properly sized battery has been installed, serviced, and charged. The battery is securely mounted in an adequately ventilated space and the positive (+) terminal is shielded from accidental contact.
	The remote control panel functions as intended and is not mounted where fuel vapors can accumulate.

 Copyright © 2022 Cummins Inc.

Check Box	Check List
	Emergency and (or) CO detection and shut-down devices have been connected and have been tested to determine that the generator set shuts down as intended.
	The generator set is properly sized for the application, the voltage and frequency are correct, and the loads across a multi-phase alternator are balanced.
	Exhaust back pressure is acceptable.
	The exhaust system is leak-free and conveys all engine exhaust outside, away from windows, doors, and vents.
	The fuel supply system is leak-free.
	The engine coolant and raw water systems are leak-free.
	The engine has the proper levels of oil and coolant.
	The raw water pump has been primed and the sea cock is open.
	All operators have been thoroughly briefed on the operator manual and its safety precautions, especially concerning the dangers of carbon monoxide and gasoline fuel vapors, and can demonstrate how to operate, maintain, and troubleshoot the generator set as explained in the manual.

Copyright © 2022 Cummins Inc.

8 Specifications

8.1 13.5 MDKDP, 17.5 MDKDR, 19 MDKDV

TABLE 3. GENERATOR SET SPECIFICATIONS

DESCRIPTION	13.5 MDKDP	17.5 MDKDR	19 MDKDV
Alternator	Single-Bearing, 4-Pole Rotating Field, Brushless	Single-Bearing, 4-Pole Rotating Field, Brushless	Single-Bearing, 4-Pole Rotating Field, Brushless
Installation Drawing	A047E164	A047E164	A047E164
Engine	Kubota 4-Stroke Cycle, Indirect Injection, Water Cooled Diesel with Digital Electronic Governing	Kubota 4-Stroke Cycle, Indirect Injection, Water Cooled Diesel with Digital Electronic Governing	Kubota 4-Stroke Cycle, Indirect Injection, Water Cooled Diesel with Digital Electronic Governing
Model	V2003	V2403	V2403
Rated RPM			
60 Hz	N/A	N/A	N/A
50 Hz	1500	1500	1500
Number of Cylinders	4	4	4
Bore	83 mm (3.27 in)	87 mm (3.43 in)	87 mm (3.43 in)
Stroke	92.4 mm (3.64 in)	102.4 mm (4.03 in)	102.4 mm (4.03 in)
Displacement	1.999 L (121.99 in^3)	2.434 L (148.53 in^3)	2.434 L (148.53 in^3)
FUEL:			
BioDiesel Compatibility	N/A	N/A	N/A
Consumption - 60 Hz			
No Load	N/A	N/A	N/A
Half Load	N/A	N/A	N/A
Full Load	N/A	N/A	N/A
Consumption - 50 Hz			
No Load	1.1 L/hr (0.3 gal/hr)	1.1 L/hr (0.3 gal/hr)	1.1 L/hr (0.3 gal/hr)
Half Load	2.6 L/hr (0.7 gal/hr)	3.8 L/hr (1 gal/hr)	3.8 L/hr (1 gal/hr)
Full Load	4.9 L/hr (1.3 gal/hr)	6.4 L/hr (1.7 gal/hr)	6.4 L/hr (1.7 gal/hr)
Minimum Fuel Inlet Pressure	- 1.7 psi	- 1.7 psi	- 1.7 psi
Minimum Fuel Inlet Pressure with Auxiliary Pump	N/A	N/A	N/A
LUBRICATION:			

 Copyright © 2022 Cummins Inc.

DESCRIPTION	13.5 MDKDP	17.5 MDKDR	19 MDKDV
Engine Oil Capacity	5.6 L (6.0 qt)	5.6 L (6.0 qt)	5.6 L (6.0 qt)
Maximum Angularity Any Direction			
Continuous	10°	10°	10°
Intermittent	22.5°	22.5°	22.5°
COOLING:			
Coolant Capacity	7.6 L (8.0 qt)	7.6 L (8.0 qt)	7.6 L (8.0 qt)
Coolant Flow Rate			
60 Hz	N/A	N/A	N/A
50 Hz	37.9 L/min (10 gal/min)	37.9 L/min (10 gal/min)	37.9 L/min (10 gal/min)
Raw Water Flow Rate			
60 Hz	N/A	N/A	N/A
50 Hz	26.5 L/min (7 gal/min)	26.5 L/min (7 gal/min)	26.5 L/min (7 gal/min)
Minimum Raw Water Inlet Pressure	- 1.7 psi	- 1.7 psi	- 1.7 psi
Maximum Pressure Drop across Keel Cooler Outlet and Inlet Connection	1 psi	1 psi	1 psi
Heat Rejection to Coolant			
60 Hz	N/A	N/A	N/A
50 Hz	379 Kcal/min (1500 BTU/min)	422 Kcal/min (1670 BTU/min)	422 Kcal/min (1670 BTU/min)
Thermostat Opening Temperature	71 °C (159.8 °F)	71 °C (159.8 °F)	71 °C (159.8 °F)
Thermostat Fully Open Temperature	85 °C (185 °F)	85 °C (185 °F)	85 °C (185 °F)
Recommended Pressure Cap	48 kPA (7 psi)	48 kPA (7 psi)	48 kPA (7 psi)
GENERATOR SET AIR FLOW:			
Combustion Air Flow	1.45 m^3/min (52 ft^3/min)	1.72 m^3/min (60 ft^3/min)	1.72 m^3/min (60 ft^3/min)
Heat Rejection to Ambient			
60 Hz	N/A	N/A	N/A
50 Hz	72 Kcal/min (285 Btu/min)	88 Kcal/min (350 Btu/min)	88 Kcal/min (350 Btu/min)
EXHAUST:			
Maximum Exhaust Back Pressure	3 in Hg	3 in Hg	3 in Hg
Dry Exhaust Gas Flow	4.5 m^3/min (160 ft^3/min)	5.1 m^3/min (180 ft^3/min)	5.1 m^3/min (180 ft^3/min)

Copyright © 2022 Cummins Inc.

DESCRIPTION	13.5 MDKDP	17.5 MDKDR	19 MDKDV
Dry Exhaust Temperature	-	-	-
BATTERIES:			
Nominal Battery Voltage	12/24 VDC	12/24 VDC	12/24 VDC
Minimum CCA Rating - SAE @ 0 °C (32 °F) 12 VDC	500 Amps	625 Amps	625 Amps
12 Volt Net Battery Charging Output			
Negative Ground (60 Hz)	N/A	N/A	N/A
Isolated Ground (60 Hz)	N/A	N/A	N/A
Negative Ground (50 Hz)	25 Amps	25 Amps	25 Amps
Isolated Ground (50 Hz)	35 Amps	35 Amps	35 Amps
24 Volt Net Battery Charging Output	-	-	-
Negative Ground (60 Hz)	N/A	N/A	N/A
Isolated Ground (60 Hz)	N/A	N/A	N/A
Negative Ground (50 Hz)	13 Amps	13 Amps	13 Amps
Isolated Ground (50 Hz)	24 Amps	24 Amps	24 Amps
Starter Rolling Current			
12V	N/A	N/A	N/A
24V	N/A	N/A	N/A
Maximum Starting Current Resistance			
12V	N/A	N/A	N/A
24V	N/A	N/A	N/A
SIZE, WEIGHT, NOISE:			
Weight without Sound Shield:			
Dry Weight	377 kg (830 lb)	375 kg (870 lb)	375 kg (870 lb)
Weight with Sound Shield:			
Dry Weight	404 kg (890 lb)	422 kg (930 lb)	422 kg (930 lb)
Sound Level with Sound Shield @ 1 meter	64 dB(A)	64 dB(A)	64 dB(A)
Sound Pressure Level with Sound Shield @ 1 meter per ISO-3744	N/A	N/A	N/A

 Copyright © 2022 Cummins Inc.

8.2 17 MDKDP, 21.5 MDKDR

TABLE 4. GENERATOR SET SPECIFICATIONS

DESCRIPTION	17 MDKDP	21.5 MDKDR
Alternator	Single-Bearing, 4-Pole Rotating Field, Brushless	Single-Bearing, 4-Pole Rotating Field, Brushless
Installation Drawing	A047E164	A047E164
Engine	Kubota 4-Stroke Cycle, Indirect Injection, Water Cooled Diesel with Digital Electronic Governing	Kubota 4-Stroke Cycle, Indirect Injection, Water Cooled Diesel with Digital Electronic Governing
Model	V2403	V2403
Rated RPM		
60 Hz	1800	1800
50 Hz	N/A	N/A
Number of Cylinders	4	4
Bore	87 mm (3.43 in)	87 mm (3.43 in)
Stroke	102.4 mm (4.03 in)	102.4 mm (4.03 in)
Displacement	2.434 L (148.53 in^3)	2.434 cm^3 (148.53 in^3)
FUEL:		
BioDiesel Compatibility	N/A	N/A
Consumption - 60 Hz		
No Load	1.8 L/hr (0.5 gal/hr)	1.9 L/hr (0.5 gal/hr)
Half Load	3.6 L/hr (1.0 gal/hr)	4.1 L/hr (1.1 gal/hr)
Full Load	6.1 L/hr (1.6 gal/hr)	8.2 L/hr (2.2 gal/hr)
Consumption - 50 Hz		
No Load	N/A	N/A
Half Load	N/A	N/A
Full Load	N/A	N/A
Minimum Fuel Inlet Pressure	- 1.7 psi	- 1.7 psi
Minimum Fuel Inlet Pressure with Auxiliary Pump	N/A	N/A
LUBRICATION:		
Engine Oil Capacity	5.6 L (6.0 qt)	5.6 L (6.0 qt)
Maximum Angularity Any Direction		
Continuous	10°	10°
Intermittent	22.5°	22.5°

Copyright © 2022 Cummins Inc.

DESCRIPTION	17 MDKDP	21.5 MDKDR
COOLING:		
Coolant Capacity	7.6 L (8.0 qt)	7.6 L (8.0 qt)
Coolant Flow Rate		
60 Hz	53 L/min (14 gal/min)	53 L/min (14 gal/min)
50 Hz	N/A	N/A
Raw Water Flow Rate		
60 Hz	59.1 L/min (15.6 gal/min)	34.1 L/min (9 gal/min)
50 Hz	N/A	N/A
Minimum Raw Water Inlet Pressure	- 1.7 psi	- 1.7 psi
Maximum Pressure Drop across Keel Cooler Outlet and Inlet Connection	1 psi	1 psi
Heat Rejection to Coolant		
60 Hz	402 Kcal/min (1590 BTU/min)	570 Kcal/min (2260 BTU/min)
50 Hz	N/A	N/A
Thermostat Opening Temperature	71 °C (159.8 °F)	71 °C (159.8 °F)
Thermostat Fully Open Temperature	85 °C (185 °F)	85 °C (185 °F)
Recommended Pressure Cap	48 kPA (7 psi)	48 kPA (7 psi)
GENERATOR SET AIR FLOW:		
Combustion Air Flow	1.72 m^3/min (60 ft^3/min)	1.72 m^3/min (60 ft^3/min)
Heat Rejection to Ambient		
60 Hz	88 Kcal/min (350 Btu/min)	120 Kcal/min (478 Btu/min)
50 Hz	N/A	N/A
EXHAUST:		
Maximum Exhaust Back Pressure	3 in Hg	3 in Hg
Dry Exhaust Gas Flow	5.1 m^3/min (180 ft^3/min)	5.1 m^3/min (180 ft^3/min)
Dry Exhaust Temperature	555 °C (1031 °F)	555 °C (1031 °F)
BATTERIES:		
Nominal Battery Voltage	12/24 VDC	12/24 VDC
Minimum CCA Rating - SAE @ 0 °C (32 °F) 12 VDC	625 Amps	625 Amps
12 Volt Net Battery Charging Output		
Negative Ground (60 Hz)	29 Amps	29 Amps
Isolated Ground (60 Hz)	38 Amps	38 Amps
Negative Ground (50 Hz)	N/A	N/A

 Copyright © 2022 Cummins Inc.

DESCRIPTION	17 MDKDP	21.5 MDKDR
Isolated Ground (50 Hz)	N/A	N/A
24 Volt Net Battery Charging Output		
Negative Ground (60 Hz)	14 Amps	14 Amps
Isolated Ground (60 Hz)	28 Amps	28 Amps
Negative Ground (50 Hz)	N/A	N/A
Isolated Ground (50 Hz)	N/A	N/A
Starter Rolling Current		
12V	N/A	N/A
24V	N/A	N/A
Maximum Starting Current Resistance		
12V	N/A	N/A
24V	N/A	N/A
SIZE, WEIGHT, NOISE:		
Weight without Sound Shield:		
Dry Weight	381 kg (840 lb)	395 kg (870 lb)
Weight with Sound Shield:		
Dry Weight	408 kg (899 lb)	422 kg (930 lb)
Sound Level with Sound Shield @ 1 meter	N/A	N/A
Sound Pressure Level @ meter per ISO 3744 with soundshield	70 dB(A)	70 dB(A)

8.3 22.5 MDKDT, 27 MDKDU, 29 MDKDS

TABLE 5. GENERATOR SET SPECIFICATIONS

DESCRIPTION	22.5 MDKDT	27 MDKDU	29 MDKDS
Alternator	Single-Bearing, 4-Pole Rotating Field, Brushless	Single-Bearing, 4-Pole Rotating Field, Brushless	Single-Bearing, 4-Pole Rotating Field, Brushless
Installation Drawing	A047E158	A047E158	A047E158
Engine	Kubota 4-Stroke Cycle, Indirect Injection, Water Cooled Diesel with Digital Electronic Governing	Kubota 4-Stroke Cycle, Indirect Injection, Water Cooled Diesel with Digital Electronic Governing	Kubota 4-Stroke Cycle, Indirect Injection, Water Cooled Diesel with Digital Electronic Governing
Model	V3300	V3300	V3300
Rated RPM			

DESCRIPTION	22.5 MDKDT	27 MDKDU	29 MDKDS
60 Hz	N/A	N/A	1800
50 Hz	1500	1500	N/A
Number of Cylinders	4	4	4
Bore	98 mm (3.86 in)	98 mm (3.86 in)	98 mm (3.86 in)
Stroke	110 mm (4.33 in)	110 mm (4.33 in)	110 mm (4.33 in)
Displacement	3.318 L (202.48 in^3)	3.318 cm^3 (202.48 in^3)	3.318 L (202.48 in^3)
FUEL:			
BioDiesel Compatibility	N/A	N/A	N/A
Consumption - 60 Hz			
No Load	N/A	N/A	2.4 L/hr (0.6 gal/hr)
Half Load	N/A	N/A	5.6 L/hr (1.5 gal/hr)
Full Load	N/A	N/A	10.7 L/hr (2.8 gal/hr)
Consumption - 50 Hz			
No Load	1.9 L/hr (0.5 gal/hr)	1.9 L/hr (0.5 gal/hr)	N/A
Half Load	4.5 L/hr (1.2 gal/hr)	4.5 L/hr (1.2 gal/hr)	N/A
Full Load	9.1 L/hr (2.4 gal/hr)	9.1 L/hr (2.4 gal/hr)	N/A
Minimum Fuel Inlet Pressure	- 1.7 psi	- 1.7 psi	- 1.7 psi
Minimum Fuel Inlet Pressure with Auxiliary Pump	N/A	N/A	N/A
LUBRICATION:			
Engine Oil Capacity	10.4 L (11 qt)	10.4 L (11 qt)	10.4 L (11 qt)
Maximum Angularity any Direction			
Continuous	10°	10°	10°
Intermittent	22.5°	22.5°	22.5°
COOLING:			
Coolant Capacity	14 L (14.5 qt)	14 L (14.5 qt)	14 L (14.5 qt)
Coolant Flow Rate			
60 Hz	N/A	N/A	53 L/min (14 gal/min)
50 Hz	43.5 L/min (11.5 gal/min)	43.5 L/min (11.5 gal/min)	N/A
Raw Water Flow Rate			
60 Hz	N/A	N/A	59.1 L/min (15.6 gal/min)
50 Hz	49.2 L/min (13 gal/min)	49.2 L/min (13 gal/min)	N/A

 Copyright © 2022 Cummins Inc.

DESCRIPTION	22.5 MDKDT	27 MDKDU	29 MDKDS
Minimum Raw Water Inlet Pressure	- 1.7 psi	- 1.7 psi	- 1.7 psi
Maximum Pressure Drop across Keel Cooler Outlet and Inlet Connection	1 psi	1 psi	1 psi
Heat Rejection to Coolant			
60 Hz	N/A	N/A	625 Kcal/min (2480 BTU/min)
50 Hz	470 Kcal/min (1870 BTU/min)	555 Kcal/min (2200 BTU/min)	N/A
Thermostat Opening Temperature	76.5 °C (170 °F)	76.5 °C (170 °F)	76.5 °C (170 °F)
Thermostat Fully Open Temperature	90 °C (194 °F)	90 °C (194 °F)	90 °C (194 °F)
Recommended Pressure Cap	48 kPA (7 psi)	48 kPA (7 psi)	48 kPA (7 psi)
GENERATOR SET AIR FLOW:			
Combustion Air Flow	2.6 m^3/min (91.7 ft^3/min)	2.6 m^3/min (91.7 ft^3/min)	2.6 m^3/min (91.7 ft^3/min)
Heat Rejection to Ambient			
60 Hz	N/A	N/A	149 Kcal/min (590 Btu/min)
50 Hz	111 Kcal/min (441 Btu/min)	130 Kcal/min (515 Btu/min)	N/A
EXHAUST:			
Maximum Exhaust Back Pressure	3 in Hg	3 in Hg	3 in Hg
Dry Exhaust Gas Flow	6.8 m^3/min (240 ft^3/min)	6.8 m^3/min (240 ft^3/min)	6.8 m^3/min (240 ft^3/min)
Dry Exhaust Temperature	475 °C (887 °F)	475 °C (887 °F)	526 °C (958 °F)
BATTERIES:			
Nominal Battery Voltage	12/24 VDC	12/24 VDC	12/24 VDC
Minimum CCA Rating - SAE @ 0 °C (32 °F) 12 VDC	1400 Amps	1400 Amps	1400 Amps
12 Volt Net Battery Charging Output			
Negative Ground (60 Hz)	N/A	N/A	28 Amps
Isolated Ground (60 Hz)	N/A	N/A	37 Amps
Negative Ground (50 Hz)	20 Amps	20 Amps	N/A
Isolated Ground (50 Hz)	33 Amps	33 Amps	N/A
24 Volt Net Battery Charging Output			

Copyright © 2022 Cummins Inc.

DESCRIPTION	22.5 MDKDT	27 MDKDU	29 MDKDS
Negative Ground (60 Hz)	N/A	N/A	21 Amps
Isolated Ground (60 Hz)	N/A	N/A	26 Amps
Negative Ground (50 Hz)	23 Amps	23 Amps	N/A
Isolated Ground (50 Hz)	23 Amps	23 Amps	N/A
Starter Rolling Current			
12V	N/A	N/A	N/A
24V	N/A	N/A	N/A
Maximum Starting Current Resistance			
12V	N/A	N/A	N/A
24V	N/A	N/A	N/A
SIZE, WEIGHT, NOISE:			
Weight without Sound Shield:			
Dry Weight	565 kg (1245 lb)	590 kg (1300 lb)	590 kg (1300 lb)
Weight with Sound Shield:			
Dry Weight	601 kg (1325 lb)	626 kg (1380 lb)	626 kg (1380 lb)
Sound Level with Sound Shield @ 1 meter	67 dB(A)	65 dB(A)	N/A
Sound Pressure Level at 1 meter with Sound Shield per ISO-3744	N/A	N/A	70 dB(A)

 Copyright © 2022 Cummins Inc.

This page is intentionally blank.

Appendix A. Wiring Diagrams

Table of Contents

Figure 15. A049H027 Sheet 1 ..... **63**
Figure 16. A049H027 Sheet 2 ..... **64**
Figure 17. A049H027 Sheet 3 ..... **65**

 Copyright © 2022 Cummins Inc.

The drawings included in this section are representative. For current complete information, refer to the drawing package that was shipped with the unit.

A.1 Wiring Drawing

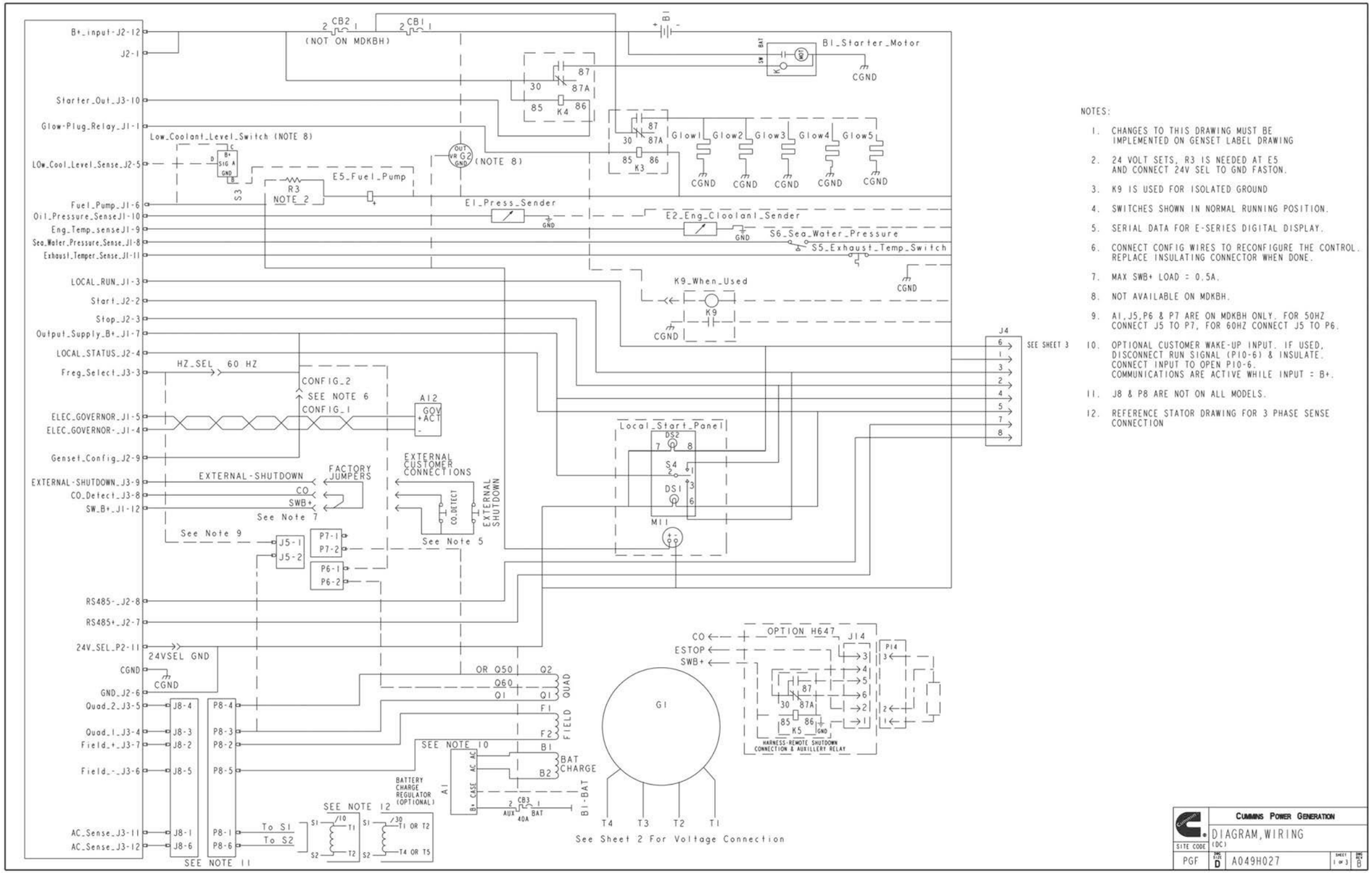

FIGURE 15. A049H027 SHEET 1

 Copyright © 2022 Cummins Inc.

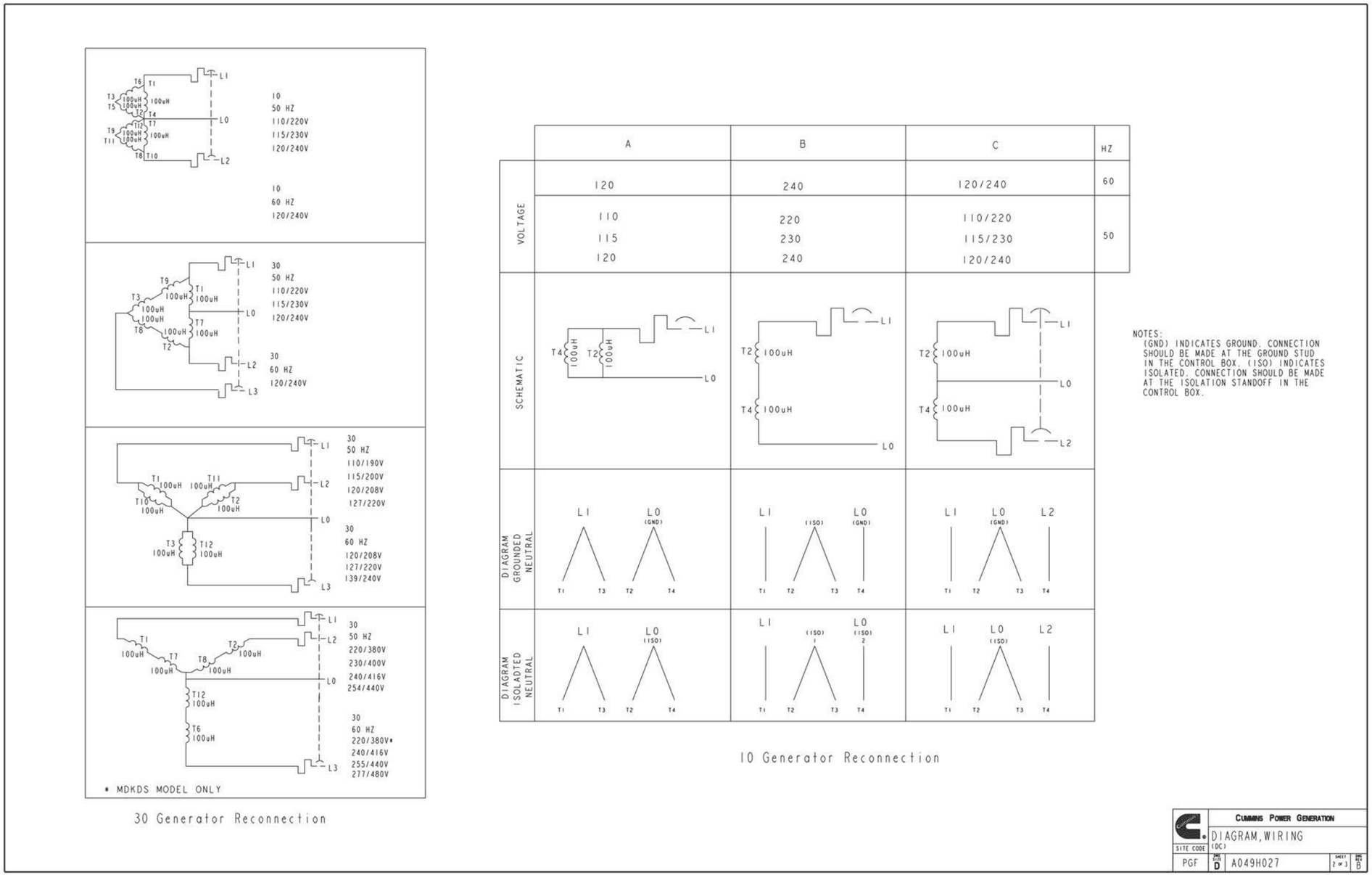

FIGURE 16. A049H027 SHEET 2

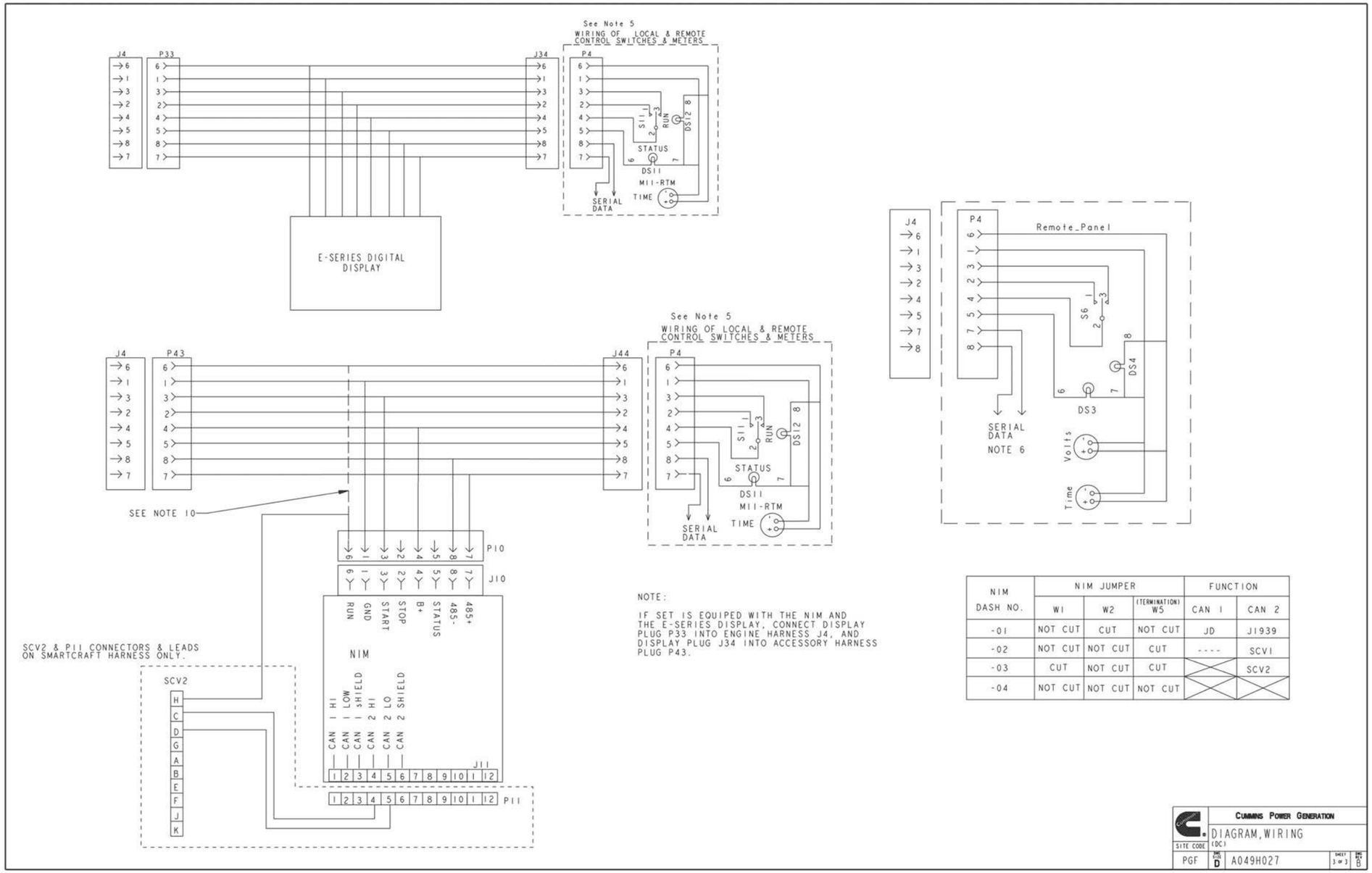

NIM DASH NO.	NIM JUMPER			FUNCTION	
	W1	W2	(TERMINATION) W5	CAN 1	CAN 2
-01	NOT CUT	CUT	NOT CUT	JD	J1939
-02	NOT CUT	NOT CUT	CUT	----	SCV1
-03	CUT	NOT CUT	CUT		SCV2
-04	NOT CUT	NOT CUT	NOT CUT		

FIGURE 17. A049H027 SHEET 3

Copyright © 2022 Cummins Inc.

This page is intentionally blank.

Copyright © 2022 Cummins Inc.

Appendix B. Outline Drawings

Table of Contents

Figure 18. MDKDP, MDKDR, MDKDV Outline Drawing (Sheet 1) 69
Figure 19. MDKDP, MDKDR, MDKDV Outline Drawing (Sheet 2) 70
Figure 20. MDKDP, MDKDR, MDKDV Outline Drawing (Sheet 3) 71
Figure 21. MDKDS, MDKDT, MDKDU Outline Drawing (Sheet 1) 72
Figure 22. MDKDS, MDKDT, MDKDU Outline Drawing (Sheet 2) 73
Figure 23. MDKDS, MDKDT, MDKDU Outline Drawing (sheet 3) 74

Copyright © 2022 Cummins Inc.

The drawings included in this section are representative. For current complete information, refer to the drawing package that was shipped with the unit.

B.1 MDKDP, MDKDR, MDKDV Outline Drawing

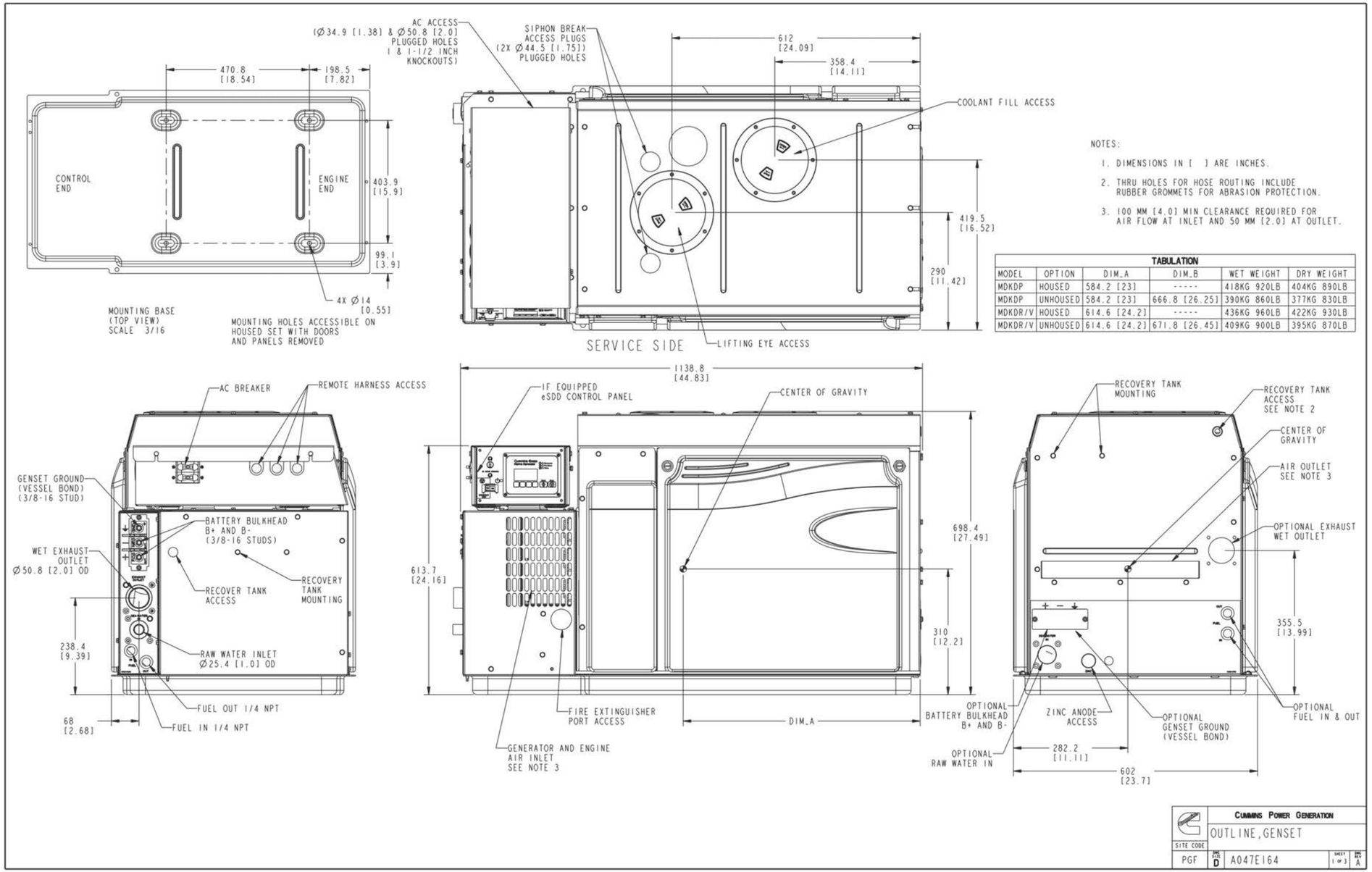

FIGURE 18. MDKDP, MDKDR, MDKDV OUTLINE DRAWING (SHEET 1)

 Copyright © 2022 Cummins Inc.

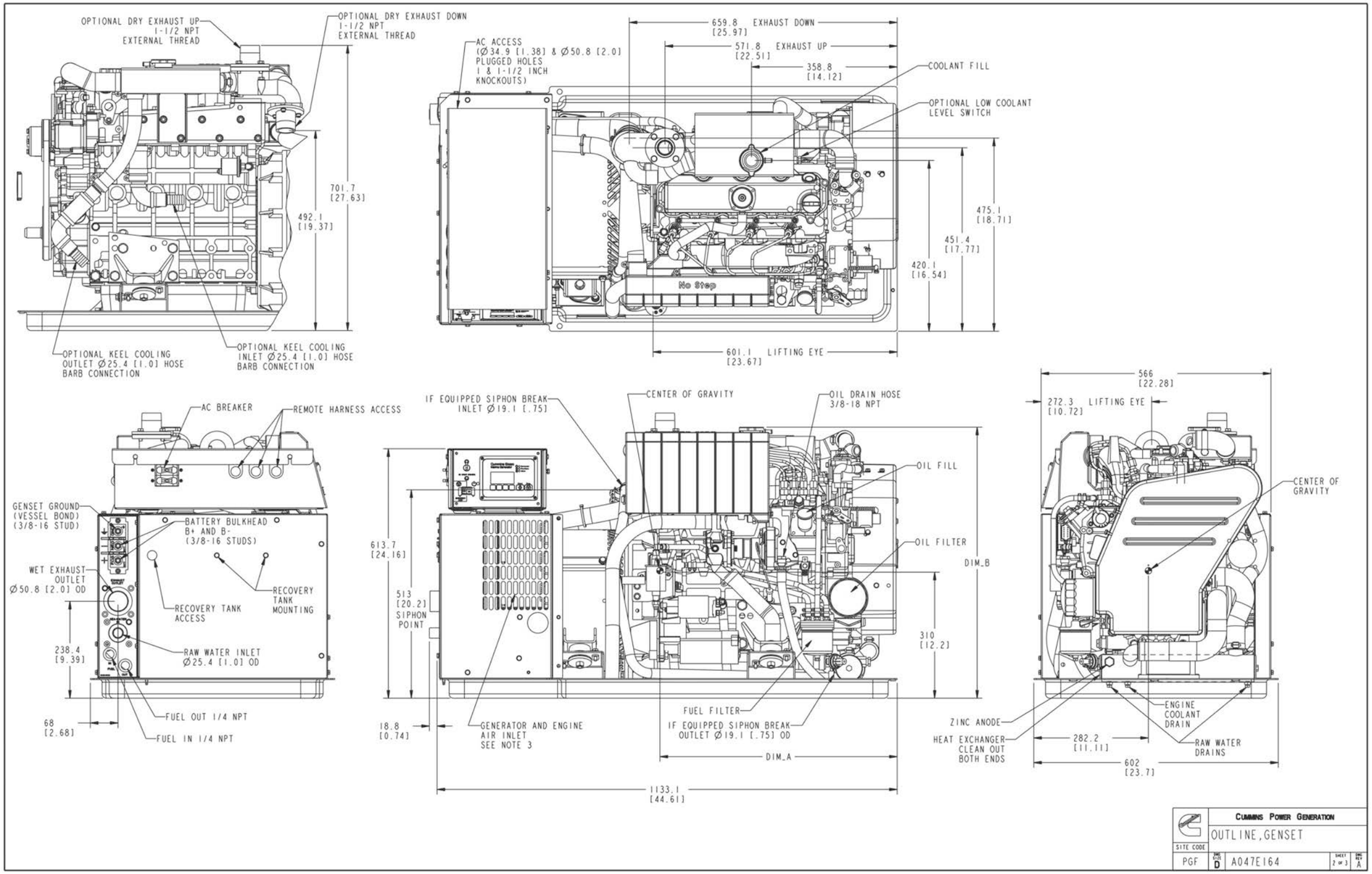

FIGURE 19. MDKDP, MDKDR, MDKDV OUTLINE DRAWING (SHEET 2)

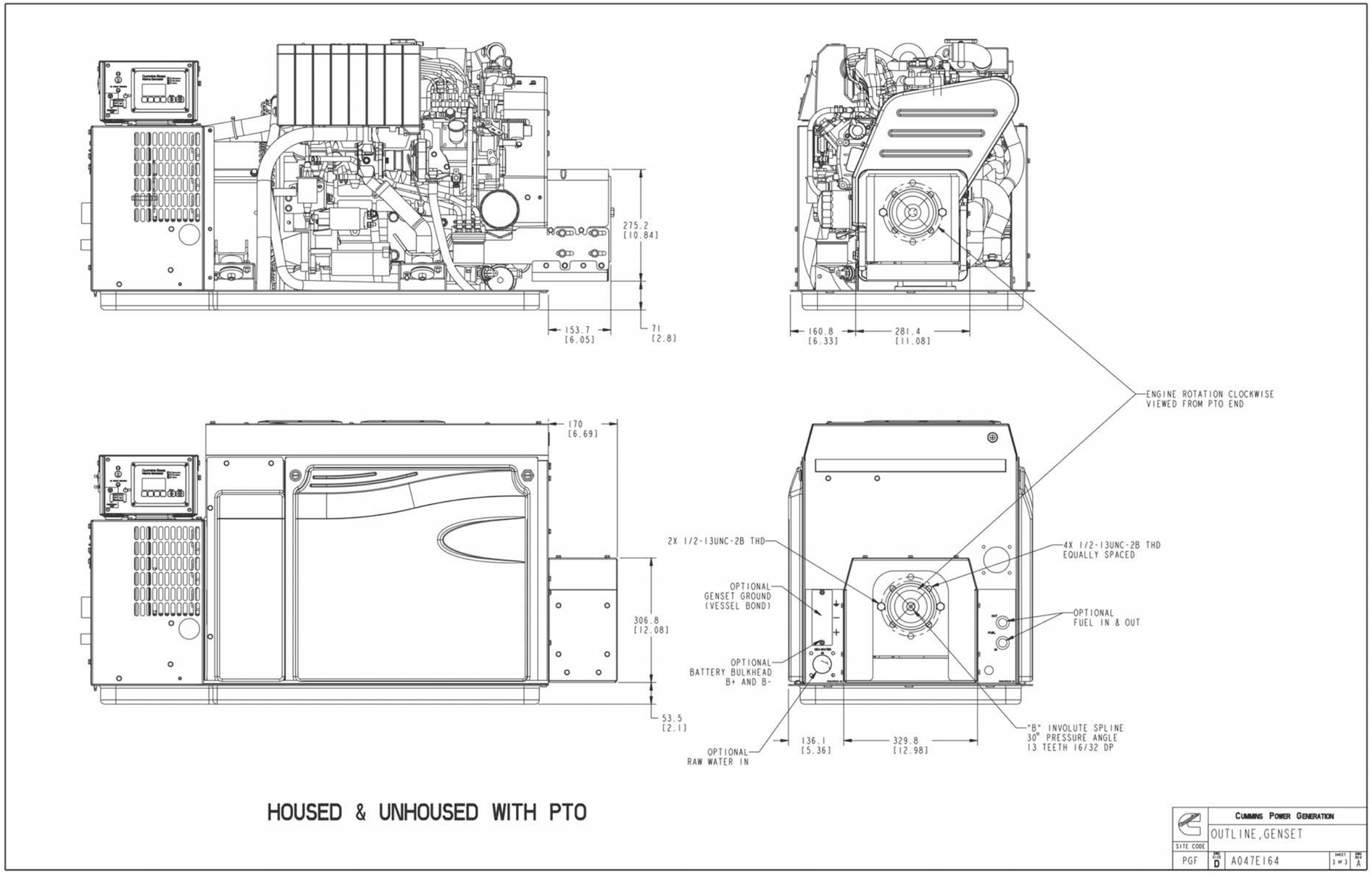

FIGURE 20. MDKDP, MDKDR, MDKDV OUTLINE DRAWING (SHEET 3)

 Copyright © 2022 Cummins Inc.

B.2 MDKDS, MDKDT, MDKDU Outline Drawing

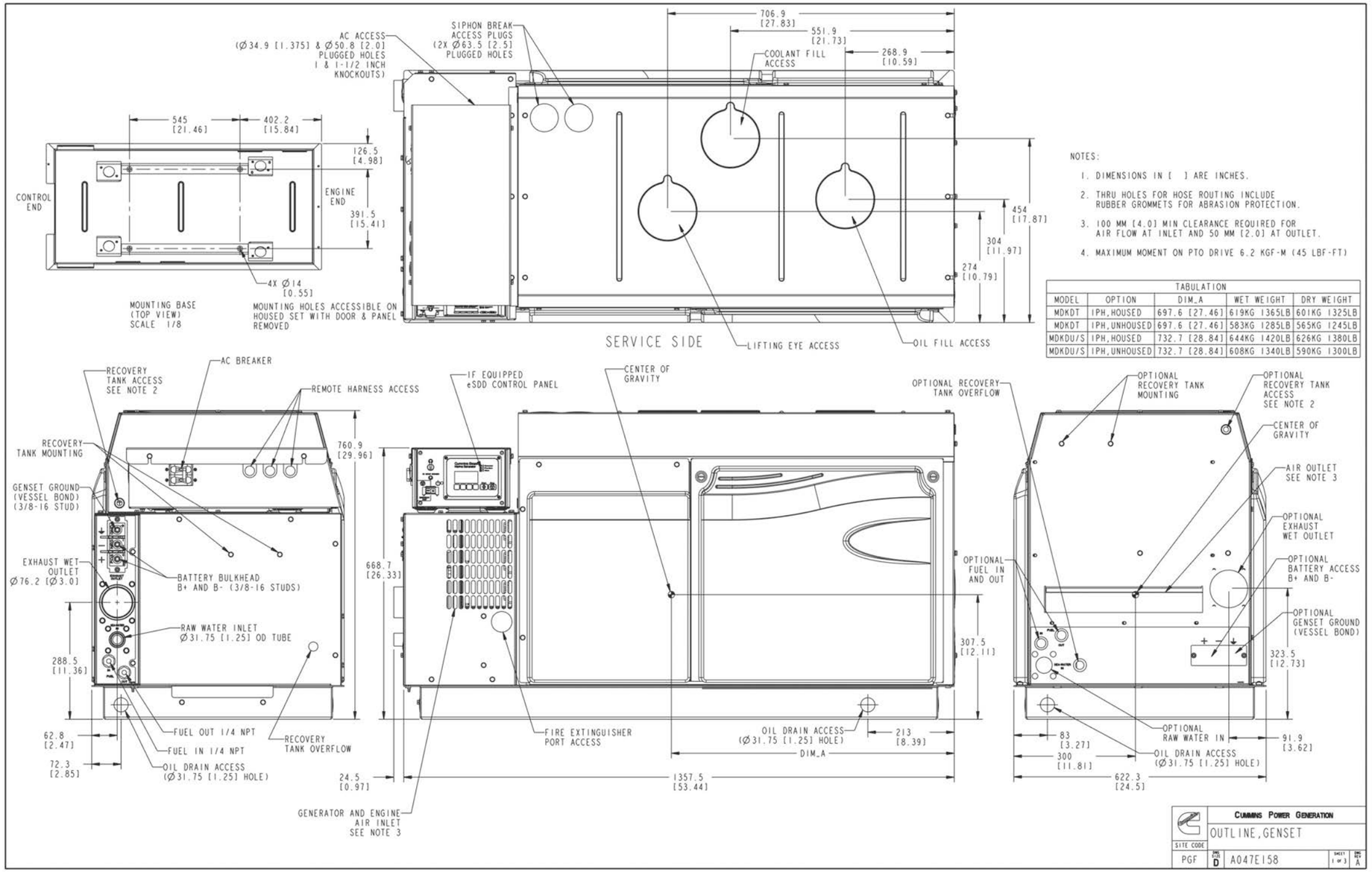

TABULATION				
MODEL	OPTION	DIM_A	WET WEIGHT	DRY WEIGHT
MDKDT	1PH,HOUSED	697.6 [27.46]	619KG 1365LB	601KG 1325LB
MDKDT	1PH,UNHOUSED	697.6 [27.46]	583KG 1285LB	565KG 1245LB
MDKDU/S	1PH,HOUSED	732.7 [28.84]	644KG 1420LB	626KG 1380LB
MDKDU/S	1PH,UNHOUSED	732.7 [28.84]	608KG 1340LB	590KG 1300LB

FIGURE 21. MDKDS, MDKDT, MDKDU OUTLINE DRAWING (SHEET 1)

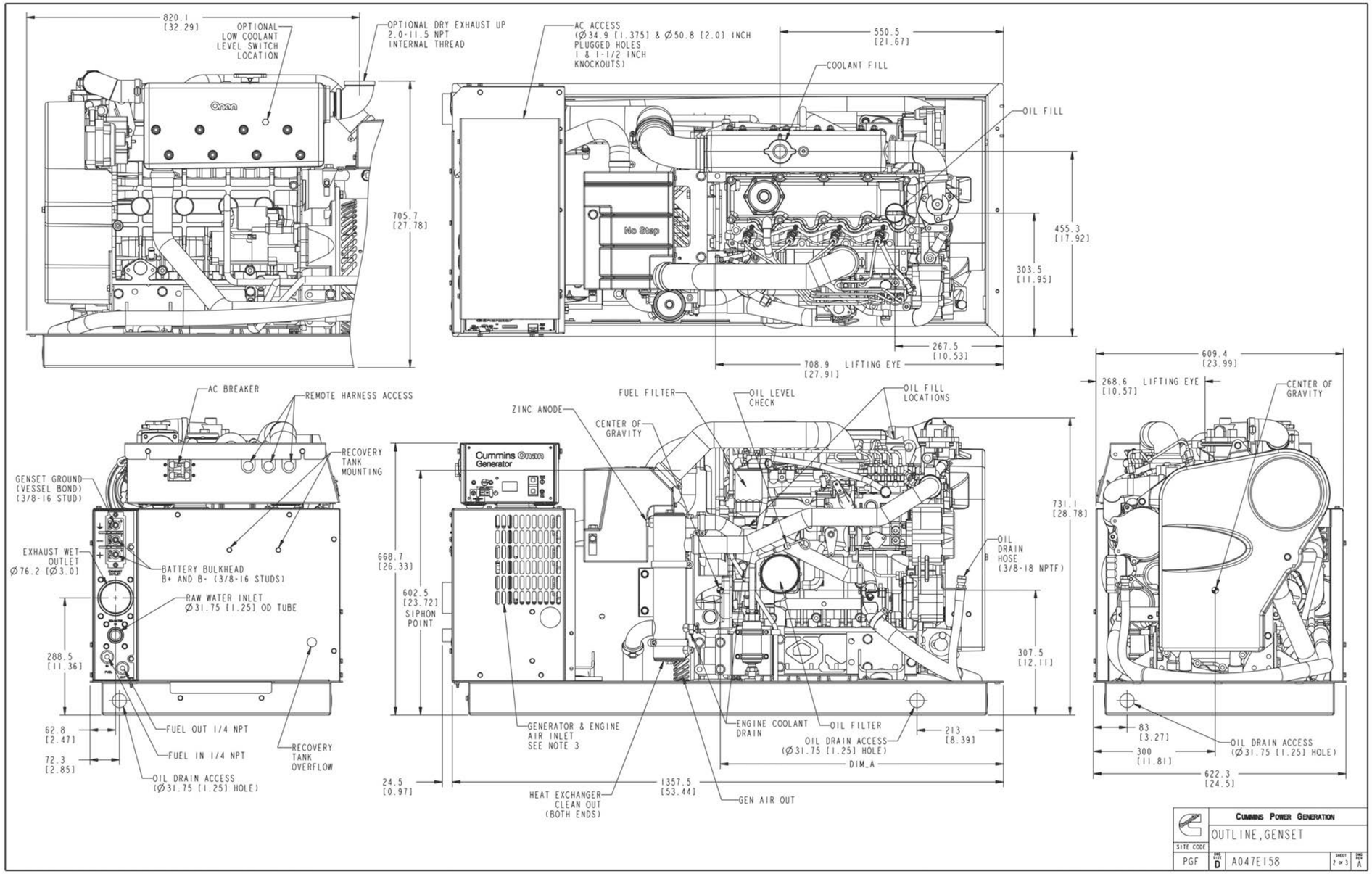

FIGURE 22. MDKDS, MDKDT, MDKDU OUTLINE DRAWING (SHEET 2)

 Copyright © 2022 Cummins Inc.

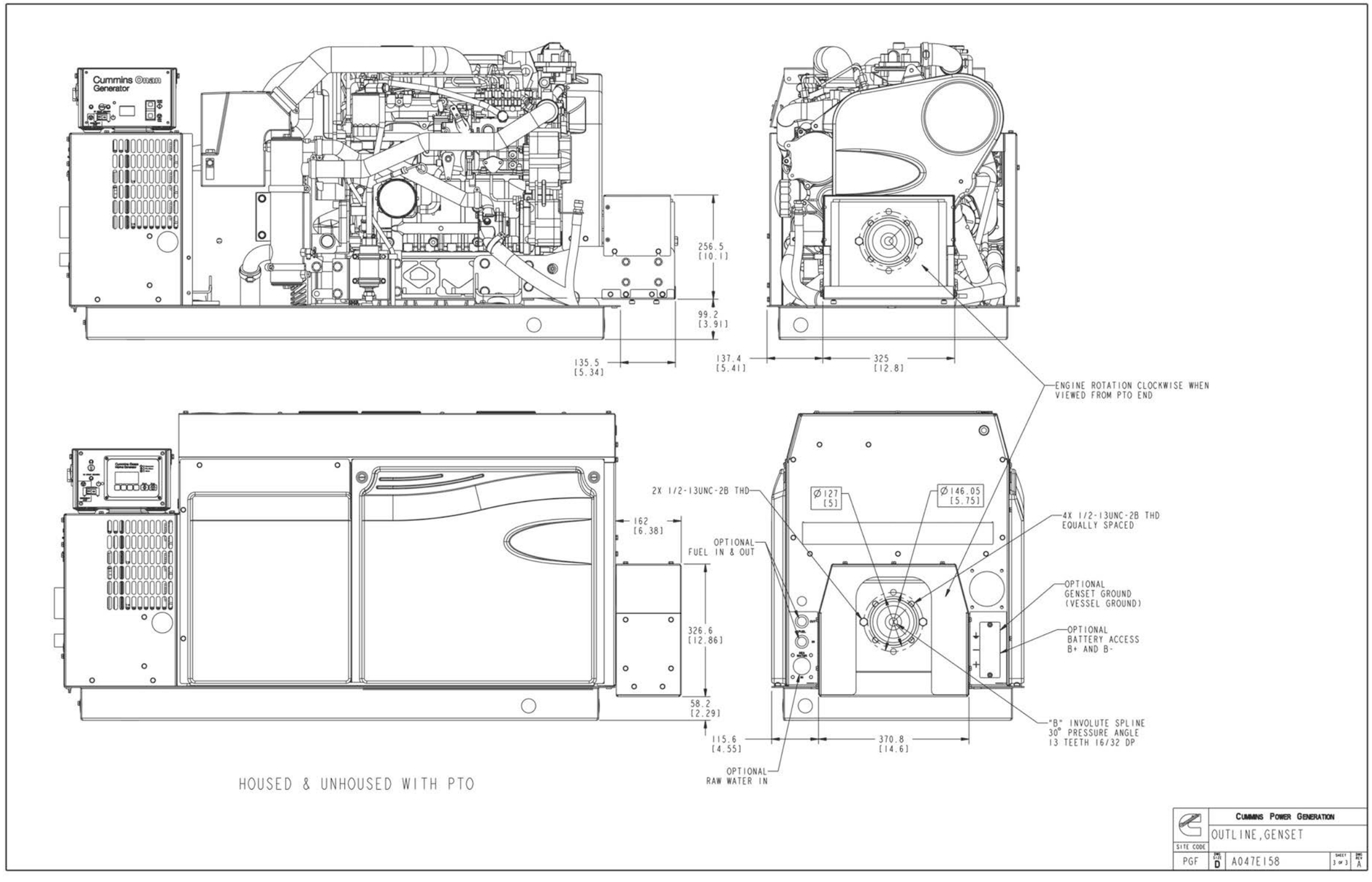

FIGURE 23. MDKDS, MDKDT, MDKDU OUTLINE DRAWING (SHEET 3)

power.cummins.com

Copyright © 2022 Cummins Inc. All rights reserved.
Cummins, Onan, and the "C" logo are registered trademarks of Cummins Inc. and its subsidiaries.
Other company, product, or service names may be trademarks or service marks of others.
Specifications are subject to change without notice.