Model: 9EOZD 60 Hz
7EFOZD 50 Hz

KOHLER POWER SYSTEMS

1-Phase Diesel

ISO 9001 KOHLER POWER SYSTEMS NATIONALLY REGISTERED

CE

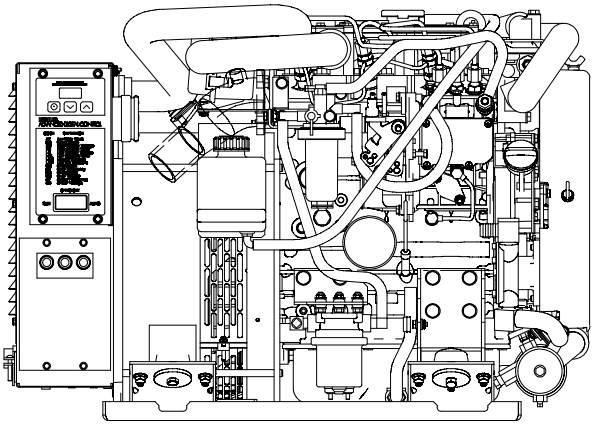

Marine Generator Set

Engine Features
- Diesel fueled
- Three cylinder
- Four cycle
- Closed cooling system
- Heat exchanger
- Frequency regulation of ±5%
- Electric fuel lift pump
- Lifting eyes

Generator Features
- Remote start 12-pin connector
- Class H insulation
- Multivoltage adjustability
- 60/50 Hz capability
- Voltage regulation of ±1.5%
- Radio suppression

ADC 2100 Advanced Digital Control Features
- Designed for today's most sophisticated electronics
- Easy to read alpha-numeric display
- Compact, integrally mounted control
- Potted boards/sealed connectors for maximum corrosion protection
- SAE J-1939 CANbus output
- Remote monitoring of up to 13 fault conditions
- Membrane keypad for configuration and adjustment
- Programmed crank cycle

Optional Accessories
- Sound shield
- Remote digital gauge
- Siphon break
- Circuit breakers

Generator Weights and Dimensions

	Without Sound Shield	With Sound Shield
Weight, kg (lb.)		
Wet	231 (508)	270 (593)
Dry	226 (498)	265 (583)
Length, mm (in.)	791 (31.14)	902 (35.50)
Width, mm (in.)	472 (18.59)	565 (22.25)
Height, mm (in.)	558 (21.98)	591 (23.28)

Generator Ratings

Model Series	Voltage	Hz	25°C (77°F) Amps	25°C (77°F) kW/kVA	Ph
9EOZD	120	60	70.8	8.5/8.5	1
	120/240	60	70.8/35.4	8.5/8.5	1
7EFOZD	115/230	50	56.5/28.3	6.5/6.5	1
	230	50	28.3	6.5/6.5	1
	240	50	25.0	6/6	1

RATINGS: Marine continuous ratings per ISO 3046, ISO 8528-1, and Kohler ISO rating guideline 2.14. Obtain technical information bulletin (TIB-101) on ratings guidelines for complete ratings definitions.

Availability is subject to change without notice. Kohler Co. reserves the right to change the design or specifications without notice and without any obligation or liability whatsoever. Contact your local Kohler generator distributor for availability.

Application Data

Engine

Engine Specifications	60 Hz	50 Hz
Type	4 cycle	
Cylinder, quantity	3	
Displacement, L (cu. in.)	1.115 (68)	
Bore and stroke, mm (in.)	76 x 82 (3.0 x 3.2)	
Compression ratio	23.5:1	
Combustion system	Indirect injection	
Rated rpm	1800	1500
Max. power at rated rpm, HP	14.74	12.43
Cylinder block material	Cast iron	
Cylinder head material	Cast iron	
Piston rings: quantity, type	2 compression/1 oil	
Crankshaft material	Forged steel	
Connecting rod material	Forged carbon steel	
Governor, type	Centrifugal, mechanical	

Engine Electrical

Engine Electrical System	60 Hz	50 Hz
Battery, voltage	12 volt	
Battery, charging	40-amp alternator	
Battery, minimum recommendation	500 CCA, 100 amp hr.	
Starter motor	0.8 kW Bendix-automotive type	

Cooling

Cooling System	60 Hz	50 Hz
Capacity, L (qt.), approx.	2.46 (2.6)	
Heat exchanger type	2.5 in. dia. x 3 pass cupronickel	
Seawater pump type	Belt-driven, 10-blade impeller	
Heat rejected to cooling water at rated kW, wet exhaust, kW (Btu/min.)	10.0 (574)	8.3 (472)
Engine water pump flow, Lpm (gpm)	32.4 (8.6)	27.0 (7.1)
Seawater pump flow, Lpm (gpm)	22.7 (6.0)	18.9 (5.0)

Fuel

Fuel shutoff solenoid	Electric
Fuel pump	Electric, rotary vane
Fuel pump priming	Electric
Maximum recommended fuel lift, m (ft.)	1.2 (4.0)

Lubrication

Lubricating System	60 Hz	50 Hz
Oil pan capacity with filter, L (qt.)	3.6 (3.8)	
Oil pump type	Pressure, trochoid pump	

Operation Requirements

Air Requirements	60 Hz	50 Hz
Engine combustion air requirements, L/min. (cfm)	1080 (38.1)	900 (31.8)
Engine/generator cooling requirements, L/min. (cfm)	4814 (170)	3964 (140)
Fuel Consumption	**60 Hz**	**50 Hz**
Diesel, Lph (gph) at % load		
100%	3.3 (0.86)	2.5 (0.67)
75%	2.5 (0.65)	1.9 (0.51)
50%	1.8 (0.47)	1.5 (0.39)
25%	1.3 (0.35)	1.1 (0.28)

Note: The fuel consumption of the 60 Hz model is based on 9EOZD and the fuel consumption of the 50 Hz model is based on 7EFOZD.

Sound Data

Sound Levels	60 Hz	50 Hz
Measured at 1 meter (3.28 ft.) with a housed generator set operating at full load, dBA	66	65

Engine Features

- One-side serviceability of fuel system, lubrication system, seawater pump, and air cleaner
- Low oil pressure shutdown
- High engine temperature shutdown
- Loss of coolant shutdown
- Seawater pump impeller failure shutdown
- Focused vibromounts
- Belt guard
- Disposable oil filter
- Oil drain valve and hose
- Full flow cooling system (thermostat bypass)
- Glow plug circuit for cold starting (optional)

Generator Features

- Brushless, rotating field design permits power to be obtained from stationary leads.
- Rotor and stator are vacuum impregnated and coated with high-bond epoxy varnish. Varnish helps prevent corrosion in high-humidity areas.
- Rotors are dynamically balanced to minimize vibration.
- Copper windings ensure minimal heat buildup. Insulation meets NEMA standards for class H insulation.
- Direct connected to the engine, the generator has sealed precision ball bearings with a precision-machined steel sleeve in the end bracket to prevent shaft misalignment and extend bearing life.
- Mounted on a drip-proof tray.
- Equipped with a four-lead reconnectable stator.

Application Data

ADC 2100 Control Features

- LED display:
  - Runtime hours
  - Crank cycle status
  - Diagnostics/fault codes/data
- Keypad
  - Secure access, password protected
  - Voltage, gain, and speed adjustment
  - Controller configuration (system voltage, phase, and frequency settings, battery voltage, and generator set model)
- Master control switch: run/off-reset/auto (engine start)
- Remote two-wire start/stop capability
- Potted electronics and sealed connections
- Voltage regulation ±1.5%
- Cyclic cranking: 15 seconds on, 15 seconds off (3 cycles)
- Faults with shutdown:
  - High engine temperature
  - Low oil pressure
  - Loss of coolant
  - Overcrank safety
  - Overspeed
  - Over/under voltage
  - Over/under frequency
  - Auxiliary fault
- Faults with warning:
  - Low battery voltage
  - High battery voltage
- Power requirements:
  - 12 VDC with fuse protection
  - 200 mA @ 12VDC/100 mA @ 24 VDC

Accessories

Sound Shield

Provides for highly effective silencing, ease of access for engine/generator servicing, low maintenance, excellent durability, and safety. The sound shield's customer connection panel includes connections for the following:

- Battery (positive and negative)
- Equipment ground
- Fuel inlet and return
- Seawater inlet
- Water-cooled exhaust outlet
- Oil drain
- Customer load lead access
- Customer interface

Siphon Break

Mandatory kit on generators installed below the waterline. Prevents the siphoning of flotation water into the engine.

Line Circuit Breakers

Protect the generator from extreme overload.

Preheat Kit

Provides improved starting in cold climates.

Ship-to-Shore Switch

Allows immediate switching to Kohler® generator set power or shore power protecting the electrical system from the possibility of simultaneous connection of both power sources.

Remote Digital Gauge

Allows starting/stopping from a location remote from the generator set. Standard 76.2 mm (3 in.) dia. hole required for mounting.

Oil Pressure Sender Kit

Provides sender necessary to make digital gauge functional.

Remote Connection/Extension Harness

Provides wiring between the remote digital gauge and the ADC connector. Extension limited to a total of four kits and 23 m (75 ft.). Available in 4.6 m (15 ft.) and 7.6 m (25 ft.) lengths.

12-Inch Remote Wiring Harness

Equipped with a 12-pin connector on one end that connects to the standard customer interface connector. Equipped on the other end with leads for connection to customer-supplied wiring.

KOHLER®
POWER SYSTEMS

KOHLER CO., Kohler, Wisconsin 53044 USA
Phone 920-565-3381, Fax 920-459-1646
For the nearest sales and service outlet in the US and Canada, phone 1-800-544-2444
KohlerPowerSystems.com

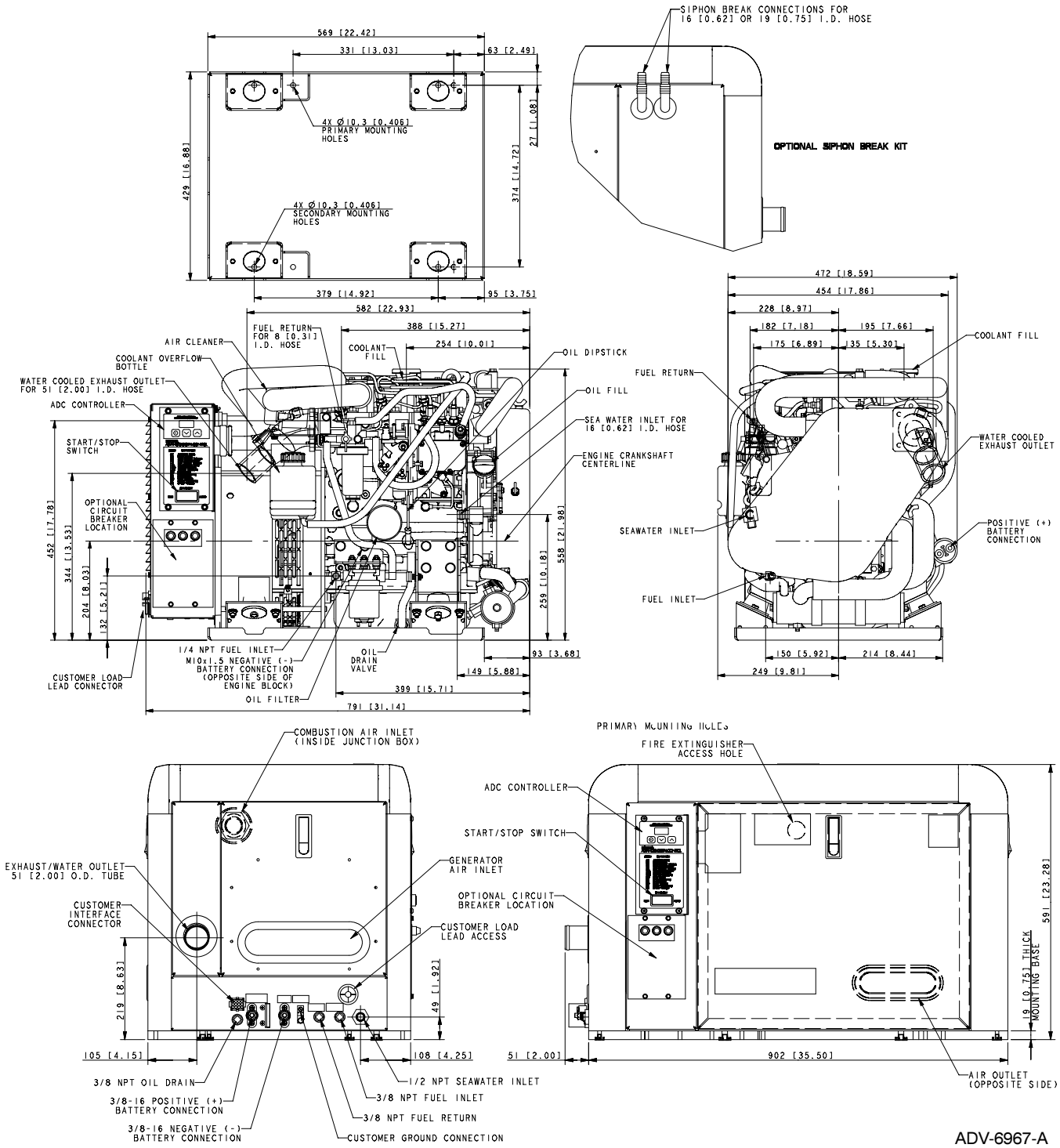

ADV-6967-A

DISTRIBUTED BY:

NOTE: Dimensions in [ ] are inch equivalents.

NOTE: This drawing is provided for reference only and is not intended for installation planning. Contact your local distributor for more detailed information.

© 2005 by Kohler Co. All rights reserved.