navico

Manual

Network Expansion Port 2
NEP-2

English

www.lowrance.com

www.simrad-yachting.com

Brands by Navico - Leader in Marine Electronics

Disclaimer

As Navico is continuously improving this product, we retain the right to make changes to the product at any time which may not be reflected in this version of the manual. Please contact your nearest distributor if you require any further assistance.

It is the owner's sole responsibility to install and use the instrument and transducers in a manner that will not cause accidents, personal injury or property damage. The user of this product is solely responsible for observing safe boating practices.

NAVICO HOLDING AS AND ITS SUBSIDIARIES, BRANCHES AND AFFILIATES DISCLAIM ALL LIABILITY FOR ANY USE OF THIS PRODUCT IN A WAY THAT MAY CAUSE ACCIDENTS, DAMAGE OR THAT MAY VIOLATE THE LAW.

Governing Language: This statement, any instruction manuals, user guides and other information relating to the product (Documentation) may be translated to, or has been translated from, another language (Translation). In the event of any conflict between any Translation of the Documentation, the English language version of the Documentation will be the official version of the Documentation.

This manual represents the product as at the time of printing. Navico Holding AS and its subsidiaries, branches and affiliates reserve the right to make changes to specifications without notice.

Copyright

Copyright © 2010 Navico Holding AS.

Feedback from you

Your feedback is important and helps Navico ensure that this manual is a valuable resource for all marine technicians. E-mail your comments or suggestions about this manual to the following address:
tech.writing@navico.com

Compliance Statements

The NEP-2 complies with the following regulations:

• FCC Part 15

• CE compliant per EN60945

• C - Tick

For more information please refer to our websites: www.simrad-yachting.com and www.lowrance.com

☞ *The equipment named in this declaration, is intended for use in international waters as well as coastal sea areas administered by countries of the E.U. and E.E.A.*

Warning

The user is cautioned that any changes or modifications not expressly approved by the party responsible for compliance could void the user's authority to operate the equipment.

This equipment has been tested and found to comply with the limits for a Class B digital device, pursuant to Part 15 of the FCC rules. These limits are designed to provide reasonable protection against harmful interference in a residential installation. This equipment generates, uses and can radiate radio frequency energy and, if not installed and used in accordance with the instructions, may cause harmful interference to radio communications. However, there is no guarantee that the interference will not occur in a particular installation. If this equipment does cause harmful interference to radio or television reception, which can be determined by turning the equipment off and on, the user is encouraged to try to correct the interference by one or more of the following measures:

- Reorient or relocate the receiving antenna
- Increase the separation between the equipment and receiver
- Connect the equipment into an outlet on a circuit different from that of the receiver
- Consult the dealer or an experienced technician for help

Industry Canada

Operation is subject to the following two conditions:

(1) this device may not cause interference, and

(2) this device must accept any interference, including interference that may cause undesired operation of the device.

Warranty

The warranty card is supplied as a separate document.

In case of any queries, refer to our websites: www.simrad-yachting.com and www.lowrance.com

Contents

Introduction 5

Parts List 5

Required tools and supplies 5

Installation 6

Mounting location.....6

Mounting the NEP-2 module.....7

Wiring the NEP-2 8

Power 8

Ethernet 10

Cables 10

NEP-2 network connection example 11

Trouble shooting..... 12

Specifications 13

Dimension drawings 14

Introduction

The NEP-2 module is a five port marine Ethernet switch designed for use with compatible Simrad and Lowrance Ethernet devices. It can be used to share sonar, radar and weather information over the network.

Lowrance HDS and Simrad NSE multi-functional displays are not designed to inter-operate and exchange data over the same network —even though they inter-operate using many of the same components.

Parts List

Part Number		Description
000-10029-001	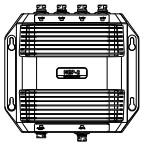	Network Expansion Port 2 (NEP-2)
032-0055-08		4-Pins Power cable, 2 m (6,56 ft)
083-0011-21		Mounting screws (4) for module
	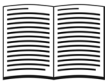	Documentation Installation manual, warranty card

Required tools and supplies

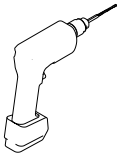 Drill	2 mm (5/64”) Drill Bit	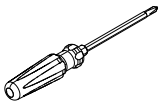 Phillips screw driver	Pencil
Silicone sealer when flush mounting			

Installation

Mounting location

When installing the expansion port you should consider the following:

- Ensure you have as much separation as possible between different electrical equipment (see following diagram for minimum distance recommendations).
- The NEP-2 conforms to the appropriate Electromagnetic Compatibility (EMC) standards but proper installation is required to get best use and performance from this product.

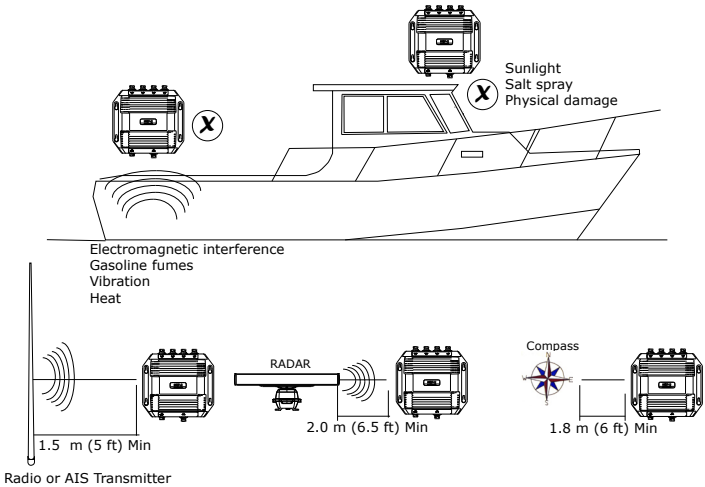

Mounting the NEP-2 module

Preferably mount the NEP-2 on a horizontal surface to avoid water following the cable and entering the connectors.

If mounted on a vertical surface, mount the unit so that cables exit sideways. If that is not feasable, create drip loops to prevent moisture entering the connectors.

Ensure correct rotation of the mounting holes when mounted vertically. See illustration below.

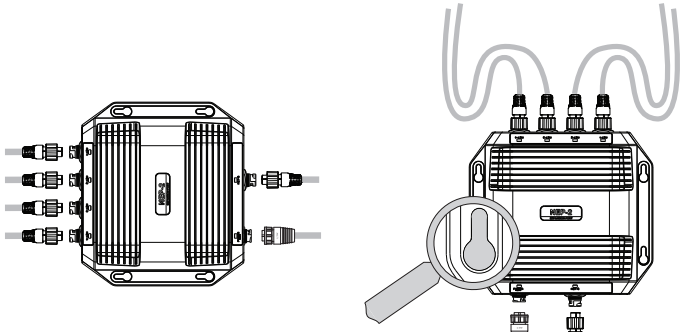

Fasten the NEP-2 by using the screws included with the unit.

Secure cables and ensure to not put strain in the connectors.

☞ *Install the NEP-2 module and power cable at least 1.5 metres (5 feet) away from your VHF radio antenna to prevent interference.*

Wiring the NEP-2

Don’t do this	Do this
Don’t make sharp bends in the cables.	Do make drip and service loops
Don’t run cables in a way that allows water to flow down into the connectors.	Do tie-wrap all cables to keep them secure
Don’t route the data cables in areas adjacent to radar, transmitter, or large current carrying cables.	
Don’t cut or modify the antenna cable	

Power

Before starting the installation, be sure to turn electrical power off. If power is left on or turned on during the installation, fire, electrical shock, or other serious injury may occur. Be sure that the voltage of the power supply is compatible with the NEP-2 module.

The NEP-2 has a voltage rating of 12 V DC or 24 V DC. (9 V DC - 32 V DC max range).

The red wire should always be connected to (+) using a fuse or thermal breaker (5 Amp) to protect the cable. The NEP-2 is protected by an internal auto resetting fuse.

The yellow power control wire has to be either:

- Common with the red wire (after fuse or breaker)
- Connected in common to the power control wire of a display or other device.

If yellow wire is not connected; NEP-2 will be off.

☞ *The device applying voltage to the yellow wire must share a common ground with NEP-2.*
The blue wire will not be used, so cap the end of the blue wire with a wire nut or electrical tape.

Power cable	Pin	Color	Function
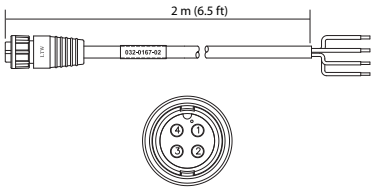	1	Black	Battery (-)
	2	Blue	N/C
	3	Yellow	Power Ctrl
	4	Red	Battery (+) 12-24 V DC

Suggested configurations for power wiring:

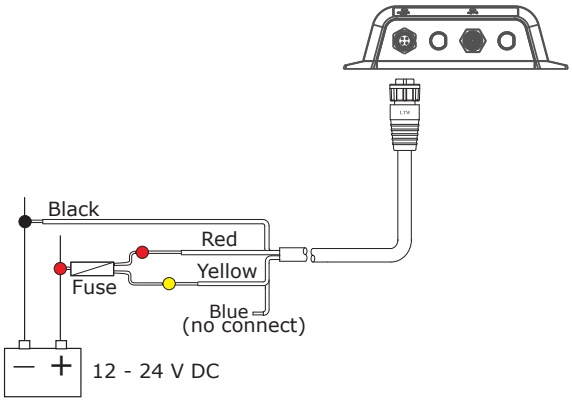

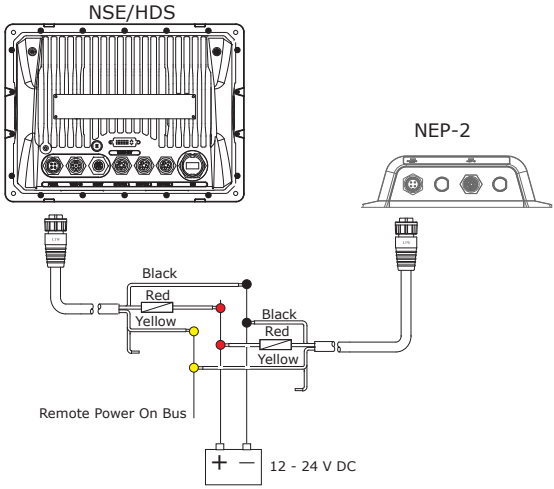

Ethernet

Ethernet connector		
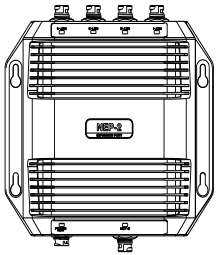		
	Pin	Function
	1	TX+
	2	TX-
	3	RX+
	4	RX-
	5	GND

☞ *When Ethernet ports are not in use, cover them with the supplied dust-caps to prevent corrosion.*

Cables

Part number	Description
000-0127-56	Adapter cable: Ethernet Yellow male to RJ45 female 2m (6.5 ft).
000-0127-51	Ethernet cable yellow 5 pin 2m (6.5 ft.).
000-0127-29	Ethernet cable yellow 5 pin 4.5m (15 ft.).
000-0127-30	Ethernet cable yellow 5 pin 7.7m (25 ft.).
000-0127-37	Ethernet cable yellow 5 pin 15.2m (50 ft.).

☞ *The adapter cable is only needed if you are using a HD radar.*

☞ *Ethernet cables not included.*

NEP-2 network connection example

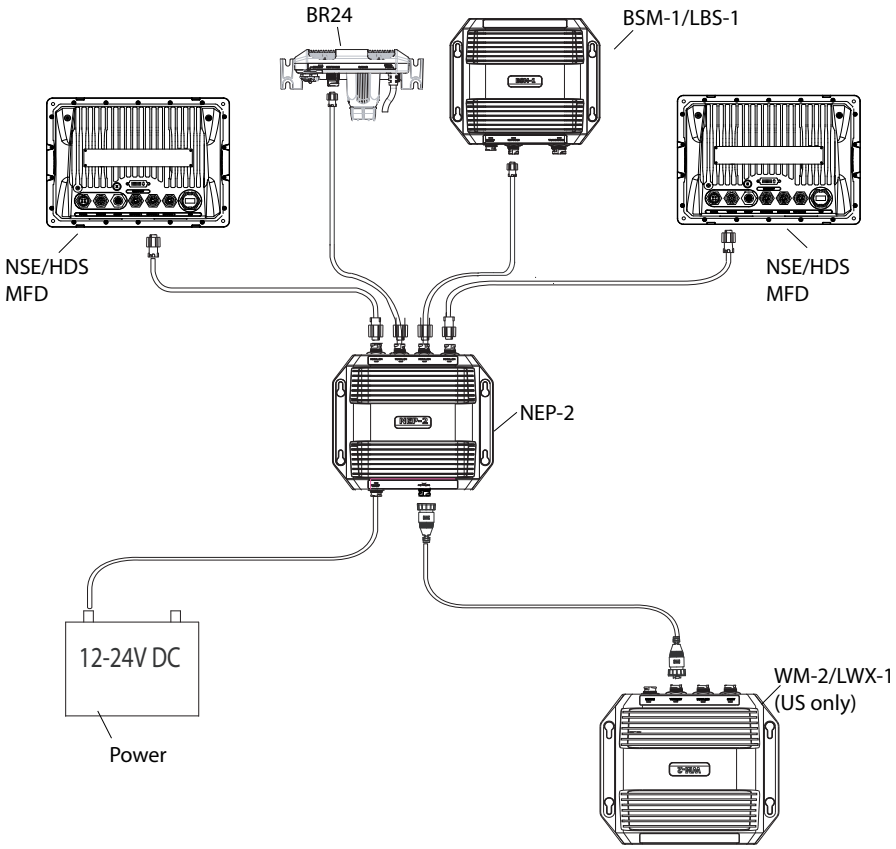

Trouble shooting

LED status	Probable fault	Recommended action
POWER LED		
Green —solid on.	No fault; normal power function.	Safe to use
Red —solid on	Possible internal fault has occurred.	See your dealer
Off — no light	No power	Check power control wire connections.
Ethernet LED		
Green — constant flashing	No fault; normal Ethernet communication.	Safe to use
Off —no light	No Ethernet connection	Check connection

Specifications

Electrical	
Voltage input	9-32 V DC
Power consumption	500mA max.
Power consumption when OFF:	<1mA
Communication	Ethernet 10/100 Base-TX
Module dimension	
Size:	Width: 203.8mm (8.0 inches) including base. Length: 194mm (7.6 inches) plus connectors. Height 57mm (2.2 inches).
Weight:	0.9kg (2lbs)
Environmental specifications	
Waterproof:	IPX5
Operating temperature:	-25 ~ 55C; -13 ~ 131F
Storage temperature:	-30 ~ 70C; -22 ~ 158F
Compliance	
FCC	Part 15
CE	EN 60945

Dimension drawings

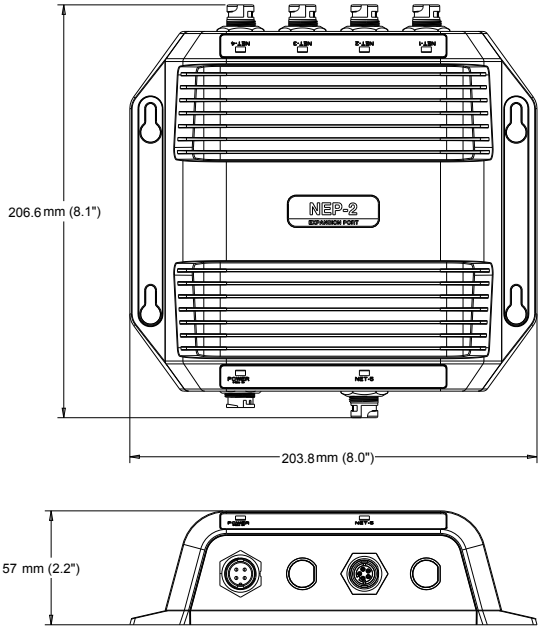

NEP-2, Installation manual, English, Doc.no.988-0181-00, Rev.B

navico