INSTALLATION AND WIRE CONNECTION MANUAL

1. SAFETY PRECAUTIONS

❑ Symbol Identification

This manual uses symbols and icons to indicate safety precautions and concerns during the installation procedure. Be sure to carefully read and understand each precaution prior to beginning the installation.

⚠ WARNING

- **This symbol is intended to alert the user to the presence of important operating instructions. Failure to heed the instructions may result in severe injury or death.**

⚠ CAUTION

- **This symbol is intended to alert the user to the presence of important operating instructions. Failure to heed the instructions can result in injury or material damage.**

❑ Before Use

⚠ WARNING

- **Confirm the battery voltage of the vehicle to be installed. This unit is designed only for vehicles with DC 12V power supply.**
- **Disconnect the negative terminal of the battery before connecting wires, otherwise an electric shock, injury by short circuit may occur.**

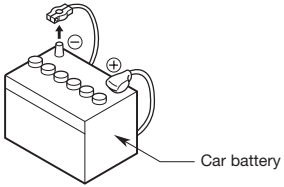

❑ Installation Precautions

⚠ WARNING

- **When installing the unit to a vehicle with an airbag system, never install it in a place where it may affect the operation of the airbag.**
- **Do not install this unit in the following locations:**
  A location interfering with the driver's visual range or operation.
  A location where the gear shift or brake pedal are hindered.
  A location where passengers are at risk.
  An unstable location, or where the system may fall.

⚠ CAUTION

- **Do not install the system in the locations described below. This may cause a fire, accident or electrical shock:**
  A location exposed to rain or dust.
  An unstable location, or where the system may fall.
- **Do not install this unit in a place exposed to direct sunlight, heat or a place where the vent holes or heat radiation holes are covered.**
- **When you install the antenna, mount it in a place where the elements of the antenna do not protrude beyond the edge of the front, back, left and right of the vehicle.**
  If it comes in contact with pedestrians, it may cause an accident.

❑ Installation Notes

⚠ WARNING

- **Please note the position of pipes, tanks and electrical wirings before installing the unit into the vehicle; failure in avoiding these may cause a fire or malfunction.**

⚠ CAUTION

- **Use only the supplied parts.**
  If unspecified parts are used, they may cause damage.
- **Any holes made in the body of the vehicle should be sealed with a silicon adhesive.**
  If exhaust fumes or water penetrates into the vehicle, this may cause an accident.
- **Fasten the bolts securely when installing the unit. If the bolts are loose an accident or malfunction could occur.**

❑ Connection Notes

⚠ WARNING

- **Loom all cables according to the instruction manual, so as not to hinder operation.**
- **Wire the connecting cords/cables away from high temperature areas.**
  If the coatings of the cables melt, it could cause an accident/fire by a short circuit.
  Take care when wiring in the engine compartment.
- **When wiring the connecting cables in a vehicle with an airbag system, never feed the cables through a place where it may affect the operation of the airbag.**
  An airbag not operating correctly in an emergency may cause increased injury.

⚠ CAUTION

- **Verify wires with a digital multi-meter prior to making any connections. Many new vehicles use multiplexed and/or low voltage circuits that can be damaged if a test light or logic probe is used.**
- **Connect cables appropriately. If a wrong connection is made, this may cause a fire or accident.**
- **When passing cables through the body of the vehicle, use non-conductive grommets.**
  If the coatings of the cables are worn out by rubbing, this may cause an accident, fire or a short circuit.
- **After wiring cables, fix them with insulation tape.**
- **Be sure to switch off the vehicle when connecting or disconnecting cables to/from the unit, otherwise an electric shock, injury or accident may occur.**

2. PACKAGE CONTENTS

① **Main unit**
② **Quick Start Guide & Installation Manual**
③ **CD-ROM**
- Owner's manual
- Owner's manual - Navigation (NX604 only)

④ **Power supply cable**
⑤ **RCA pin cable (6ch)**
⑥ **RCA pin cable (Rear AUX-IN/Rear Video Out)**
⑦ **Bag for accessories**
- Flat head screw (M5 × 8 mm) 8
- Hexagonal bolt (M5 × 8 mm) 8
- Rubber cap (for RCA pin cable) 10
- Cable holder (NX604 only) 3
- Double-sided tape for fastening GPS antenna (NX604 only) 1
- Cable tie 1

⑧ **Finisher**
⑨ **Warranty card**
⑩ **GPS antenna (NX604 only)**
⑪ **USB Cable**
⑫ **Microphone (NX604 only)**

Notice

- *The provided disc (CD-ROM manual) cannot be played back on this unit.*

3. GENERAL CAUTIONS

- Do not open the case. There are no user-serviceable parts inside. If you drop anything into the unit during installation, consult your dealer or an authorized Clarion service center.

4. CAUTIONS ON INSTALLATION

- Prepare all articles necessary for installing the main unit before starting.
- Install the unit within 35° of the horizontal plane. (Figure 1)

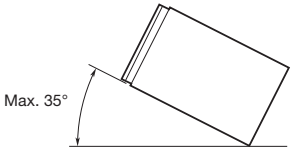

Figure 1

- If you have to do any modification on the car body, such as drilling holes, consult your car dealer beforehand.
- Use the included screws for installation. Using other screws can cause damage. (Figure 2)

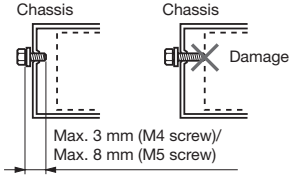

Figure 2

5. INSTALLING THE MAIN UNIT

This unit is designed for fixed installation in the dashboard.

- When installing the main unit in NISSAN vehicles, use the parts attached to the unit and follow the instructions in Figure 3.
  When installing the main unit in TOYOTA vehicles, use the parts attached to the vehicle and follow the instructions in Figure 4.
- Wire as shown in Section 9→ P.61.
- Reassemble and secure the unit in the dashboard and set the face panel and center panel.

Mounting Screw Holes (Side View of the Main Unit)

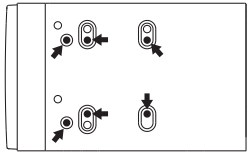

For NISSAN vehicle

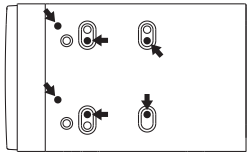

For TOYOTA vehicle

❑ *Installing the Main Unit in a NISSAN Vehicle*

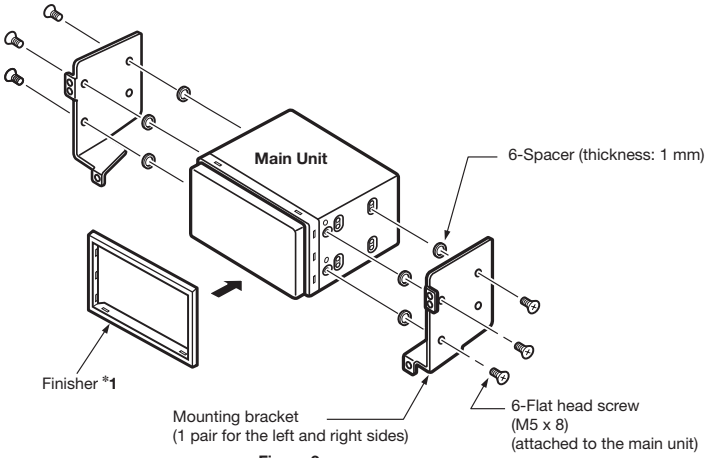

Figure 3

*1 Position the face panel with its wide edge at the bottom. Fit the edge into the groove of the main unit.

❑ *Installing the Main Unit in a TOYOTA Vehicle*

Install by using parts attached to the vehicle. (Screws marked ★ are attached to the vehicle.)

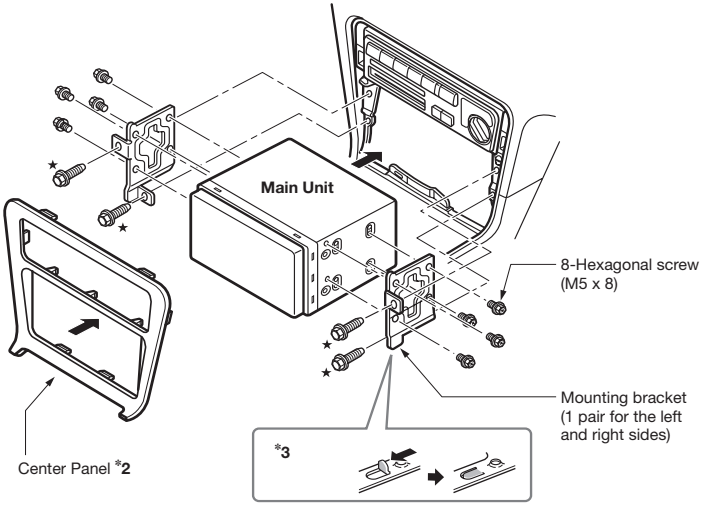

Figure 4

*2 Some panel openings are too small for the unit depending on the vehicle type and model. In such a case, trim the upper and lower sides of the panel frame by about 0.5 to 1.5 mm so the unit can be inserted smoothly.

*3 If a hook on the installation bracket interferes with the unit, bend and flatten it with a nipper or similar tool.

Typical Mounting Brackets

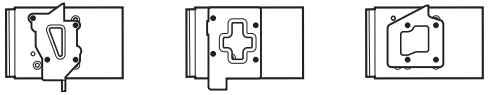

Example 1 **Example 2** **Example 3**

Affix the screws to the ● marks.

❑ *Vehicles other than NISSAN and TOYOTA*

In some cases the center panel may require modification. (Trimming, filing, etc.)

6. REMOVING THE MAIN UNIT

When the main unit is to be removed, disassemble it in the reverse of the order in "INSTALLING THE MAIN UNIT".→ P.58

7. CAUTIONS ON WIRING

- Be sure to turn the power off before wiring.
  Be particularly careful where you route the wires.
- Keep them well away from the engine, and exhaust pipe, etc. Heat may damage the wires.
- If the fuse should blow, check to see if the wiring is correct.
  If a fuse is blown, replace it with a new one of the same specification as the original.
- To replace the fuse, remove the old fuse of the power supply cable and insert the new one. (Figure 5)

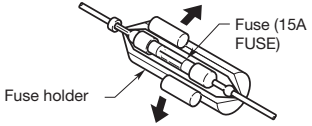

Figure 5

- There are various types of fuse holder. Do not let the battery side touch other metal parts.

⚠ CAUTION

- **After connecting the HDMI and USB cables to the unit, use a cable tie to tie them down. (Figure 6)**

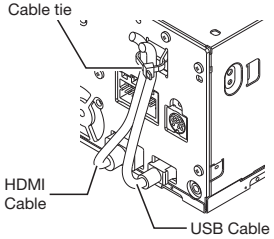

Figure 6

8. INSTALLING THE GPS ANTENNA (NX604 ONLY)

⚠ WARNING

- **Do not install the GPS antenna in a place where it may interfere with the operation of the airbag or hinder the driver's visual range.**
- **Do not use the navigation system with the GPS antenna cable cut off. The power line in the cable may be short-circuited.**

- The supplied GPS antenna is for installation inside the vehicle. Do not install it outside the vehicle.
- Install the GPS antenna more than 19.7in (50 cm) away from the main unit, other audio devices such as CD player, and a radar detector. If it is installed near these devices, GPS reception may be impaired.
- To improve the GPS signal reception, install the GPS antenna horizontally on a flat plane.
- Do not wax or paint the cover of the GPS antenna. This may reduce the performance of the GPS antenna.
- Install the GPS antenna at least 3.9in (10 cm) away from the windshield.
- Wipe off the dirt of the mounting surface before installing the GPS antenna.

- Stick the double-sided tape to the bottom face of the GPS antenna.

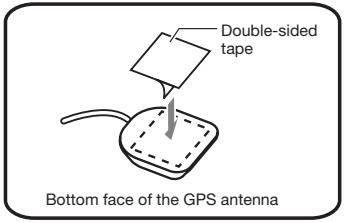

- Mount the GPS antenna.
  Stick it surely on a flat plane of the passenger-side dashboard where GPS signal interruption is minimized.
- Wire the GPS antenna cable.
  Fasten the cable using the Cable holders.

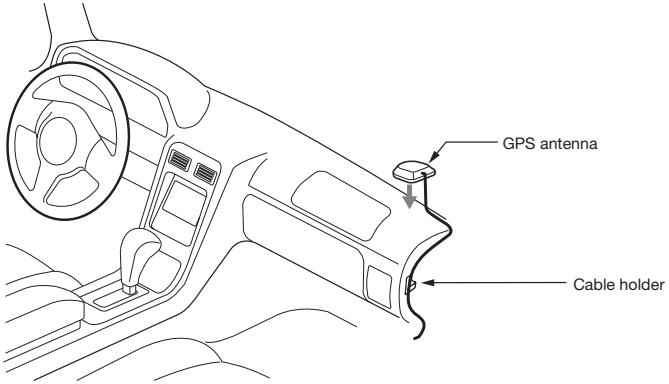

9. WIRE CONNECTION

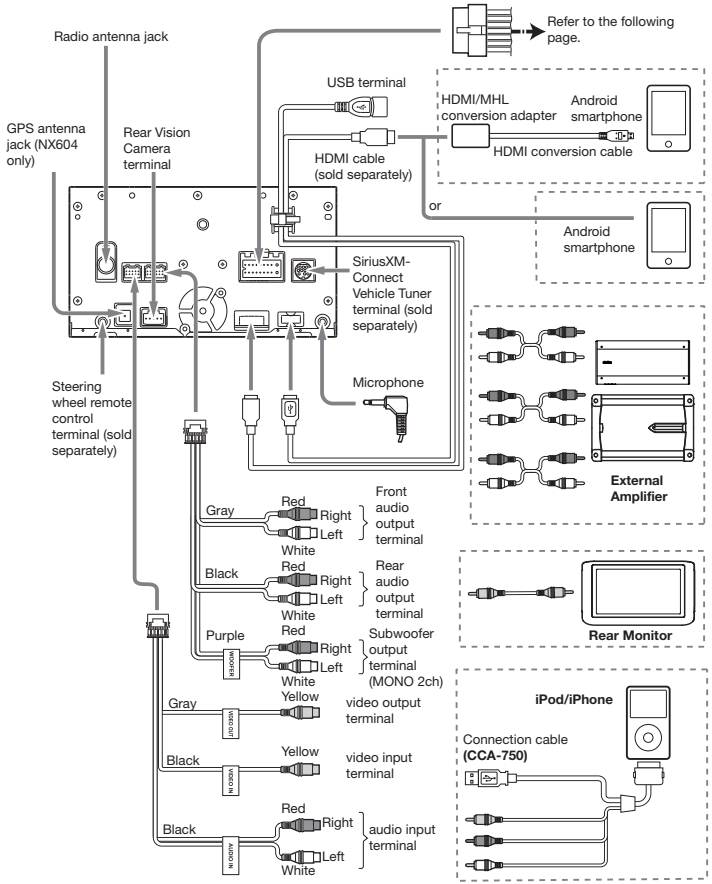

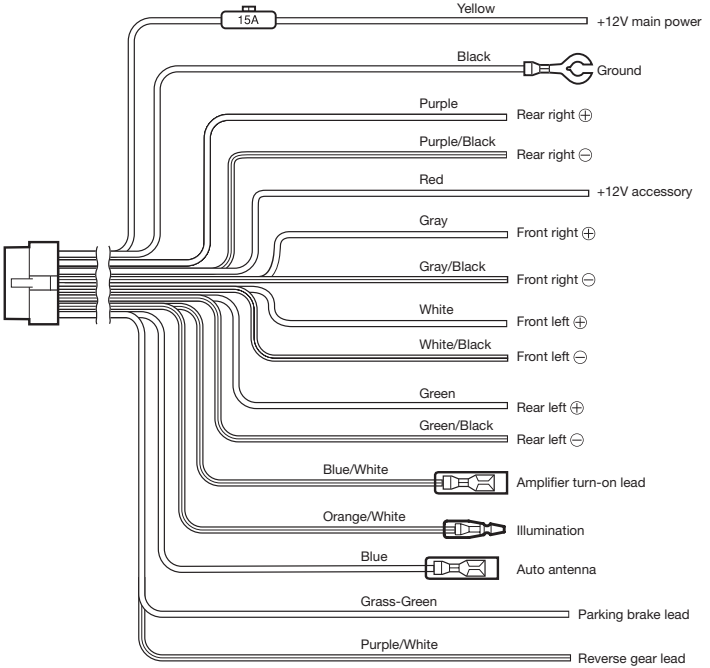

See next page for how to connect the parking brake lead.

Connecting the parking brake lead

Connect the lead to parking brake lamp ground in the meter panel.

- Connecting the parking brake lead to lamp ground allows you to watch video images when the parking brake is engaged.
- When the parking brake lead is not connected, the monitor will not display video images.
- If "**Audio Only**" appears on the screen just after turning on the ACC power of the car, release the parking brake while confirming safety, and then engage the parking brake again.

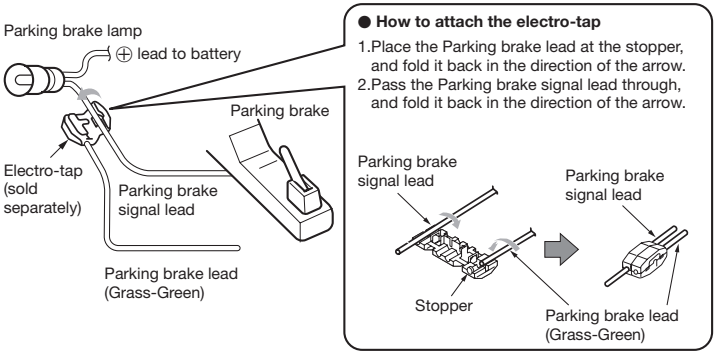

❏ *Connecting the Accessories*

Connection to the Rear Vision Camera for vehicle

The Rear Vision Camera for vehicle can be connected to optional Rear Vision Camera input cable (CCA-644) with RCA pin cable. For detailed information, refer to the instruction sheet or manual for the Rear Vision Camera.

- Be sure to connect the reverse gear lead to the vehicle's relevant terminal.
- Connect the Rear Vision Camera to the RCA pin cable; if not, the screen turns black while the gearshift lever is in the reverse gear position.

SiriusXM-Connect Vehicle Tuner

Connect this tuner to SiriusXM-Connect Vehicle Tuner terminal.
For more information on how to install the SiriusXM Connect Vehicle tuner, consult the installation guide included with the tuner.