Operation

Marine Generator Sets

Models:

6EKOD
9–11EKOZD
5EFKOD
7–9EFKOZD

ISO 9001
KOHLER POWER SYSTEMS
NATIONALLY REGISTERED

KOHLER®
Power Systems

TP-6772 8/17c

California Proposition 65

⚠ WARNING

Engine exhaust from this product contains chemicals known to the State of California to cause cancer, birth defects, or other reproductive harm.

California Proposition 65

⚠ WARNING

This product contains and/or emits chemicals known to the State of California to cause cancer, birth defects, or other reproductive harm.

California Proposition 65

⚠ WARNING

Breathing diesel engine exhaust exposes you to chemicals known to the State of California to cause cancer and birth defects or other reproductive harm.

- Always start and operate the engine in a well-ventilated area.
- If in an enclosed area, vent the exhaust to the outside.
- Do not modify or tamper with exhaust system.
- Do not idle the engine except as necessary.
  For more information go to www.P65warnings.ca.gov/diesel

Product Identification Information

Product identification numbers determine service parts. Record the product identification numbers in the spaces below immediately after unpacking the products so that the numbers are readily available for future reference. Record field-installed kit numbers after installing the kits.

Generator Set Identification Numbers

Record the product identification numbers from the generator set nameplate(s).

Model Designation _____

Specification Number _____

Serial Number _____

Accessory Number	Accessory Description

Engine Identification

Record the product identification information from the engine nameplate.

Manufacturer _____

Model Designation _____

Serial Number _____

x:in:007:001

Table of Contents

Product Identification Information 2

Safety Precautions and Instructions 5

Introduction 9

Service Assistance 10

Maintenance and Service Parts/Related Literature 11

Section 1 Service Views 13

Section 2 Operation 15

2.1 Prestart Checklist 15
2.2 Marine Inspection 16
2.3 Angular Operation 16
2.4 Operation in European Union Member Countries 16
2.5 Load Profile 16
2.6 Advanced Digital Control IId Operation 17
2.6.1 Controls and Indicators 17
2.6.2 Starting the Generator Set 18
2.6.3 Stopping the Generator Set 19
2.6.4 Fault Shutdowns and Warnings 19
2.6.5 Digital Display 21
2.6.6 Controller Fault Diagnostics 23
2.6.7 Communication Port 25
2.6.8 Fuses 25
2.7 Controller Logic Specifications 25
2.7.1 Fault Shutdown and Warning Specifications 25
2.7.2 Controller Resetting (Following System Fault Shutdown) 29
2.7.3 Voltage Regulator and Calibration Specifications 29
2.7.4 Voltage Regulator Adjustments 29
2.7.5 System Fault Warning Lamp with Digital Displays 30
2.7.6 System Fault Shutdown Lamp With Digital Displays 31
2.7.7 Status and Notice Digital Displays 32
2.8 Menu Displays 33
2.9 Monitoring and Programming Setup 35
2.9.1 PC Communications 35
2.10 Reviewing Menu Displays 35
2.10.1 Error Messages 35
2.10.2 Overview 36
2.10.3 Engine Metering 36
2.10.4 Generator Metering (and Calibration) 37
2.10.5 GenSet Information 38
2.10.6 GenSet Run Time 38
2.10.7 GenSet System 38
2.10.8 Voltage Regulator 39
2.10.9 Event Log 39
2.10.10 Prime Menu 40
2.10.11 Volt Select 40
2.10.12 USB Flowchart 41

Section 3 Scheduled Maintenance 43

3.1 General Maintenance 43
3.2 Service Schedule—6-11EKOD/EKOZD & 5-9EFKOD/EFKOZD Models 44
3.3 Lubrication System 46
3.3.1 Oil Specifications 46
3.3.2 Oil Check 46
3.3.3 Oil Change 47

3.4 Fuel System 48
3.4.1 Fuel Specifications 48
3.4.2 Fuel Filter 48
3.4.3 Fuel System Bleed 49
3.5 Exhaust System 50
3.6 Cooling System 51
3.6.1 Closed Heat Exchanger 51
3.6.2 Checking and Filling Coolant 51
3.6.3 Flushing and Cleaning 51
3.6.4 Pressure Cap 52
3.6.5 Seawater Pump 52
3.6.6 Siphon Break 53
3.6.7 Anticorrosion Zinc Anode 55
3.7 Belt Tension 56
3.7.1 Seawater Pump Belt Tensioning Procedure 56
3.8 Battery 57
3.9 Generator Storage Procedure 57

Section 4 Troubleshooting 59
4.1 Fault Codes 59

Section 5 Wiring Diagrams 63
5.1 Wiring Diagram Reference 63

Appendix A Abbreviations 71

Appendix B Operating Hour Service Log 73

Appendix C Voltage Regulator Definitions and Adjustments 74

IMPORTANT SAFETY INSTRUCTIONS. Electromechanical equipment, including generator sets, transfer switches, switchgear, and accessories, can cause bodily harm and pose life-threatening danger when improperly installed, operated, or maintained. To prevent accidents be aware of potential dangers and act safely. Read and follow all safety precautions and instructions. SAVE THESE INSTRUCTIONS.

This manual has several types of safety precautions and instructions: Danger, Warning, Caution, and Notice.

DANGER

Danger indicates the presence of a hazard that ***will cause severe personal injury, death***, or ***substantial property damage***.

WARNING

Warning indicates the presence of a hazard that ***can cause severe personal injury, death,*** or ***substantial property damage***.

CAUTION

Caution indicates the presence of a hazard that ***will*** or ***can cause minor personal injury*** or ***property damage***.

NOTICE

Notice communicates installation, operation, or maintenance information that is safety related but not hazard related.

Safety decals affixed to the equipment in prominent places alert the operator or service technician to potential hazards and explain how to act safely. The decals are shown throughout this publication to improve operator recognition. Replace missing or damaged decals.

Accidental Starting

WARNING

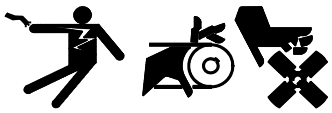

Accidental starting.
Can cause severe injury or death.

Disconnect the battery cables before working on the generator set. Remove the negative (–) lead first when disconnecting the battery. Reconnect the negative (–) lead last when reconnecting the battery.

Disabling the generator set. Accidental starting can cause severe injury or death. Before working on the generator set or equipment connected to the set, disable the generator set as follows: (1) Move the generator set master switch to the OFF position. (2) Disconnect the power to the battery charger. (3) Remove the battery cables, negative (–) lead first. Reconnect the negative (–) lead last when reconnecting the battery. Follow these precautions to prevent starting of the generator set by an automatic transfer switch, remote start/stop switch, or engine start command from a remote computer.

Engine Backfire/Flash Fire

WARNING

Risk of fire.
Can cause severe injury or death.

Do not smoke or permit flames or sparks near fuels or the fuel system.

Servicing the fuel system. A flash fire can cause severe injury or death. Do not smoke or permit flames or sparks near the fuel injection system, fuel line, fuel filter, fuel pump, or other potential sources of spilled fuels or fuel vapors. Catch fuels in an approved container when removing the fuel line or fuel system.

Servicing the air cleaner. A sudden backfire can cause severe injury or death. Do not operate the generator set with the air cleaner/silencer removed.

Combustible materials. A sudden flash fire can cause severe injury or death. Do not smoke or permit flames or sparks near the generator set. Keep the compartment and the generator set clean and free of debris to minimize the risk of fire. Catch fuels in an approved container. Wipe up spilled fuels and engine oil.

Combustible materials. A fire can cause severe injury or death. Generator set engine fuels and fuel vapors are flammable and explosive. Handle these materials carefully to minimize the risk of fire or explosion. Equip the compartment or nearby area with a fully charged fire extinguisher. Select a fire extinguisher rated ABC or BC for electrical fires or as recommended by the local fire code or an authorized agency. Train all personnel on fire extinguisher operation and fire prevention procedures.

Exhaust System

WARNING

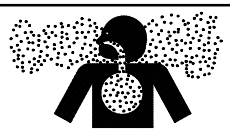

Carbon monoxide.
Can cause severe nausea, fainting, or death.

The exhaust system must be leakproof and routinely inspected.

Carbon monoxide symptoms. Carbon monoxide can cause severe nausea, fainting, or death. Carbon monoxide is a poisonous gas present in exhaust gases. Carbon monoxide is an odorless, colorless, tasteless, nonirritating gas that can cause death if inhaled for even a short time. Carbon monoxide poisoning symptoms include but are not limited to the following:

- Light-headedness, dizziness
- Physical fatigue, weakness in joints and muscles
- Sleepiness, mental fatigue, inability to concentrate or speak clearly, blurred vision
- Stomachache, vomiting, nausea

If experiencing any of these symptoms and carbon monoxide poisoning is possible, seek fresh air immediately and remain active. Do not sit, lie down, or fall asleep. Alert others to the possibility of carbon monoxide poisoning. Seek medical attention if the condition of affected persons does not improve within minutes of breathing fresh air.

Inspecting the exhaust system. Carbon monoxide can cause severe nausea, fainting, or death. For the safety of the craft's occupants, install a carbon monoxide detector. Never operate the generator set without a functioning carbon monoxide detector. Inspect the detector before each generator set use.

Operating the generator set. Carbon monoxide can cause severe nausea, fainting, or death. Be especially careful if operating the generator set when moored or anchored under calm conditions because gases may accumulate. If operating the generator set dockside, moor the craft so that the exhaust discharges on the lee side (the side sheltered from the wind). Always be aware of others, making sure your exhaust is directed away from other boats and buildings.

Fuel System

⚠ WARNING

Explosive fuel vapors.
Can cause severe injury or death.

Use extreme care when handling, storing, and using fuels.

The fuel system. Explosive fuel vapors can cause severe injury or death. Vaporized fuels are highly explosive. Use extreme care when handling and storing fuels. Store fuels in a well-ventilated area away from spark-producing equipment and out of the reach of children. Never add fuel to the tank while the engine is running because spilled fuel may ignite on contact with hot parts or from sparks. Do not smoke or permit flames or sparks to occur near sources of spilled fuel or fuel vapors. Keep the fuel lines and connections tight and in good condition. Do not replace flexible fuel lines with rigid lines. Use flexible sections to avoid fuel line breakage caused by vibration. Do not operate the generator set in the presence of fuel leaks, fuel accumulation, or sparks. Repair fuel systems before resuming generator set operation.

Draining the fuel system. Explosive fuel vapors can cause severe injury or death. Spilled fuel can cause an explosion. Use a container to catch fuel when draining the fuel system. Wipe up spilled fuel after draining the system.

Hazardous Noise

⚠ CAUTION

Hazardous noise.
Can cause hearing loss.

Never operate the generator set without a muffler or with a faulty exhaust system.

Hazardous Voltage/ Moving Parts

⚠ WARNING

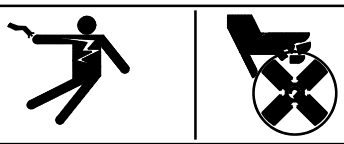

Hazardous voltage. Moving parts.
Can cause severe injury or death.

Operate the generator set only when all guards and electrical enclosures are in place.

Servicing the generator set when it is operating. Exposed moving parts can cause severe injury or death. Keep hands, feet, hair, clothing, and test leads away from the belts and pulleys when the generator set is running. Replace guards, screens, and covers before operating the generator set.

Grounding electrical equipment. Hazardous voltage can cause severe injury or death. Electrocution is possible whenever electricity is present. Ensure you comply with all applicable codes and standards. Electrically ground the generator set, transfer switch, and related equipment and electrical circuits. Turn off the main circuit breakers of all power sources before servicing the equipment. Never contact electrical leads or appliances when standing in water or on wet ground because these conditions increase the risk of electrocution.

Disconnecting the electrical load. Hazardous voltage can cause severe injury or death. Disconnect the generator set from the load by turning off the line circuit breaker or by disconnecting the generator set output leads from the transfer switch and heavily taping the ends of the leads. High voltage transferred to the load during testing may cause personal injury and equipment damage. Do not use the safeguard circuit breaker in place of the line circuit breaker. The safeguard circuit breaker does not disconnect the generator set from the load.

Short circuits. Hazardous voltage/current can cause severe injury or death. Short circuits can cause bodily injury and/or equipment damage. Do not contact electrical connections with tools or jewelry while making adjustments or repairs. Remove all jewelry before servicing the equipment.

Electrical backfeed to the utility. Hazardous backfeed voltage can cause severe injury or death. Connect the generator set to the building/marina electrical system only through an approved device and after the building/marina main switch is turned off. Backfeed connections can cause severe injury or death to utility personnel working on power lines and/or personnel near the work area. Some states and localities prohibit unauthorized connection to the utility electrical system. Install a ship-to-shore transfer switch to prevent interconnection of the generator set power and shore power.

Testing live electrical circuits. Hazardous voltage or current can cause severe injury or death. Have trained and qualified personnel take diagnostic measurements of live circuits. Use adequately rated test equipment with electrically insulated probes and follow the instructions of the test equipment manufacturer when performing voltage tests. Observe the following precautions when performing voltage tests: (1) Remove all jewelry. (2) Stand on a dry, approved electrically insulated mat. (3) Do not touch the enclosure or components inside the enclosure. (4) Be prepared for the system to operate automatically.
(600 volts and under)

Hot Parts

⚠ WARNING

Hot coolant and steam.
Can cause severe injury or death.

Before removing the pressure cap, stop the generator set and allow it to cool. Then loosen the pressure cap to relieve pressure.

Notice

NOTICE

Fuse replacement. Replace fuses with fuses of the same ampere rating and type (for example: 3AB or 314, ceramic). Do not substitute clear glass-type fuses for ceramic fuses. Refer to the wiring diagram when the ampere rating is unknown or questionable.

NOTICE

Saltwater damage. Saltwater quickly deteriorates metals. Wipe up saltwater on and around the generator set and remove salt deposits from metal surfaces.

Notes

This manual provides operation instructions for 6EKOD, 9–11EKOZD and 5EFKOD, 7–9EFKOZD model generator sets.

Refer to the engine operation manual for generator set engine scheduled maintenance information.

Information in this publication represents data available at the time of print. Kohler Co. reserves the right to change this publication and the products represented without notice and without any obligation or liability whatsoever.

Read this manual and carefully follow all procedures and safety precautions to ensure proper equipment operation and to avoid bodily injury. Read and follow the Safety Precautions and Instructions section at the beginning of this manual. Keep this manual with the equipment for future reference.

The generator set specification sheets provide specific generator and engine information. Refer to the spec sheet for data not supplied in this manual. Consult the generator set service manual, engine operation manual, and engine service manual for additional specifications. Obtain copies of the latest spec sheets, manuals, diagrams, and drawings from your local distributor/dealer.

The equipment service requirements are very important to safe and efficient operation. Inspect the parts often and perform required service at the prescribed intervals. Obtain service from an authorized service distributor/dealer to keep equipment in top condition.

Before installing a marine generator set, obtain the most current installation manual from your local distributor/dealer. Only qualified persons should install the generator set.

Service Assistance

For professional advice on generator set power requirements and conscientious service, please contact your nearest Kohler distributor or dealer.

- Consult the Yellow Pages under the heading Generators—Electric.
- Visit the Kohler Power Systems website at KOHLERPower.com.
- Look at the labels and decals on your Kohler product or review the appropriate literature or documents included with the product.
- Call toll free in the US and Canada 1-800-544-2444.
- Outside the US and Canada, call the nearest regional office.

Headquarters Europe, Middle East, Africa (EMEA)
Kohler Power Systems Netherlands B.V.
Kristallaan 1
4761 ZC Zevenbergen
The Netherlands
Phone: (31) 168 331630
Fax: (31) 168 331631

Asia Pacific
Power Systems Asia Pacific Regional Office
Singapore, Republic of Singapore
Phone: (65) 6264-6422
Fax: (65) 6264-6455

China
North China Regional Office, Beijing
Phone: (86) 10 6518 7950
(86) 10 6518 7951
(86) 10 6518 7952
Fax: (86) 10 6518 7955

East China Regional Office, Shanghai
Phone: (86) 21 6288 0500
Fax: (86) 21 6288 0550

India, Bangladesh, Sri Lanka
India Regional Office
Bangalore, India
Phone: (91) 80 3366208
(91) 80 3366231
Fax: (91) 80 3315972

Japan, Korea
North Asia Regional Office
Tokyo, Japan
Phone: (813) 3440-4515
Fax: (813) 3440-2727

Maintenance and Service Parts

Figure 1 identifies maintenance and service parts for your generator set. Obtain a complete list of maintenance and service parts from your authorized generator distributor/dealer.

Part Description	Models			
	6EKOD and 5EFKOD (1 Phase)	9EKOZD and 7EFKOZD (1 Phase)	11EKOZD and 9EFKOZD (1 Phase)	11EKOZD and 9EFKOZD (3 Phase)
Fuse: Auxiliary Winding (F1) 10 Amp	358337	358337	358337	358337
Fuse: Controller, Fuel Pump, and Fuel Shutoff Solenoid (F2) 20 Amp	GM39266	GM39266	GM39266	GM39266
Fuse: Customer Connection (F3) 5 Amp	239298	239298	239298	239298
Fuel Filter Element	ED0021752880-S	ED0021752880-S	ED0021752880-S	ED0021752880-S
Oil Filter	ED0021752850-S	ED0021752850-S	ED0021752850-S	ED0021752850-S
Seawater Pump Impeller Kit	229826	229826	229826	229826
V-Belt (Seawater Pump)	229125	229125	229125	229125
Zinc Anode	ED0090802150-S	ED0090802150-S	ED0090802150-S	ED0090802150-S

Figure 1 Maintenance and Service Parts

x:in:001:004

List of Related Literature

Figure 2 identifies related literature available for the generator sets covered in this manual. Only trained and qualified personnel should install or service the generator set.

Literature Type	Models			
	6EKOD and 5EFKOD (1 Phase)	9EKOZD and 7EFKOZD (1 Phase)	11EKOZD and 9EFKOZD (1 Phase)	11EKOZD and 9EFKOZD (3 Phase)
Specification Sheet	G2-147	G2-148	G2-149	G2-150
Installation Manual	TP-6773			
Operation Manual	TP-6772			
Parts Catalog*	TP-6775			
Service Manual (Engine)	TP-6776			
Service Manual (Generator)	TP-6774			
SiteTech™ Software Operation Manual	TP-6701			

* Includes generator and engine information.

Figure 2 Generator Set Literature

x:in:001:005

Notes

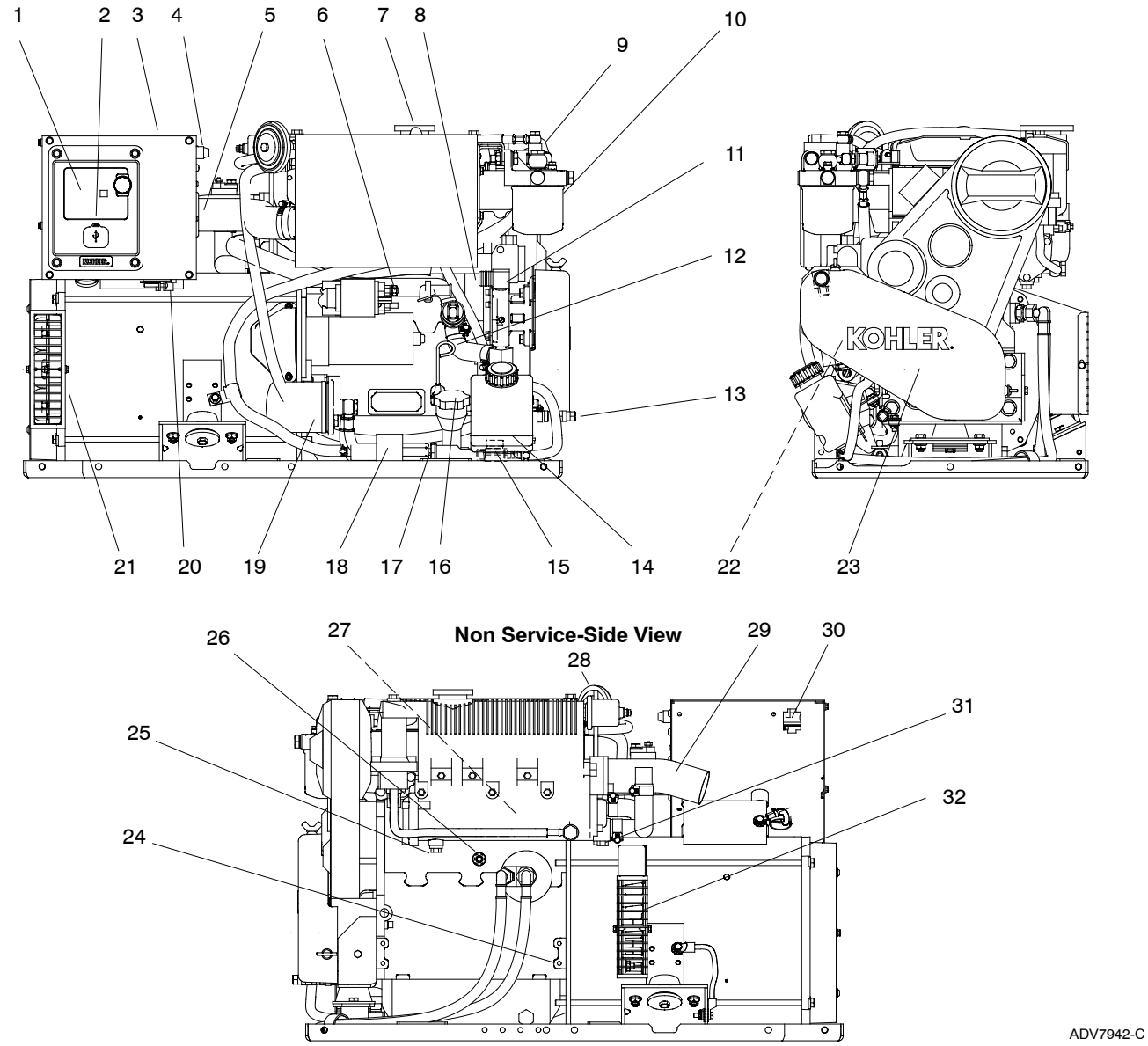

1. ADC-IId controller
2. USB port
3. Nameplate (on top of controller)
4. Fuses (F1, F2, and F3)
5. AC circuit breaker panel
6. Battery positive (+) connection
7. Coolant fill/coolant overflow tube
8. Seawater inlet
9. Fuel solenoid
10. Fuel filter
11. Seawater pump
12. Oil check/dipstick
13. Fuel return
14. Coolant overflow bottle
15. Oil drain valve
16. Oil fill
17. Fuel inlet
18. Fuel feed pump
19. Oil filter
20. Customer load lead connection
21. Alternator cooling air inlet
22. V-belt
23. Belt guard
24. Battery negative (–) connection
25. Seawater drain
26. Engine coolant drain
27. Heat exchanger internal to exhaust manifold
28. Lifting eye
29. Mixing elbow (water outlet/exhaust outlet)
30. Customer interface
31. Anticorrosion zinc anode
32. Air outlet

Figure 1-1 Service Views—Typical

Note: Consult installation drawings in the spec sheet or installation manual for more details on fuel and battery connection points. Consult an authorized distributor/dealer or the service manual for items not shown.

⚠ WARNING

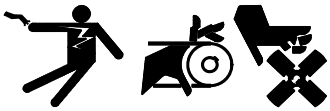

Accidental starting.
Can cause severe injury or death.

Disconnect the battery cables before working on the generator set. Remove the negative (–) lead first when disconnecting the battery. Reconnect the negative (–) lead last when reconnecting the battery.

Sound Shield Equipped Models: For access to the generator set to perform regular maintenance, remove the sound shield doors and roof.

Sound Shield Roof and Door Removal

1. Open the service-side door.
2. Release the two wing nuts (if equipped) located underneath the roof. See Figure 1-2.
3. Lift up the roof.
4. Slide the roof towards the service side of the unit for removal.
5. Open the front, rear, and non-service side doors as needed.

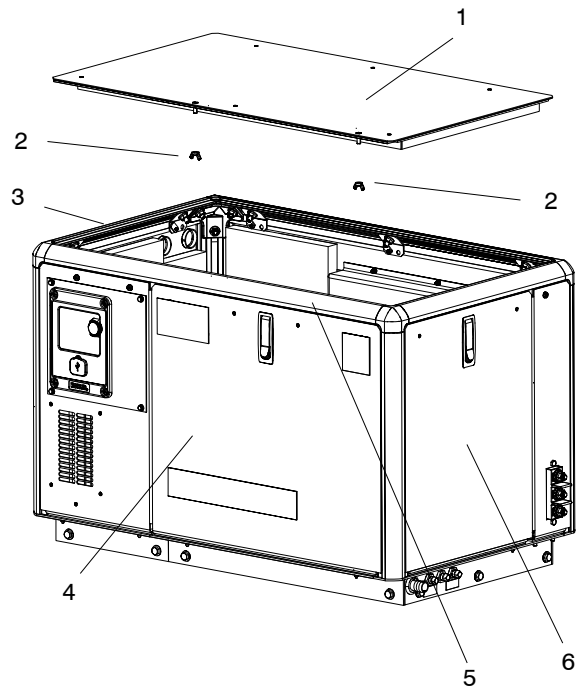

1. Sound shield roof
2. Wing nut, if equipped
3. Alternator-end door
4. Service-side door
5. Front rail
6. Engine-end door

Figure 1-2 Sound Shield Roof Removal

2.1 Prestart Checklist

⚠ WARNING

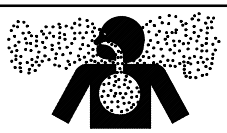

Carbon monoxide.
Can cause severe nausea, fainting, or death.

The exhaust system must be leakproof and routinely inspected.

Operating the generator set. Carbon monoxide can cause severe nausea, fainting, or death. Be especially careful if operating the generator set when moored or anchored under calm conditions because gases may accumulate. If operating the generator set dockside, moor the craft so that the exhaust discharges on the lee side (the side sheltered from the wind). Always be aware of others, making sure your exhaust is directed away from other boats and buildings.

To ensure continued satisfactory operation perform the following checks or inspections before or at each startup, as designated, and at the intervals specified in the service schedule. In addition, some checks require verification after the unit starts.

Air Inlets. Check for clean and unobstructed air inlets.

Battery. Check for tight battery connections. Consult the battery manufacturer's instructions regarding battery care and maintenance.

Coolant Level. Check the coolant level according to the cooling system maintenance information.

Drive Belt. Check the belt condition and tension of the water pump belt.

Exhaust System. Check for exhaust leaks and blockages. Check the silencer and piping condition and check for tight exhaust system connections.

Inspect the exhaust system components (exhaust manifold, mixing elbow, exhaust line, hose clamps, silencer, and outlet flapper) for cracks, leaks, and corrosion.

- Check the hoses for softness, cracks, leaks, or dents. Replace the hoses as needed.
- Check for corroded or broken metal parts and replace them as needed.
- Check for loose, corroded, or missing clamps. Tighten or replace the hose clamps and/or hangers as needed.
- Check that the exhaust outlet is unobstructed.
- Visually inspect for exhaust leaks *(blowby)*. Check for carbon or soot residue on exhaust components. Carbon and soot residue indicates an exhaust leak. Seal leaks as needed.
- Ensure that the carbon monoxide detector(s) is (1) in the craft, (2) functional, and (3) energized whenever the generator set operates.

For your safety: Never operate the generator set without a functioning carbon monoxide detector(s) for your safety and the safety of others on your vessel.

Fuel Level. Check the fuel level and keep the tank(s) full to ensure adequate fuel supply.

Oil Level. Maintain the oil level at or near, not over, the full mark on the dipstick.

Operating Area. Check for obstructions that could block the flow of cooling air. Keep the air intake area clean. Do not leave rags, tools, or debris on or near the generator set.

Seawater Pump Priming. Prime the seawater pump before initial startup. To prime the pump: (1) close the seacock, (2) remove the hose from the seawater-filter outlet, (3) fill the hose and seawater pump with clean water, (4) reconnect the hose to the water filter outlet, and (5) open the seacock. Confirm seawater pump operation on startup as indicated by water discharge from the exhaust outlet.

2.2 Marine Inspection

Kohler Co. recommends that all boat owners have their vessels inspected at the start of each boating season by the US Coast Guard, the local Coast Guard Auxiliary, or local state agency.

Kohler Co. also recommends having the generator's exhaust system inspected at the start of each boating season by an authorized Kohler® distributor/dealer. Repair any problems identified before operating the generator set.

⚠ WARNING

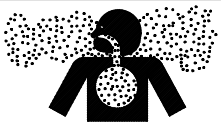

Carbon monoxide.
Can cause severe nausea, fainting, or death.

The exhaust system must be leakproof and routinely inspected.

2.3 Angular Operation

See Figure 2-1 for angular operation limits.

Instant Operation (up to 1 min.)	Intermittent Operation (up to 30 min.)
35°	25°

Figure 2-1 Angular Operation

2.4 Operation in European Union Member Countries

This generator set is specifically intended and approved for operation below the deck in the engine compartment. Operation above the deck and/or outdoors would constitute a violation of European Union Directive 2000/14/EC noise emission standard.

2.5 Load Profile

Whenever operating the generator set, Kohler Co. recommends maintaining the minimum load profile indicated in Figure 2-1. Maintaining the load profile prevents corrosion formation on internal engine components when they're exposed to the breakdown of exhaust gases. Extended light loading may result in engine "wet stacking".

Minimum Load Requirement	Ideal Load Requirement
30% load	70% load or more

Figure 2-2 Load Profile

Unburned Fuel (Wet Stacking) occurs when water/fuel vapor condenses in the exhaust system. At normal combustion temperatures, water stays vaporized but at low combustion temperatures, it condenses back to a liquid. When running the generator set under normal loads (30% load or more) for long periods of time, diesel exhaust stays hot enough to prevent water/fuel vapor from condensing. Conversely, if the generator set is subjected to light loads (30% or less) for long periods of time, water/fuel vapors accumulate and may result in the following conditions to develop:

- Cylinder wall glazing
- Fuel on water
- Crankcase oil dilution
- Wet stacking

Note: Consult the engine manufacturer's guidelines for more details on unburned fuel and wet stacking.

The operator should perform all of the prestart checks. Start the generator set according to the starting procedure in the controller section of this manual. While the generator set is operating, listen for a smooth-running engine and visually inspect the generator set for fluid or exhaust leaks.

2.6 Advanced Digital Control IId Operation

Figure 2-3 illustrates the user interface on the Advanced Digital Control.

The controller is factory-set and should not require configuration or adjustment under normal operating conditions. If the generator set is reconnected to a different voltage and/or frequency, refer to an authorized Kohler distributor/dealer for system configuration and adjustment instructions.

Note: Have setup and adjustments of the Advanced Digital Control performed only by an authorized Kohler distributor/dealer.

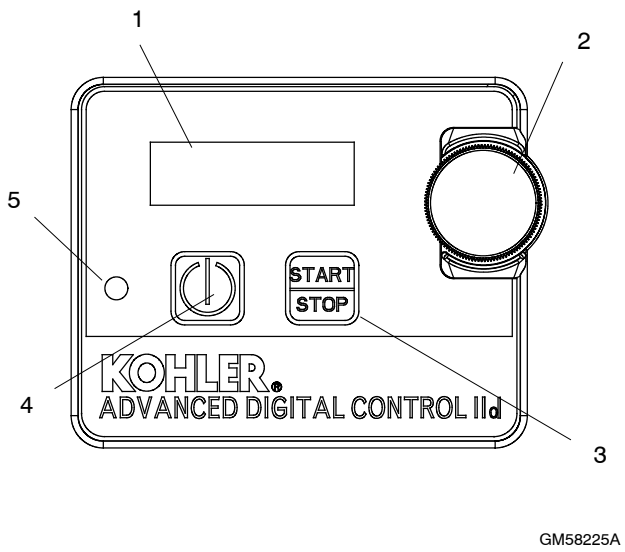

1. LCD digital display
2. Pushbutton/rotary selector dial
3. Engine start/stop button
4. Power button
5. LED status indicator

Figure 2-3 Advanced Digital Control IId

2.6.1 Controls and Indicators

LCD Digital Display. The LCD digital display is backlit any time the generator set is running or for at least 5 minutes after a user manipulates a button or the pushbutton/rotary selector dial. The LCD displays generator status, run time hours, fault shutdowns, and fault warnings.

Pushbutton/Rotary Selector Dial. This control provides access to the menus for monitoring. Press the selector dial to activate the digital display and to select choices shown on the display. Rotate the dial to navigate through the menus.

The pushbutton/rotary selector dial has several features and functions:

- Momentarily press the dial to activate the digital display if dark.
- Rotate the dial to navigate through the main menus—turn clockwise to go forward (down) and counterclockwise to go back (up). The menus do not wrap to the beginning.
- Press the dial at a given main menu to access the submenus within the selected main menu.
- When in the submenu, rotate the dial to navigate through the submenu—clockwise to go forward (down) and counterclockwise to go back (up). The menus do not wrap to the beginning.
- Momentarily press the dial when in the submenu to make a user selection choice (if available) or to go back to the respective main menu.
- After about 5 minutes of no user input (pushbutton/rotary selector dial or buttons), the menu resets to the top of the main menus and auto-paging activates for the Overview submenus.

Engine Start/Stop Button. The Engine Start/Stop button toggles the running state of the engine. When the controller is off, it has no effect. When the controller is in a low-power mode, the Engine Start/Stop button starts the engine. When the controller is in a low-power mode, the button may need to be pressed twice to start the engine.

Power Button. The Power button toggles the controller between on and off. When the controller is off, it does not respond to any input except the Power button.

Note: After about 5 minutes of no user input (pushbutton/rotary selector dial or buttons), the menu is reset to the top of the main menus and auto-paging activates for the Overview submenus.

Note: Measurements display in metric or English units. Use the Generator Set System menu to change the measurement display.

LED Status Indicator. The LED provides a summary of the generator state. Figure 2-4 shows the possible LED displays. When two or more colors are shown, the LED blinks between the two colors in 2-second intervals. The 2nd and 3rd (if any) colors are shown for 100 ms each and the 1st color appears for the remainder of the time.

Controller Power	Fault	Warning	Engine	LED Color(s)	Display		Mode
					Operational	Backlight Functional	
Off	N/A	N/A	Stopped	Black	No	No	Off
	No	None		Black/Green			Low Power Auto
	None	Yes		Black/Green/Red			Low Power Auto
	Yes	N/A		Black/Red			Low Power Auto
On	No	None	Stopped	Black/Green	Yes	No	USB Powered Auto
						Yes	Battery Powered Auto
			Running	Green	Yes	Yes	Battery Powered Auto
	None	Yes	Running	Green/Red	Yes	Yes	Battery Powered Auto
			Stopped	Black/Green/Red		No	USB Powered Auto
						Yes	Battery Powered Auto
	Yes	N/A	Stopped	Black/Red	Yes	No	USB Powered Auto
						Yes	Battery Powered Auto

NOTE: Under unique conditions, the controller may not operate normally. If this happens, the controller uses the red LED to represent the status code To show the status code, the controller holds the red LED for 5 seconds followed by a sequence of flashes that represents the status code:

1 flash = forced into bootloader
2 flashes = no application software
3 flashes = application code is invalid
4 flashes = RAM check failure
5 flashes = reformatting flash

See an authorized Kohler distributor/dealer.

Figure 2-4 Possible LED Status Indicator Displays

WARNING

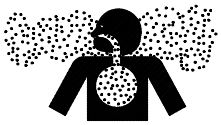

Carbon monoxide.
Can cause severe nausea, fainting, or death.

The exhaust system must be leakproof and routinely inspected.

Operating the generator set. Carbon monoxide can cause severe nausea, fainting, or death. Be especially careful if operating the generator set when moored or anchored under calm conditions because gases may accumulate. If operating the generator set dockside, moor the craft so that the exhaust discharges on the lee side (the side sheltered from the wind). Always be aware of others, making sure your exhaust is directed away from other boats and buildings.

2.6.2 Starting the Generator Set

The following procedures describe the actions required to start the generator set.

Note: Opening seacock. Before starting the generator set, open the seacock to allow cooling water passage. Failure to do so could damage the seawater pump impeller and cause serious engine overheating damage.

Note: Transfer switch. Check that the marine ship-to-shore transfer switch, if equipped, is in the ship position.

Note: If the generator set does not start after 3 crank attempts (an overcrank fault occurs):
1) Close the seacock.
2) Completely drain the water from the exhaust system at the silencer's drain plug.
3) Do not attempt generator set restart.
4) Contact an authorized Kohler® distributor/dealer.
A water-filled exhaust piping and silencer may further hinder generator starting and cause seawater entry into the engine cylinders through the exhaust valves. Water ingested into the engine may cause major engine damage that the Kohler Co. warranty does not cover.

The controller attempts to start the generator set three times. If the generator set does not start in three attempts, the system shuts down on an overcrank fault.

Local Starting.

1. Press the Power Button to turn the controller on. The LED Status Indicator appears green and begins flashing.

2. Press the Start/Stop Button to start the generator set. The Advanced Digital Control IId attempts to start the generator set in three crank cycles (crank cycle time is pre-programmed).

Remote Starting.

A remote start/stop switch (connected to P9 connector, leads 3 and 4) or a remote digital gauge (connected to P9 connector, pins 1, 2, and 5 via CAN) can be connected to the customer interface connection. See the wiring diagram in Section 5.

Note: A remote start/stop switch (connected to P9 connector, leads 3 and 4) is not available when configured for SmartCraft™ 1.

Press the Power Button to turn the controller on. Consult the instruction sheet supplied with the remote start/stop switch or remote digital gauge for starting instructions.

Note: The ADC IId allows three 7-second crank cycle attempts before the overcrank shutdown occurs.

Remote communications require an active (powered-up) controller. Be advised that the Advanced Digital Control IId enters a low-power state with an average current drain of approximately 100 uA.

The ADC IId will power down (0 mA draw) after 48 hours of inactivity. Press the start switch/button (once for the remote start/stop switch or twice for the remote digital gauge) to “wake up” the ADC IId and start the generator set.

2.6.3 Stopping the Generator Set

The following procedures describe the actions required to stop the generator set.

Local Stopping.

1. Run the generator set at no load for at least 2 minutes to ensure adequate engine cooldown.

2. Press the Start/Stop button to stop the generator set. The engine stops.

3. Press the Power Button to turn the controller off.

Remote Stopping.

1. Run the generator set at no load for at least 2 minutes to ensure adequate engine cooldown.

2. The generator set stops when the remote start/stop switch contacts close momentarily or when the remote digital gauge sends a stop command.

Consult the instruction sheet supplied with the remote start/stop switch or remote digital gauge for stopping instructions.

Note: ADC IId powers down after 48 hours of inactivity. If the generator has been started, the controller will power down 48 hours after the generator stops.

2.6.4 Fault Shutdowns and Warnings

The generator set shuts down automatically under the fault conditions listed in Figure 2-9 and the controller displays a fault code. The generator set cannot be restarted until the fault condition is corrected and the controller is reset. See Section 2.7.2 to reset the controller after a fault shutdown. The controller resets automatically after a battery voltage fault condition is corrected.

Shutdown conditions on the generator set automatically reset when the problem is corrected. The high engine temperature condition automatically resets when the generator set cools. However, the fault shutdowns do not clear until the controller is reset.

The controller displays warning text but the generator set does not shut down under the conditions shown in Figure 2-10.

System Warning Fault Lamp. Green/Red lamp identifies an existing fault condition that does not shut down the generator set. A continuing system warning fault condition may cause a system shutdown. Correct all system warnings as soon as practical.

See Section 2.7.5, System Fault Warning Lamp with Digital Displays, for definitions of the items listed. The following conditions cause a system warning:

- AC sensing loss
- High battery voltage
- High coolant temperature
- Low battery voltage
- Low cranking voltage
- Low oil pressure

System Shutdown Fault Lamp. Red lamp indicates that the generator set has shut down because of a fault condition. The unit will not start without resetting the controller, see Section 2.7.2, Controller Resetting procedure.

See Section 2.7.6, System Fault Shutdown Lamp with Digital Displays, for definitions of the items listed. The following conditions cause a system shutdown:

- AC sensing loss
- Auxiliary input (analog or digital)
- Engine over speed
- Engine under speed
- High coolant temperature
- High exhaust temperature
- Locked rotor (failed to crank)
- Low seawater pressure
- Low oil pressure
- Overcrank
- Overfrequency
- Overvoltage (each phase)
- Run relay coil shutdown
- Underfrequency
- Undervoltage (each phase)

2.6.5 Digital Display

The generator set must be running for some displays to indicate values. If the generator set is not running some values will display zero or N/A (not available).

The 12-character, 2-line backlit alpha-numeric display provides generator set and engine data, system status, and fault information. See Figure 2-3. The digital display shows abbreviations in some instances, refer to Section 2.7.1 Status Event and Fault Specifications for the abbreviations and their full descriptions.

Note: US/Metric Unit Display is selectable in Generator Set System.

Note: After about 5 minutes of no user input (pushbutton/rotary selector dial or buttons), the menu resets to the top of the main menus and auto-paging activates for the Overview submenus.

The main menus are listed below. Within each main menu are multiple submenus with descriptions following.

- Overview
- Engine Metering
- Generator Metering
- GenSet Information
- GenSet Run Time
- GenSet System
- Voltage Regulation
- Digital Inputs *(not applicable for units with ADC IId)*
- Digital Outputs *(not applicable for units with ADC IId)*
- Analog Inputs *(not applicable for units with ADC IId)*
- Event Log
- Prime
- Volt Select

Overview Menu

When a new shutdown or warning fault occurs, the auto-paging display feature activates.

Active **Shutdowns** display if any are present. This alerts the user to single or multiple shutdown fault conditions. See Section 2.7.6, System Shutdown Fault Lamp with Digital Displays for a list of possible shutdown faults.

Active **Warnings** display if any are present. This alerts the user to single or multiple warning fault conditions. See Section 2.7.5, System Warning Fault Lamp with Digital Displays for a list of possible warning faults.

Generator Set State displays the generator set status:

- Off
- Standby
- Running
- Cooldown
- Stopping

When the unit is cranking, the attempt number is displayed. When the unit is priming, the time remaining is displayed.

Average Volts Line-to-Line value displays. For three-phase configurations the average line-to-line voltage of L1, L2, and L3 is displayed. Single-phase configurations show the L1–L2 voltage.

Frequency (Hz) value displays for the output AC voltage.

Coolant Temperature diplays for the engine coolant temperature.

Oil Pressure displays the engine oil pressure.

Battery displays the DC voltage of the engine starting battery(ies).

Engine Run Time displays the total run time hours.

Next Maintenance displays the next maintenance timer in hours.

Software Version displays in the Overview menu. Use the version number to determine if an upgrade is needed and/or when troubleshooting the controller.

Engine Metering Menu

Engine Speed (Tachometer) displays the engine speed in RPM.

Oil Pressure displays the engine oil pressure. This value also shows in the Overview Menu.

Coolant Temperature displays the engine coolant temperature. This value also shows in the Overview Menu.

Battery displays the DC voltage of the engine starting battery(ies). This value also shows in the Overview Menu.

Generator Metering Menu

Volts displays the alternator output AC voltages. The display shows all line-to-line and line-to-neutral voltage combinations for three-phase or single-phase configurations.

Frequency (Hz) value displays for the output AC voltage. This value also shows in the Overview Menu.

Reset Calibration provides the means to reset the configuration values.

The calibration values are reviewable at all times and provide the calibration of the voltage sensing logic. Changing the system voltage or replacing the circuit board requires a calibration adjustment.

To enable calibration, start the generator set and select the *Volts L1-L2* display. Then push and hold the pushbutton/rotary selector dial until the *Calibration Enabled* popup appears. Calibration of each display is now available. The display will show the following values for three-phase generator sets. Single-phase generator sets will only display items marked (*).

- Volts L1-L2 *
- Volts L2-L3
- Volts L3-L1
- Volts L1-N
- Volts L2-N
- Volts L3-N

The user can change individual values or can select *Reset Calib?–Yes* to reset all values. The *Reset Calib?* display will only show if calibration is enabled. Refer to the requirements shown with Generator Set Calibration in 2.7.7 Status and Notice Digital Displays.

To disable calibration, Rotate the pushbutton/rotary selector dial until the *<–Return* popup appears. Momentarily press the pushbutton/rotary selector dial. Stop the generator set if not already done.

Generator Set Information Menu

GenSet M/N displays the generator set model number.

GenSet S/N displays the generator set serial number.

Controller S/N displays the controller serial number.

Generator Set Run Time Menu

Engine Run Time displays the total run time hours. This value also shows in the Overview Menu.

Engine Starts displays the total number of generator set startup events.

Next Maintenance displays the next maintenance timer. The maintenance interval for the ADC IId is 250 hours.

Generator Set System Menu

The values in these menus are user-entered for the generator set configuration and are NOT measured values of the generator set.

System Frequency displays the programmer-entered L1/L2/L3 output voltage frequency for three-phase or the L1/L2 output voltage frequency for single-phase.

Battery Voltage displays the engine electrical system 12 or 24 volts.

CAN A displays the remote communication's protocol in use (J1939, SmartCraft, or NMEA 2000).

Note: After changing the CAN A communication setting, power off and then power on the controller.

Measure Units displays the user selected unit of measure as Metric or English.

Contrast displays user selected resolution values to improve digital display clarity.

Voltage Regulator Menu

The voltage regulator value is reviewable at all times and provides the ability to fine adjust voltage. Changing the system voltage or replacing the circuit board typically requires a voltage adjustment.

To enable calibration, start the generator set and select the *VR Volt Adj, Volt/Hz, Gain, or Stabil* display. Then push and hold the pushbutton/rotary selector dial until the *Editing Enabled* popup appears. Editing of the Voltage Adjustment, Volts/Hz, Gain, and Stability is now available.

The user can change the individual value or can select *Reset VR?–Yes* to reset to the default value. The *Reset VR Settings* display will only show if editing is enabled.

To disable calibration, rotate the pushbutton/rotary selector dial until the *<–Return* popup appears. Momentarily press the pushbutton/rotary selector dial. Stop the generator set if not already done.

Event Log Menu

This menu allows the user to review up to 1000 entries of system events including shutdown faults, warning faults, and status events. See 2.6.6 Controller Fault Diagnostics for a list of the items that appear on the Event Log.

Prime Menu

This menu, if confirmed, allows the user to initiate the electric fuel pump to prime the fuel system.

Volt Select Menu

Note: The generator set must be stopped before changing the voltage selection.

This menu allows the user to readily change controller voltage settings.

Note: The generator set output leads require voltage reconnection. See the installation manual for voltage reconnection information.

With the generator set stopped, go to the Volt Select menu. Then push and hold the pushbutton/rotary selector dial until the voltage selection starts to flash. Volt selection is now available. Scroll to the desired voltage and momentarily press the pushbutton/rotary selector dial to confirm the voltage selection.

The displays for *Volt Select* appear as shown in the following list.

- 120/240 V 1 Ph (3 wire)
- 120/208 V 3 Ph (4 wire Wye)
- 139/240 V 3 Ph (Wye)
- 277/480 V 3 Ph (Wye)
- 120/240 V 3 Ph (Delta)
- 115/230 V 1 Ph (3 wire)
- 120 V 1 Ph (2 wire)
- 230 V 1 Ph (2 wire)
- 240 V 1 Ph (2 wire)
- 110/190 V 3 Ph (Wye)
- 127/220 V 3 Ph (Wye)
- 115/230 V 3 Ph (Delta)
- 230/400 V 3 Ph (Wye)
- 240/416 V 3 Ph (Wye)

2.6.6 Controller Fault Diagnostics

This table provides descriptions of the system events and their types—warning, shutdown, status, and notice.

Warnings show green/red fault lamp and signal an impending problem. **Shutdowns** show red fault lamp and stop the generator set. **Status** is an event that is not an alert but is part of the event history. **Notice** is an alert that is NOT part of the event history. System events are available as a **Relay Output** as shown.

Throughout this manual there are examples of the display text. In some cases, the message words and phrases are abbreviated or shortened to accommodate the number of characters in the 12 x 2 digital display. See the following table for a full description of the system event display messages.

System Events Display Message List

Description	Display Message	Warning Function	Shutdown Function	Status/ Notice	Relay Output
Engine Functions					
Engine over speed	Eng Speed High Shutdwn		X		X
Engine start aid active	Preheat			N	X
Engine under speed	Eng Speed Low Shutdwn		X		X
High battery voltage	Battery High Warning	X			X
High coolant temperature	Coolnt Temp High Warning	X			X
High coolant temperature	Coolnt Temp High Shutdwn		X		X
High exhaust temperature	Exh Temp High Shutdwn		X		X
Low battery voltage	Battery Low Warning	X			X
Low seawater pressure	Sea Pressure Low Shutdwn		X		X
Low cranking voltage	Lo Crank Vlt Warning	X			X
Low oil pressure	Oil Pres Low Warning	X			X
Low oil pressure	Oil Pres Low Shutdwn		X		X
Overcrank	Over Crank Shutdwn		X		X
General Functions					
Aux. inputs 0-5 VDC, 1 analog	Aux Input Shutdwn		X		X
Backup parameters loaded	Backup Pars Status			S	No
Engine start delay active	Start Delay Notice			N	X
Engine started	Engine Start Status			S	X
Engine stopped	Engine Stop Status			S	X
Generator running	Gen Running Notice			N	X
Remote start	Remote Start Status			S	X
System ready	System Ready Status			S	X
System timer failed	Timer Error Notice			N	X
Generator Functions					
AC sensing loss	AC Sens Loss Warning	X			X
AC sensing loss	AC Sens Loss Low Shutdwn		X		X
Locked rotor (failed to crank)	Locked Rotor Shutdwn		X		X
Overfrequency	Frequency High Shutdwn		X		X
Overvoltage (each phase)	Volts xx-xx High Shutdwn		X		X
Run relay coil shutdown	RunRelCoil Shutdwn		X		X
Underfrequency	Frequency Low Shutdwn		X		X
Undervoltage (each phase)	Volts xx-xx Low Shutdwn		X		X

* Some functions require optional input sensors or are engine ECM dependent on some generator set models.

2.6.7 Communication Port

The main logic circuit board contains a standard type B USB communication port for PC connections and a USB host connector for a mass-storage device connection. See Figure 2-6 and Figure 2-7. See Section 2.10.12 for USB flowchart information. Refer to the List of Related Materials in the Introduction for corresponding SiteTech™ software and/or communication installation information.

Note: Before inserting a mass-storage device (USB host connector), power off and then power on the controller.

See Figure 2-5 for tested/approved manufacturer's USB flash drive types that work with the ADC IId controller.

CustomUSB® (Kohler® Power Systems Part Number KW-A202)	2-GB "spin" full size
Imation®	4-GB full size
Lexar®	4-GB full size
PNY®	4-GB full size and micro
Verbatim®	4-GB full size and micro

Figure 2-5 USB Types Tested/Approved for ADC IId

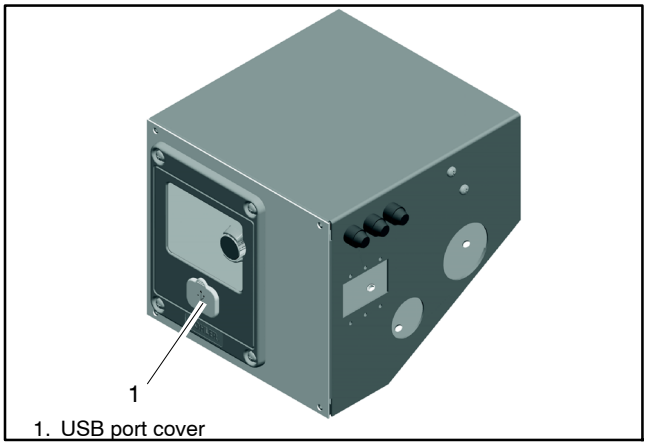

1. USB port cover

Figure 2-6 Communication Port

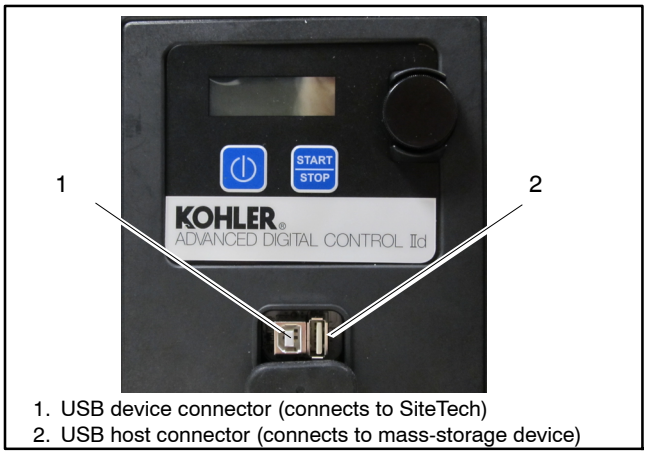

1. USB device connector (connects to SiteTech)
2. USB host connector (connects to mass-storage device)

Figure 2-7 ADC IId USB Identification

2.6.8 Fuses

Fuses are located on the side of the junction box. See Figure 2-8.

- **10-Amp (F1)** fuse protects the auxiliary winding.
- **20-Amp (F2)** fuse protects the controller circuits, fuel pump, and fuel shutoff solenoid.
- **5-Amp (F3)** fuse protects the customer connections.

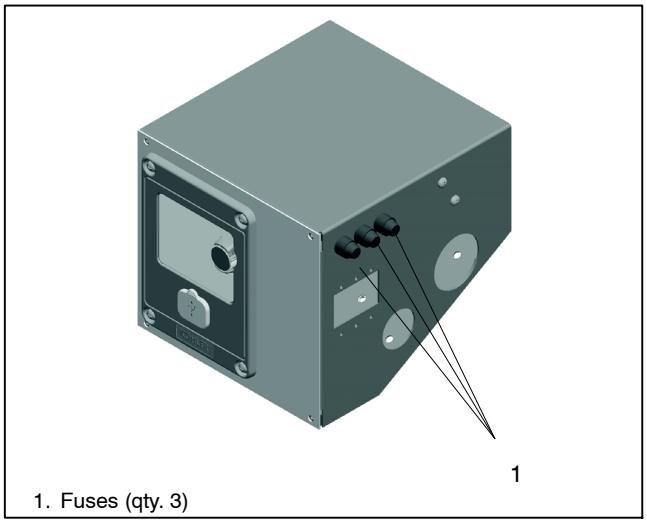

1. Fuses (qty. 3)

Figure 2-8 Fuses on the Side of the Junction Box

2.7 Controller Logic Specifications

Refer to Figure 2-9 for inhibit and time delays on fault shutdowns. Refer to Figure 2-10 for inhibit and time delays on warnings.

Inhibit Time Delay. The inhibit time delay is the time period following crank disconnect during which the generator set stabilizes and the controller does not detect a fault or status event. The inhibit time delay is not adjustable.

Time Delay (Shutdown or Warning). The time delay follows the inhibit time delay. The time delay is the time period between when the controller first detects a fault or status event and the controller warning or shutdown lamp illuminates. The time delay is not adjustable.

2.7.1 Fault Shutdown and Warning Specifications

The following list contains fault shutdown and warning specifications with time delays.

Fault Shutdowns							
Code	**Description**	**Sensing Mechanism**	**State(s) Detected**	**Inhibit Time**	**Delay Time**	**Trip Point**	**Check**
AC Sens Loss Low Shutdwn	The loss of AC voltage shutdown occurs when the controller does not detect the nominal generator AC output voltage for more than 3 seconds after crank disconnect.	Frequency over AC voltage	Post starting aid, running, cooldown	10 sec	3 sec	AC voltage reached AC system voltage and then drops below 5% of the trip point for low AC voltage fault/ shutdown	Contact an authorized distributor/dealer for service.
Aux Input Shutdwn	Auxiliary fault input shutdown. **Note:** Input from a customer-supplied switch that closes when the fault is active.	Digital input	Auto, fault, start delay, ECM start, starting aid, cranking, crank pause, post starting aid, running, cooldown	0 sec	2 sec	Switch closes (shorted-to-ground)	Check the cause of the auxiliary fault.
Coolant Temp High Shutdwn	High coolant temperature shutdown occurs if the engine coolant temperature exceeds the default setting. **Note:** The high engine temp. shutdown functions only when the coolant level is in the operating range.	Analog input	Post starting aid, running, cooldown	15 sec	5 sec	Coolant temperature at or above 110° C (230° F)	Check for a low engine coolant level. Check seawater pump impeller, strainers, and seacock.
Eng Speed High Shutdwn	High engine speed shutdown occurs if the engine speed exceeds the default setting.	Frequency over AC voltage	Post starting aid, running, cooldown	0 sec	300 ms	Engine speed exceeds 115% of the rated speed	Contact an authorized distributor/dealer for service if problem continues.
Eng Speed Low Shutdwn	Low engine speed shutdown occurs if the engine speed falls below the default setting.	Frequency over AC voltage	Post starting aid, running, cooldown	0 sec	3 sec	Engine speed falls below 85% of the rated speed	Contact an authorized distributor/dealer for service.
Exh Temp High Shutdown	High exhaust temperature shutdown occurs if the engine exhaust temperature exceeds the default setting.	Digital input	Auto, fault, start, ECM start, starting aid, cranking, crank pause, post starting aid, running, cooldown	0 sec	2 sec	Switch closes (shorted-to-ground)	Check the wiring to the sensor. Check for a clogged seawater intake or sea strainer. Check for a damaged seawater pump impeller. Check the exhaust system, see Section 3.5.
Frequency High Shutdwn	Overfrequency shutdown occurs when the governed frequency exceeds the default setting of the system's frequency setpoint.	Alternator output	Post starting aid, running, cooldown	10 sec	5 sec	AC frequency exceeds 110% of the systems frequency	Contact an authorized distributor/dealer for service if problem continues.

Fault Shutdowns							
Code	**Description**	**Sensing Mechanism**	**State(s) Detected**	**Inhibit Time**	**Delay Time**	**Trip Point**	**Check**
Frequency Low Shutdown	Underfrequency shutdown occurs when the governed frequency falls below the default setting of the system's frequency setpoint.	Alternator output	Post starting aid, running, cooldown	10 sec	10 sec	AC frequency below 90% of the systems frequency	Reduce the load and restart the generator set. Contact an authorized distributor/dealer for service if problem continues.
Locked Rotor Shutdwn	Overcrank (locked rotor) shutdown	Frequency over AC voltage	Cranking	0 sec	3 sec	3 sec. Engine speed is below 10 rpm and the oil pressure is below crank oil pressure (69 kPa)	Contact an authorized distributor/dealer for service if problem continues.
Oil Pres Low Shutdwn	Low oil pressure shutdown occurs if a low oil pressure condition exists. **Note:** The low oil pressure shutdown does not protect against low oil level. Check the oil level at the engine.	Analog or digital input	Post starting aid, running, cooldown	1 sec	10 sec	At or below 117 kPa	Check for leaks in the lubrication system. Check the oil level and add oil if the level is low.
Over Crank Shutdwn	Overcrank shutdown occurs after 3 unsuccessful starting attempts.	Fail to start	ECM start, starting aid, cranking, crank pause	0 sec	7 sec on/ 15 sec off	3 crank cycles. Controller goes into the cranking state 3 consecutive times without going into post starting aid	Check the fuel supply and battery. Also check for loose connections. Contact an authorized distributor/dealer for service if problem continues.
RunRelCoil Shutdwn	Overload or perceived overload on the DC circuits provided through the controller. These circuits are 70 (Run), 71 (Crank), & FP/FN (Flash). This is a smart switch within the controller that trips to protect the internal fuse on the DC circuit.	Internal hardware & software	Running	0 sec	0 sec	Relay coil exceeds max. current	Contact an authorized distributor/dealer for service if problem continues.
Sea Pressur Low Shutdwn	Low seawater pressure shutdown occurs after a loss of seawater pressure is detected.	Digital input	Post starting aid, running, cooldown	10 sec	5 sec	Switch closes (shorted-to-ground)	Check for a clogged seawater intake or sea strainer. Check for a damaged seawater pump impeller.

Fault Shutdowns							
Code	**Description**	**Sensing Mechanism**	**State(s) Detected**	**Inhibit Time**	**Delay Time**	**Trip Point**	**Check**
Volts xx-xx High Shutdwn	Overvoltage shutdown occurs if the voltage exceeds the default setting of the voltage regulator setpoint.	Alternator output	Post starting aid, running, cooldown	0 sec	2 sec	xx-xx AC voltage exceeds 120% of the AC system voltage	Contact an authorized distributor/dealer for service if problem continues.
Volts xx-xx Low Shutdwn	Undervoltage shutdown occurs if the voltage falls below the default setting of the voltage regulator setpoint.	Alternator output	Post starting aid, running cooldown	0 sec	10 sec	xx-xx AC voltage below 80% of the AC system voltage	Reduce the load and restart the generator set. Check the F1 fuse. Contact an authorized distributor/dealer for service if problem continues.

Figure 2-9 Advanced Digital Control IId Fault Shutdown

Warnings							
Code	**Description**	**Sensing Mechanism**	**State(s) Detected**	**Inhibit Time**	**Delay Time**	**Trip Point**	**Check**
AC Sens Loss Warning	Loss of AC voltage warning occurs when the controller does not detect the nominal generator set AC output voltage after crank disconnect.	Frequency over AC voltage	Post starting aid, running, cooldown	10 sec	1 sec	AC voltage is below 5% of the trip point for low AC voltage fault/ shutdown	Contact an authorized distributor/dealer for service.
Battery High Warning	High battery voltage warning. The fault condition clears when the battery voltage returns to a voltage within the limits.	Analog input	Auto, fault, start delay, ECM start, starting aid, cranking, crank pause, post starting aid, running, cooldown	0 sec	10 sec	Battery voltage exceeds 125% of the nominal system voltage (12 V)	Check the battery rating and condition.
Battery Low Warning	Low battery voltage warning. The fault condition clears when the battery voltage returns to a voltage within the limits.	Analog input	Auto, fault, start delay, ECM start, starting aid, cranking, crank pause, post starting aid, running, cooldown	0 sec	90 sec	Battery voltage is at or below 100% of the nominal system voltage (12 V)	Check the battery rating and condition. Charge or replace the battery.
Coolnt Temp High Warning	High coolant temperature warning.	Analog	Post starting aid, running, cooldown	15 sec	5 sec	Coolant temperature at or above 105° C (221° F)	Check for a low engine coolant level. Check seawater system for reduced flow. NOTE: Allow the generator set to cool down before checking.
Low Crank Vlt Warning	Low cranking voltage warning.	Analog input	Cranking	0 sec	6 sec	Battery voltage drops below 60% of the nominal system voltage (12 V)	Check the battery rating and condition. Charge or replace the battery.
Oil Pres Low Warning	Low engine oil pressure warning.	Analog	Post starting aid, running, cooldown	1 sec	10 sec	At or below 138 kPa	Check for leaks in the lubrication system. Check the oil level and add oil if the level is low.

Figure 2-10 Advanced Digital Control IId Warnings

2.7.2 Controller Resetting (Following System Fault Shutdown)

Always identify and correct the cause of a fault shutdown before resetting the controller. Use the following procedure to reset the generator set controller after a fault shutdown.

1. Disconnect the generator set from the load. See the safety precautions at the beginning of this manual before proceeding.

2. Identify and correct the cause of the fault shutdown. See the safety precautions at the beginning of this manual before proceeding. Refer to Section 4, Troubleshooting.

3. Use the Advanced Digital Control's pushbutton/rotary selector dial to select the Overview page.

4. When the Overview page appears, press the pushbutton/rotary selector dial to view the active fault. Press the pushbutton/rotary selector dial again and then use the pushbutton/rotary selector dial to CONFIRM CLR FAULT: YES to clear the fault.

5. Push the pushbutton/rotary selector dial.

6. Start the generator set by pressing the generator set start/stop button to START. Test operate the generator set to verify that the cause of the shutdown has been corrected.

7. Shut the generator off by pressing the generator set start/stop to the STOP position.

8. Reconnect the generator set to the load.

2.7.3 Voltage Regulator and Calibration Specifications

The controller has a voltage regulation function that is internal to the processor. This means that no external voltage regulator is necessary. The voltage regulation of the controller uses root mean square (rms) sensing for fast response to changes in indicated and regulated voltages resulting in excellent regulation accuracy.

2.7.4 Voltage Regulator Adjustments

The descriptions of the voltage regulator adjustments and features follow. See Appendix C, Voltage Regulator Definitions and Adjustments, for additional information and to customize adjustments for specific applications.

Voltage Adjustment. The voltage adjustment allows the user to enter the desired generator set output level. This regulated level setting is the average of the three line-to-line voltages in three-phase configurations or L1-to-L2 in single phase configurations.

Submenus display the individual line-to-line voltages. These voltages are for reference only and are relevant in unbalanced load conditions. The voltage adjust setpoint can be changed to accommodate an important phase in an unbalanced system.

Underfrequency Unload Frequency Setpoint. This adjustment affects the voltage droop (volts per Hz) when load is applied and underfrequency occurs. The underfrequency unload setting defines the setpoint where underfrequency starts. Any frequency below the setpoint causes the voltage to drop thus reducing the load allowing the engine speed to recover according to the underfrequency unload slope setting.

Engine speed recovery depends upon characteristics such as engine make, fuel type, load types, and operating conditions. The underfrequency unload setting should match the engine speed recovery characteristics for the application.

Underfrequency Unload Slope. This setting determines how much the voltage drops during an underfrequency condition. Typically, applying a large electrical load causes a dip in engine speed and frequency. The voltage regulator reduces voltage, allowing engine speed recovery. The volts-per-Hz setting determines the amount of voltage drop.

Regulator Gain. Regulator gain refers to the gain of the control system. Generally, the higher the gain the faster the system responds to changes and the lower the gain, the more stable the system.

If the voltage is slow to recover when loads are applied or removed, increase the regulator gain. If the voltage is unstable, decrease the regulator gain.

2.7.5 System Fault Warning Lamp with Digital Displays

The system FAULT lamp blinks green then red indicating a warning fault but does not shut down the generator set.

When the system warning lamp is on and no message displays, rotate the selector dial to view messages. When the system warning continues, it may lead to a fault and cause a system shutdown.

Note: Text shown in *italics* in this section of the manual represents digital display messages.

AC Sensing Loss. The fault lamp illuminates green then red when the controller does not detect the nominal generator set AC output voltage after crank disconnect. The controller displays *AC Sens Loss Warning.*

High Battery Voltage. The fault lamp illuminates green, then red, maybe black when the battery voltage rises above the preset level for more than 10 seconds. The local display shows *Battery High Warning*. Figure 2-11 shows high battery voltage specifications. The high battery voltage feature monitors the battery and battery charging system in the generator set operating and off modes.

Engine Electrical System Voltage	High Battery Voltage Range	High Battery Voltage Default Setting
12	13.2–16.2	15

Figure 2-11 High Battery Voltage Specs

High Coolant Temperature. The fault lamp illuminates green, then red, maybe black when the engine coolant temperature approaches the shutdown range. The high coolant temperature warning does not function during the preset inhibit time delay period after startup. The local display shows *Coolnt Temp High Warning.*

Low Battery Voltage. The fault lamp illuminates green, then red, maybe black when the battery voltage drops below a preset level for more than 90 seconds. The local display shows *Battery Low Warning*. See Figure 2-12 for low battery voltage specifications.

Engine Electrical System Voltage	Low Battery Voltage Range	Low Battery Voltage Default Setting
12	9.6–12.6	12

Figure 2-12 Low Battery Voltage Specs

The low battery voltage feature monitors the battery and battery charging system in the generator set operating and off modes. The controller logic inhibits the low battery voltage warning during the crank cycle.

Low Cranking Voltage. The fault lamp illuminates green, then red when the battery voltage drops below 60% of the nominal voltage (12 VDC) for more than 6 seconds during the crank cycle. The local display shows *Lo Crank Vlt Warning.*

Low Oil Pressure. The fault lamp illuminates green then red when the engine oil pressure approaches the shutdown range. The low oil pressure warning does not function during the first 11 seconds after startup. The local display shows *Oil Press Low Warning*.

2.7.6 System Fault Shutdown Lamp With Digital Displays

The system FAULT lamp flashes red and the unit shuts down to indicate a fault shutdown under the following conditions. See Section 2.7.2, Controller Resetting procedure, for information on resetting a system shutdown.

Note: Text shown in *italics* in this section of the manual represents digital display messages.

AC Sensing Loss. The fault lamp flashes red and the unit shuts down when the controller does not detect the nominal generator set AC output voltage for more than 3 seconds after crank disconnect. The controller displays *AC Sens Loss Low Shutdwn.*

Auxiliary Input (Shutdown). The fault lamp flashes red and the unit shuts down when an auxiliary inputs signals the controller. Use SiteTech™ software to define inputs as shutdowns. The local display shows *Aux Input Shutdwn.*

Engine Over Speed. The fault lamp flashes red and the unit shuts down immediately when the governed frequency on 50 and 60 Hz models exceeds the over speed setting. The local display shows *Eng Speed High Shutdwn*.

Engine Under Speed. The fault lamp flashes red, the alarm horn sounds, and the unit shuts down immediately when the governed frequency on 50 and 60 Hz models drop below the underspeed setting. The local display shows *Eng Speed Low Shutdwn*.

High Coolant Temperature. The fault lamp flashes red and the unit shuts down because of high engine coolant temperature. The high coolant temperature shutdown does not function during the preset inhibit time delay period after startup. The local display shows *Coolnt Temp High Shutdwn*.

Note: The high engine temperature shutdown function and the low seawater pressure shutdown function are independent. A low seawater pressure condition may not activate the high engine temperature switch.

High Exhaust Temperature. The fault lamp flashes red and the unit shuts down because of high exhaust temperature. The local display shows *Exh Temp High Shutdwn*.

Locked Rotor (failed to crank). If none of the speed sensing inputs show engine rotation within the preset time delay of initiating engine cranking, the ignition and crank circuits turn off for the preset period and the cycle repeats. The fault lamp flashes red and the unit shuts down after the second cycle of the preset period of cranking. The local display shows *Locked Rotor Shutdown.*

Low Seawater Pressure. The fault lamp flashes red and the unit shuts down because of low seawater pressure. Shutdown occurs 5 seconds after low seawater pressure is detected. Local display shows *Sea Pressure Low Shutdwn.*

Low Oil Pressure. The fault lamp flashes red and the unit shuts down because of low oil pressure. The shutdown occurs 10 seconds after the low pressure condition is detected. The low oil pressure shutdown does not function during the first 15 seconds after startup. The local display shows *Oil Press Low Shutdwn*.

Overcrank. The fault lamp flashes red and cranking stops when the unit does not start within the defined cranking period. The local display shows *Over Crank Shutdwn*. See Section 2.6.2, Starting the Generator Set and Section 2.7.1, Status Event and Fault Specifications for cyclic crank specifications.

Note: The controller is equipped with an automatic restart function. When speed drops below 25 Hz (750 rpm) while the engine is running, the unit attempts to recrank. The unit then follows the cyclic cranking cycle and, when the engine fails to start, will shut down on an overcrank fault condition.

Overfrequency. The fault lamp flashes red and the unit shuts down when the frequency is above the overfrequency setting. The local display shows *Freq High Shutdwn*. See Figure 2-13.

Overfrequency Setting Range	Time Delay	Overfrequency Default Setting
102%–140% of nominal	10 sec.	110% of nominal

Figure 2-13 Overfrequency Specs

Overvoltage (Each Phase). The fault lamp flashes red and the unit shuts down when the voltage exceeds the overvoltage setting for the preset time delay period. The local display shows *Volts (L1-L2, L2-L3, or L3-L1) High Shutdwn*. See Figure 2-14 for overvoltage specifications.

Note: Overvoltage can damage sensitive equipment in less than one second. Install separate overvoltage protection on online equipment requiring faster than 2-second shutdown.

Inhibit Time	Delay Time	Overvoltage Default Setting
10 sec.	2 sec.	120% of nominal

Figure 2-14 Overvoltage Specs

Run Relay Coil. The fault lamp flashes red and the unit shuts down when the controller smart switch that operates generator set wire number 70 (Run) is overloaded. The local display shows *RunRelCoil Shutdwn*.

Underfrequency. The fault lamp flashes red and the unit shuts down when the frequency drops below the underfrequency setting. The local display shows *Frequency Low Shutdwn*. See Figure 2-15 for underfrequency specifications.

Inhibit Time	Delay Time	Underfrequency Default Setting
10 sec.	5 sec.	90% of nominal

Figure 2-15 Underfrequency Specs

Undervoltage. The fault lamp flashes red and the unit shuts down when the voltage drops below the undervoltage setting for the time delay period. The local display shows *Volts (L1-L2, L2-L3, or L3-L1) Low Shutdwn*. See Figure 2-16 for undervoltage specifications

Inhibit Time	Delay Time	Undervoltage Default Setting
10 sec.	10 sec.	80% of nominal at 10 sec.

Figure 2-16 Undervoltage Specs

2.7.7 Status and Notice Digital Displays

Warnings and shutdown faults appear on the digital display and become part of the event history. Beyond the warnings and shutdowns there are several events which also appear on the digital display. Status is an event that is not an alert but is part of the event history. Notice is an alert that is not part of the event history.

The controller allows a selected number of changes by the user for setting up the controller application which are covered in this section.

Note: Text shown in *italics* in this section of the manual represents digital display messages.

Backup Parameters Loaded. This status message indicates that backup parameter firmware is now loaded on the controller. The local display shows *Backup Pars Status.*

Engine Start Aid Active. This notice message indicates that the start aid is active and will energize an engine equipped preheat or ether system during the crank cycle. The local display shows *Preheat.*

Engine Start Delay Active. This notice message indicates that the delay for engine start is active where the generator set will not start right after the RUN button is pressed. The unit will start cranking after the time delay times out. The local display shows *Preheat.*

Engine Started. This status indicates that the generator set start circuit is closed allowing the engine to crank and run. The local display shows *Engine Start Status.*

Engine Stopped. This status indicates that the generator set start circuit is open causing the engine to shut down. The local display shows *Engine Stop Status.*

Generator Running. This notice indicates that the generator set has started and is running. The local display shows *Gen Running Notice.*

Generator Set Calibration (User Defined). This selectable display is in the GenSet Metering Menu allowing the user to calibrate the controller and generator set. Use the Pushbutton/Rotary Selector Dial to navigate and select this feature.

Changes to this display must be done with the generator set running. The local display shows *Enter calib? No or Yes.* Select No to make no change. Select Yes to calibrate the following values:

- Volts L1–L2: x.x V
- Volts L2–L3: x.x V
- Volts L3–L1: x.x V
- Volts L1–N: x.x V
- Volts L2–N: x.x V
- Volts L3–N: x.x V

The user can individually calibrate the values above or reset all of them. The local display *Reset all calib? No or Yes*. Select No to make no changes and exit GenSet Calibration. Select Yes to reset all of the values.

When calibrating voltage, the metered value and the number being entered as the calibrated value must be within 10% of the system operating voltage.

Measurement Units (User Defined). This selectable display is in the GenSet System Menu allowing the user to choose between Metric and English displays. Use the Pushbutton/Rotary Selector Dial to navigate and select this feature. Changes to this display can be done with the generator set running or stopped. The local display shows *Meas Units: Metric* or *Meas Units: English.*

Remote Start. This status indicates that the generator set start circuit was closed from a remote location allowing the engine to crank and run. The remote location is typically a set of contacts on a transfer switch or remote start switch. The local display shows *Remote Start Status.*

System Ready. This status indicates that the generator set is in the AUTO mode and available to start if the start circuit is closed. The local display shows *System Ready.*

System Timer Failed. This notice indicates that the controller timer logic has failed to time out a designated function. The local display shows *Timer Error Notice.*

Voltage Regulator Adjustment (User Defined). This feature is in the Voltage Regulator Menu allowing the user to fine adjust the output voltage. Use the Pushbutton/Rotary Selector Dial to navigate and select this feature. Changes to this display must be done with the generator set running. The local display shows *Enter volt reg? No or Yes.* Select No to exit the voltage regulator menu. Select Yes to change the local display *VR Volt Adj: xxx.x V.*

2.8 Menu Displays

Use the Menu Summary List section after reading and understanding the features of the pushbutton/rotary selector dial. See Section 2.6.5, Digital Display.

The Menu Summary List provides a quick reference to the digital display data. Some digital display data may not be identical to your display due to generator set application differences. The closed bullet items represent main level data and the open bullet items are sub-level data. The Menu Summary List indicates items that are user selectable. Use SiteTech™ software for changing programmable information.

Section 2.10, Reviewing the Menu Displays, provides a digital display menu overview and explains the navigation using the pushbutton/rotary selector dial.

Menu Summary List (Legend: ● First level submenu, ○ second level submenu)

Overview Menu

Available as scrolling or fixed display text

- Active Shutdowns (if present)
- Active Warnings (if present)
- Genset State
- Average Volts Line-to-Line
- Frequency
- Coolant Temperature
- Oil Pressure
- Battery DC Voltage
- Engine Run Time
- Next Maintenance
- Software Version

Engine Metering Menu

- Engine Speed (Tachometer)
- Oil Pressure
- Coolant Temperature
- Battery DC Voltage

Generator Metering Menu

- Volts, L1-L2 *
- Volts, L2-L3 *
- Volts, L3-L1 *
- Volts, L1-N *
- Volts, L2-N *
- Volts, L3-N *
- Frequency
- Reset Calibration (User can reset individual volt values or reset all values)

GenSet Information Menu

- Generator Set Model No.
- Generator Set Serial No.
- Controller Serial No.

GenSet Run Time Menu

- Engine Run Time
- Engine Starts
- Next Maintenance

GenSet System Menu

- System Frequency
- Battery DC Voltage
- CAN A (J1939, SmartCraft, NMEA 2000) *
- Measurement System (Metric or English) *
- Contrast (display) *

Voltage Regulator Menu

- Voltage Regulator Voltage Adjust *
- Volt/Hz Adjust *
- Gain Adjust *
- Stability Adjust *
- Reset Voltage Regulator Settings *
  - ○ Reset Voltage Regulator?

Event Log Menu

- See Section 2.6.6 for a list of items that can appear in Event Log

Prime Menu

- See Section 2.10.10

Volt Select Menu

- Volt Select: *
  - ○ 120/240 V 1 Ph
  - ○ 120/208 V 3 Ph
  - ○ 139/240 V 3 Ph
  - ○ 277/480 V 3 Ph
  - ○ 120/240 V 3 Ph
  - ○ 115/230 V 1 Ph
  - ○ 120 V 1 Ph
  - ○ 230 V 1 Ph
  - ○ 240 V 1 Ph
  - ○ 110/190 V 3 Ph
  - ○ 127/220 V 3 Ph
  - ○ 115/230 V 3 Ph
  - ○ 230/400 V 3 Ph
  - ○ 240/416 V 3 Ph

USB Menu

- See Section 2.10.12 for USB flowchart information

* User-Defined (Changeable) Menu Displays. **NOTE:** Some changes require activating the calibration or adjustment mode. Some displays may only appear when in the calibration or adjustment mode. Refer to Section 2.10 Reviewing Menu Displays to activate the calibration or adjustment mode.

2.9 Monitoring and Programming Setup

The user programmer can access the controller data with the controller digital display or a personal computer (PC) with optional SiteTech™ software to monitor and/or program. Access the controller system with a PC using a USB cable with a standard type A and a standard type B USB plug. Refer to the Introduction, List of Related Materials for related software literature.

While this manual focuses on data access through the controller pushbutton/rotary selector dial and display, some data entries require input using a PC for initial setup. The PC entries typically include alpha characters such as digital input descriptions.

2.9.1 PC Communications

Communicate between a PC and the generator set controller logic using USB communication protocol. The PC connections require optional SiteTech™ software. Contact your authorized distributor/dealer for assistance.

Local Single Connection

A PC connects to the USB port of the generator set controller using a standard type-B USB connector. See Figure 2-17 and Section 2.10.12.

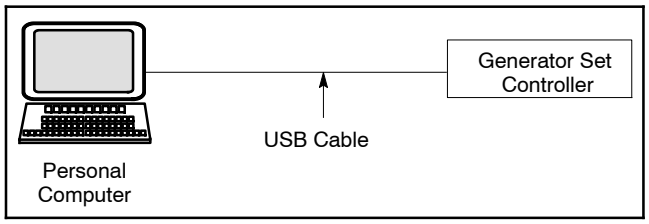

Figure 2-17 Local Single Connection

2.10 Reviewing Menu Displays

Use this section to review a summary of the generator set controller data. See Figure 2-18 for which menus provide data monitoring, data adjustments, or SiteTech™ software to make data adjustments.

Use the pushbutton/rotary selector dial to navigate to the respective menus.

Menus displaying the # symbol represent one of the following data types:

- System-calculated data
- System-measured data
- User-entered data

Note: The examples given on the following pages represent digital displays with the Measurement Units set to English.

2.10.1 Error Messages

Certain entries or attempted entries may cause the controller to display an error message.

Cannot Calibrate appears when attempting to calibrate the voltage values in the Generator Metering menu with the unit stopped. The unit must be running in order to make adjustments.

Cannot Edit When Stopped appears in the Voltage Regulator menu when attempting to change the VR Volt Adj value when the unit is not running.

Menu Name	Controller Viewable	Controller Adjustable	SiteTech Adjustable
Overview	X		
Engine Metering	X		
Generator Metering	X	X	
GenSet Information	X		
GenSet Run Time	X		
GenSet System	X	X	X
Voltage Regulation	X	X	X
Event Log	X		
Prime	X	X	
Volt Select	X	X	X*

* In SiteTech™, the voltage and phase get set individually.

Figure 2-18 Menu Displays for Viewing and Adjusting

2.10.2 Overview

Displays basic and commonly sought after information about the generator set. This information scrolls automatically after about 5 minutes of no user input (pushbutton/rotary selector dial or button activity).

To change from auto scrolling to fixed display, press the rotary dial and the main menu will appear. Press the rotary dial again to select the first menu item Overview. Turn the rotary dial to select the desired fixed view.

Overview (Auto Scrolling Display)

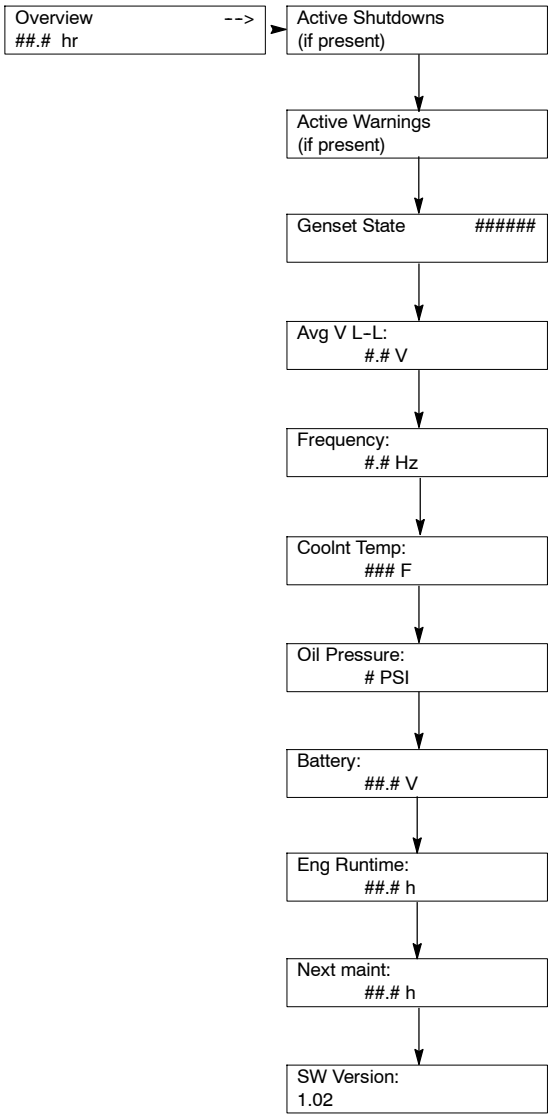

Overview (Fixed Display)

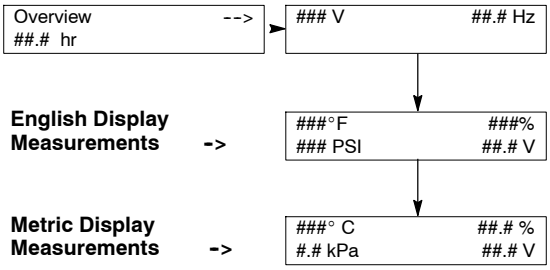

2.10.3 Engine Metering

Displays engine operating data as measured by the engine and other sensors.

Engine Metering

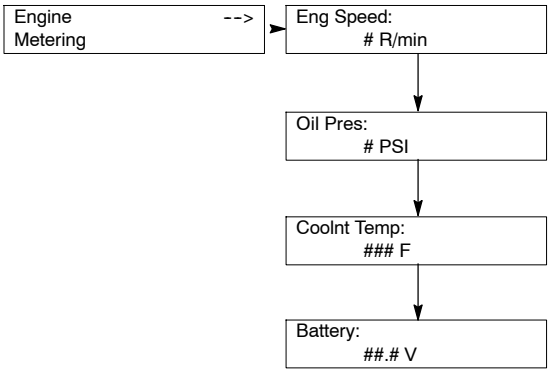

2.10.4 Generator Metering (and Calibration)

Displays generator output data including line-to-line and line-to-neutral voltages and frequency. The menu displays three-phase voltage readings when applicable.

All menu displays apply to both single-phase or three-phase voltages on the menu overview. The phase designation does not appear in the controller menu displays. Some displays will show 0 values when single-phase connections are shown.

Display also provides access to the calibration factors for metering (volts). Changing the system voltage or replacing the main logic control circuit board requires calibration adjustment. Connect a meter with a minimum accuracy of 1% to the generator set output leads to calibrate the voltage-sensing logic.

To enable calibration, start the generator set and select the *Volts L1-L2* display. Then push and hold the pushbutton/rotary selector dial until the *Calibration Enabled* popup appears. Calibration of each display is now available. The display will show the following values for three-phase generator sets. Single-phase generator sets will only display items marked (*).

- Volts L1-L2 *
- Volts L2-L3
- Volts L3-L1
- Volts L1-N
- Volts L2-N
- Volts L3-N

The user can change individual values or can select *Reset Calib?-Yes* to reset all voltage values. The *Reset Calib?* display will only show if calibration is enabled.

When calibrating voltage, the metered value and the number being entered as the calibrated value must be within 10% of the system operating voltage.

To disable calibration, Rotate the pushbutton/rotary selector dial until the *<-Return* popup appears. Momentarily press the pushbutton/rotary selector dial. Stop the generator set if not already done.

Generator Metering

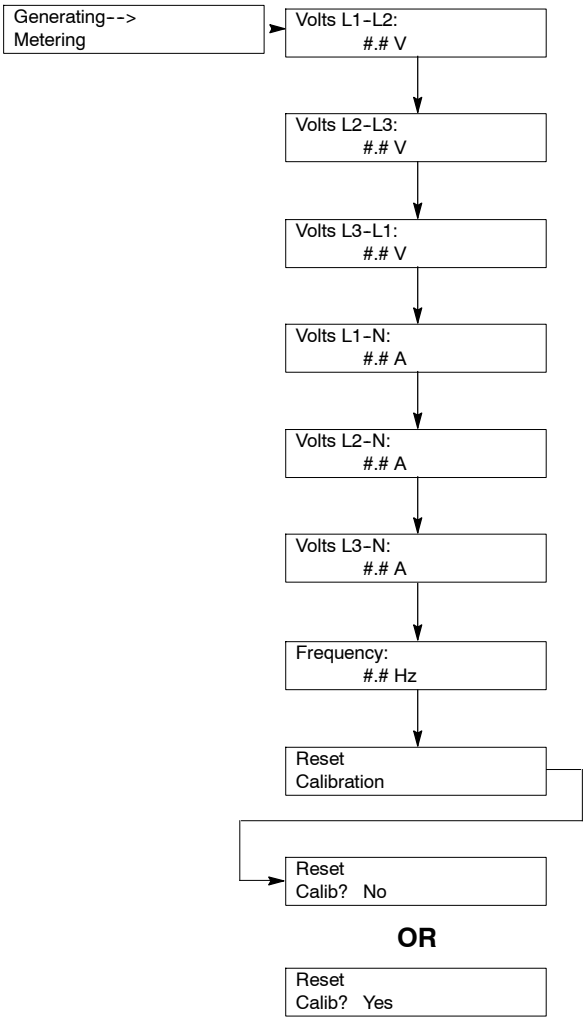

2.10.5 GenSet Information

Displays generator set and controller information. Displayed data is factory entered.

GenSet Information

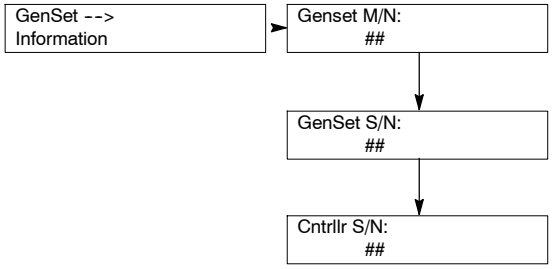

2.10.6 GenSet Run Time

Displays the generator set's operating record including total run time loaded and unloaded, number of starts, and total energy kW hours.

GenSet Run Time

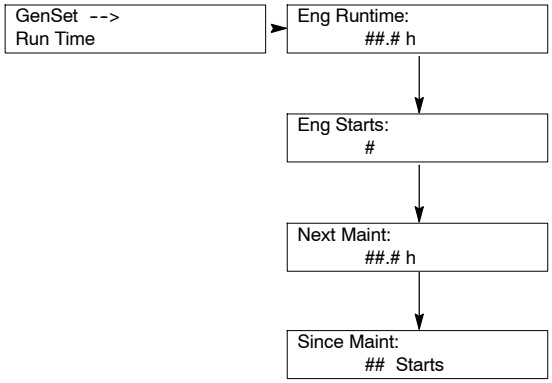

2.10.7 GenSet System

Display shows the generator set system data. Use the values entered in this menu to help determine shutdown values and time delays.

The programming user defines the data shown in the GenSet System menu. It is NOT data measured by the controller and associated sensing devices. The programming user defines these values for purposes of calibrating the control.

Some alternators are designed to operate at limited voltage, frequency, or phase connections and as a result some settings may have limited parameters.

Display for Measurement System is user selectable as English or Metric.

Contrast display is user adjustable to help improve digital display visibility in dimly lit rooms or in direct sunlight.

Note: The contrast feature is a controller hardware change and may not be available on older units even if the firmware is updated.

GenSet System

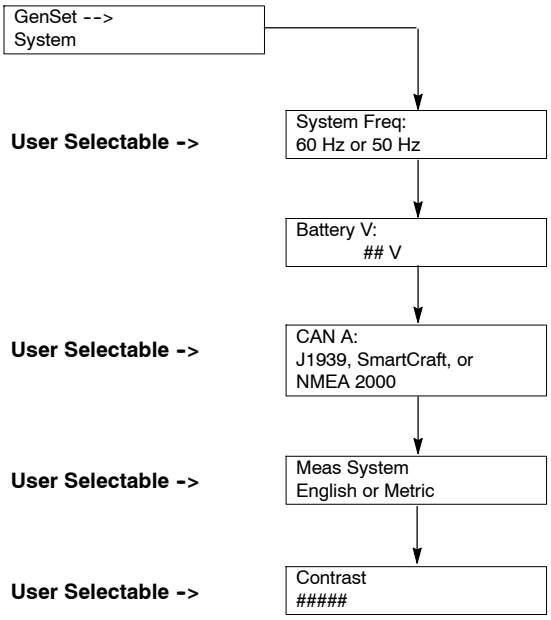

Note: After changing the CAN A communication setting, power off and then power on the controller.

2.10.8 Voltage Regulator

Displays the voltage regulator adjustment, volt/Hz, gain, and stability adjustment values.

The voltage regulator value is reviewable at all times and provides the ability to fine adjust voltage. Changing the system voltage or replacing the circuit board typically requires a voltage adjustment.

To enable calibration, start the generator set and select the *VR Volt Adj, Volt/Hz, Gain, or Stability* display. Then push and hold the pushbutton/rotary selector dial until the *Editing Enabled* popup appears. Editing of the voltage adjustment is now available.

The user can change the individual value or can select *Reset VR?-Yes* to reset to the default value. The *Reset VR Settings* display will only show if editing is enabled.

To disable calibration, Rotate the pushbutton/rotary selector dial until the *<-Return* popup appears. Momentarily press the pushbutton/rotary selector dial. Stop the generator set if not already done.

Voltage Regulator

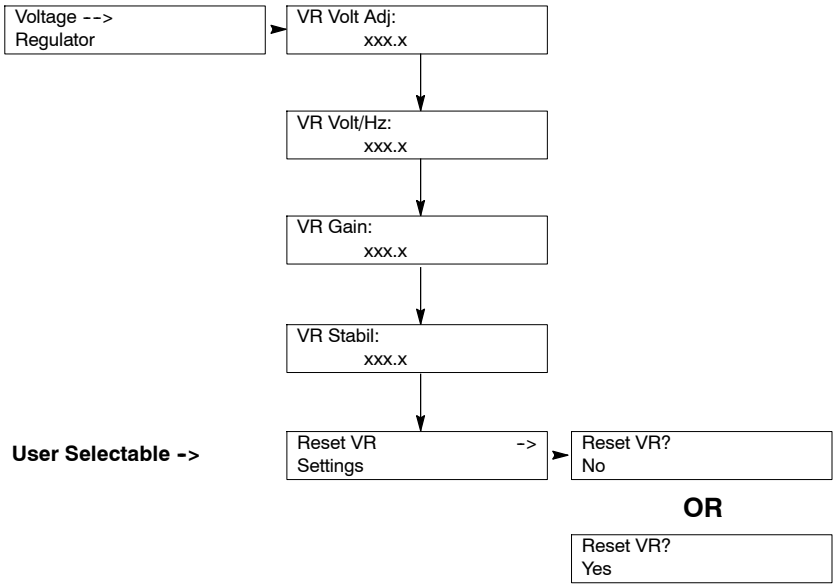

2.10.9 Event Log

Displays up to 1000 stored status, warning, and shutdown events. After the first 1000 events, each additional new event replaces the oldest event. See 2.6.6 Controller Fault Diagnostics for a list of possible events.

Event Log

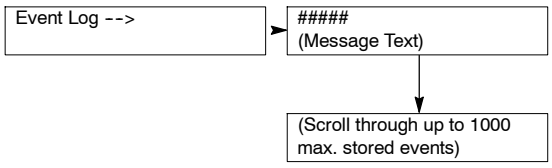

2.10.10 Prime Menu

This menu, if confirmed, allows the user to initiate the electric fuel pump to prime the fuel system.

Prime the Fuel System

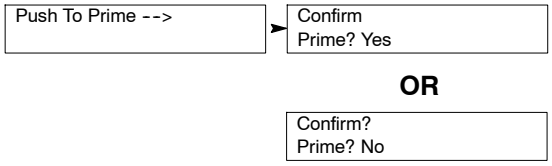

2.10.11 Volt Select

This menu allows the user to readily change controller voltage settings.

Note: The generator set output leads require voltage reconnection. See the installation manual for voltage reconnection information.

With the generator set stopped, go to the Volt Select menu. Then push and hold the pushbutton/rotary selector dial until the voltage selection starts to flash. Volt selection is now available. Scroll to the desired voltage and momentarily press the pushbutton/rotary selector dial to confirm the voltage selection.

Volt Select

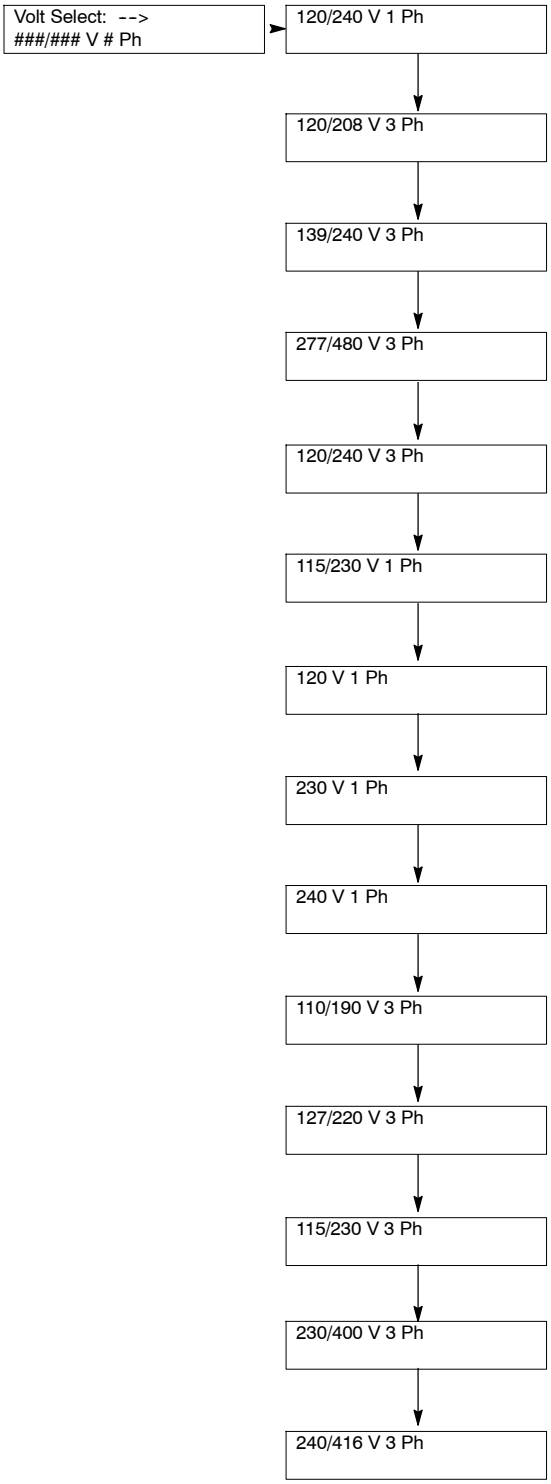

2.10.12 USB Flowchart

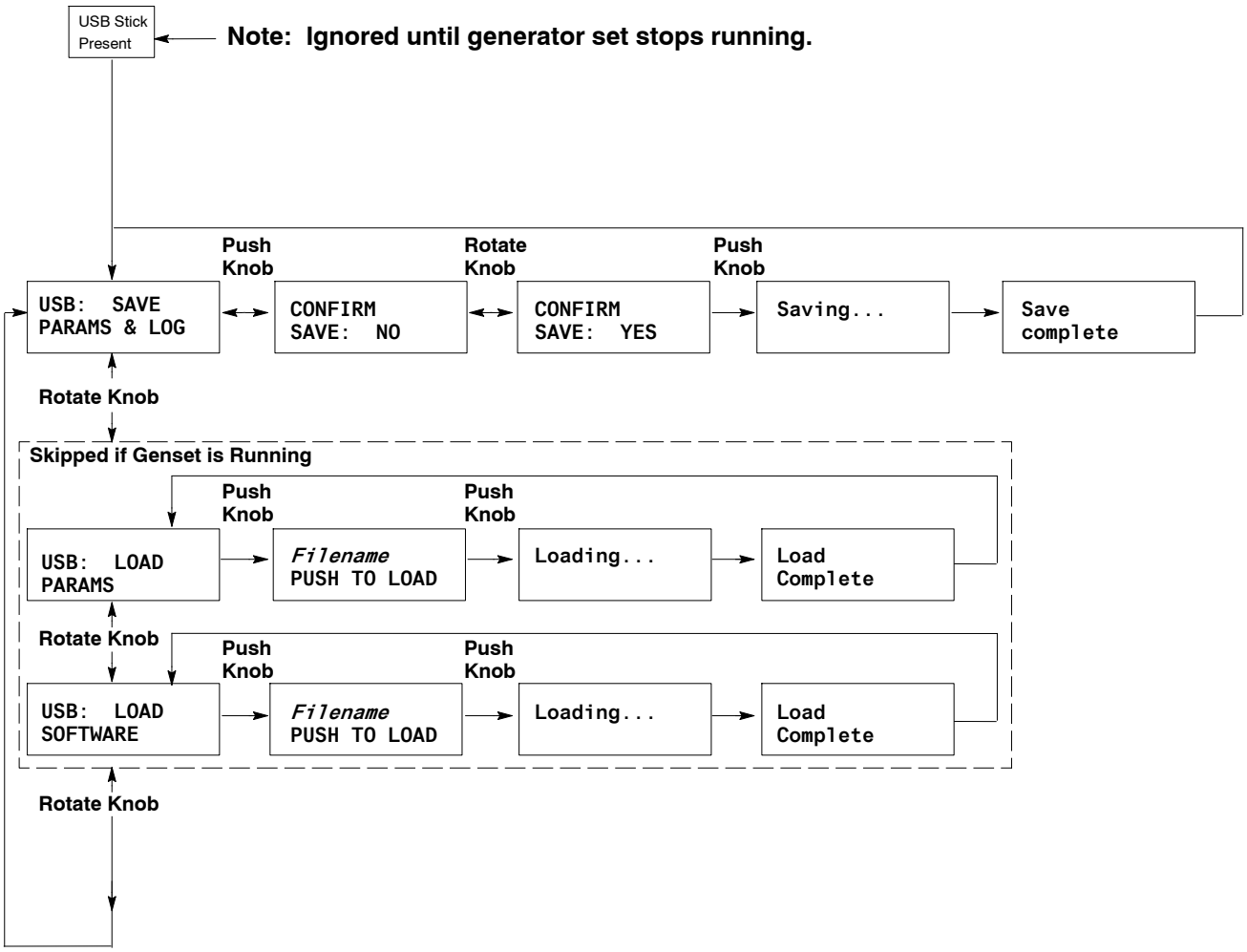

Note: Before inserting a mass-storage device (USB host connector), power off and then power on the controller.

See Figure 2-19 for tested/approved manufacturer's USB flash drive types that work with the ADC IId controller.

CustomUSB® (Kohler® Power Systems Part Number KW-A202)	2-GB "spin" full size
Imation®	4-GB full size
Lexar®	4-GB full size
PNY®	4-GB full size and micro
Verbatim®	4-GB full size and micro

Figure 2-19 ADC IId USB Identification

Notes

3.1 General Maintenance

⚠ WARNING

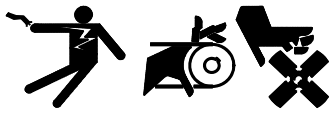

Accidental starting.
Can cause severe injury or death.

Disconnect the battery cables before working on the generator set. Remove the negative (–) lead first when disconnecting the battery. Reconnect the negative (–) lead last when reconnecting the battery.

Disabling the generator set. Accidental starting can cause severe injury or death. Before working on the generator set or equipment connected to the set, disable the generator set as follows: (1) Move the generator set master switch to the OFF position. (2) Disconnect the power to the battery charger. (3) Remove the battery cables, negative (–) lead first. Reconnect the negative (–) lead last when reconnecting the battery. Follow these precautions to prevent starting of the generator set by an automatic transfer switch, remote start/stop switch, or engine start command from a remote computer.

⚠ WARNING

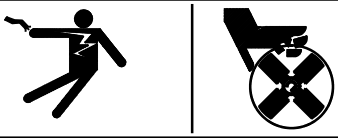

Hazardous voltage. Moving parts.
Can cause severe injury or death.

Operate the generator set only when all guards and electrical enclosures are in place.

Servicing the generator set when it is operating. Exposed moving parts can cause severe injury or death. Keep hands, feet, hair, clothing, and test leads away from the belts and pulleys when the generator set is running. Replace guards, screens, and covers before operating the generator set.

NOTICE

Saltwater damage. Saltwater quickly deteriorates metals. Wipe up saltwater on and around the generator set and remove salt deposits from metal surfaces.

NOTICE

The engine and generator set may use both American Standard and metric hardware. Use the correct size tools to prevent rounding of the bolt heads and nuts.

See the Safety Precautions and Instructions at the beginning of this manual before attempting to service, repair, or operate the generator set. Have an authorized distributor/dealer perform generator set service.

Engine Service. Perform generator set engine service at the intervals specified by the engine operation manual.

Generator Set Service. Perform generator set service at the intervals specified by the generator set operation manual.

If the generator set operates under dusty or dirty conditions, use *dry* compressed air to blow dust out of the alternator. With the generator set running, direct the stream of air in through the cooling slots at the alternator end.

Routine Maintenance. Refer to the following generator set service schedule, the engine service schedule, and the runtime hours shown on the ADC-IId to determine when to schedule routine maintenance. Service more frequently generator sets that are subject to extreme weather or dusty or dirty conditions.

Service Log. Use the Operating Hour Service Log located in the back of this manual to document performed services.

Service Schedule. Perform maintenance on each item in the service schedule at the designated intervals for the life of the generator set. For example, an item requiring service every 100 hours or 3 months also requires service after 200 hours or 6 months, 300 hours or 9 months, and so on.

3.2 Service Schedule—6-11EKOD/EKOZD & 5-9EFKOD/EFKOZD Models

Perform Service at Intervals Indicated (X)	Reference Section	Daily	Every 50 Hrs. or 1 Month	Every 250 Hrs. or 3 Months	Every 500 Hrs. or 6 Months	Every 1000 Hrs. or Yearly
FUEL SYSTEM						
Check the fuel level and fill as necessary	3.4	X (Before operation)				
Check for any unusual noise †		X (During operation)				
Remove the sediment from the fuel tank and drain the fuel tank †§				X		
Bleed the fuel system (if encountering hard starting)	3.4.3		X			
Replace the fuel filter *	3.4.2			X		
Fuel/water separator draining *†			X			
Fuel/water separator cleaning *†					X	
Inspect, clean, and test the fuel injectors *†‡	Eng. S/M					X
Inspect the fuel injection nozzle pressure *†‡	Eng. S/M					X
LUBRICATION SYSTEM						
Check the crankcase oil level and add oil as necessary	3.3.2	X (Before operation)				
Replace the oil in the crankcase *	3.3.3		X (Break-in period)	X		
Replace the lube oil filter element *	3.3.3		X (Break-in period)	X		
COOLING SYSTEM						
Check the coolant level and fill as necessary *	3.6.2	X (Before operation)				
Check the seawater outlet and clean as necessary	3.5	X				
Check/adjust the seawater pump belt tension *	3.7.1		X (Break-in period)	X		
Check the function of the siphon break, if equipped	3.6.6			X		
Check/replace the seawater pump impeller *†	3.6.5			X (Check)		X (Replace)
Replace the coolant *†	3.6.3				X	
Check/replace the heat exchanger anticorrosion zinc anode, if equipped *†	3.6.7			X (Check)		X (Replace)
Clean the heat exchanger tube *†	Gen. S/M				X	
Check/replace the coolant hoses *†				X (Check)		X (Replace)

* Requires removal of the sound shield door, if installed

† Consult your local distributor/dealer for service

‡ Read the WARNING found at the beginning of the manual regarding moving parts

§ Consult the operating instructions supplied with the craft

Service Schedule—6-11EKOD/EKOZD & 5-9EFKOD/EFKOZD Models, continued

Perform Service at Intervals Indicated (X)	Reference Section	Daily	Every 50 Hrs. or 1 Month	Every 250 Hrs. or 3 Months	Every 500 Hrs. or 6 Months	Every 1000 Hrs. or Yearly
INTAKE/EXHAUST SYSTEM						
Inspect the exhaust system components *†	3.5	X (Before operation)				
Check the exhaust gas condition. If the exhaust is blue or black, contact your local distributor/dealer	3.5	X (During operation)				
Clean the exhaust/water mixing elbow *†	3.5				X	
Inspect the crankcase breather system *†	Eng. S/M					X (1500 hrs.)
Check the breather pipe for obstructions *†					X	
Inspect the complete exhaust system *†	2.2					X
ELECTRICAL SYSTEM						
Keep the battery charged and in good condition §	3.8	X (Before operation)				
Check and tighten the electrical connections *			X			
Clean the battery cables †						X
Check the starter motor †						(5000 hrs.)
ENGINE AND MOUNTING						
Check for water, fuel, coolant, and oil leakage *†‡		X (After operation)				
Retighten any loose nuts and bolts *		X (Before operation)				
Check the mounting bolts/vibromounts and tighten if necessary *					X	
Adjust the intake/exhaust valve clearance *†	Eng. S/M				X	
Check the compartment condition (fuel, oil, or water leaks)		X (Before operation)				
Replace the timing belt *†	Eng. S/M					X (4000 hrs.)
Partial engine overhaul *†	Eng. S/M					X (5000 hrs.)
Total engine overhaul *†	Eng. S/M					X (10000 hrs.)
REMOTE START PANEL						
Check the remote start panel operation, if equipped			X (Break-in period)			X
GENERATOR						
Test run the generator set			X (Weekly)			
Blow dust out of the generator *†	3.1					X
6EKOD/5EFKOD Models: Clean the slip rings and inspect the brushes *†	Gen. S/M					X

* Requires removal of the sound shield door, if installed

† Consult your local distributor/dealer for service

‡ Read the WARNING found at the beginning of the manual regarding moving parts

§ Consult the battery manufacturer's instructions

3.3 Lubrication System

See the Scheduled Maintenance section for oil change and oil filter replacement intervals. See Section 1 for the oil drain, oil check, oil fill, and oil filter locations.

x:sm:001:002:

3.3.1 Oil Specifications

Use oil that meets the American Petroleum Institute (API) classification of CD or CF. Using an unsuitable oil or neglecting an oil change may result in damage and a shorter engine life. Figure 3-1 shows the recommended Society of Automotive Engineers (SAE) viscosity designation for given operating temperature ranges.

Note: Failure to observe the oil specifications may cause inadequate lubrication/oil pressure and cold-starting difficulties.

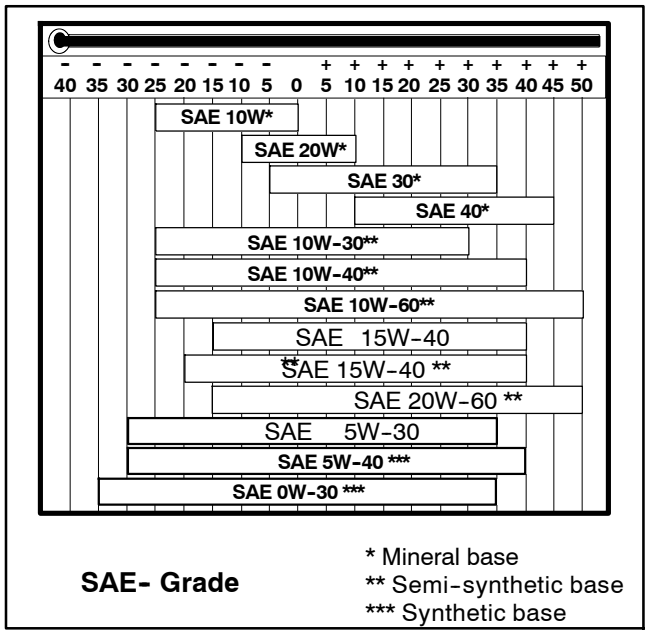

Figure 3-1 Engine Oil Selection

3.3.2 Oil Check

Check the oil level in the crankcase daily or before each startup to ensure that the level is in the safe range. To check the oil level, remove the dipstick and wipe the end clean, reinsert as far as possible, and remove. Maintain the oil level between the Min and Max marks on the dipstick, as shown in Figure 3-2. See Section 1 for dipstick location.

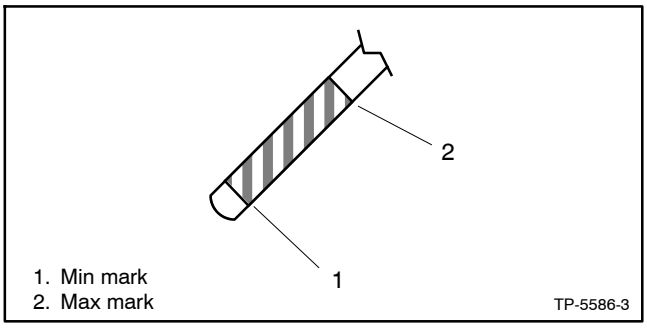

Figure 3-2 Oil Level Check Marks

Note: Do not operate the set if the oil level is below the Min mark or above the Max mark.

3.3.3 Oil Change

Change the oil more frequently if the generator operates under dirty, dusty conditions. See Figure 3-3 for oil capacities.

Model	L (Qts.)
6EKOD and 5EFKOD	2.5 (2.6)
9EKOZD and 7EFKOZD	2.5 (2.6)
11EKOZD and 9EFKOZD (1 Phase)	3.4 (3.6)
11EKOZD and 9EFKOZD (3 Phase)	3.4 (3.6)

Figure 3-3 Oil Capacities

Oil Change Procedure

Whenever possible, drain the oil while it is still warm.

1. **Drain the oil.**

   a. Place the generator set master switch in the OFF position.

   b. Disconnect the power to the battery charger, if equipped.

   c. Disconnect the generator set engine starting battery, negative (–) lead first.

   d. Remove the oil drain hose from its retaining clip. Remove the cap from the oil drain hose and lower the hose into an oil collection container.

   Electric Oil Drain/Oil Fill Pump Procedure: Connect the pump to the end of the oil drain hose. Place the outlet of the pump into an oil collection container. Remove the oil fill cap(s).

   e. Open the oil drain valve on the engine.

   f. Allow time for the engine oil to drain completely.

   Electric Oil Drain/Oil Fill Pump Procedure: Activate the pump until all of the oil is removed. Go to step 2.

   g. Close the oil drain valve.

   h. Replace the cap on the oil drain hose. Replace the oil drain hose in its retaining clip.

2. **Replace the oil filter.**

   a. Remove the oil filter by rotating it counterclockwise with an oil filter wrench.

   b. Apply a light coat of clean oil to the rubber seal of the new oil filter.

   c. Install the new oil filter following the instructions provided with the filter.

   Note: Dispose of all waste materials (engine oil, fuel, filter, etc.) in an environmentally safe manner.

3. **Fill with oil.** Add new oil of the weight, grade, and quantity specified in Section 3.3.

   Electric Oil Drain/Oil Fill Pump Procedure: Disconnect the pump. Close the oil drain valve. Replace the cap on the oil drain hose.

4. **Check for leaks.**

   a. Check that the generator set master switch is in the OFF position.

   b. Reconnect the generator set engine starting battery, negative (–) lead last.

   c. Reconnect the power to the battery charger, if equipped.

   d. Start the generator set and check for leaks around the oil filter.

   e. Stop the generator set and tighten the oil filter to stop any leaks.

x:sm:001:003:

3.4 Fuel System

3.4.1 Fuel Specifications

Use a clean, good quality diesel fuel oil with a cetane number of 51 or greater. Clean fuel prevents the diesel fuel injectors and pumps from clogging.

Diesel Fuel Specifications	
Cetane number	minimum 51
Viscosity	2.0/4.5 centistokes at 40°C
Density	0.835/0.855 kg/litre
Distillation	85% at 350°
Sulphur	maximum 0.05% of the weight

Diesel Fuel Recommendations	
Fuel with low sulphur content *	API CF4, CG4
Fuel with high sulphur content	API CF, CD, CE

* The countries in which diesel normally has a low sulphur content are Europe, North America, and Australia.

Note: Never store diesel fuel in galvanized containers; diesel fuel and the galvanized coating react chemically to produce flaking that quickly clogs filters or causes fuel pump or injector failure.

Note: Avoid storing fuel for more than one month. Take special precautions to keep all dirt, water, and other contaminants out of fuel to prevent the growth of microbes. Microbes form slime that clogs the fuel filter and lines.

Note: Do not run the generator set out of fuel because the fuel lines will draw in air and necessitate bleeding the fuel system before restarting the unit.

3.4.2 Fuel Filter

The quality and condition of the fuel largely determine the filter's useful life. Replace the fuel filter element as listed in the service schedule. Section 1 shows the typical location of a fuel filter. Use the applicable procedure below to replace the fuel filter.

Fuel Filter Cleaning/Replacement Procedure

1. Close the fuel supply valve.
2. Loosen the fuel filter by turning it counterclockwise. Remove the fuel filter and use rags to clean up spilled fuel oil. Dispose of the fuel filter in an approved manner.
3. Clean the contact surface of the fuel oil filter adapter.
4. Lightly lubricate the gasket surface of the new fuel filter with fresh fuel oil. Thread the filter on the adapter until the gasket makes contact; hand-tighten the filter an additional one-half turn. Wash hands after any contact with fuel oil.
5. Open the fuel supply valve.
6. Bleed the system. See Section 3.4.3, Fuel System Bleed.

3.4.3 Fuel System Bleed

Bleed air from the fuel system in order to reduce rough running or vapor lock. Trapped air in the fuel system can cause difficult starting and erratic engine operation.

Prime the fuel system under the following conditions:

- Before starting the engine for the first time.
- After running out of fuel and adding fuel to the tank.
- After fuel system maintenance such as changing the fuel filter, draining the fuel/water separator, or replacing a fuel system component.

Fuel System Bleed Procedure (Preferred)

Note: To prevent damage to the starter motor, do not crank the engine to prime the fuel system. Use the following procedure.

1. Push the power button on the Advanced Digital Control IId to the ON position.
2. When the run time hours appear on the LCD digital display, rotate the pushbutton/rotary selector dial until "PUSH TO PRIME" appears on the LCD digital display.
3. Push the pushbutton/rotary selector dial.
4. Rotate the pushbutton/rotary selector dial to "CONFIRM PRIME: Yes".
5. Push the pushbutton/rotary selector dial to begin the fuel priming procedure. A 30 second priming sequence begins automatically. If necessary, push the control knob to stop the priming procedure before the 30 seconds are up.

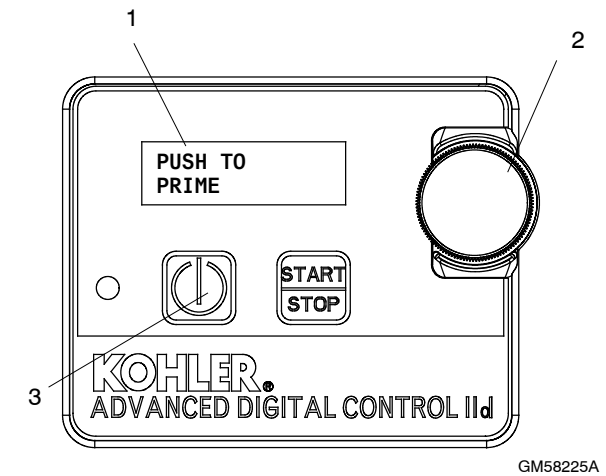

1. LCD digital display
2. Pushbutton/rotary selector dial
3. Power button

Figure 3-4 Advanced Digital Control II

Typically, running the Prime function on the ADC IId is all that is required. If rough operation continues, use the following procedure to open the air bleed valve on the fuel filter.

Note: Connect the battery during the priming procedure to allow engine cranking.

Note: If the ADC IId indicates an overcrank fault during this procedure, disconnect the negative wire from the fuel solenoid (allowing the fuel injection pump to fill with fuel) and repeat this procedure after allowing the starter motor to cool down.

Note: Have a rag handy during this procedure. Wipe up any spilled diesel fuel. Wash hands after any contact with fuel. Dispose of fuel in an environmentally safe manner.

Fuel System Bleed Procedure

1. Loosen the fuel filter's air vent screw. See Figure 3-5.
2. Initiate the auto/start sequence until fuel, free of air bubbles, flows from the vent screw at the fuel filter.
3. Tighten the fuel filter's air vent screw.

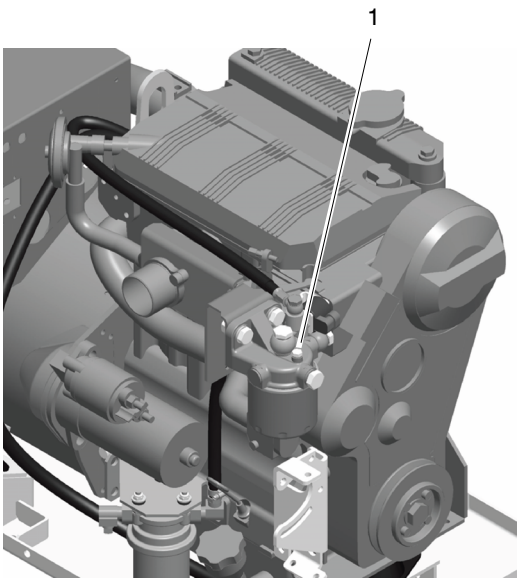

1. Fuel filter's air vent screw location

Figure 3-5 Fuel Filter's Air Vent Screw

3.5 Exhaust System

⚠ WARNING

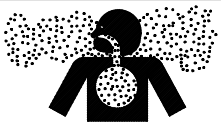

Carbon monoxide.
Can cause severe nausea, fainting, or death.

The exhaust system must be leakproof and routinely inspected.

Inspecting the exhaust system. Carbon monoxide can cause severe nausea, fainting, or death. For the safety of the craft's occupants, install a carbon monoxide detector. Never operate the generator set without a functioning carbon monoxide detector. Inspect the detector before each generator set use.

At the interval specified in the service schedule, inspect the exhaust system components (exhaust manifold, mixing elbow, exhaust hose, hose clamps, silencer, and outlet flapper) for cracks, leaks, and corrosion. See Section 1 for the exhaust outlet location.

Ensure that the carbon monoxide detector(s) is (1) in the craft, (2) functional, and (3) energized whenever the generator set operates.

For your safety: Never operate the generator set without a functioning carbon monoxide detector(s) for your safety and the safety of others on your vessel.

Exhaust System Inspection Points

Check for exhaust leaks and blockages. Check the silencer and piping condition and check for tight exhaust system connections.

- Check the hoses for softness, cracks, leaks, or dents. Replace the hoses as needed.
- Check for corroded or broken metal parts and replace them as needed.
- Check for loose, corroded, or missing clamps. Tighten or replace the hose clamps and/or hangers as needed.
- Check that the exhaust outlet is unobstructed.
- Visually inspect the exhaust system for exhaust leaks *(blowby)*. Check for carbon or soot residue on exhaust components. Carbon and soot residue indicates an exhaust leak. Seal leaks as needed.

3.6 Cooling System

3.6.1 Closed Heat Exchanger

In a closed cooling system, the seawater circulates through separate chambers within the heat exchanger or manifold to cool the engine coolant. The seawater then mixes with the engine exhaust and ejects out of the exhaust outlet. See Figure 3-6 for coolant capacities (include coolant recovery tank capacity of 0.24 L (8 oz.).

Model	L (Qts.)
6EKOD and 5EFKOD	3.0 (3.2)
9EKOZD and 7EFKOZD	3.0 (3.2)
11EKOZD and 9EFKOZD (1 Phase)	4.3 (4.5)
11EKOZD and 9EFKOZD (3 Phase)	4.3 (4.5)

Figure 3-6 Engine Coolant Capacities

3.6.2 Checking and Filling Coolant

⚠ WARNING

Hot coolant and steam.
Can cause severe injury or death.

Before removing the pressure cap, stop the generator set and allow it to cool. Then loosen the pressure cap to relieve pressure.

Allow the engine to cool. Release pressure from the cooling system before removing the pressure cap. To release pressure, cover the pressure cap with a thick cloth and then slowly turn the cap counterclockwise to the first stop. Remove the cap after pressure has been completely released and the engine has cooled. Check the coolant level at the tank if the generator set has a coolant recovery tank.

NOTICE

Saltwater damage. Saltwater quickly deteriorates metals. Wipe up saltwater on and around the generator set and remove salt deposits from metal surfaces.

Maintain the coolant level in the coolant recovery tank at approximately 1/4 full. Before filling the cooling system, close all petcocks and tighten all hose clamps. Use a solution of 50% ethylene glycol and 50% clean, softened water to inhibit rust/corrosion and prevent freezing. Add additional coolant solution, as necessary, to the coolant recovery tank. Periodically check the coolant level on closed systems by removing the pressure cap. Do not rely solely on the level in the coolant recovery tank. Add fresh coolant until the level is just below the overflow tube opening.

Note: A coolant solution of 50% ethylene glycol is required. This mix provides freezing protection to −37°C (−34°F) and overheating protection to 129°C (265°F). A coolant solution with less than 50% ethylene glycol may not provide adequate freezing and overheating protection. A coolant solution with more than 50% ethylene glycol can cause engine or component damage. Do not use alcohol or methanol antifreeze or mix them with the specified coolant. Consult the engine manufacturer's operation manual for engine coolant specifications.

Note: Do not add coolant to an overheated engine. Adding coolant to a hot engine can cause the cylinder block or cylinder head to crack. Wait until the engine has cooled.

Note: Pay special attention to the coolant level. After the coolant drains, allow time when refilling the coolant for a complete refill of the engine water jacket. Check the coolant level as prescribed in the Prestart Checklist.

3.6.3 Flushing and Cleaning

For optimum protection, drain, flush, and refill the cooling system at the interval listed in the service schedule.

Flushing and Cleaning Procedure

1. Open the pressure cap and open petcocks located at the heat exchanger, engine block, and cooling system, and let the system drain completely. Some models may have petcocks located behind the belt guard. Remove the pressure cap to simplify draining.
2. Drain, clean, and flush the coolant recovery tank.
3. Flush the system with clean water.
4. Fill the system with recommended coolant.

3.6.4 Pressure Cap

Closed heat exchanger systems utilize a pressure cap to raise the boiling point of the engine coolant, enabling proper operating temperatures. If the cap leaks, replace it with a cap of the same rating. The pressure cap typically has the pressure rating stamped on the cap body.

3.6.5 Seawater Pump

The belt-driven seawater pump is located on the service side of the generator set. Check and change the seawater pump impeller at the interval specified in the service schedule. Follow the instructions included with the impeller kit. If the instructions are not included with the kit, use the following procedure:

Impeller Inspection and Replacement Procedure:

1. Close the seacock.
2. Remove the seawater pump coverplate. See Figure 3-7.
3. Remove the impeller.
4. Inspect the impeller for damaged, cracked, broken, missing or flattened vanes. The impeller vanes should be straight and flexible. See Figure 3-8. Replace the impeller if it is damaged.

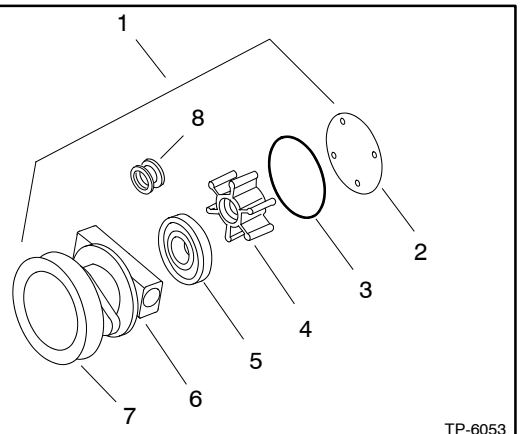

1. Seawater pump
2. Coverplate
3. Gasket
4. Impeller
5. Bearing
6. Housing
7. Pulley
8. Mechanical seal, if equipped

Figure 3-7 Seawater Pump, Typical

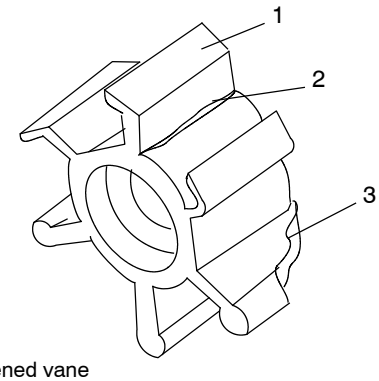

1. Flattened vane
2. Crack
3. Broken vane

Figure 3-8 Worn Impeller

5. Lubricate the impeller with soapy water before installation.
6. Install the impeller.

   Note: During installation push and rotate the impeller in the same direction as the engine rotation until it is thoroughly seated in the impeller housing.

7. Inspect the coverplate and gasket for corrosion and/or damage. Replace components as necessary.
8. Lubricate the gasket with silicon grease and attach the gasket and coverplate to the seawater pump housing.
9. Open the seacock.
10. Start the generator set and check for leaks.
11. Stop the generator set and repair leaks or replace damaged or worn components.

m:sm:003:008

3.6.6 Siphon Break

A siphon break prevents seawater entry into the generator set's engine when the engine exhaust manifold outlet is less than 230 mm (9 in.) above the waterline of a fully loaded, docked or stationary craft. See Figure 3-10. The siphon break may malfunction when the generator set operates while the craft is in contaminated waters or saltwater. Use the following procedure to inspect the siphon break at the intervals listed in the service schedule.

Siphon Break Inspection

1. Stop the generator set.
2. Remove the retaining cap and remove the reed valve for inspection. See Figure 3-9.
3. Use a mild detergent to remove residue and oxidation from the reed valve.
4. Clear blockage from the reed valve opening.
5. Replace the siphon break if the reed valve is cracked or if the reed valve material has hardened or deteriorated.
6. Install the reed valve into the mounting base with the valve downward. See Figure 3-9, item 2.
7. Install and only finger tighten the retaining cap. Do not overtighten it.

Note: Ensure that the siphon break's cap is tight before operating the generator set.

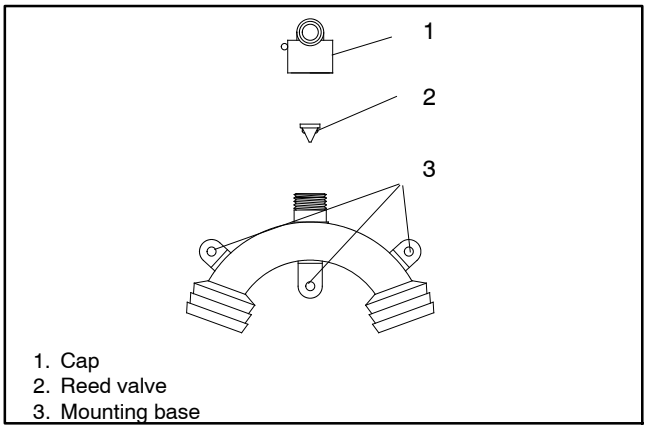

Figure 3-9 Siphon Break

m:sm:003:007

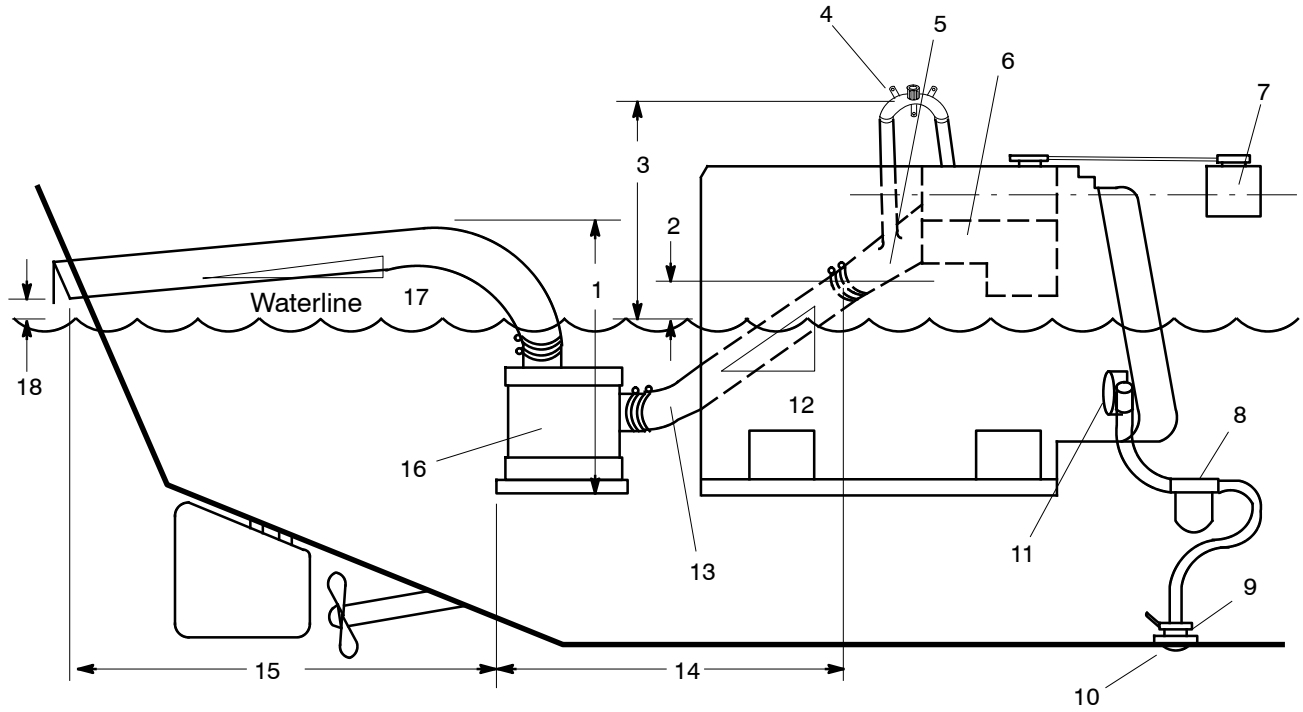

1. Silencer vertical lift 1.2 m (4 ft.) max.
2. Exhaust mixer elbow distance above waterline. If less than 23 cm (9 in.), a siphon break is required.
3. Siphon break distance above waterline 30.5 cm (1 ft.) min.
4. Siphon break
5. Exhaust mixer elbow
6. Heat exchanger (locations vary by model)
7. Coolant recovery tank
8. Seawater strainer
9. Seacock
10. Intake strainer
11. Engine-driven seawater pump
12. Exhaust hose pitch 1.3 cm per 30.5 cm (0.5 in. per ft.) min.
13. Water lock (optional)
14. Silencer distance from exhaust mixer elbow 3 m (10 ft.) max.
15. Maximum distance between silencer and exhaust outlet of 1.5 m (5 ft.)
16. Silencer (customer supplied)
17. Exhaust hose pitch 1.3 cm per 30.5 cm (0.5 in. per ft.) min.
18. Exhaust outlet distance above the waterline 10 cm (4 in.) min.

Figure 3-10 Siphon Break (Plastic “U” Type) Installation

Note: Consult the installation manual for complete explanation of dimensions and other installation considerations.

3.6.7 Anticorrosion Zinc Anode

The heat exchanger contains an anticorrosion zinc anode (plug) to prevent electrolytic corrosion by seawater.

Check and replace the anticorrosion zinc anode at intervals recommended in the service schedule. Depending upon operating conditions and seawater properties, the anticorrosion zinc anode may require more frequent replacement. See Section 1 for the location and use the following procedure.

Anticorrosion Zinc Anode Replacement

1. With the generator set cooled, close the seacock, open the petcock on the engine, and drain the coolant into a suitable container.

2. Remove the anticorrosion zinc anode (plug) from the heat exchanger.

3. Use a wire brush to remove the loose corrosion on the anticorrosion zinc anode. Replace the anode according to Figure 3-11 and Figure 3-12.

Anticorrosion Zinc Anode Replacement		
Models	**New Anode Dimensions mm (in.)**	**Replace When Percent of Zinc Remaining Is:**
6EKOD/ 5EFKOD, 9EKOZD/ 7EFKOZD, 11EKOZD/ 9EFKOZD	10 (0.39) x 17 (0.67)	<50% of length/diameter

Figure 3-11 Anticorrosion Zinc Anode (Plug) Measurements

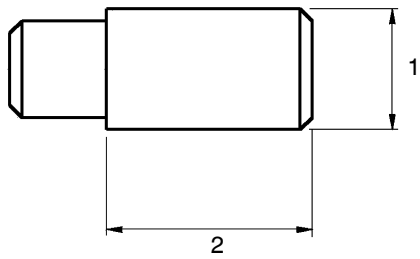

1. Diameter: 10 mm (0.39 in.)
2. Length: 17 mm (0.67 in.)

Figure 3-12 Anticorrosion Zinc Anode (Plug)

4. Clean the threaded hole of the heat exchanger and coat the threads of the anticorrosion zinc anode (plug) with pipe sealant suitable for marine applications. Cut the anticorrosion zinc to the correct length. Install the anticorrosion zinc anode into the heat exchanger.

5. Close the petcock on the engine and open the seacock. Refill the cooling system.

6. Start the generator set and check for leaks at the anticorrosion zinc anode location. The pump is operating if the cooling water flows from the exhaust outlet. If water is not discharging at the exhaust outlet, see Section 2.1, Prestart Checklist—Seawater Pump Priming.

3.7 Belt Tension

WARNING

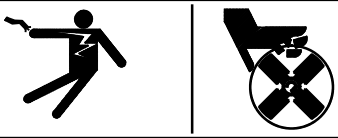

Hazardous voltage. Moving parts. Can cause severe injury or death.

Operate the generator set only when all guards and electrical enclosures are in place.

Servicing the generator set when it is operating. Exposed moving parts can cause severe injury or death. Keep hands, feet, hair, clothing, and test leads away from the belts and pulleys when the generator set is running. Replace guards, screens, and covers before operating the generator set.

Check the belt tension at the interval specified in the service schedule. If tension is not within the specification, adjust as necessary using the following procedure.

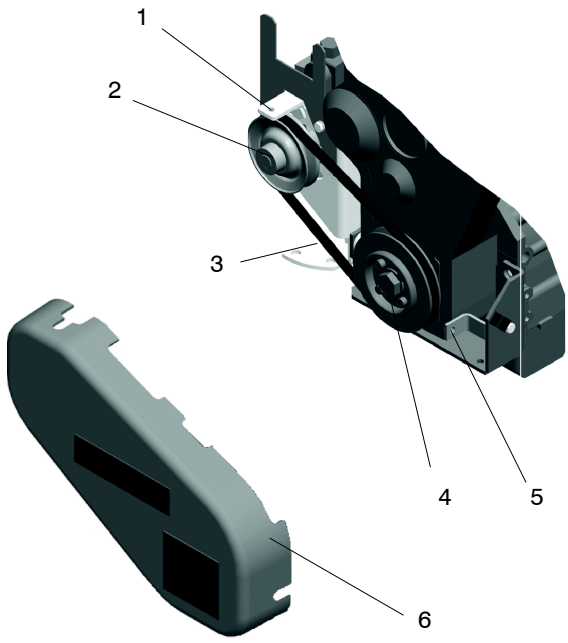

1. Seawater pump adjusting screw
2. Seawater pump pulley
3. Check the seawater pump belt deflection (tension) here
4. Crankshaft pulley
5. Pivot screw
6. Belt guard

Figure 3-13 Belt Tension

3.7.1 Seawater Pump Belt Tensioning Procedure

1. Remove the belt guard. See Figure 3-13.
2. Check the belt tension at the midpoint of the longest span of the belt by pressing with your finger approx. 10 kg (22 lbs.) of force. See Figure 3-14 for belt deflection. Recheck a new belt tension after 10 minutes of operation.

Deflection mm (in.)
10 (0.4)

Figure 3-14 Belt Specification

Note: If the belt tension is not within specification, go to step 3. If the belt tension is within specifications, go to step 7.

3. Loosen the pivot and adjusting screws.
4. While prying the seawater pump outward, tighten the adjusting screw.
5. Tighten the pivot screw.
6. Recheck and adjust as necessary.
7. Replace the belt guard.

3.8 Battery

Consult the battery manufacturer's instructions regarding battery care and maintenance.

3.9 Generator Storage Procedure

Keep the craft afloat for generator operation during the storage procedure. Follow the procedure below when storing your generator set for 3 months or more.

Generator Set Storage Procedure

1. Start and run the generator set until it reaches operating temperature or about 15 minutes.
2. Stop the generator set.
3. Change the oil and oil filter. See Section 3.3.3.
4. Close the seacock and remove the hose at the seacock. Place the hose in a container having approximately 3.7–7.5 L (1–2 U.S. gallons) of coolant/antifreeze. Kohler Co. recommends using an environmentally friendly potable antifreeze such as Peak® RV/marine propylene glycol/water mix or equivalent.
5. Disconnect the lead (#87) to the low seawater pressure (LWP) switch.
6. With a suitable container at the exhaust outlet, run the generator set until coolant discharges at the exhaust outlet or until the coolant mixture is depleted. Do not allow coolant mixture to flow into waterways.
7. Reconnect the lead (#87) to the low seawater pressure (LWP) switch.
8. Stop the generator set.
9. Connect a hose to the seacock. Leave the seacock closed.
10. Check the coolant level of the heat exchanger and add coolant if necessary.

    Note: Use antifreeze capable of withstanding the lowest possible temperatures.

11. Clean the exterior of the generator set and spread a light film of oil or silicon spray over any exposed surfaces that may be subject to rust or corrosion.
12. Disconnect and remove the battery. Place the battery in a warm, dry location for the storage period. Recharge the battery once a month to maintain a full charge.
13. Select a well-ventilated (not humid or dusty) location to store the generator.
14. Cover the entire unit with a dust cover.

    Note: Run the generator set once a month whenever possible.

Notes

Section 4 Troubleshooting

This section contains generator set troubleshooting, diagnostic, and repair information.

Use the following charts as a quick troubleshooting reference. The table groups generator set faults and suggests likely causes and remedies. The table also refers you to more detailed information including sections of this manual, the generator set service manual (S/M), the generator set installation manual (I/M), and the engine service manual (Engine S/M) to correct the indicated problem.

Corrective action and testing often require knowledge of electrical and electronic circuits. To avoid additional problems caused by incorrect repairs, have an authorized service distributor/dealer perform service.

NOTICE

Fuse replacement. Replace fuses with fuses of the same ampere rating and type (for example: 3AB or 314, ceramic). Do not substitute clear glass-type fuses for ceramic fuses. Refer to the wiring diagram when the ampere rating is unknown or questionable.

Maintain a record of repairs and adjustments performed on the equipment. If the procedures in this manual do not explain how to correct the problem, contact an authorized distributor/dealer. Use the record to help describe the problem and repairs or adjustments made to the equipment.

x:gt:001:002a:

4.1 Fault Codes

The Advanced Digital Control IId displays fault codes to aid in troubleshooting. Fault codes, descriptions, and recommended actions are listed in Section 2.7.1.

Identify and correct the cause of the fault condition. Then reset the controller after a fault shutdown. See Section 2.7.2.

Trouble Symptoms												
Does not crank	Cranks but does not start	Starts hard	No or low output voltage	Stops suddenly	Lacks power	Overheats	Low oil pressure	High fuel consumption	Excessive or abnormal noise	**Probable Causes**	**Recommended Actions**	**Section or Publication Reference***
Controller												
x				x						Generator set power button OFF	Press the power button to the ON position.	Section 2
x				x						Controller fuse (F2) blown	Replace the blown controller fuse. If the fuse blows again, troubleshoot the controller.†	Section 2, W/D
x				x						The customer connection fuse (F3) blown. Note that the remote digital gauge (if equipped) will not function	Replace the blown fuse. If the fuse blows again, check what is connected to the generator set.†	Section 2, W/D
				x						The auxiliary winding fuse (F1) blown	Replace the blown auxiliary winding fuse. If the fuse blows again, troubleshoot the controller.†	Section 2, W/D
x										Controller start/stop switch inoperative	Check the switch wiring.	—
				x						Controller fault	Troubleshoot the controller.†	Gen. S/M
x	x	x	x	x						Controller circuit board inoperative	Replace the controller circuit board.†	Gen. S/M
				x						Remote stop command received from a remote switch or ATS	Check the remote switch position.	
Cooling System												
						x		x		Air openings clogged	Clean the air openings.	—
						x				Impeller inoperative	Replace the impeller.	Section 3
						x		x		Seawater strainer clogged or restricted	Clean the strainer, check the seawater pump impeller for damage.	Section 3
				x						High temperature shutdown	Allow the engine to cool down. Then troubleshoot the cooling system.	Sec. 3, Eng. O/M
						x				Coolant level low	Restore the coolant to normal operating level.	Section 3
						x				Thermostat inoperative	Replace the thermostat.	Eng. S/M
						x				Cooling water pump inoperative	Tighten or replace the belt. Replace the water pump.	Eng. O/M or S/M

* Sec./Section—numbered section of this manual; ATS—Automatic Transfer Switch; Eng.—Engine; Gen.—Generator Set; I/M—Installation Manual; O/M—Operation Manual; S/M—Service Manual; S/S—Spec Sheet; W/D—Wiring Diagram

† Have an authorized service distributor/dealer perform this service.

Trouble Symptoms										Probable Causes	Recommended Actions	Section or Publication Reference*
Does not crank	Cranks but does not start	Starts hard	No or low output voltage	Stops suddenly	Lacks power	Overheats	Low oil pressure	High fuel consumption	Excessive or abnormal noise			
Electrical System (DC circuits)												
x	x									Battery connections loose, corroded, or incorrect	Verify that the battery connections are correct, clean, and tight.	Section 3
x	x									Battery weak or dead	Recharge or replace the battery. The spec sheet provides recommended battery CCA rating.	Section 3, S/S
x				x						Engine harness connector(s) not locked tight	Disconnect the engine harness connector(s) then reconnect it to the controller.	W/D
				x						Fault shutdown	Reset the controller.	Section 2
x										High exhaust temperature switch inoperative	Replace the inoperative switch.	Gen. S/M or W/D
				x		x				High water temperature switch inoperative	Replace the inoperative switch.	Gen. S/M or W/D
x	x									Starter/starter solenoid inoperative	Replace the starter or starter solenoid.	Eng. S/M
	x									Faulty ground connection	Clean and retighten the connection.	—
Engine												
	x	x				x		x	x	Compression weak	Check the compression.†	Eng. S/M
			x		x	x		x	x	Engine overload	Reduce the electrical load. See the generator set installation manual for wattage specifications.	I/M
									x	Exhaust system leak	Inspect the exhaust system. Replace the inoperative exhaust system components.†	Section 3, I/M
									x	Exhaust system not securely installed	Inspect the exhaust system. Tighten the loose exhaust system components.†	Section 3, I/M
				x						Overspeed shutdown	Reset the controller. If the overspeed fault occurs again, contact the distributor/dealer.	
		x	x		x			x		Governor inoperative	Adjust the governor.†	Gen. S/M
					x				x	Valve clearance incorrect	Adjust the valves.†	Eng. S/M
									x	Vibration excessive	Tighten all loose hardware.	—

* Sec./Section—numbered section of this manual; ATS—Automatic Transfer Switch; Eng.—Engine; Gen.—Generator Set; I/M—Installation Manual; O/M—Operation Manual; S/M—Service Manual; S/S—Spec Sheet; W/D—Wiring Diagram

† Have an authorized service distributor/dealer perform this service.

Trouble Symptoms										Probable Causes	Recommended Actions	Section or Publication Reference*
Does not crank	Cranks but does not start	Starts hard	No or low output voltage	Stops suddenly	Lacks power	Overheats	Low oil pressure	High fuel consumption	Excessive or abnormal noise			
Fuel System												
	x			x						Fuel tank empty or fuel valve shut off	Add fuel and move the fuel valve to the ON position.	—
	x	x		x	x					Fuel filter restriction	Clean or replace the fuel filter.	Eng. O/M
	x									Fuel solenoid inoperative	Troubleshoot the fuel solenoid.†	Eng. S/M
	x	x			x					Air in fuel system (diesel only)	Bleed the diesel fuel system.	Eng. O/M
	x	x			x					Fuel or fuel injectors dirty or faulty (diesel only)	Clean, test, and/or replace the inoperative fuel injector.†	Eng. S/M
	x	x			x			x		Fuel injection timing out of adjustment (diesel only)	Adjust the fuel injection timing.†	Eng. S/M
	x				x			x		Fuel feed or injection pump inoperative (diesel only)	Rebuild or replace the injection pump.†	Eng. S/M
Generator												
			x							AC output circuit breaker open	Reset the breaker and check for AC voltage at the generator side of the circuit breaker.	—
	x									Overcrank shutdown	Reset the controller. If the overcrank fault occurs again, contact the distributor/dealer.	—
x										Transfer switch test switch in the OFF position	Move the transfer switch test switch to the AUTO position.	ATS O/M
			x							Wiring, terminals, or pin in the exciter field open	Check for continuity.	Gen. S/M, W/D
			x							Main field (rotor) inoperative (open or grounded)	Test and/or replace the rotor.†	Gen. S/M
			x							Stator inoperative (open or grounded)	Test and/or replace the stator.†	Gen. S/M
									x	Vibration excessive	Tighten loose components.†	—
Lube System												
						x	x		x	Oil level low	Restore the oil level. Inspect the generator set for oil leaks.	Eng. O/M
				x						Low oil pressure shutdown	Check the oil level.	Eng. O/M
				x						Low oil pressure switch inoperative	Replace the low oil pressure switch. Check the engine for damage.	W/D
	x	x					x		x	Crankcase oil type incorrect for ambient temperature	Change the oil. Use oil with a viscosity suitable for the operating climate.	Eng. O/M

* Sec./Section—numbered section of this manual; ATS—Automatic Transfer Switch; Eng.—Engine; Gen.—Generator Set; I/M—Installation Manual; O/M—Operation Manual; S/M—Service Manual; S/S—Spec Sheet; W/D—Wiring Diagram

† Have an authorized service distributor/dealer perform this service.

⚠ WARNING

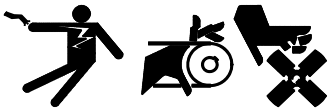

Accidental starting.
Can cause severe injury or death.

Disconnect the battery cables before working on the generator set. Remove the negative (–) lead first when disconnecting the battery. Reconnect the negative (–) lead last when reconnecting the battery.

Disabling the generator set. Accidental starting can cause severe injury or death. Before working on the generator set or equipment connected to the set, disable the generator set as follows: (1) Move the generator set master switch to the OFF position. (2) Disconnect the power to the battery charger. (3) Remove the battery cables, negative (–) lead first. Reconnect the negative (–) lead last when reconnecting the battery. Follow these precautions to prevent starting of the generator set by an automatic transfer switch, remote start/stop switch, or engine start command from a remote computer.

⚠ WARNING

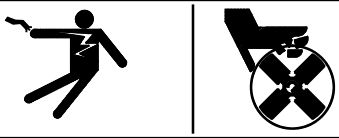

Hazardous voltage. Moving parts.
Can cause severe injury or death.

Operate the generator set only when all guards and electrical enclosures are in place.

Grounding electrical equipment. Hazardous voltage can cause severe injury or death. Electrocution is possible whenever electricity is present. Ensure you comply with all applicable codes and standards. Electrically ground the generator set, transfer switch, and related equipment and electrical circuits. Turn off the main circuit breakers of all power sources before servicing the equipment. Never contact electrical leads or appliances when standing in water or on wet ground because these conditions increase the risk of electrocution.

5.1 Wiring Diagram Reference

Model	Point-to-Point	Figure	Schematic	Figure	Accessory	Figure
6EKOD/5EFKOD 9EKOZD/7EFKOZD 11EKOZD/9EFKOZD	GM102098-	Figure 5-3	ADV-8945-	Figure 5-4	GM33846-E	Figure 5-7 Figure 5-8

Figure 5-1 Wiring Diagrams for Units without Isolated Ground

Model	Point-to-Point	Figure	Schematic	Figure	Accessory	Figure
6EKOD/5EFKOD 9EKOZD/7EFKOZD 11EKOZD/9EFKOZD	GM102099-	Figure 5-5	ADV-8946-	Figure 5-6	GM33846-E	Figure 5-7 Figure 5-8

Figure 5-2 Wiring Diagrams for Units with Isolated Ground

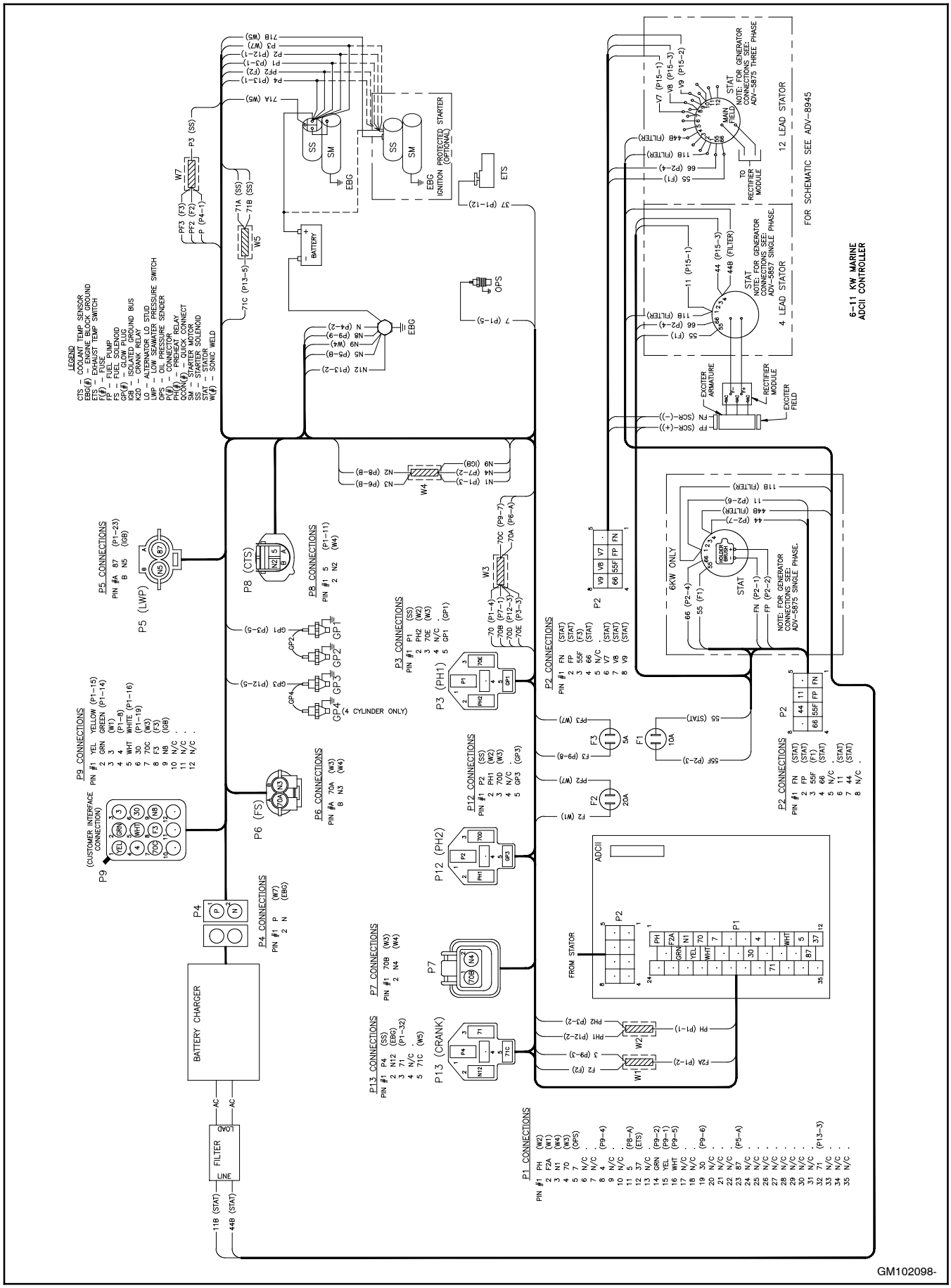

Figure 5-3 Wiring Diagram, Point-to-Point

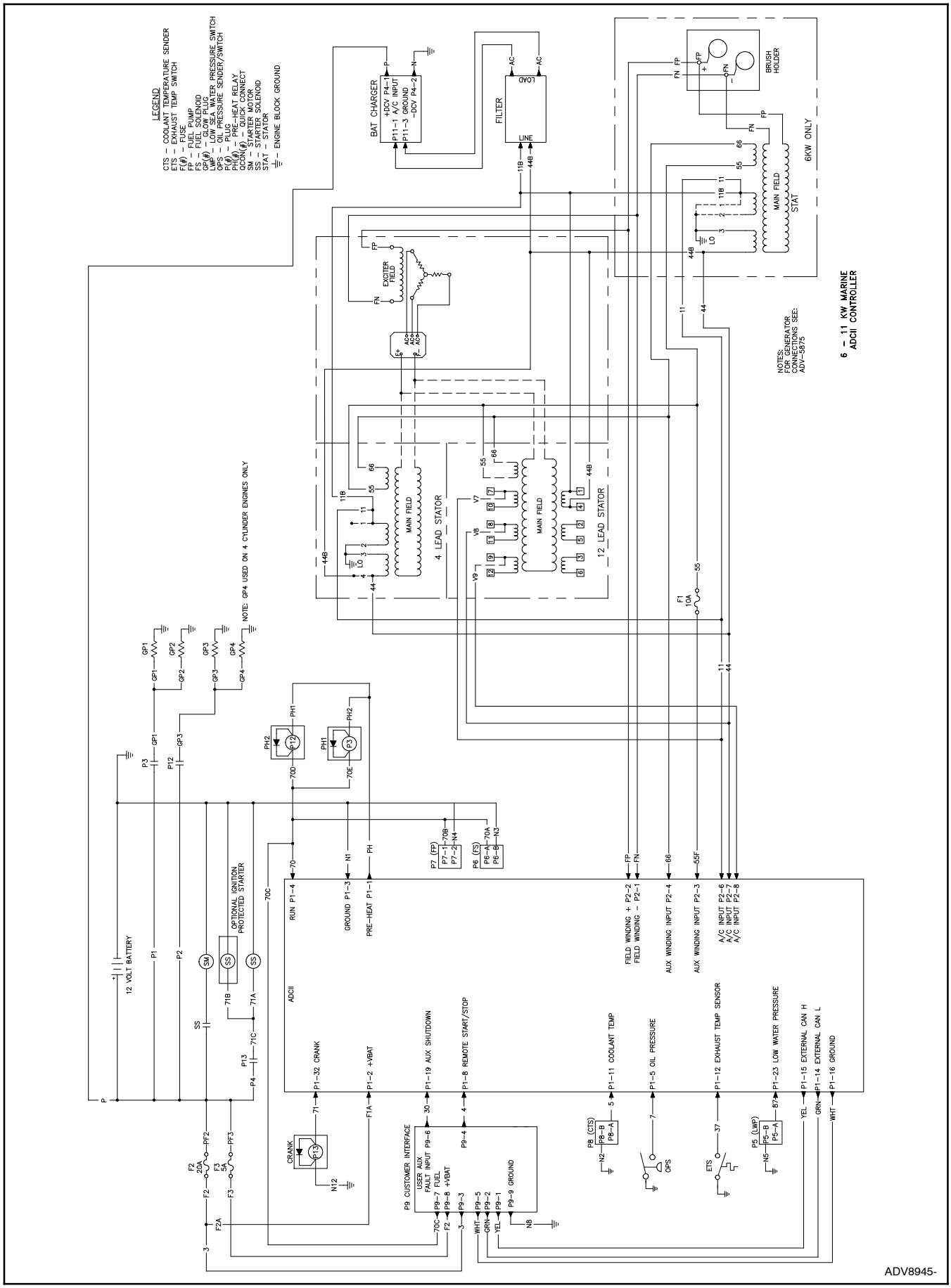

Figure 5-4 Wiring Diagram, Schematic

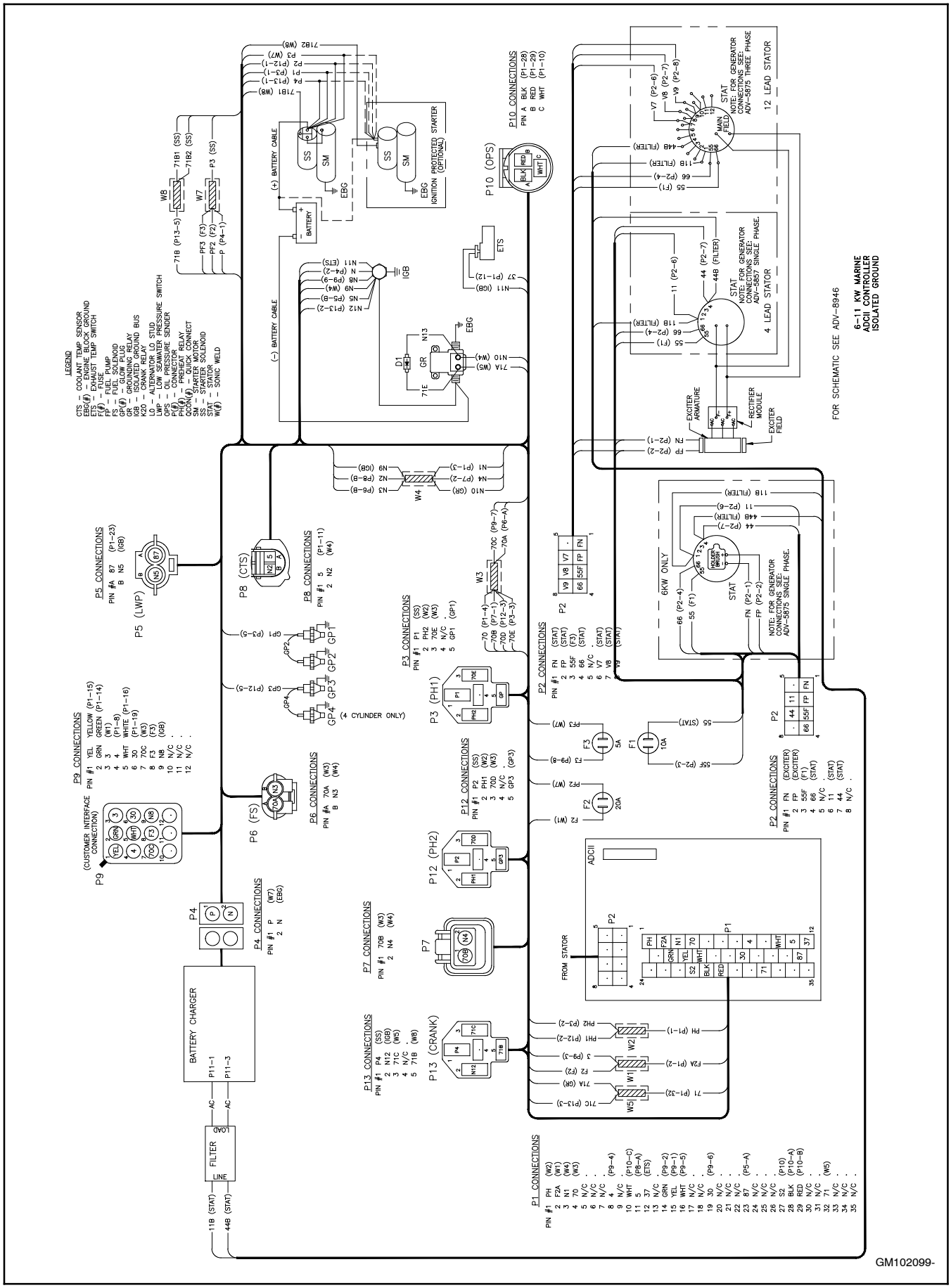

Figure 5-5 Isolated Ground Wiring Diagram, Point-to-Point

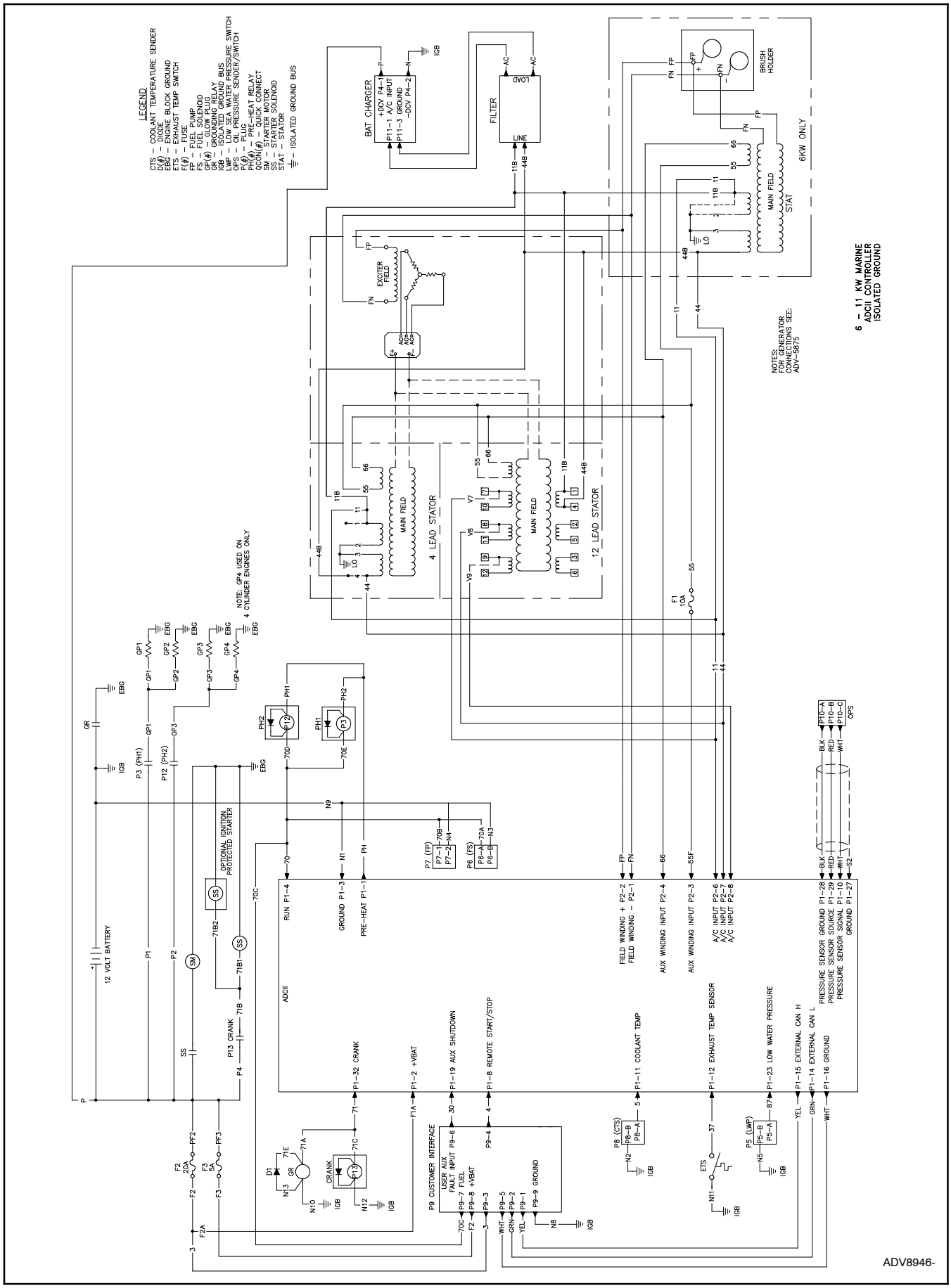

Figure 5-6 Isolated Ground Wiring Diagram, Schematic

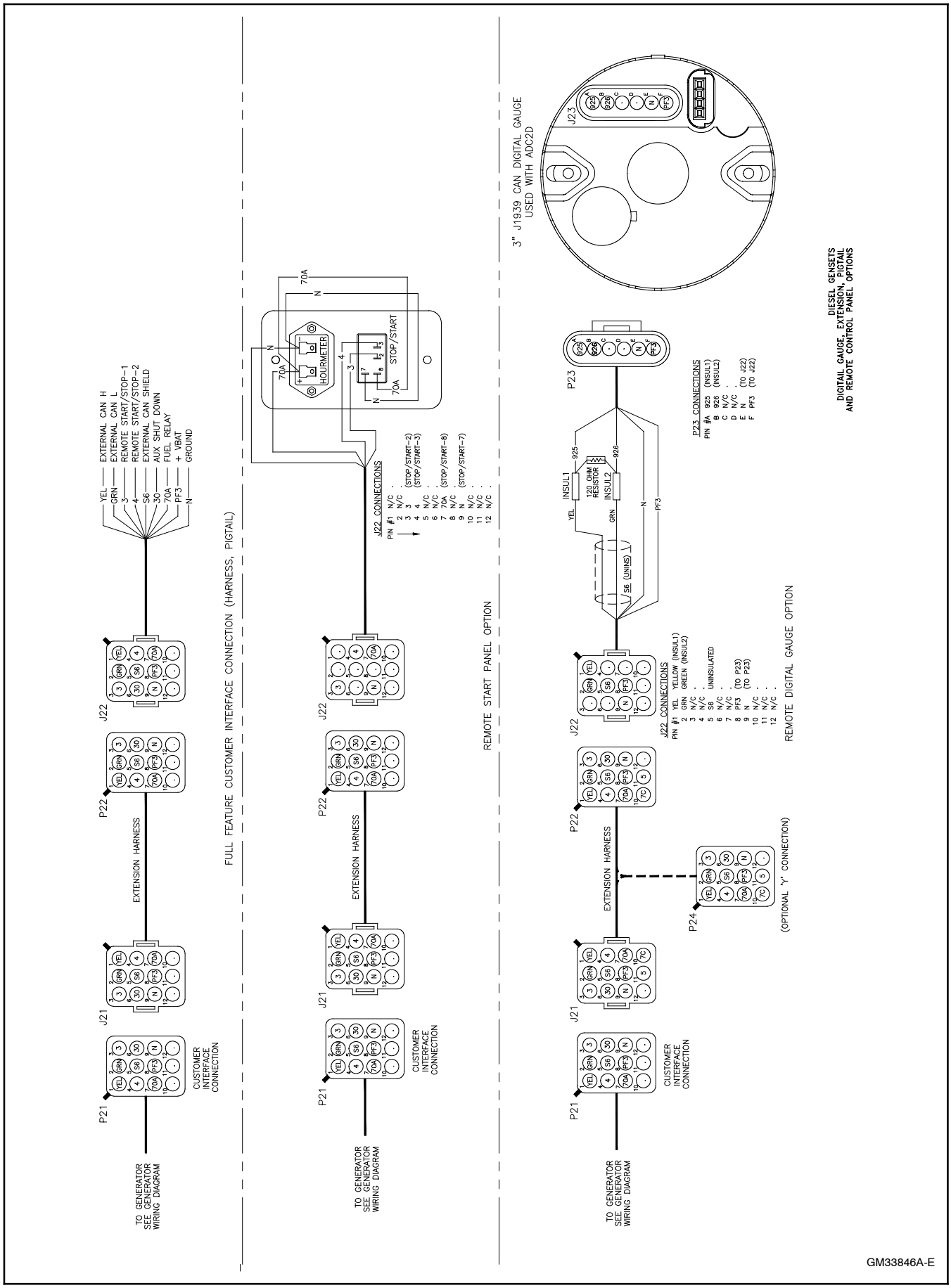

Figure 5-7 Accessory Interconnection Drawing (Sheet 1 of 2)

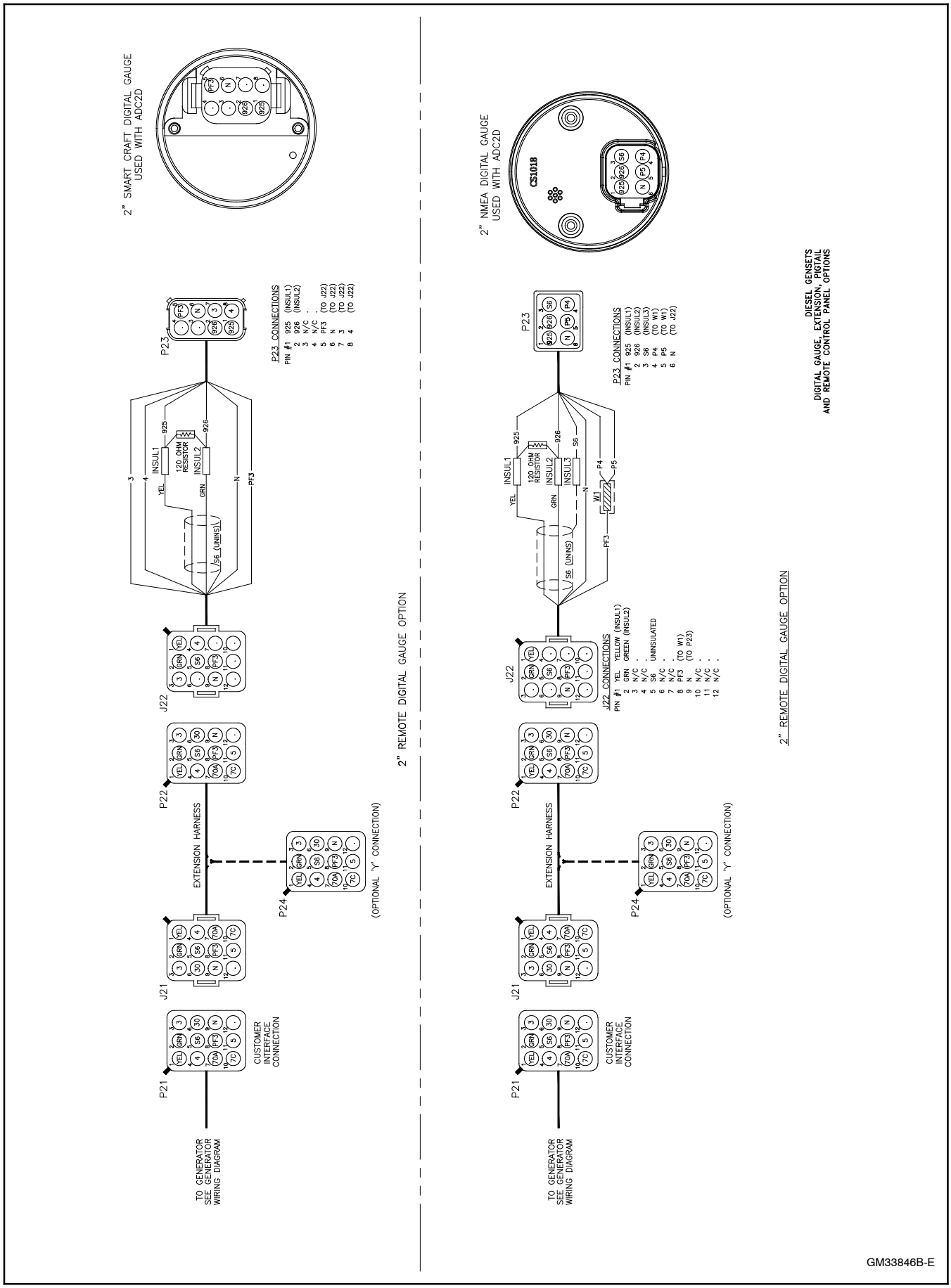

Figure 5-8 Accessory Interconnection Drawing (Sheet 2 of 2)

Notes

Appendix A Abbreviations

The following list contains abbreviations that may appear in this publication.

A, amp	ampere
ABDC	after bottom dead center
AC	alternating current
A/D	analog to digital
ADC	analog to digital converter
adj.	adjust, adjustment
ADV	advertising dimensional drawing
AHWT	anticipatory high water temperature
AISI	American Iron and Steel Institute
ALOP	anticipatory low oil pressure
alt.	alternator
Al	aluminum
ANSI	American National Standards Institute (formerly American Standards Association, ASA)
AO	anticipatory only
API	American Petroleum Institute
approx.	approximate, approximately
AR	as required, as requested
AS	as supplied, as stated, as suggested
ASE	American Society of Engineers
ASME	American Society of Mechanical Engineers
assy.	assembly
ASTM	American Society for Testing Materials
ATDC	after top dead center
ATS	automatic transfer switch
auto.	automatic
aux.	auxiliary
A/V	audiovisual
avg.	average
AVR	automatic voltage regulator
AWG	American Wire Gauge
AWM	appliance wiring material
bat.	battery
BBDC	before bottom dead center
BC	battery charger, battery charging
BCA	battery charging alternator
BCI	Battery Council International
BDC	before dead center
BHP	brake horsepower
blk.	black (paint color), block (engine)
blk. htr.	block heater
BMEP	brake mean effective pressure
bps	bits per second
br.	brass
BTDC	before top dead center
Btu	British thermal unit
Btu/min.	British thermal units per minute
C	Celsius, centigrade
cal.	calorie
CARB	California Air Resources Board
CB	circuit breaker
cc	cubic centimeter
CCA	cold cranking amps
ccw.	counterclockwise
CEC	Canadian Electrical Code
cfh	cubic feet per hour
cfm	cubic feet per minute
CG	center of gravity
CID	cubic inch displacement
CL	centerline
cm	centimeter
CMOS	complementary metal oxide substrate (semiconductor)
cogen.	cogeneration
Com	communications (port)
conn.	connection
cont.	continued
CPVC	chlorinated polyvinyl chloride
crit.	critical
CRT	cathode ray tube
CSA	Canadian Standards Association
CT	current transformer
Cu	copper
cu. in.	cubic inch
cw.	clockwise
CWC	city water-cooled
cyl.	cylinder
D/A	digital to analog
DAC	digital to analog converter
dB	decibel
dBA	decibel (A weighted)
DC	direct current
DCR	direct current resistance
deg., °	degree
dept.	department
dia.	diameter
DI/EO	dual inlet/end outlet
DIN	Deutsches Institut fur Normung e. V. (also Deutsche Industrie Normenausschuss)
DIP	dual inline package
DPDT	double-pole, double-throw
DPST	double-pole, single-throw
DS	disconnect switch
DVR	digital voltage regulator
E, emer.	emergency (power source)
EDI	electronic data interchange
EFR	emergency frequency relay
e.g.	for example (*exempli gratia)*
EG	electronic governor
EGSA	Electrical Generating Systems Association
EIA	Electronic Industries Association
EI/EO	end inlet/end outlet
EMI	electromagnetic interference
emiss.	emission
eng.	engine
EPA	Environmental Protection Agency
EPS	emergency power system
ER	emergency relay
ES	engineering special, engineered special
ESD	electrostatic discharge
est.	estimated
E-Stop	emergency stop
etc.	et cetera (and so forth)
exh.	exhaust
ext.	external
F	Fahrenheit, female
fglass.	fiberglass
FHM	flat head machine (screw)
fl. oz.	fluid ounce
flex.	flexible
freq.	frequency
FS	full scale
ft.	foot, feet
ft. lbs.	foot pounds (torque)
ft./min.	feet per minute
g	gram
ga.	gauge (meters, wire size)
gal.	gallon
gen.	generator
genset	generator set
GFI	ground fault interrupter
GND, ⏚	ground
gov.	governor
gph	gallons per hour
gpm	gallons per minute
gr.	grade, gross
GRD	equipment ground
gr. wt.	gross weight
H x W x D	height by width by depth
HC	hex cap
HCHT	high cylinder head temperature
HD	heavy duty
HET	high exhaust temperature
hex	hexagon
Hg	mercury (element)
HH	hex head
HHC	hex head cap
HP	horsepower
hr.	hour
HS	heat shrink
hsg.	housing
HVAC	heating, ventilation, and air conditioning
HWT	high water temperature
Hz	hertz (cycles per second)
IC	integrated circuit
ID	inside diameter, identification
IEC	International Electrotechnical Commission
IEEE	Institute of Electrical and Electronics Engineers
IMS	improved motor starting
in.	inch
in. H_2O	inches of water
in. Hg	inches of mercury
in. lbs.	inch pounds
Inc.	incorporated
ind.	industrial
int.	internal
int./ext.	internal/external
I/O	input/output
IP	iron pipe
ISO	International Organization for Standardization
J	joule
JIS	Japanese Industry Standard
k	kilo (1000)
K	kelvin
kA	kiloampere
KB	kilobyte (2^{10} bytes)

kg	kilogram
kg/cm^2	kilograms per square centimeter
kgm	kilogram-meter
kg/m^3	kilograms per cubic meter
kHz	kilohertz
kJ	kilojoule
km	kilometer
kOhm, kΩ	kilo-ohm
kPa	kilopascal
kph	kilometers per hour
kV	kilovolt
kVA	kilovolt ampere
kVAR	kilovolt ampere reactive
kW	kilowatt
kWh	kilowatt-hour
kWm	kilowatt mechanical
L	liter
LAN	local area network
L x W x H	length by width by height
lb.	pound, pounds
lbm/ft^3	pounds mass per cubic feet
LCB	line circuit breaker
LCD	liquid crystal display
ld. shd.	load shed
LED	light emitting diode
Lph	liters per hour
Lpm	liters per minute
LOP	low oil pressure
LP	liquefied petroleum
LPG	liquefied petroleum gas
LS	left side
L_{wa}	sound power level, A weighted
LWL	low water level
LWT	low water temperature
m	meter, milli (1/1000)
M	mega (10^6 when used with SI units), male
m^3	cubic meter
m^3/min.	cubic meters per minute
mA	milliampere
man.	manual
max.	maximum
MB	megabyte (2^{20} bytes)
MCM	one thousand circular mils
MCCB	molded-case circuit breaker
meggar	megohmmeter
MHz	megahertz
mi.	mile
mil	one one-thousandth of an inch
min.	minimum, minute
misc.	miscellaneous
MJ	megajoule
mJ	millijoule
mm	millimeter
mOhm, mΩ	milliohm
MOhm, MΩ	megohm
MOV	metal oxide varistor
MPa	megapascal
mpg	miles per gallon
mph	miles per hour
MS	military standard
m/sec.	meters per second
MTBF	mean time between failure
MTBO	mean time between overhauls
mtg.	mounting
MW	megawatt
mW	milliwatt
μF	microfarad
N, norm.	normal (power source)
NA	not available, not applicable
nat. gas	natural gas
NBS	National Bureau of Standards
NC	normally closed
NEC	National Electrical Code
NEMA	National Electrical Manufacturers Association
NFPA	National Fire Protection Association
Nm	newton meter
NO	normally open
no., nos.	number, numbers
NPS	National Pipe, Straight
NPSC	National Pipe, Straight-coupling
NPT	National Standard taper pipe thread per general use
NPTF	National Pipe, Taper-Fine
NR	not required, normal relay
ns	nanosecond
OC	overcrank
OD	outside diameter
OEM	original equipment manufacturer
OF	overfrequency
opt.	option, optional
OS	oversize, overspeed
OSHA	Occupational Safety and Health Administration
OV	overvoltage
oz.	ounce
p., pp.	page, pages
PC	personal computer
PCB	printed circuit board
pF	picofarad
PF	power factor
ph., ∅	phase
PHC	Phillips head crimptite (screw)
PHH	Phillips hex head (screw)
PHM	pan head machine (screw)
PLC	programmable logic control
PMG	permanent-magnet generator
pot	potentiometer, potential
ppm	parts per million
PROM	programmable read-only memory
psi	pounds per square inch
pt.	pint
PTC	positive temperature coefficient
PTO	power takeoff
PVC	polyvinyl chloride
qt.	quart
qty.	quantity
R	replacement (emergency) power source
rad.	radiator, radius
RAM	random access memory
RDO	relay driver output
ref.	reference
rem.	remote
RFI	radio frequency interference
RH	round head
RHM	round head machine (screw)
rly.	relay
rms	root mean square
rnd.	round
ROM	read only memory
rot.	rotate, rotating
rpm	revolutions per minute
RS	right side
RTV	room temperature vulcanization
SAE	Society of Automotive Engineers
scfm	standard cubic feet per minute
SCR	silicon controlled rectifier
s, sec.	second
SI	*Systeme international d'unites,* International System of Units
SI/EO	side in/end out
sil.	silencer
SN	serial number
SPDT	single-pole, double-throw
SPST	single-pole, single-throw
spec, specs	specification(s)
sq.	square
sq. cm	square centimeter
sq. in.	square inch
SS	stainless steel
std.	standard
stl.	steel
tach.	tachometer
TD	time delay
TDC	top dead center
TDEC	time delay engine cooldown
TDEN	time delay emergency to normal
TDES	time delay engine start
TDNE	time delay normal to emergency
TDOE	time delay off to emergency
TDON	time delay off to normal
temp.	temperature
term.	terminal
TIF	telephone influence factor
TIR	total indicator reading
tol.	tolerance
turbo.	turbocharger
typ.	typical (same in multiple locations)
UF	underfrequency
UHF	ultrahigh frequency
UL	Underwriter's Laboratories, Inc.
UNC	unified coarse thread (was NC)
UNF	unified fine thread (was NF)
univ.	universal
US	undersize, underspeed
UV	ultraviolet, undervoltage
V	volt
VAC	volts alternating current
VAR	voltampere reactive
VDC	volts direct current
VFD	vacuum fluorescent display
VGA	video graphics adapter
VHF	very high frequency
W	watt
WCR	withstand and closing rating
w/	with
w/o	without
wt.	weight
xfmr	transformer

Use the log below to keep a cumulative record of operating hours on your generator set and the dates required services were performed. Enter hours to the nearest quarter hour.

DATE RUN	OPERATING HOURS		SERVICE RECORD	
	HOURS RUN	TOTAL HOURS	SERVICE DATE	SERVICE

Appendix C Voltage Regulator Definitions and Adjustments

The following definitions and adjustment/setting specifications are intended for users planning to adjust the voltage regulator beyond the default settings in order to customize the alternator for a specific application.

This information is not intended to be a comprehensive explanation of all the terms mentioned. There are numerous documents available that define these terms more completely than described herein. Any user planning to change the generator set controller adjustment settings or to apply the generator set to these types of applications should understand these terms.

This appendix contains references to other sections of this manual. Please refer to these sections for further information and explanation.

Paralleling generator sets can be a complicated and dangerous exercise. Application programming must be performed by appropriately skilled and suitably-trained personnel.

Definitions

Underfrequency Unloading

Underfrequency unloading is a function used in the alternator excitation control system to improve the overall generator set system (engine and alternator) response. In particular, underfrequency unloading relates to large-block load applications. When applied to engine-driven alternators, large-block loads cause a subsequent transient torque load on the engine. This torque load can reduce the engine's speed below the normal operating point. Typically, the engine speed controller or governor will compensate for this by commanding an increase in fuel. If, however, the fuel system is inadequate to recover from a relatively large load, the speed may never recover. In these instances, other measures must be taken. This is where the underfrequency unloading occurs.

When the excitation control system detects a drop in the speed or electrical frequency below some predetermined point, the control system enters an unloading condition. This can be described as moving to a lower voltage regulation point. By reducing the output voltage of the alternator, the load on the generator set is reduced. This can be shown mathematically by Ohm's law, which states that power is equal to the voltage squared divided by the impedance. As the voltage is reduced, the power delivered by the alternator decreases by a squared relationship. Since it is the power in the alternator that translates into engine torque, the engine load is also reduced.

By changing various parameters of this compensation technique, the controlling system can be tailored to match the performance capabilities of most engine and alternator combinations. The point at which the unloading begins to act or how much unloading occurs can be adjusted to impact maximum voltage droop, maximum speed droop, or time to recover. Some applications may not need unloading and, in these cases, set the unloading parameter to disable the function. These parameters are further described below. An example is provided to help clarify the relationship between these parameters.

Underfrequency Unload Slope

Underfrequency unload slope is the term used to describe the amount that the voltage is reduced, per-cycle-per-second or per-hertz (Hz), when in an underfrequency condition. The slope or schedule is sometimes called the volts-per-hertz slope. When the electrical frequency drops below the cut-in point (see below), the excitation control system temporarily reduces the regulated voltage to reduce the subsequent torque on the engine. The amount that the control system reduces voltage is defined as the product or multiplication of the slope and the amount of frequency or speed below the cut-in point. For every Hz below the cut-in point, the control system reduces the line-to-line voltage by an amount equal to the slope.

Because each engine responds differently to the various loads encountered, the slope may be adjusted to improve the system response. If, when large loads are applied to the generator set, the engine speed drops below the acceptable limit (as determined by the particular loads applied), the slope may need to be increased. Increasing the slope will cause the voltage to droop more during load applications, consequently reducing the load torque on the engine and allowing the speed to increase. If, however, the voltage drops below an acceptable lower limit (as determined by the particular loads connected to the generator set), a lower slope may work better. The underfrequency unloading function may be disabled by setting the slope to zero.

Frequency Setpoint or Cut-In Point

The point at which the underfrequency unloading begins to take effect is adjustable, allowing the system to be tailored for each application. Because the characteristics of the engine have the largest effect on the system's performance, the engine's response should determine the unloading point. The unloading setpoint is the frequency below which the excitation control will reduce the voltage so that the engine may begin to recover.

The cut-in point, or frequency setpoint, should be set 0.5–3.0 Hz lower than the normal steady-state band of operation. If the engine normally operates within a very narrow range of speeds close to the nominal, a setpoint of 0.5 to 1.0 Hz below nominal should be suitable. If the engine normally operates over a wide range of speeds, the setpoint may need to be 2.0–3.0 Hz from the nominal. The underfrequency unloading function can be eliminated by setting the cut-in point below the minimum expected operating frequency.

Three-Phase Sensing

Three-phase sensing describes how the excitation control or voltage regulator determines the condition of the alternator output voltage. Early types of regulators sensed the voltage on just one phase of the alternator. Single-phase sensing is not uncommon today as most alternators are designed to produce balanced, equal voltage on all three phases. If the loads applied to the generator set including no load are equal and balanced, the output voltage on each phase will be nearly equal.

However, in some applications, individual phases may have unequal or unbalanced loads. In these cases, the output voltages will not be equal on each phase. In general, the phase with the greatest load will have the lowest voltage while the phase with the least load will have the highest voltage. This is true regardless of the type of sensing used in the regulator system. A single-phase sensing excitation controller will keep the voltage of the sensed phase at the voltage adjustment value. A three-phase sensing system will average the three phases and hold the average to the adjustment setting. The average is the sum of the voltages of three phases divided by 3.

As stated above, three-phase sensing does not eliminate the unequal voltage phenomenon. Three-phase sensing balances the inequality of voltage between the phases to the desired value. In other words, if a system with unbalanced loads uses a single-phase control feedback, the voltage on the sensed phase would be at the setpoint while the other two phases would vary by their proportional loads. For example, if the sensed phase had rated load while the two other phases were only loaded at half the rated value, those two phases would have higher-than-rated voltage which may be undesirable. If a three-phase sensing feedback were utilized, the phase with rated load would be regulated to a voltage slightly below the rated voltage while the other two phases would be slightly above the rated voltage (but lower than in the previous case). The sum of the three, divided by 3, would be equal to the regulation setpoint.

In a single-phase system, line-to-line voltage is held equal to the line-to-line voltage adjust setting. In a three-phase system, the average of the three line-to-line voltage is regulated to the voltage adjust setting. In some cases, it may be desirable to keep one phase at a particular value. Modify the voltage adjust setting higher or lower accordingly for any unique requirements for the particular application.

Adjustment and Setting Specifications

Voltage Adjust

The voltage adjust is entered as the rated or otherwise desired line-to-line voltage. The average of the line-to-line voltages is then regulated to the corresponding value as previously described. The setting may be as fine as tenths of volts. The voltage adjust defaults to the rated system voltage whenever the system voltage is changed. The voltage adjust may be set to any value within ±10% of the system voltage. The upper limit is ±10% above the system voltage and the lower limit is ±10% below the system voltage.

As a reference, the present voltage adjust setting is displayed as well as the average value of the line-to-line voltages. The individual line-to-line voltages are also displayed on the subsequent menu screens. This allows the user to monitor any individual phase, if desired.

The voltage adjust setting may be changed by means other than the menu including user-defined digital input or remote communications. If voltage adjustment occurs, the new value will be displayed accordingly in the voltage adjust menu.

Underfrequency Unload Enable

The underfrequency unload enable menu is used to turn the underfrequency unload on or off. A YES entry will turn the feature on and the display will show ENABLED YES. A NO entry will turn the feature off and the display will show ENABLED NO. The underfrequency unload defaults to an enabled (ON) condition.

Frequency Setpoint

The frequency setpoint is the cut-in point for underfrequency unloading. At any operating frequency below the frequency setpoint, the output voltage will be reduced. The frequency may be entered with resolution to tenths of a Hz. The range of acceptable entries is 30 to 70 Hz. The default value is one cycle-per-second (or two for non-ECM engines) below the normal system frequency. The frequency setpoint changes to the default value if the system frequency changes. A setting of 30 Hz essentially disables the underfrequency unload feature because most engines do not normally drop to speeds this low, even during load applications.

Underfrequency Unload Slope

The slope determines how much voltage is reduced during an unloading condition. The line-to-line voltage is regulated to a value less than the voltage adjust setting by this amount for every cycle below the frequency setpoint. The voltage may be entered with resolution as fine as one-tenth of one volt. The default value is 2.0 volts per-cycle-per-second. A zero entry for the slope in effect turns the underfrequency unload feature off.

Notes

KOHLER®
Power Systems

KOHLER CO. Kohler, Wisconsin 53044
Phone 920-457-4441, Fax 920-459-1646
For the nearest sales/service outlet in the
US and Canada, phone 1-800-544-2444
KOHLERPower.com

Kohler Power Systems
Asia Pacific Headquarters
7 Jurong Pier Road
Singapore 619159
Phone (65) 6264-6422, Fax (65) 6264-6455

TP-6772 8/17c

Original Instructions (English)

© 2011, 2012, 2014, and 2017 by Kohler Co. All rights reserved.