TECHNICAL DATA SHEET

ALTERNATOR CPS18 XSA - 60Hz

Single-Phase brushless synchronous alternator with AVR - 4 poles

CPS18 XSA - 60Hz

COMMON DATA

Rated Power at 60Hz	kVA	7
Rated Power Factor		1
Nominal Temperature	°C	40
Control System		self-excited
Execution		brushless
Regulation Type		AVR
Insulation Class		H
Protection		IP23
Maximum Over speed	rpm	2250
Overload		110% of rated power for one hour in a cycle of 6 hours
Air Flow Requirement	m^3/min	4,5 at 60Hz
R.F.I. Suppression		Standard EN55011

REGULATION DATA

AVR	HVR11
Sensing	single-phase
Voltage Regulation	±1%
Sustained Short Circuit	> 250% of rated current

WINDING DATA

Stator Winding		Single layer with auxiliary winding
Rotor Winding		with damping cage
Winding Pitch		2/3
Number of Leads of Stator		4
Stator Winding Resistance	(1-2) Ω	0,42 at 20°C
Rotor Winding Resistance	Ω	1,90 at 20°C
Exciter Stator Resistance	Ω	12 at 20°C
Exciter Rotor Resistance	Ω	0,82 at 20°C
THD at full load		< 5,5%
THD at no load		< 3,5%
Excitation at no load	Adc	0,72
Excitation at full load	Adc	1.90

STANDARD

References	EN60034-1 ISO8528-3 EN55011

ON REQUEST

UL 1446, Systems of Insulating Materials - General CSA-C22.2 No. 0, Appendix B, General Requirements - Canadian Electrical Code, Part I

CPS18 XSA - 60Hz

ELECTRICAL DATA

Frequency		60Hz- 1800rpm		
Voltage	V	**110/220**	**115/230**	**120/240**
Rated Power in Class H (125°C/40°C)	kW	6,5	7,0	7,0
Rated Power in Class F (105°C/40°C)	kW	6,0	6,5	6,5
Rated Power Standby (150°C/40°C)	kW	7,0	7,6	7,6
Rated Power Standby (163°C/27°C)	kW	7,4	8,0	8,0

EFFICIENCY IN CL. H @ 1P.F

4/4			77,2%
3/4			80,2%
2/4			72,4%
1/4			64,0%

REACTANCES AND TIME CONSTANTS

ρcc				0.47
Xd	- dir. axis synchronous	263%	259%	238%
X'd	- dir. axis transient	31,0%	30,5%	28,0%
X''d	- dir. axis subtransient	19,0%	18,7%	17,2%
X_q	- quad. axis reactance	149%	147%	135%
T'_{do}	- O.C. field time constant	230ms		
T'_d	- Transient time constant	27ms		
T''_d	- Sub-transient time constant	6ms		

MECHANICAL DATA

Bearing non drive end			6306-2RS-C3
Bearing drive end (B3/B14 form)			\
Weight of generator	in B2	kg	***
	in B3/B14	kg	\
	in B3/B9	kg	\

CPS18 XSA - 60Hz

MOMENT OF INERZIA

SAE 6½	kg·m²	0,102
SAE 7½	kg·m²	0,105

DERATING CURVES

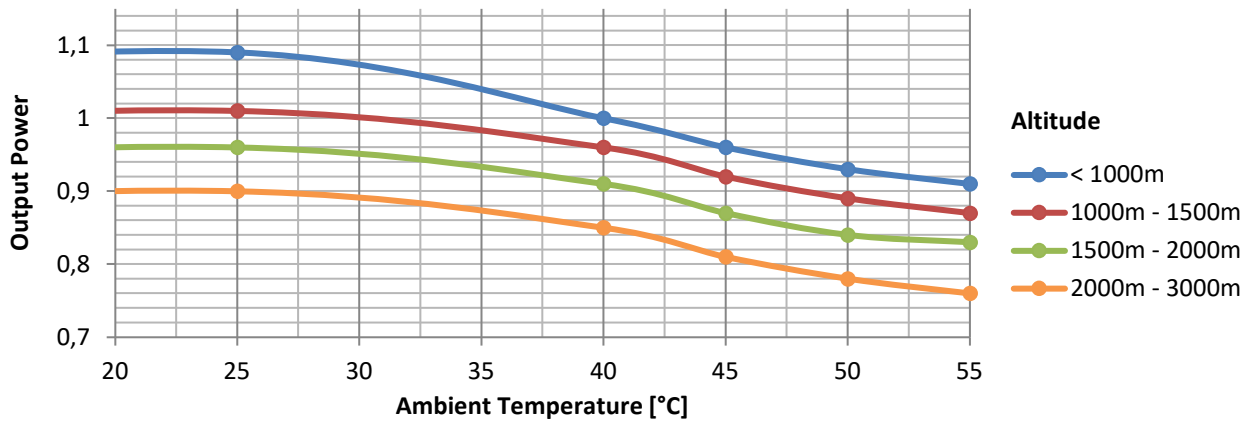

WIRING DIAGRAM

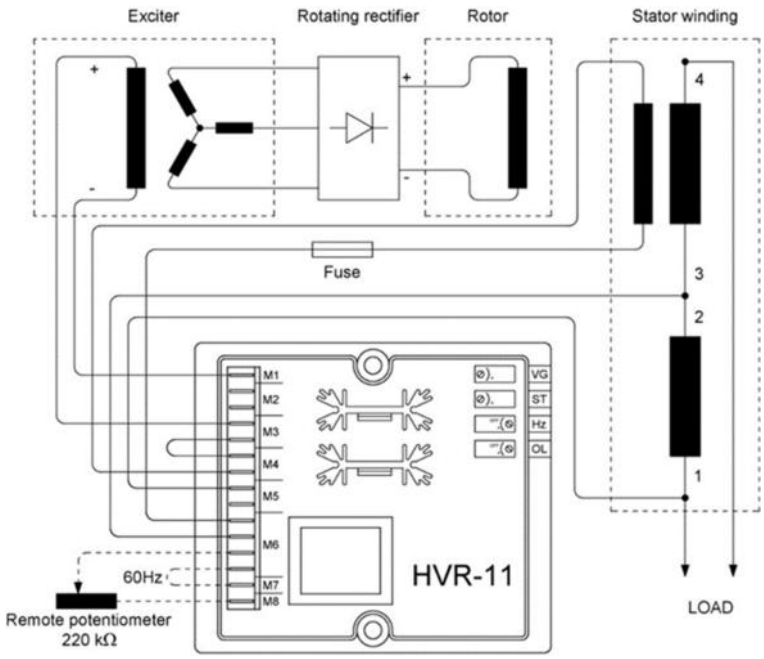

CPS18 XSA - 60Hz

TRANSIENT VOLTAGE VARIATION 60Hz

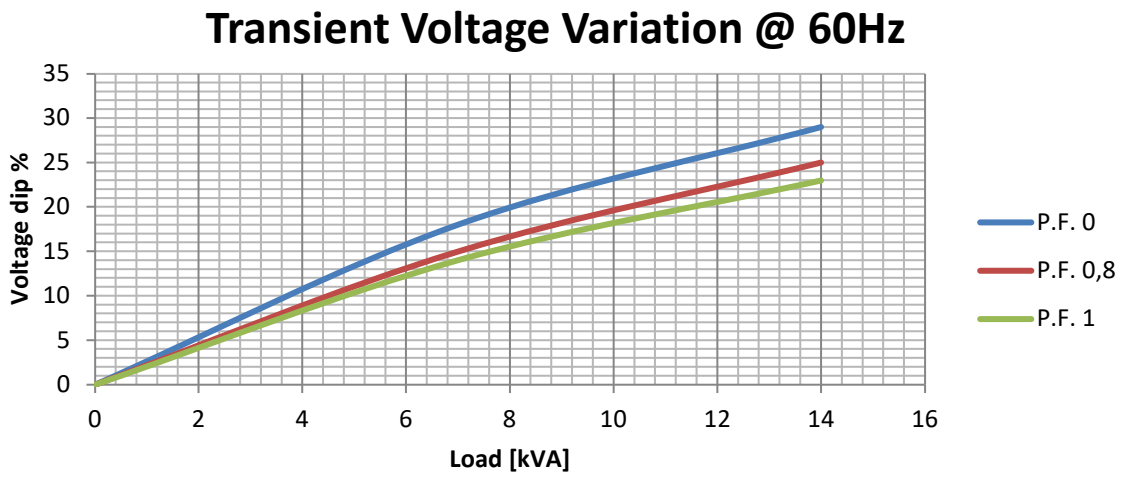

EFFICIENCY 60Hz

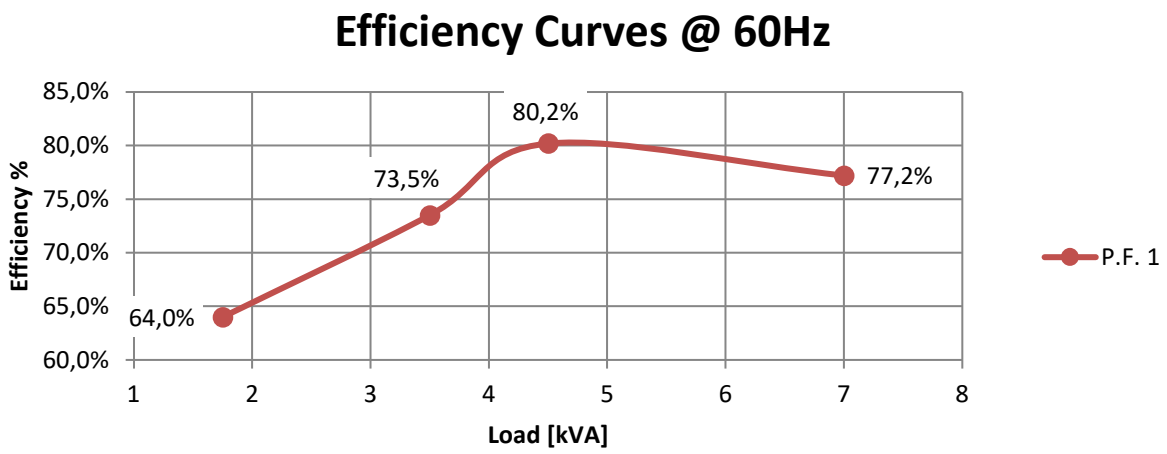

CPS18 XSA - 60Hz

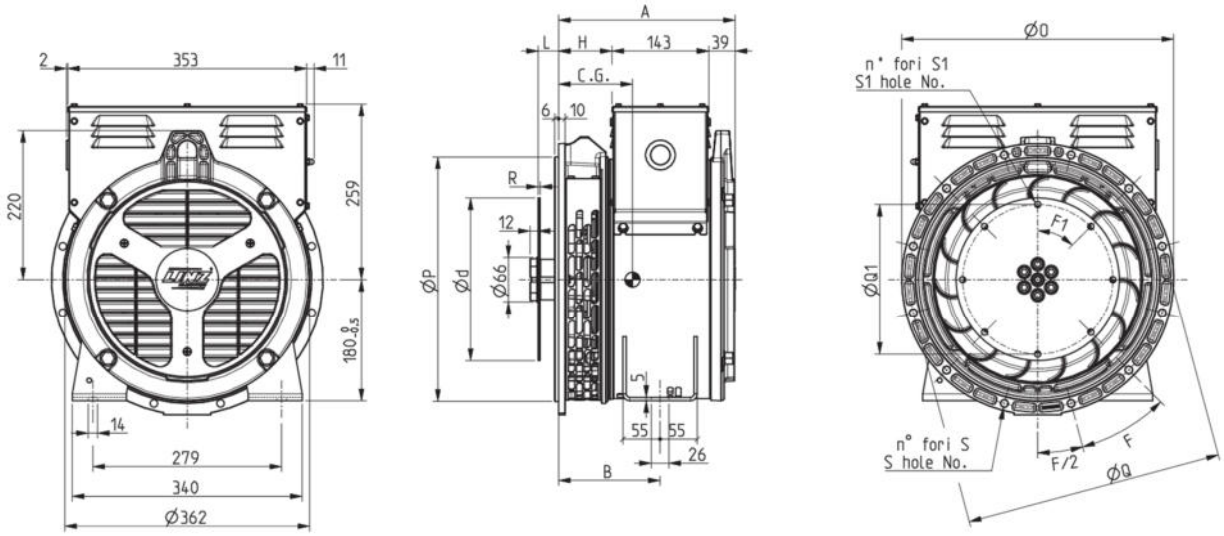

FORMA - FORM		A	B	H
SAE	CP 18XS	261	150	79
	CP 18S	276	165	94
	CP 18M	316	205	134

SAE N.	FLANGIE - FLANGES - BRIDAS					
	ØO	ØP	ØQ	n. fori holes No.	S	F
5	356	314,3	333,4	8	11	45°
4	402	362	381	12		30°

SAE N.	GIUNTI A DISCO - COUPLING DISCS - JUNTAS A DISCOS						
	L	Ød	ØQ1	n. fori holes No.	S1	F1	R
6 1/2	30,2	215,9	200	6	9	60°	3
7 1/2		241,3	222,25	8		45°	

TYPE	C.G.
CP 18XSA	125
CP 18SB	131
CP 18SC	132
CP 18MD	146
CP 18ME	147
CP 18MF	150