Operation

Marine Generator Sets

Models:

6EOD
4.5EFOD
8–32EOZD
6.5–27EFOZD

ISO 9001
KOHLER POWER SYSTEMS
NATIONALLY REGISTERED

KOHLER®
POWER SYSTEMS

TP-6252 2/08c

California Proposition 65

⚠ WARNING

Engine exhaust from this product contains chemicals known to the State of California to cause cancer, birth defects, or other reproductive harm.

Product Identification Information

Product identification numbers determine service parts. Record the product identification numbers in the spaces below immediately after unpacking the products so that the numbers are readily available for future reference. Record field-installed kit numbers after installing the kits.

Generator Set Identification Numbers

Record the product identification numbers from the generator set nameplate(s).

Model Designation _____

Specification Number _____

Serial Number _____

Accessory Number	Accessory Description

Engine Identification

Record the product identification information from the engine nameplate.

Manufacturer _____

Model Designation _____

Serial Number _____

x:in:007:001

Table of Contents

Product Identification Information 2

Safety Precautions and Instructions 5

Introduction 9

Service Assistance 10

Maintenance and Service Parts/Related Literature 11

Section 1 Service Views 13

Section 2 Operation 15

2.1 Prestart Checklist 15
2.2 Marine Inspection 16
2.3 Angular Operation 16
2.4 Operation in European Union Member Countries 16
2.5 Load Profile 16
2.6 Advanced Digital Control Operation 17
2.6.1 Controls and Indicators 17
2.6.2 Starting the Generator Set 18
2.6.3 Stopping the Generator Set 19
2.6.4 Fault Shutdowns 19
2.6.5 Resetting the Controller after a Fault Shutdown 21
2.6.6 Continuous Power Mode if Equipped with a Remote Gauge 21
2.7 Circuit Protection 22
2.7.1 Line Circuit Breaker 22
2.7.2 Fuses 22

Section 3 Scheduled Maintenance 23

3.1 General Maintenance 23
3.2 Service Schedule—6EOD and 4.5EFOD Models 24
3.3 Service Schedule—8EOZD and 6.5EFOZD Models 26
3.4 Service Schedule—9-32EOZD and 7-27EFOZD Models 28
3.5 Lubrication System 30
3.5.1 Oil Specifications 30
3.5.2 Oil Check 30
3.5.3 Oil Change 31
3.6 Fuel System 32
3.6.1 Fuel Specifications 32
3.6.2 Fuel Filter 32
3.6.3 Bleeding the Fuel System 33
3.7 Air Intake Silencer/Cleaner 34
3.8 Exhaust System 35
3.9 Cooling System 36
3.9.1 Closed Heat Exchanger 36
3.9.2 Checking and Filling Coolant 36
3.9.3 Flushing and Cleaning 36
3.9.4 Pressure Cap 37
3.9.5 Seawater Pump 37
3.9.6 Siphon Break 38
3.9.7 Anticorrosion Zinc Anode 40
3.10 Belt Tension 41
3.10.1 Seawater Pump Belt Tensioning Procedure, If Equipped 41
3.10.2 Battery Charging Alternator Belt Tensioning Procedure 41
3.11 Battery 42
3.12 Generator Storage Procedure 42

Section 4 Troubleshooting 43
4.1 Fault Codes 43
4.2 Controller Troubleshooting 43
Section 5 Wiring Diagrams 47
5.1 Wiring Diagram Reference 47
Appendix A Abbreviations 55
Appendix B Operating Hour Service Log 57

IMPORTANT SAFETY INSTRUCTIONS. Electromechanical equipment, including generator sets, transfer switches, switchgear, and accessories, can cause bodily harm and pose life-threatening danger when improperly installed, operated, or maintained. To prevent accidents be aware of potential dangers and act safely. Read and follow all safety precautions and instructions. SAVE THESE INSTRUCTIONS.

This manual has several types of safety precautions and instructions: Danger, Warning, Caution, and Notice.

DANGER

Danger indicates the presence of a hazard that ***will cause severe personal injury, death***, or ***substantial property damage***.

WARNING

Warning indicates the presence of a hazard that ***can cause severe personal injury, death,*** or ***substantial property damage***.

CAUTION

Caution indicates the presence of a hazard that ***will*** or ***can cause minor personal injury*** or ***property damage***.

NOTICE

Notice communicates installation, operation, or maintenance information that is safety related but not hazard related.

Safety decals affixed to the equipment in prominent places alert the operator or service technician to potential hazards and explain how to act safely. The decals are shown throughout this publication to improve operator recognition. Replace missing or damaged decals.

Accidental Starting

WARNING

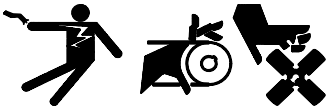

Accidental starting.
Can cause severe injury or death.

Disconnect the battery cables before working on the generator set. Remove the negative (-) lead first when disconnecting the battery. Reconnect the negative (-) lead last when reconnecting the battery.

Disabling the generator set. Accidental starting can cause severe injury or death. Before working on the generator set or connected equipment, disable the generator set as follows: (1) Move the generator set master switch to the OFF position. (2) Disconnect the power to the battery charger. (3) Remove the battery cables, negative (-) lead first. Reconnect the negative (-) lead last when reconnecting the battery. Follow these precautions to prevent starting of the generator set by an automatic transfer switch, remote start/stop switch, or engine start command from a remote computer.

Engine Backfire/Flash Fire

WARNING

Fire.
Can cause severe injury or death.

Do not smoke or permit flames or sparks near fuels or the fuel system.

Servicing the fuel system. A flash fire can cause severe injury or death. Do not smoke or permit flames or sparks near the fuel injection system, fuel line, fuel filter, fuel pump, or other potential sources of spilled fuels or fuel vapors. Catch fuels in an approved container when removing the fuel line or fuel system.

Servicing the air cleaner. A sudden backfire can cause severe injury or death. Do not operate the generator set with the air cleaner/silencer removed.

Combustible materials. A sudden flash fire can cause severe injury or death. Do not smoke or permit flames or sparks near the generator set. Keep the compartment and the generator set clean and free of debris to minimize the risk of fire. Catch fuels in an approved container. Wipe up spilled fuels and engine oil.

Combustible materials. A fire can cause severe injury or death. Generator set engine fuels and fuel vapors are flammable and explosive. Handle these materials carefully to minimize the risk of fire or explosion. Equip the compartment or nearby area with a fully charged fire extinguisher. Select a fire extinguisher rated ABC or BC for electrical fires or as recommended by the local fire code or an authorized agency. Train all personnel on fire extinguisher operation and fire prevention procedures.

Exhaust System

⚠ WARNING

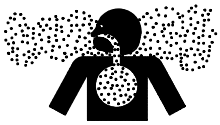

Carbon monoxide.
Can cause severe nausea, fainting, or death.

The exhaust system must be leakproof and routinely inspected.

Carbon monoxide symptoms. Carbon monoxide can cause severe nausea, fainting, or death. Carbon monoxide is a poisonous gas present in exhaust gases. Carbon monoxide is an odorless, colorless, tasteless, nonirritating gas that can cause death if inhaled for even a short time. Carbon monoxide poisoning symptoms include but are not limited to the following:

- Light-headedness, dizziness
- Physical fatigue, weakness in joints and muscles
- Sleepiness, mental fatigue, inability to concentrate or speak clearly, blurred vision
- Stomachache, vomiting, nausea

If experiencing any of these symptoms and carbon monoxide poisoning is possible, seek fresh air immediately and remain active. Do not sit, lie down, or fall asleep. Alert others to the possibility of carbon monoxide poisoning. Seek medical attention if the condition of affected persons does not improve within minutes of breathing fresh air.

Inspecting the exhaust system. Carbon monoxide can cause severe nausea, fainting, or death. For the safety of the craft's occupants, install a carbon monoxide detector. Never operate the generator set without a functioning carbon monoxide detector. Inspect the detector before each generator set use.

Operating the generator set. Carbon monoxide can cause severe nausea, fainting, or death. Be especially careful if operating the generator set when moored or anchored under calm conditions because gases may accumulate. If operating the generator set dockside, moor the craft so that the exhaust discharges on the lee side (the side sheltered from the wind). Always be aware of others, making sure your exhaust is directed away from other boats and buildings.

Fuel System

⚠ WARNING

Explosive fuel vapors.
Can cause severe injury or death.

Use extreme care when handling, storing, and using fuels.

The fuel system. Explosive fuel vapors can cause severe injury or death. Vaporized fuels are highly explosive. Use extreme care when handling and storing fuels. Store fuels in a well-ventilated area away from spark-producing equipment and out of the reach of children. Never add fuel to the tank while the engine is running because spilled fuel may ignite on contact with hot parts or from sparks. Do not smoke or permit flames or sparks to occur near sources of spilled fuel or fuel vapors. Keep the fuel lines and connections tight and in good condition. Do not replace flexible fuel lines with rigid lines. Use flexible sections to avoid fuel line breakage caused by vibration. Do not operate the generator set in the presence of fuel leaks, fuel accumulation, or sparks. Repair fuel systems before resuming generator set operation.

Draining the fuel system. Explosive fuel vapors can cause severe injury or death. Spilled fuel can cause an explosion. Use a container to catch fuel when draining the fuel system. Wipe up spilled fuel after draining the system.

Hazardous Noise

⚠ CAUTION

Hazardous noise.
Can cause hearing loss.

Never operate the generator set without a muffler or with a faulty exhaust system.

Hazardous Voltage/ Moving Parts

⚠ WARNING

Hazardous voltage. Moving parts.
Can cause severe injury or death.

Operate the generator set only when all guards and electrical enclosures are in place.

Servicing the generator set when it is operating. Exposed moving parts can cause severe injury or death. Keep hands, feet, hair, clothing, and test leads away from the belts and pulleys when the generator set is running. Replace guards, screens, and covers before operating the generator set.

Grounding electrical equipment. Hazardous voltage can cause severe injury or death. Electrocution is possible whenever electricity is present. Ensure you comply with all applicable codes and standards. Electrically ground the generator set, transfer switch, and related equipment and electrical circuits. Turn off the main circuit breakers of all power sources before servicing the equipment. Never contact electrical leads or appliances when standing in water or on wet ground because these conditions increase the risk of electrocution.

Disconnecting the electrical load. Hazardous voltage can cause severe injury or death. Disconnect the generator set from the load by turning off the line circuit breaker or by disconnecting the generator set output leads from the transfer switch and heavily taping the ends of the leads. High voltage transferred to the load during testing may cause personal injury and equipment damage. Do not use the safeguard circuit breaker in place of the line circuit breaker. The safeguard circuit breaker does not disconnect the generator set from the load.

Short circuits. Hazardous voltage/current can cause severe injury or death. Short circuits can cause bodily injury and/or equipment damage**.** Do not contact electrical connections with tools or jewelry while making adjustments or repairs. Remove all jewelry before servicing the equipment.

Electrical backfeed to the utility. Hazardous backfeed voltage can cause severe injury or death. Connect the generator set to the building/marina electrical system only through an approved device and after the building/marina main switch is turned off. Backfeed connections can cause severe injury or death to utility personnel working on power lines and/or personnel near the work area. Some states and localities prohibit unauthorized connection to the utility electrical system. Install a ship-to-shore transfer switch to prevent interconnection of the generator set power and shore power.

Testing live electrical circuits. Hazardous voltage or current can cause severe injury or death. Have trained and qualified personnel take diagnostic measurements of live circuits. Use adequately rated test equipment with electrically insulated probes and follow the instructions of the test equipment manufacturer when performing voltage tests. Observe the following precautions when performing voltage tests: (1) Remove all jewelry. (2) Stand on a dry, approved electrically insulated mat. (3) Do not touch the enclosure or components inside the enclosure. (4) Be prepared for the system to operate automatically.
(600 volts and under)

Hot Parts

⚠ WARNING

Hot coolant and steam.
Can cause severe injury or death.

Before removing the pressure cap, stop the generator set and allow it to cool. Then loosen the pressure cap to relieve pressure.

Notice

NOTICE

Fuse replacement. Replace fuses with fuses of the same ampere rating and type (for example: 3AB or 314, ceramic). Do not substitute clear glass-type fuses for ceramic fuses. Refer to the wiring diagram when the ampere rating is unknown or questionable.

NOTICE

Saltwater damage. Saltwater quickly deteriorates metals. Wipe up saltwater on and around the generator set and remove salt deposits from metal surfaces.

Notes

This manual provides operation instructions for 6EOD, 4.5EFOD, 8-32EOZD, and 6.5-27EFOZD model generator sets.

Refer to the engine operation manual for generator set engine scheduled maintenance information.

Information in this publication represents data available at the time of print. Kohler Co. reserves the right to change this publication and the products represented without notice and without any obligation or liability whatsoever.

Read this manual and carefully follow all procedures and safety precautions to ensure proper equipment operation and to avoid bodily injury. Read and follow the Safety Precautions and Instructions section at the beginning of this manual. Keep this manual with the equipment for future reference.

The generator set specification sheets provide specific generator and engine information. Refer to the spec sheet for data not supplied in this manual. Consult the generator set service manual, engine operation manual, and engine service manual for additional specifications. Obtain copies of the latest spec sheets, manuals, diagrams, and drawings from your local distributor/dealer.

The equipment service requirements are very important to safe and efficient operation. Inspect the parts often and perform required service at the prescribed intervals. Obtain service from an authorized service distributor/dealer to keep equipment in top condition.

Before installing a marine generator set, obtain the most current installation manual from your local distributor/dealer. Only qualified persons should install the generator set.

Service Assistance

For professional advice on generator set power requirements and conscientious service, please contact your nearest Kohler distributor or dealer.

- Consult the Yellow Pages under the heading Generators—Electric.
- Visit the Kohler Power Systems website at KohlerPower.com.
- Look at the labels and stickers on your Kohler product or review the appropriate literature or documents included with the product.
- Call toll free in the US and Canada 1-800-544-2444.
- Outside the US and Canada, call the nearest regional office.

Headquarters Europe, Middle East, Africa (EMEA)
Kohler Power Systems
3 rue de Brennus
93200 Saint Denis
France
Phone: (33) 1 49 178300
Fax: (33) 1 49 178301

Asia Pacific
Power Systems Asia Pacific Regional Office
Singapore, Republic of Singapore
Phone: (65) 6264-6422
Fax: (65) 6264-6455

China
North China Regional Office, Beijing
Phone: (86) 10 6518 7950
(86) 10 6518 7951
(86) 10 6518 7952
Fax: (86) 10 6518 7955

East China Regional Office, Shanghai
Phone: (86) 21 6288 0500
Fax: (86) 21 6288 0550

India, Bangladesh, Sri Lanka
India Regional Office
Bangalore, India
Phone: (91) 80 3366208
(91) 80 3366231
Fax: (91) 80 3315972

Japan, Korea
North Asia Regional Office
Tokyo, Japan
Phone: (813) 3440-4515
Fax: (813) 3440-2727

Latin America
Latin America Regional Office
Lakeland, Florida, USA
Phone: (863) 619-7568
Fax: (863) 701-7131

Maintenance and Service Parts

Figure 1 identifies maintenance and service parts for your generator set. Obtain a complete list of maintenance and service parts from your authorized generator distributor/dealer.

Part Description	Models						
	6EOD and 4.5EFOD	8EOZD and 6.5EFOZD	9EOZD and 7EFOZD	10EOZD and 9EFOZD	13EOZD/ 20EOZD and 11EFOZD/ 17EFOZD/ 17.5EFOZD	14EOZD/ 15.5EOZD/ 23EOZD/ 24EOZD and 11.5EFOZD/ 13EFOZD/ 20EFOZD	28EOZD/ 32EOZD and 23EFOZD/ 27EFOZD
Air Filter Element	278858	278858	278858	278858	GM24456	250902	GM16944
Fuse, Auxiliary Winding (F1) 10 amp	358337	358337	358337	358337	358337	358337	358337
Fuse, Relay Interface Board (F2) 10 amp	223316	223316	223316	223316	223316	223316	223316
Fuse, Controller (F3) 10 amp	223316	223316	223316	223316	223316	223316	223316
Fuel Filter Element	GM49315	229715	229715	GM32359	GM32359	GM32359	GM32359
Oil Filter	GM40999	229678	229678	252834	252834	252834	252834
Seawater Pump Impeller Kit	GM49316	229826	229826	229826	229955	229955	229826
V-Belt (Alternator)	GM40998	363064	GM47044	225428 (12 volt) 226929 (24 volt)	276148 (12 volt) 276141 (24 volt)	276148 (12 volt) 276141 (24 volt)	363205 (12 volt) 258955 (24 volt)
V-Belt (Seawater Pump)	N/A	GM13660	GM13660	229125	256503	256503	249989
Zinc Anode	N/A	267928	267928	267928	N/A	N/A	267928

Figure 1 Maintenance and Service Parts

x:in:001:004

List of Related Literature

Figure 2 identifies related literature available for the generator sets covered in this manual. Only trained and qualified personnel should install or service the generator set.

Literature Type	Models						
	6EOD and 4.5EFOD	**8EOZD and 6.5EFOZD**	**9EOZD and 7EFOZD**	**10EOZD and 9EFOZD**	**13–15.5EOZD and 11–13EFOZD**	**20–24EOZD and 17–20EFOZD**	**28/32EOZD and 23/27EFOZD**
Installation Manual	TP-6253						
Operation Manual	TP-6252						
Parts Catalog*	TP-6268	TP-6269	TP-6270	TP-6270	TP-6271	TP-6272	TP-6273
Service Manual (Engine)	TP-6436	TP-5876	TP-6382	TP-6293	TP-6293	TP-6293	TP-6293
Service Manual (Generator)	TP-6255						

* Includes generator and engine information.

Figure 2 Generator Set Literature

x:in:001:005

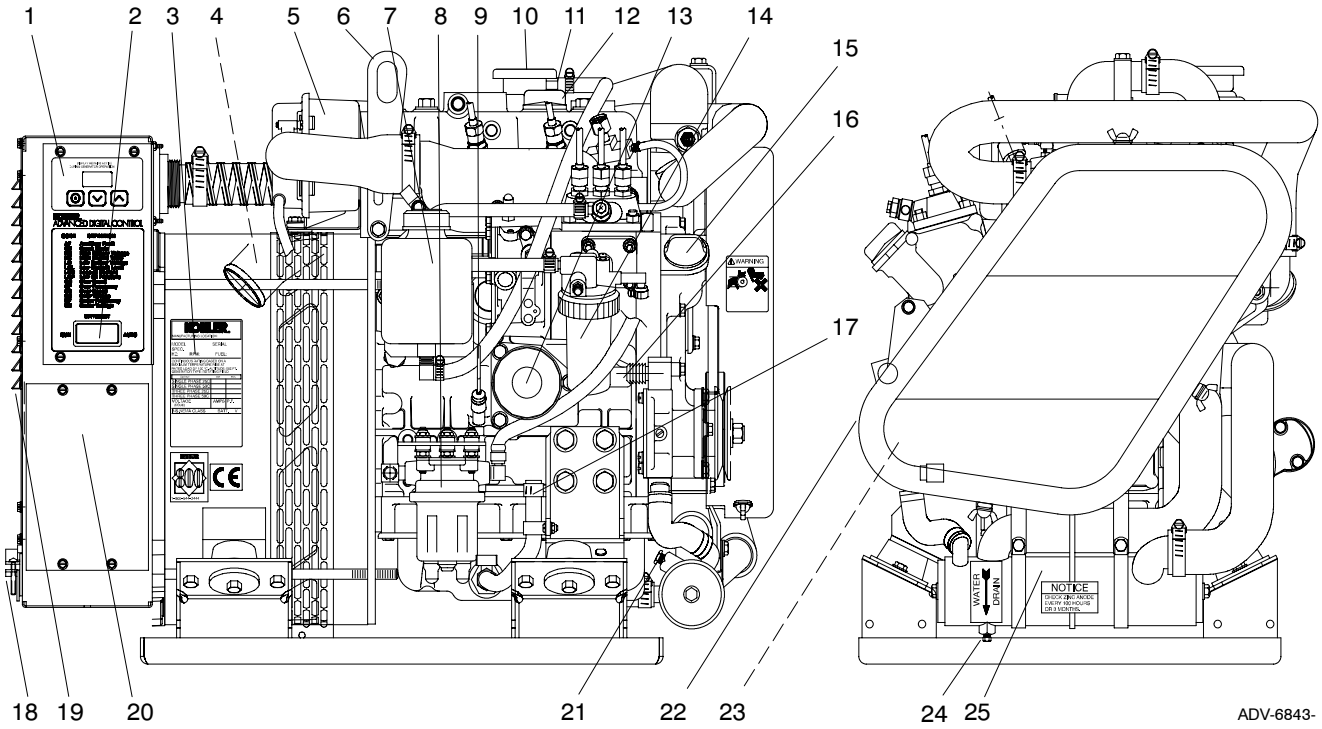

13-24EOZD & 11-20EFOZD Models
Non Service-Side View

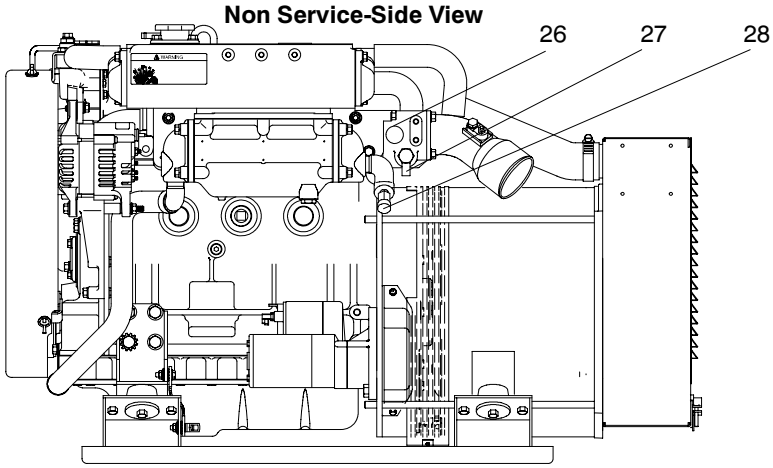

1. ADC 2100 Control
2. Run-Off/Reset-Auto switch
3. Nameplate
4. Mixing elbow (water outlet/exhaust outlet), far side
5. Air intake silencer/cleaner
6. Lifting eye
7. Coolant overflow bottle (location varies by model)
8. Fuel feed pump
9. Oil check/dipstick
10. Coolant pressure cap
11. Coolant overflow tube
12. Oil fill (engine top)
13. Lube oil filter
14. Fuel filter
15. Oil fill (front gear cover)
16. Seawater pump and water inlet
17. Oil drain valve and hose
18. Strain relief for the load lead cable
19. Alternator cooling air inlet
20. AC circuit breaker panel
21. Anticorrosion zinc anode (seawater drain) (all models except 13-24EOZD & 11-20EFOZD models)
22. Belt guard
23. V-belts
24. Engine coolant drain (all models except 13-24EOZD & 11-20EFOZD models)
25. Heat exchanger (all models except 13-24EOZD & 11-20EFOZD models)
26. Heat exchanger (13-24EOZD & 11-20EFOZD models, internal to exhaust manifold)
27. Seawater drain (13-24EOZD & 11-20EFOZD models)
28. Engine coolant drain (13-24EOZD & 11-20EFOZD models)

Figure 1-1 Service Views—Typical (8EOZD Model Shown Unless Noted)

Note: Consult installation drawings in the spec sheet or installation manual for fuel and battery connection points. Consult an authorized distributor/dealer or the service manual for items not shown.

⚠ WARNING

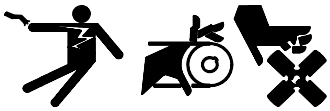

Accidental starting.
Can cause severe injury or death.

Disconnect the battery cables before working on the generator set. Remove the negative (–) lead first when disconnecting the battery. Reconnect the negative (–) lead last when reconnecting the battery.

Sound Shield Equipped Models: For access to the generator set to perform regular maintenance, remove the sound shield doors and roof.

Sound Shield Roof and Door Removal

1. Open the service-side door.
2. Release the two quarter-turn fasteners located underneath the roof. See Figure 1-2.
3. Lift up the roof.
4. Slide the roof towards the service side of the unit for removal.
5. Open the front, rear, and non-service side doors as needed.

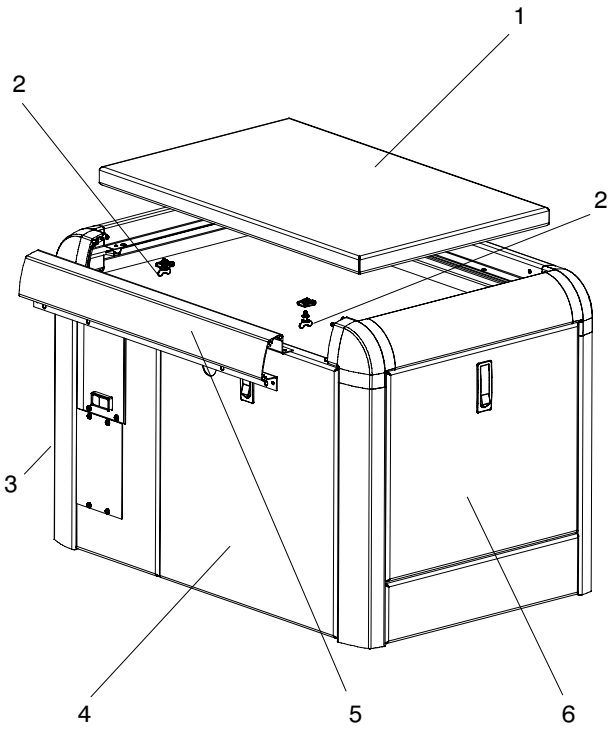

1. Sound shield roof
2. Quarter-turn fastener
3. Alternator-end door
4. Service-side door
5. Front rail
6. Engine-end door

Figure 1-2 Sound Shield Roof Removal

2.1 Prestart Checklist

⚠ WARNING

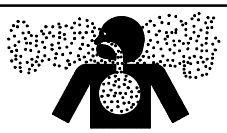

Carbon monoxide.
Can cause severe nausea, fainting, or death.

The exhaust system must be leakproof and routinely inspected.

Operating the generator set. Carbon monoxide can cause severe nausea, fainting, or death. Be especially careful if operating the generator set when moored or anchored under calm conditions because gases may accumulate. If operating the generator set dockside, moor the craft so that the exhaust discharges on the lee side (the side sheltered from the wind). Always be aware of others, making sure your exhaust is directed away from other boats and buildings.

To ensure continued satisfactory operation perform the following checks or inspections before or at each startup, as designated, and at the intervals specified in the service schedule. In addition, some checks require verification after the unit starts.

Air Cleaner. Check for a clean and installed air cleaner element to prevent unfiltered air from entering the engine.

Air Inlets. Check for clean and unobstructed air inlets.

Battery. Check for tight battery connections. Consult the battery manufacturer's instructions regarding battery care and maintenance.

Coolant Level. Check the coolant level according to the cooling system maintenance information.

Drive Belts. Check the belt condition and tension of the water pump and battery charging alternator belt(s).

Exhaust System. Check for exhaust leaks and blockages. Check the silencer and piping condition and check for tight exhaust system connections.

Inspect the the exhaust system components (exhaust manifold, mixing elbow, exhaust line, hose clamps, silencer, and outlet flapper) for cracks, leaks, and corrosion.

- Check the hoses for softness, cracks, leaks, or dents. Replace the hoses as needed.
- Check for corroded or broken metal parts and replace them as needed.
- Check for loose, corroded, or missing clamps. Tighten or replace the hose clamps and/or hangers as needed.
- Check that the exhaust outlet is unobstructed.
- Visually inspect for exhaust leaks *(blowby)*. Check for carbon or soot residue on exhaust components. Carbon and soot residue indicates an exhaust leak. Seal leaks as needed.
- Ensure that the carbon monoxide detector(s) is (1) in the craft, (2) functional, and (3) energized whenever the generator set operates.

For your safety: Never operate the generator set without a functioning carbon monoxide detector(s) for your safety and the safety of others on your vessel.

Fuel Level. Check the fuel level and keep the tank(s) full to ensure adequate fuel supply.

Oil Level. Maintain the oil level at or near, not over, the full mark on the dipstick.

Operating Area. Check for obstructions that could block the flow of cooling air. Keep the air intake area clean. Do not leave rags, tools, or debris on or near the generator set.

Seawater Pump Priming. Prime the seawater pump before initial startup. To prime the pump: (1) close the seacock, (2) remove the hose from the seawater-filter outlet, (3) fill the hose and seawater pump with clean water, (4) reconnect the hose to the water filter outlet, and (5) open the seacock. Confirm seawater pump operation on startup as indicated by water discharge from the exhaust outlet.

2.2 Marine Inspection

Kohler Co. recommends that all boat owners have their vessels inspected at the start of each boating season by the US Coast Guard, the local Coast Guard Auxiliary, or local state agency.

Kohler Co. also recommends having the generator's exhaust system inspected at the start of each boating season by an authorized Kohler® distributor/dealer. Repair any problems identified before operating the generator set.

⚠ WARNING

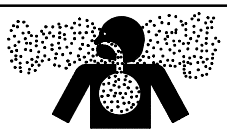

Carbon monoxide.
Can cause severe nausea, fainting, or death.

The exhaust system must be leakproof and routinely inspected.

2.3 Angular Operation

See Figure 2-1 for angular operation limits.

Continuous	Intermittent— 3 minutes or less
25°	30°
Maximum value for all directions	

Figure 2-1 Angular Operation

2.4 Operation in European Union Member Countries

This generator set is specifically intended and approved for operation below the deck in the engine compartment. Operation above the deck and/or outdoors would constitute a violation of European Union Directive 2000/14/EC noise emission standard.

2.5 Load Profile

Whenever operating the generator set, Kohler Co. recommends maintaining the minimum load profile indicated in Figure 2-1. Maintaining the load profile prevents corrosion formation on internal engine components when they're exposed to the breakdown of exhaust gases. Extended light loading may result in engine "wet stacking".

Minimum Load Requirement	Ideal Load Requirement
30% load	70% load or more

Figure 2-2 Load Profile

Wet Stacking occurs when water vapor condenses in the exhaust system. At normal combustion temperatures, water stays vaporized but at low combustion temperatures, it condenses back to a liquid. When running the generator set under normal loads (30% load or more), diesel exhaust stays hot enough to prevent water vapor from condensing. At low load situations, wet stacking can occur.

The operator should perform all of the prestart checks. Start the generator set according to the starting procedure in the controller section of this manual. While the generator set is operating, listen for a smooth-running engine and visually inspect the generator set for fluid or exhaust leaks.

2.6 Advanced Digital Control Operation

Figure 2-3 illustrates the user interface on the Advanced Digital Control (ADC 2100).

Note: Have setup and adjustments of the ADC 2100 performed only by an authorized Kohler distributor/dealer. The setup and adjustments are password protected.

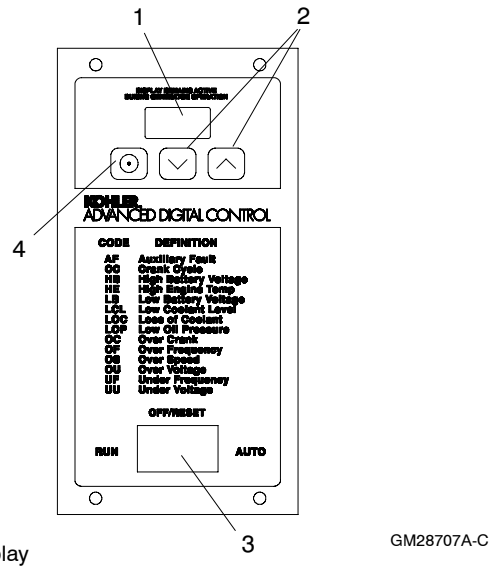

1. LED display
2. Up and down arrow buttons (use for setup and adjustment only)
3. Generator set master switch
4. Select button (use for setup and adjustment only)

Figure 2-3 ADC 2100 Control

2.6.1 Controls and Indicators

Figure 2-4 describes the controls and indicators located on the controller. The LED display indicates generator set status as shown in Figure 2-4. The display is active when the master switch is in the RUN or AUTO position and remains active until the generator set master switch is moved to the OFF/RESET position or the power to the controller is removed.

The buttons on the controller keypad are used only for system configuration and adjustment. The controller is factory-set and should not require configuration or adjustment under normal operating conditions. If the generator set is reconnected to a different voltage and/or frequency, refer to an authorized Kohler distributor/dealer for system configuration and adjustment instructions.

Control or Indicator	Item	Description
LED display	Runtime hours	Displays total generator set runtime hours.
	Crank indication	Displays CC_1, CC_2, or CC_3 to indicate the first, second or third attempt to start the engine. The last digit flashes during the crank cycle rest periods.
	Fault codes	Flashes a 2- or 3-letter fault code to indicate various fault conditions. See Section 2.6.4.
	Software version	See TP-6253, Generator Set Installation Manual.
Keypad	Select and arrow buttons	The keypad is used for controller setup and adjustment only. Have setup and adjustments performed only by an authorized distributor/dealer. The setup and adjustment functions are password-protected.
Generator set master switch	Three-position switch	Switch functions as the generator set operation and controller reset switch.

Figure 2-4 ADC 2100 Controls and Indicators

2.6.2 Starting the Generator Set

⚠ WARNING

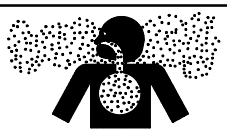

Carbon monoxide.
Can cause severe nausea, fainting, or death.

The exhaust system must be leakproof and routinely inspected.

Operating the generator set. Carbon monoxide can cause severe nausea, fainting, or death. Be especially careful if operating the generator set when moored or anchored under calm conditions because gases may accumulate. If operating the generator set dockside, moor the craft so that the exhaust discharges on the lee side (the side sheltered from the wind). Always be aware of others, making sure your exhaust is directed away from other boats and buildings.

Note: Opening the seacock. Before starting the generator set, open the seacock to allow cooling water passage. Failure to do so could damage the seawater pump impeller and cause serious engine overheating damage.

Note: Transfer switch. Check that the marine ship-to-shore transfer switch, if equipped, is in the ship position.

Note: If the generator set does not start after 3 crank attempts (an overcrank fault occurs):
1) Close the seacock.
2) Completely drain the water from the exhaust system at the silencer's drain plug.
3) Do not attempt generator set restart.
4) Contact an authorized Kohler® distributor/dealer.
A water-filled exhaust piping and silencer may further hinder generator starting and cause seawater entry into the engine cylinders through the exhaust valves. Water ingested into the engine may cause major engine damage that the Kohler Co. warranty does not cover.

The following procedures describe the actions required to start the generator set.

The controller attempts to start the generator set three times. If the generator set does not start in three attempts, the system shuts down on an overcrank fault.

Local Starting.

Move the generator set master switch to the RUN position. The ADC 2100 attempts to start the generator set in three crank cycles (crank cycle time is pre-programmed).

Auto (Automatic) Starting.

Move the generator set master switch to the AUTO position to allow startup by the ATS, remote start/stop switch or remote digital gauge. A remote start/stop switch or digital gauge can be connected to the customer interface connection (P21 connector, leads 3 and 4). See the wiring diagram in Section 5.

Note: The ADC 2100 allows three crank cycle attempts before the overcrank shutdown occurs.

2.6.3 Stopping the Generator Set

The following procedures describe the actions required to stop the generator set.

Local Stopping.

1. Run the generator set at no load for at least 2 minutes to ensure adequate engine cooldown.

2. Move the generator set master switch to the OFF/RESET position. The engine stops.

Auto (Automatic) Stopping.

1. Run the generator set at no load for at least 2 minutes to ensure adequate engine cooldown.

2. With the generator set master switch in the AUTO position, the generator set stops when the remote start/stop switch contacts close momentarily.

Note: If the ADC 2100 is configured for a CAN gauge, the controller will not power down (if the master switch is in the AUTO position). See Section 2.6.6.

Note: If the ADC 2100 is not configured for a CAN gauge, the controller will power down after 48 hours (if the master switch is in the AUTO position). If the generator has been started, the controller will power down 48 hours after the generator stops.

2.6.4 Fault Shutdowns

The generator set shuts down automatically under the fault conditions listed in Figure 2-5 and the controller displays a fault code. The generator set cannot be restarted until the fault condition is corrected and the controller is reset. See Section 2.6.5 to reset the controller after a fault shutdown. The controller resets automatically after a battery voltage fault condition is corrected.

Shutdown switches on the generator set automatically reset when the problem is corrected. The high engine temperature switch automatically resets when the generator set cools. However, the fault does not clear until the controller is reset.

The controller displays a fault code but the generator set does not shut down under the conditions shown in Figure 2-6.

Code	Fault	Description	Check
AF	Auxiliary fault input shutdown	Input from a customer-supplied switch that closes when the fault is active. Shutdown occurs 0.3 seconds after the fault is detected and will not start when the fault is active (input is grounded). This protection becomes active 3 seconds after crank disconnect.	Check the cause of the auxiliary fault.
HE	High engine temperature shutdown	Shutdown occurs if the engine coolant temperature exceeds the maximum temperature for more than 5 seconds. This protection becomes active after the engine reaches the crank disconnect speed. **Note:** The high engine temperature shutdown functions only when the coolant level is in the operating range.	Check for a low engine coolant level.
LOC	Loss of coolant shutdown	Shutdown occurs 5 seconds after a loss of coolant condition is detected. This protection becomes active 10 seconds after the engine has reached its stated crank disconnect speed and remains active as long as the generator run command is active.	Check for a clogged seawater intake or sea strainer. Check for a damaged seawater pump impeller.
LOP	Low oil pressure shutdown	Shutdown occurs if a low oil pressure condition exists for more than 5 seconds. This protection becomes active 30 seconds after the engine has reached crank disconnect speed (30 second inhibit). **Note:** The low oil pressure shutdown does not protect against low oil level. Check the oil level at the engine.	Check for leaks in the lubrication system. Check the oil level and add oil if the level is low.
OC	Overcrank shutdown	Shutdown occurs after 3 unsuccessful starting attempts. The crank cycle is set for three starting attempts.	Check the fuel supply and battery. If there is no output voltage, check the line circuit breaker. Also check for loose connections. Contact an authorized distributor/dealer for service.
OF	Overfrequency shutdown	Shutdown occurs when the governed frequency exceeds 110% of the system's frequency setpoint for more than 5 seconds. This protection becomes active 10 seconds after engine start (10 second inhibit).	Contact an authorized distributor/dealer for service if problem continues.
OS	Overspeed shutdown	Shutdown occurs if the engine speed exceeds 115% of the normal running speed for more than 0.3 seconds.	Contact an authorized distributor/dealer for service if problem continues.
OU	Overvoltage shutdown	Shutdown occurs if the voltage exceeds 120% of the voltage regulator setpoint for more than 2 seconds.	Contact an authorized distributor/dealer for service if problem continues.
UF	Underfrequency shutdown	Shutdown occurs when the governed frequency falls below 90% of the system's frequency setpoint for more than 5 seconds. This protection becomes active 10 seconds after engine start (10 second inhibit).	Reduce the load and restart the generator set. Contact an authorized distributor/dealer for service if problem continues.
UU	Undervoltage shutdown	Shutdown occurs if the voltage falls below 80% of the voltage regulator setpoint for more than 10 seconds.	Reduce the load and restart the generator set. Contact an authorized distributor/dealer for service if problem continues.
SCF0	Controller error	Indicates a software or communication problem within the ADC 2100.	Contact an authorized distributor/dealer for service if problem continues.

Figure 2-5 ADC 2100 Fault Shutdown Codes

Code	Fault	Description	Check
HB	High battery voltage warning	Fault code is displayed if the engine starting battery voltage rises above 16 VDC for a 12 VDC system or above 30 VDC for a 24 VDC system for more than 2 seconds when the engine is not running. This fault condition does not inhibit engine starting. The fault condition clears when the battery voltage returns to a voltage within the limits for more than 2 seconds.	Check the battery rating and condition.
LB	Low battery voltage warning	Fault code is displayed if the engine starting battery voltage falls below 9.5 VDC for a 12 VDC system or below 16 VDC for a 24 VDC system for more than 2 seconds when the engine is not running. This fault condition does not inhibit engine starting. The fault condition clears when the battery voltage returns to a voltage within the limits for more than 2 seconds.	Check the battery rating and condition. Charge or replace the battery.

Figure 2-6 ADC 2100 Fault Warning Codes

2.6.5 Resetting the Controller after a Fault Shutdown

Always identify and correct the cause of a fault shutdown before resetting the controller. Use the following procedure to reset the generator set controller after a fault shutdown.

1. Move the generator set master switch to the OFF/RESET position.
2. Disconnect the generator set from the load using the line circuit breaker or ATS. See the safety precautions at the beginning of this manual before proceeding.
3. Identify and correct the cause of the fault shutdown. See the safety precautions at the beginning of this manual before proceeding. Refer to Section 4, Troubleshooting.
4. Start the generator set by moving the generator set master switch to RUN. Test operate the generator set to verify that the cause of the shutdown has been corrected.
5. Shut the generator off by moving the generator set master switch to the OFF/RESET position.
6. Reconnect the generator set to the load using the line circuit breaker or ATS.
7. Move the generator set master switch to the AUTO position for startup by remote transfer switch, remote start/stop switch, or remote digital gauge.

   Note: The controller's LED display remains off until an engine start command is received.

Opening and closing the remote start/stop contact also resets the controller.

2.6.6 Continuous Power Mode if Equipped with a Remote Gauge

The controller is powered by the generator set engine starting battery.

Note: Remote communications require an active (powered-up) controller. Be advised that the ADC consumes 250 mA when the master switch is in the AUTO position. If you do not plan to use your generator set for a long period of time, Kohler recommends moving the master switch to the OFF/RESET position (complete power down, 0 mA draw).

A remote start signal (from a transfer switch or a remote start/stop switch connected to P21 connector, leads 3 and 4) or moving the generator set master switch to the RUN position turns the controller back on.

2.7 Circuit Protection

If the generator set circuit breaker trips or the fuses blow repeatedly, see Section 4, Troubleshooting, for possible causes.

2.7.1 Line Circuit Breaker

A line circuit breaker interrupts the generator output in the event of a fault in the wiring between the generator and the load. The line circuit breaker location is shown in Figure 1-1. If the circuit breaker trips, reduce the load and switch the breaker back to the ON position.

2.7.2 Fuses

The engine harness (or junction box for the 6EOD/4.5EFOD and 9EOZD/7EFOZD models) contains three 10-amp inline fuses. Always identify and correct the cause of a blown fuse before restarting the generator set. Refer to section 4, Troubleshooting, for conditions that may indicate a blown fuse. Obtain service from an authorized distributor/dealer.

Controller Fuse. A replaceable 10-amp fuse protects the controller circuitry. If the controller display is dark, check the battery and battery connections and then check the controller fuse. Replace the fuse if it is blown.

Relay Fuse. A replaceable 10-amp fuse protects the engine relays. If the generator set does not crank, check the battery and battery connections and then check the relay fuse. Replace the fuse if it is blown.

Auxiliary Winding Fuse. A replaceable 10-amp fuse protects the alternator.

Fuse	Label	Location (*)
Auxiliary Winding	F1	Lead 55
Relay Interface Board	F2	Lead PF2
Controller	F3	Lead PF1

* See Figure 2-8 for the fuse location on 6EOD/4.5EFOD models or See Figure 2-9 for the fuse location on 9EOZD/7EFOZD models.

Figure 2-7 Fuses

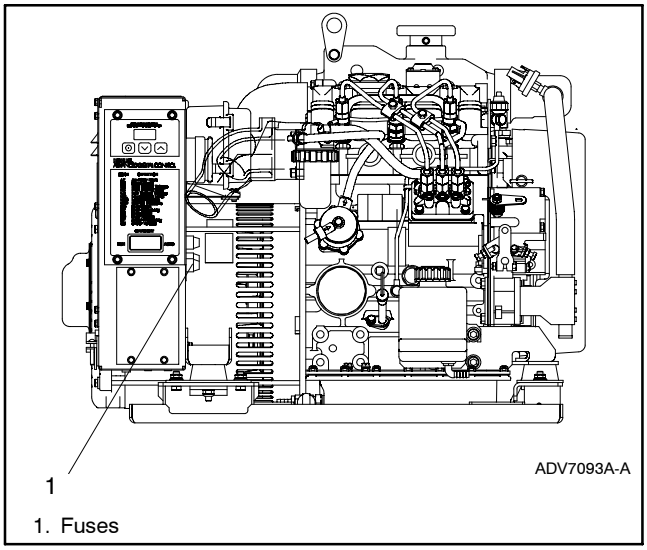

Figure 2-8 Fuse Location on 6EOD/4.5EFOD Model

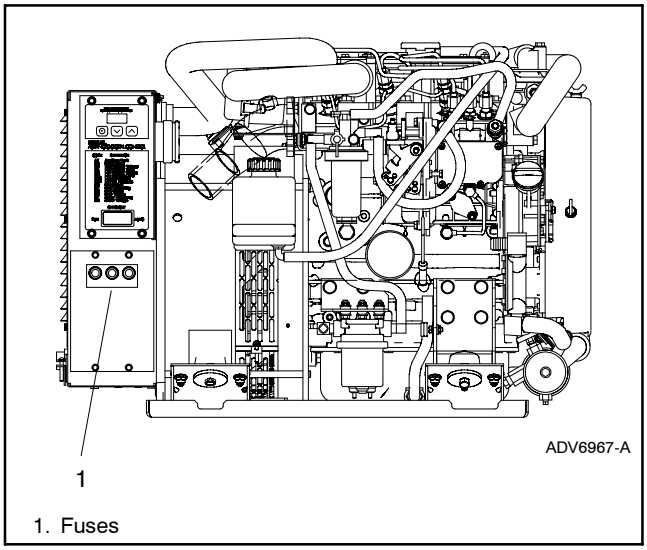

Figure 2-9 Fuse Location on 9EOZD/7EFOZD Model

3.1 General Maintenance

⚠ WARNING

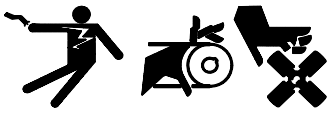

Accidental starting.
Can cause severe injury or death.

Disconnect the battery cables before working on the generator set. Remove the negative (-) lead first when disconnecting the battery. Reconnect the negative (-) lead last when reconnecting the battery.

Disabling the generator set. Accidental starting can cause severe injury or death. Before working on the generator set or connected equipment, disable the generator set as follows: (1) Move the generator set master switch to the OFF position. (2) Disconnect the power to the battery charger. (3) Remove the battery cables, negative (-) lead first. Reconnect the negative (-) lead last when reconnecting the battery. Follow these precautions to prevent starting of the generator set by an automatic transfer switch, remote start/stop switch, or engine start command from a remote computer.

⚠ WARNING

Hazardous voltage. Moving parts.
Can cause severe injury or death.

Operate the generator set only when all guards and electrical enclosures are in place.

Servicing the generator set when it is operating. Exposed moving parts can cause severe injury or death. Keep hands, feet, hair, clothing, and test leads away from the belts and pulleys when the generator set is running. Replace guards, screens, and covers before operating the generator set.

NOTICE

Saltwater damage. Saltwater quickly deteriorates metals. Wipe up saltwater on and around the generator set and remove salt deposits from metal surfaces.

NOTICE

The engine and generator set may use both American Standard and metric hardware. Use the correct size tools to prevent rounding of the bolt heads and nuts.

See the Safety Precautions and Instructions at the beginning of this manual before attempting to service, repair, or operate the generator set. Have an authorized distributor/dealer perform generator set service.

Engine Service. Perform generator set engine service at the intervals specified by the engine operation manual.

Generator Set Service. Perform generator set service at the intervals specified by the generator set operation manual.

If the generator set operates under dusty or dirty conditions, use *dry* compressed air to blow dust out of the alternator. With the generator set running, direct the stream of air in through the cooling slots at the alternator end.

Routine Maintenance. Refer to the following generator set service schedule, the engine service schedule, and the runtime hours shown on the ADC 2100 to determine when to schedule routine maintenance. Service more frequently generator sets that are subject to extreme weather or dusty or dirty conditions.

Service Log. Use the Operating Hour Service Log located in the back of this manual to document performed services.

Service Schedule. Perform maintenance on each item in the service schedule at the designated intervals for the life of the generator set. For example, an item requiring service every 100 hours or 3 months also requires service after 200 hours or 6 months, 300 hours or 9 months, and so on.

3.2 Service Schedule—6EOD and 4.5EFOD Models

Perform Service at Intervals Indicated (X)	Reference Section	Daily	Every 50 Hrs. or 1 Month	Every 250 Hrs. or 3 Months	Every 500 Hrs. or 6 Months	Every 1000 Hrs. or Yearly
FUEL SYSTEM						
Check the fuel level and fill as necessary	3.6	X (Before operation)				
Check for any unusual noise †		X (During operation)				
Remove the sediment from the fuel tank and drain the fuel tank †§			X			
Replace the fuel filter *	3.6.2				X	
Fuel/water separator draining *†		X				
Fuel/water separator cleaning *†					X	
Replace the fuel filter element *	3.6.2				X	
Fuel injection valve— Check the injection condition *†‡	Eng. S/M				X (300 hrs.)	
Fuel injection pump— Check the injection timing *†‡	Eng. S/M				X (500 hrs.)	
LUBRICATION SYSTEM						
Check the crankcase oil level and add oil as necessary	3.5.2	X (Before operation)				
Replace the oil in the crankcase *	3.5.3		X (Break-in period)	X		
Replace the lube oil filter element *	3.5.3		X (Break-in period)	X		
COOLING SYSTEM						
Check the coolant level and fill as necessary *	3.9.2	X (Before operation)				
Check the seawater outlet and clean as necessary	3.8	X				
Check the function of the siphon break, if equipped	3.9.6			X		
Check/replace the seawater pump impeller *†	3.9.5				X (Check)	X (Replace)
Replace the coolant *†	3.9.3					X

* Requires removal of the sound shield door, if installed

† Consult your local distributor/dealer for service

‡ Read the WARNING found at the beginning of the manual regarding moving parts

§ Consult the operating instructions supplied with the craft

Service Schedule—6EOD and 4.5EFOD Models, continued

Perform Service at Intervals Indicated (X)	Reference Section	Daily	Every 50 Hrs. or 1 Month	Every 250 Hrs. or 3 Months	Every 500 Hrs. or 6 Months	Every 1000 Hrs. or Yearly
INTAKE/EXHAUST SYSTEM						
Inspect the exhaust system components *†	3.8	X (Before operation)				
Check the exhaust gas condition. If the exhaust is blue or black, contact your local distributor/dealer	3.8	X (During operation)				
Clean the air cleaner element *	3.7				X	
Inspect and/or replace the intake silencer element *	3.7					X
Clean the exhaust/water mixing elbow *†	3.8				X	
Check the breather pipe for obstructions *†					X	
Inspect the complete exhaust system †	2.2					X
ELECTRICAL SYSTEM						
Keep the battery charged and in good condition §	3.11	X (Before operation)				
Inspect and adjust the alternator driving belt tension *	3.10.2			X		
Replace the alternator driving belt tension *	3.10.2					X
Check and tighten the electrical connections *			X			
Clean the battery cables †						X
ENGINE AND MOUNTING						
Check for water, fuel, coolant, and oil leakage *†‡		X (After operation)				
Inspect and/or replace hoses and clamps *†‡						X
Retighten any loose nuts and bolts *		X (Before operation)				
Check the mounting bolts/vibromounts and tighten if necessary *					X	
Adjust the intake/exhaust valve clearance *†					X	
Check the compartment condition (fuel, oil, or water leaks)		X (Before operation)				
Inspect and/or adjust engine valve lash						X
REMOTE START PANEL						
Check the remote start panel operation, if equipped			X (Break-in period)			X
GENERATOR						
Test run the generator set			X (Weekly)			
Blow dust out of the generator *†	3.1					X
Clean the slip rings and inspect the brushes *†	Gen S/M					X

* Requires removal of the sound shield door, if installed

† Consult your local distributor/dealer for service

‡ Read the WARNING found at the beginning of the manual regarding moving parts

§ Consult the battery manufacturer's instructions

3.3 Service Schedule—8EOZD and 6.5EFOZD Models

Perform Service at Intervals Indicated (X)	Reference Section	Daily	Every 50 Hrs. or 1 Month	Every 200 Hrs. or 3 Months	Every 400 Hrs. or 6 Months	Every 1000 Hrs. or Yearly
FUEL SYSTEM						
Check the fuel level and fill as necessary	3.6	X (Before operation)				
Check for any unusual noise †		X (During operation)				
Remove the sediment from the fuel tank and drain the fuel tank †§				X		
Clean the fuel filter *	3.6.2			X		
Fuel/water separator draining *†			X			
Fuel/water separator cleaning *†					X	
Replace the fuel filter element *	3.6.2				X	
Fuel injection valve— Check the injection condition *†‡	Eng. S/M				X (300 hrs.)	
Fuel injection pump— Check the injection timing *†‡	Eng. S/M				X (500 hrs.)	
LUBRICATION SYSTEM						
Check the crankcase oil level and add oil as necessary	3.5.2	X (Before operation)				
Replace the oil in the crankcase *	3.5.3		X (Break-in period)	X (150 hrs.)		
Replace the lube oil filter element *	3.5.3		X (Break-in period)		X (300 hrs.)	
COOLING SYSTEM						
Check the coolant level and fill as necessary *	3.9.2	X (Before operation)				
Check the seawater outlet and clean as necessary	3.8	X				
Adjust the seawater pump belt tension *	3.10.1		X (Break-in period)	X		
Check the function of the siphon break, if equipped	3.9.6			X		
Check the heat exchanger anticorrosion zinc condition, if equipped *	3.9.7			X (100 hrs.)		
Check/replace the seawater pump impeller *†	3.9.5				X (Check)	X (Replace)
Replace the coolant *†	3.9.3					X
Replace the heat exchanger anticorrosion zinc anode, if equipped *†	3.9.7					X

* Requires removal of the sound shield door, if installed

† Consult your local distributor/dealer for service

‡ Read the WARNING found at the beginning of the manual regarding moving parts

§ Consult the operating instructions supplied with the craft

Service Schedule—8EOZD and 6.5EFOZD Models, continued

Perform Service at Intervals Indicated (X)	Reference Section	Daily	Every 50 Hrs. or 1 Month	Every 200 Hrs. or 3 Months	Every 400 Hrs. or 6 Months	Every 1000 Hrs. or Yearly
INTAKE/EXHAUST SYSTEM						
Inspect the exhaust system components *†	3.8	X (Before operation)				
Check the exhaust gas condition. If the exhaust is blue or black, contact your local distributor/dealer	3.8	X (During operation)				
Clean the air cleaner element *	3.7				X	
Replace the intake silencer element *	3.7					X
Clean the exhaust/water mixing elbow *†	3.8				X	
Check the breather pipe for obstructions *†					X	
Inspect the complete exhaust system †	2.2					X
ELECTRICAL SYSTEM						
Keep the battery charged and in good condition §	3.11	X (Before operation)				
Adjust the alternator driving belt tension *	3.10.2		X (Break-in period)	X		
Check and tighten the electrical connections *			X			
Clean the battery cables †						X
ENGINE AND MOUNTING						
Check for water, fuel, coolant, and oil leakage *†‡		X (After operation)				
Retighten any loose nuts and bolts *		X (Before operation)				
Check the mounting bolts/vibromounts and tighten if necessary *					X	
Adjust the intake/exhaust valve clearance *†	Eng. S/M				X	
Check the compartment condition (fuel, oil, or water leaks)		X (Before operation)				
REMOTE START PANEL						
Check the remote start panel operation, if equipped			X (Break-in period)			X
GENERATOR						
Test run the generator set			X (Weekly)			
Blow dust out of the generator *†	3.1					X

* Requires removal of the sound shield door, if installed

† Consult your local distributor/dealer for service

‡ Read the WARNING found at the beginning of the manual regarding moving parts

§ Consult the battery manufacturer's instructions

3.4 Service Schedule—9-32EOZD and 7-27EFOZD Models

Perform Service at Intervals Indicated (X)	Reference Section	Daily	Every 50 Hrs. or 1 Month	Every 250 Hrs. or 3 Months	Every 500 Hrs. or 6 Months	Every 1000 Hrs. or Yearly
FUEL SYSTEM						
Check the fuel level and fill as necessary	3.6	X (Before operation)				
Check for any unusual noise †		X (During operation)				
Remove the sediment from the fuel tank and drain the fuel tank †§			X			
Bleed the fuel system (if encountering hard starting)	3.6.3		X			
Replace the fuel filter element *	3.6.2				X	
Fuel/water separator draining *†			X			
Fuel/water separator cleaning *†					X	
Inspect the fuel injection nozzle pressure *†‡	Eng. S/M					X
Adjust the fuel injection timing *†‡	Eng. S/M					X (2000 hrs. or 2 yrs.)
Inspect and adjust the fuel injection pump *†‡	Eng. S/M					X (2000 hrs. or 2 yrs.)
LUBRICATION SYSTEM						
Check the crankcase oil level and add oil as necessary	3.5.2	X (Before operation)				
Replace the oil in the crankcase *	3.5.3		X (Break-in period)	X		
Replace the lube oil filter element *	3.5.3		X (Break-in period)	X		
COOLING SYSTEM						
Check the coolant level and fill as necessary *	3.9.2	X (Before operation)				
Check the seawater outlet and clean as necessary	3.8	X				
Check/adjust the seawater pump belt tension *	3.10.1		X (Break-in period)	X		
Check the function of the siphon break, if equipped	3.9.6			X		
Check the heat exchanger anticorrosion zinc condition, if equipped *	3.9.7			X (100 hrs.)		
Check/replace the seawater pump impeller *†	3.9.5				X (Check)	X (Replace)
Replace the coolant *†	3.9.3					X
Replace the heat exchanger anticorrosion zinc anode, if equipped *†	3.9.7					X

* Requires removal of the sound shield door, if installed
† Consult your local distributor/dealer for service
‡ Read the WARNING found at the beginning of the manual regarding moving parts
§ Consult the operating instructions supplied with the craft

Service Schedule—9-32EOZD and 7-27EFOZD Models, continued

Perform Service at Intervals Indicated (X)	Reference Section	Daily	Every 50 Hrs. or 1 Month	Every 250 Hrs. or 3 Months	Every 500 Hrs. or 6 Months	Every 1000 Hrs. or Yearly
INTAKE/EXHAUST SYSTEM						
Inspect the exhaust system components *†	3.8	X (Before operation)				
Check the exhaust gas condition. If the exhaust is blue or black, contact your local distributor/dealer	3.8	X (During operation)				
Clean the air cleaner element *	3.7			X		
Replace the air cleaner element *	3.7				X	
Clean the exhaust/water mixing elbow *†	3.8				X	
Check the breather pipe for obstructions *†					X	
Clean the turbocharger blower, if equipped *†						X
Inspect the complete exhaust system †	2.2					X
ELECTRICAL SYSTEM						
Keep the battery charged and in good condition §	3.11	X (Before operation)				
Check/adjust the alternator driving belt tension *	3.10.2		X (Break-in period)	X		
Check and tighten the electrical connections *			X			
Clean the battery cables †						X
ENGINE AND MOUNTING						
Check for water, fuel, coolant, and oil leakage *†‡		X (After operation)				
Retighten any loose nuts and bolts *		X (Before operation)				
Check the mounting bolts/vibromounts and tighten if necessary *					X	
Adjust the intake/exhaust valve clearance *†						X
Check the compartment condition (fuel, oil, or water leaks)		X (Before operation)				
REMOTE START PANEL						
Check the remote start panel operation, if equipped			X (Break-in period)			X
GENERATOR						
Test run the generator set			X (Weekly)			
Blow dust out of the generator *†	3.1					X

* Requires removal of the sound shield door, if installed

† Consult your local distributor/dealer for service

‡ Read the WARNING found at the beginning of the manual regarding moving parts

§ Consult the battery manufacturer's instructions

3.5 Lubrication System

See the Scheduled Maintenance section for oil change and oil filter replacement intervals. See Section 1 for the oil drain, oil check, oil fill, and oil filter locations.

x:sm:001:002:

3.5.1 Oil Specifications

Use oil that meets the American Petroleum Institute (API) classification of CD or CF. Using an unsuitable oil or neglecting an oil change may result in damage and a shorter engine life. Figure 3-1 shows the recommended Society of Automotive Engineers (SAE) viscosity designation for given operating temperature ranges.

Note: Failure to observe the oil specifications may cause inadequate lubrication/oil pressure and cold-starting difficulties.

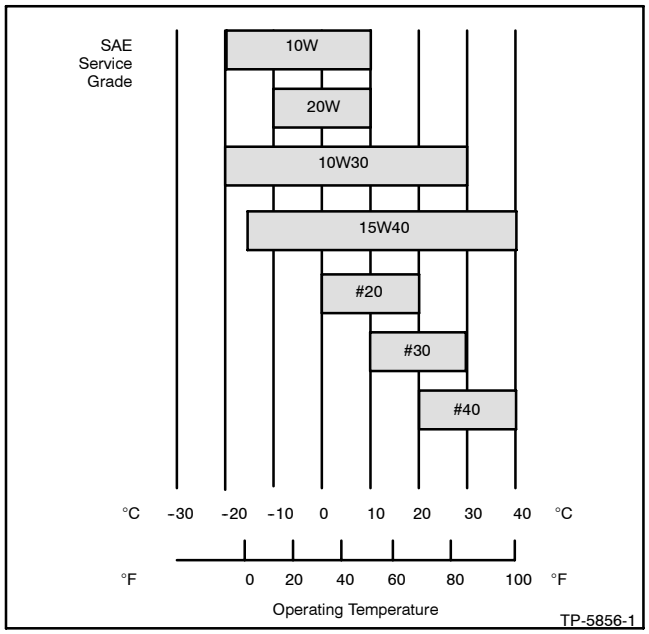

Figure 3-1 Engine Oil Selection for Models 8–32EOZD and 6.5–27EFOZD

Engine Oil Viscosity		
SAE Service Grade	Ambient Temperature	
	Minimum	Maximum
0W20	-40°C (-40°F)	10°C (50°F)
0W30	-40°C (-40°F)	30°C (86°F)
0W40	-40°C (-40°F)	40°C (104°F)
5W30	-30°C (-22°F)	30°C (86°F)
5W40	-30°C (-22°F)	40°C (104°F)
10W30	-20°C (-4°F)	40°C (104°F)
15W40	-10°C (14°F)	50°C (122°F)

Figure 3-2 Engine Oil Selection for Models 6EOD and 4.5EFOD

3.5.2 Oil Check

Check the oil level in the crankcase daily or before each startup to ensure that the level is in the safe range. To check the oil level, remove the dipstick and wipe the end clean, reinsert as far as possible, and remove. Maintain the oil level between the Min and Max marks on the dipstick, as shown in Figure 3-3. See Section 1 for dipstick location.

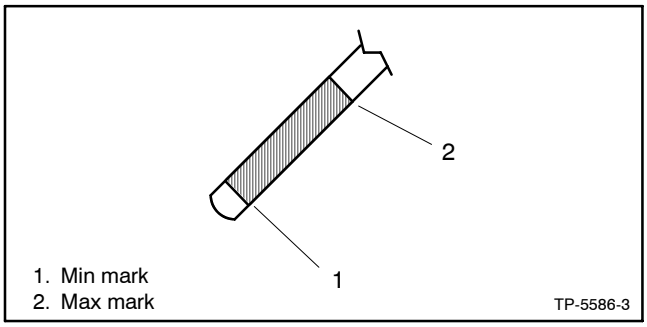

Figure 3-3 Oil Level Check Marks

Note: Do not operate the set if the oil level is below the Min mark or above the Max mark.

3.5.3 Oil Change

Change the oil more frequently if the generator operates under dirty, dusty conditions. See Figure 3-4 for oil capacities.

Model	L (Qts.)
6EOD and 4.5EFOD	3.1 (3.2)
8EOZD and 6.5EFOZD	2.3 (2.4)
9EOZD and 7EFOZD	3.6 (3.8)
10EOZD and 9EFOZD	3.6 (3.8)
13/14/15.5EOZD and 11/11.5/13EFOZD	4.7 (5.0)
20/23/24EOZD and 17/17.5/20EFOZD	5.8 (6.1)
28/32EOZD and 23/27EFOZD	10.2 (10.8)

Figure 3-4 Oil Capacities

Oil Change Procedure

Whenever possible, drain the oil while it is still warm.

1. **Drain the oil.**

   a. Place the generator set master switch in the OFF position.

   b. Disconnect the power to the battery charger, if equipped.

   c. Disconnect the generator set engine starting battery, negative (–) lead first.

   d. Remove the oil drain hose from its retaining clip. Remove the cap from the oil drain hose and lower the hose into an oil collection container.

   Electric Oil Drain/Oil Fill Pump Procedure: Connect the pump to the end of the oil drain hose. Place the outlet of the pump into an oil collection container. Remove the oil fill cap(s).

   e. Open the oil drain valve on the engine.

   f. Allow time for the engine oil to drain completely.

   Electric Oil Drain/Oil Fill Pump Procedure: Activate the pump until all of the oil is removed. Go to step 2.

   g. Close the oil drain valve.

   h. Replace the cap on the oil drain hose. Replace the oil drain hose in its retaining clip.

2. **Replace the oil filter.**

   a. Remove the oil filter by rotating it counterclockwise with an oil filter wrench.

   b. Apply a light coat of clean oil to the rubber seal of the new oil filter.

   c. Install the new oil filter following the instructions provided with the filter.

   Note: Dispose of all waste materials (engine oil, fuel, filter, etc.) in an environmentally safe manner.

3. **Fill with oil.** Add new oil of the weight, grade, and quantity specified in Section 3.5.

   Electric Oil Drain/Oil Fill Pump Procedure: Disconnect the pump. Close the oil drain valve. Replace the cap on the oil drain hose.

4. **Check for leaks.**

   a. Check that the generator set master switch is in the OFF position.

   b. Reconnect the generator set engine starting battery, negative (–) lead last.

   c. Reconnect the power to the battery charger, if equipped.

   d. Start the generator set and check for leaks around the oil filter.

   e. Stop the generator set and tighten the oil filter to stop any leaks.

x:sm:001:003:

3.6 Fuel System

3.6.1 Fuel Specifications

Use a clean, good quality diesel fuel oil with a cetane number of 45 or greater. Clean fuel prevents the diesel fuel injectors and pumps from clogging.

Fuel Recommendations	
United States	ISO 8217 DMA, BS 2869 A1 or A2
United Kingdom	BS 2869-1983, Part 2 Class A2
Germany	DIN 51 601-1978
Japan	JIS. No. K2204-2

Note: Never store diesel fuel in galvanized containers; diesel fuel and the galvanized coating react chemically to produce flaking that quickly clogs filters or causes fuel pump or injector failure.

Note: Avoid storing fuel for more than one month. Take special precautions to keep all dirt, water, and other contaminants out of fuel to prevent the growth of microbes. Microbes form slime that clogs the fuel filter and lines.

Note: Do not run the generator set out of fuel because the fuel lines will draw in air and necessitate bleeding the fuel system before restarting the unit.

3.6.2 Fuel Filter

The quality and condition of the fuel largely determine the filter's useful life. Replace the fuel filter element as listed in the service schedule. Section 1 shows the typical location of a fuel filter. Use the applicable procedure below to replace the fuel filter.

Fuel Filter Cleaning/Replacement Procedure

8-9EOZD and 6.5-7EFOZD Models:

1. Close the fuel supply valve.
2. Remove the collar from the fuel filter adapter while holding the filter bowl in place.
3. Remove the filter bowl and fuel filter. Clean the fuel filter with fresh diesel fuel and blow compressed air from the inside outward. Replace a damaged fuel filter. Dispose of the fuel filter in an approved manner.
4. Wipe off all parts with a clean rag. Inspect all mating surfaces and threads for damage; replace as necessary.
5. Place the fuel filter into the filter bowl and lubricate the rubber seal with fresh diesel fuel.
6. With the collar against the filter bowl flange, position the fuel filter against the adapter and hand-tighten the collar.
7. Wash hands after any contact with fuel oil.
8. Open the fuel supply valve.
9. Bleed the system. See Section 3.6.3, Bleeding the Fuel System.

6EOD, 10-32EOZD, 4.5EFOD, and 9-27EFOZD Models:

1. Close the fuel supply valve.
2. Loosen the fuel filter by turning it counterclockwise. Remove the fuel filter and use rags to clean up spilled fuel oil. Dispose of the fuel filter in an approved manner.
3. Clean the contact surface of the fuel oil filter adapter.
4. Lightly lubricate the gasket surface of the new fuel filter with fresh fuel oil. Thread the filter on the adapter until the gasket makes contact; hand-tighten the filter an additional one-half turn. Wash hands after any contact with fuel oil.
5. Open the fuel supply valve.
6. Bleed the system. See Section 3.6.3, Bleeding the Fuel System.

3.6.3 Bleeding the Fuel System

Bleed air from the fuel system to prevent starting failures and/or erratic operation. One or more of the following causes air to collect in the fuel system:

- Operating the generator set until it runs out of fuel.
- Developing air leaks in the plumbing between the fuel tank and the engine-mounted fuel pump.
- Replacing the fuel filter.

Note: Connect the battery during the priming procedure to allow engine cranking.

Note: If the ADC 2100 indicates an overcrank fault during this procedure, disconnect the negative wire from the fuel solenoid (allowing the fuel injection pump to fill with fuel) and repeat this procedure after allowing the starter motor to cool down.

Note: Have a rag handy during the bleeding procedure. Wipe up all spilled diesel fuel after bleeding the system. Wash hands after any contact with fuel oil.

Procedure to Bleed the Fuel System

8-9EOZD and 6.5-7EFOZD Models:

1. Loosen the fuel filter screw at position 1. See Figure 3-5.
2. Initiate the auto/start sequence until fuel, free of air bubbles, flows from the vent screw at position 1. Tighten the screw.
3. Loosen the fuel filter screw at position 2.
4. Initiate the auto/start sequence until fuel, free of air bubbles, flows from the vent screw at position 2. Tighten the screw.
5. Loosen the fuel injection pump screw at position 5.
6. Initiate the auto/start sequence until fuel, free of air bubbles, flows from the vent screw at position 5. Tighten the screw.

6EOD, 10-32EOZD, 4.5EFOD, and 9-27EFOZD Models:

1. Loosen the fuel injection pump screw. See Figure 3-5.
2. Initiate the auto/start sequence until fuel, free of air bubbles, flows from the injection pump screw.
3. Tighten the fuel injection pump screw.

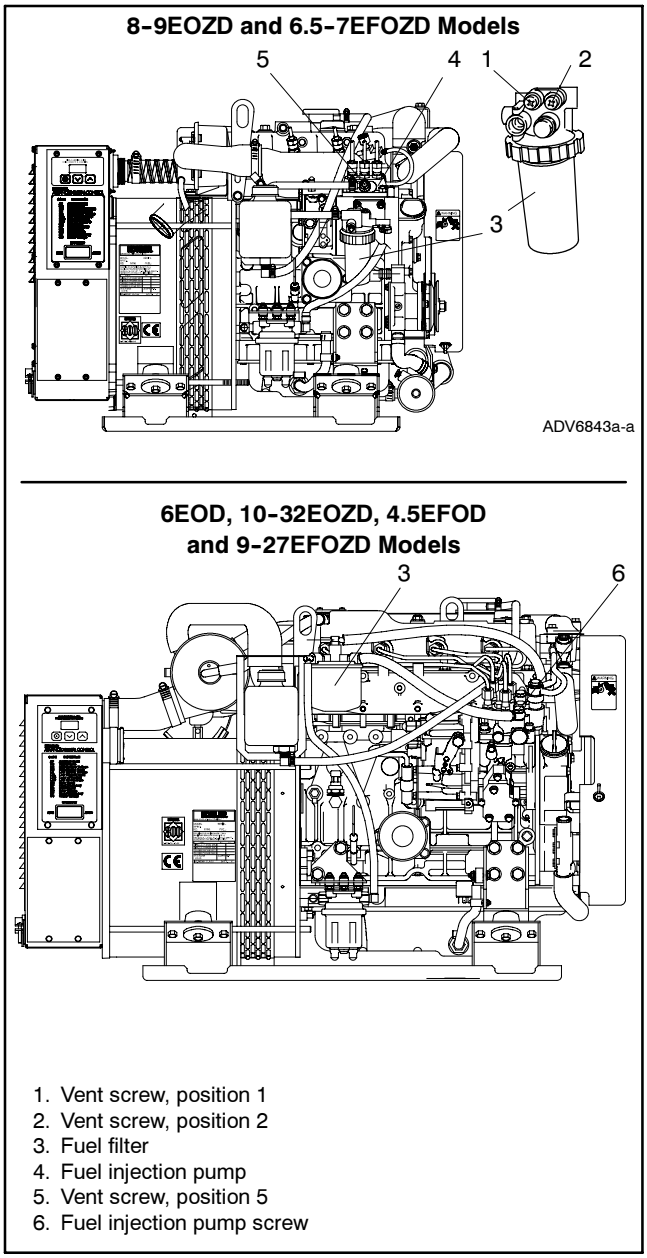

Figure 3-5 Fuel System (Typical)

3.7 Air Intake Silencer/Cleaner

At the interval specified in the service schedule, clean *or replace* the air intake filter. Clean the filter more frequently if the generator set operates in dirty, dusty conditions. Follow one of the procedures described below.

Air Cleaner Service/Replacement

6EOD, 8/9/10/13/20/28/32EOZD, 4.5EFOD, and 6.5/7/9/11/17/17.5/23/27EFOZD Models:

A dry-type air cleaner silences and filters the intake air. The air intake silencer assembly connects to the intake manifold via a flexible hose.

1. Release the spring clips to open the housing and remove the air filter element. See Figure 3-6.
2. Tap the element lightly against a flat surface to dislodge loose surface dirt. Do not clean in any liquid or use compressed air as these will damage the filter element.
3. Examine the element and housing for damage and wear. Replace the element or housing if necessary.
4. Wipe the cover and base with a clean rag to remove any dirt. Make sure that the sealing surfaces fit correctly, and reattach the spring clips.

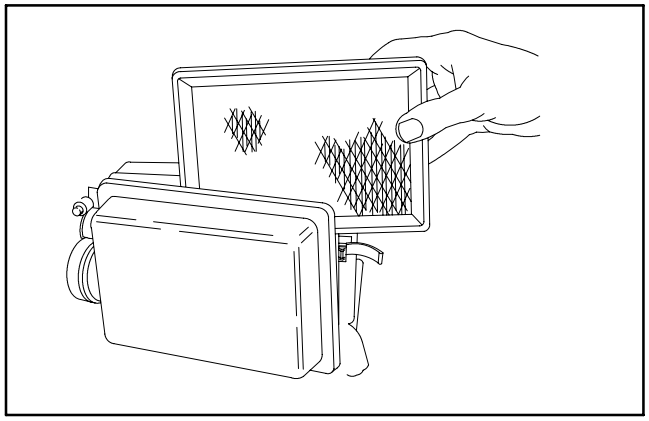

Figure 3-6 Air Cleaner Element Element

14/15.5/23/24EOZD and 11.5/13/20EFOZD Models:

A round air cleaner silences and filters the intake air. Replace a damaged or dirt-contaminated air silencer. See Section 1 and refer to the following procedure:

1. Release the two spring clips and remove the intake silencer cover.
2. Remove the filter element and inspect. If the element is not damaged, continue with step 3. If the element is damaged, replace it, skip step 3, and go to step 4.
3. Wash the element in mild detergent and water solution. Rinse and air dry the element. See Figure 3-7.
4. Wipe the intake silencer cover and base with a clean rag to remove any dirt. Check the base for damage; replace as necessary.

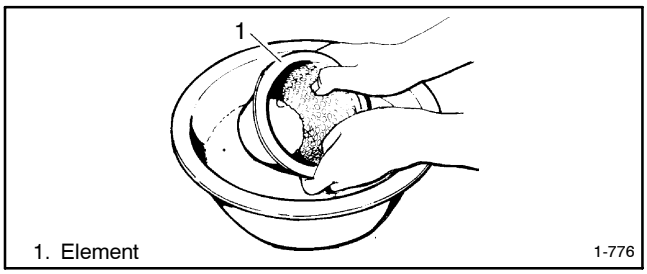

Figure 3-7 Element Washing

5. Reassemble the element and cover assembly to the intake silencer base. Make sure that the sealing surfaces fit and reattach the spring clips. The air intake silencer duct should be at the 5 o'clock position as viewed from the generator end.

3.8 Exhaust System

⚠ WARNING

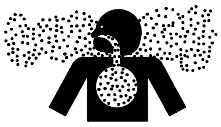

Carbon monoxide.
Can cause severe nausea, fainting, or death.

The exhaust system must be leakproof and routinely inspected.

Inspecting the exhaust system. Carbon monoxide can cause severe nausea, fainting, or death. For the safety of the craft's occupants, install a carbon monoxide detector. Never operate the generator set without a functioning carbon monoxide detector. Inspect the detector before each generator set use.

At the interval specified in the service schedule, inspect the exhaust system components (exhaust manifold, mixing elbow, exhaust hose, hose clamps, silencer, and outlet flapper) for cracks, leaks, and corrosion. See Section 1 for the exhaust outlet location.

Ensure that the carbon monoxide detector(s) is (1) in the craft, (2) functional, and (3) energized whenever the generator set operates.

For your safety: Never operate the generator set without a functioning carbon monoxide detector(s) for your safety and the safety of others on your vessel.

Exhaust System Inspection Points

Check for exhaust leaks and blockages. Check the silencer and piping condition and check for tight exhaust system connections.

- Check the hoses for softness, cracks, leaks, or dents. Replace the hoses as needed.
- Check for corroded or broken metal parts and replace them as needed.
- Check for loose, corroded, or missing clamps. Tighten or replace the hose clamps and/or hangers as needed.
- Check that the exhaust outlet is unobstructed.
- Visually inspect the exhaust system for exhaust leaks *(blowby)*. Check for carbon or soot residue on exhaust components. Carbon and soot residue indicates an exhaust leak. Seal leaks as needed.

3.9 Cooling System

3.9.1 Closed Heat Exchanger

In a closed cooling system, the seawater circulates through separate chambers within the heat exchanger or manifold to cool the engine coolant. The seawater then mixes with the engine exhaust and ejects out of the exhaust outlet. See Figure 3-8 for coolant capacities (include coolant recovery tank capacity of 0.24 L (8 oz.).

Model	L (Qts.)
6EOD and 4.5EFOD	2.0 (2.1)
8EOZD and 6.5EFOZD	3.9 (4.1)
9EOZD and 7EFOZD	2.5 (2.6)
10EOZD and 9EFOZD	2.5 (2.6)
13/14/15.5EOZD and 11/11.5/13EFOZD	4.4 (4.6)
20/23/24EOZD and 17/17.5/20EFOZD	6.0 (6.3)
28/32EOZD and 23/27EFOZD	7.6 (8.0)

Figure 3-8 Engine Coolant Capacities

3.9.2 Checking and Filling Coolant

⚠ WARNING

Hot coolant and steam.
Can cause severe injury or death.

Before removing the pressure cap, stop the generator set and allow it to cool. Then loosen the pressure cap to relieve pressure.

Allow the engine to cool. Release pressure from the cooling system before removing the pressure cap. To release pressure, cover the pressure cap with a thick cloth and then slowly turn the cap counterclockwise to the first stop. Remove the cap after pressure has been completely released and the engine has cooled. Check the coolant level at the tank if the generator set has a coolant recovery tank.

NOTICE

Saltwater damage. Saltwater quickly deteriorates metals. Wipe up saltwater on and around the generator set and remove salt deposits from metal surfaces.

Maintain the coolant level in the coolant recovery tank at approximately 1/4 full. Before filling the cooling system, close all petcocks and tighten all hose clamps. Use a solution of 50% ethylene glycol and 50% clean, softened water to inhibit rust/corrosion and prevent freezing. Add additional coolant solution, as necessary, to the coolant recovery tank. Periodically check the coolant level on closed systems by removing the pressure cap. Do not rely solely on the level in the coolant recovery tank. Add fresh coolant until the level is just below the overflow tube opening.

Note: A coolant solution of 50% ethylene glycol is required. This mix provides freezing protection to −37°C (−34°F) and overheating protection to 129°C (265°F). A coolant solution with less than 50% ethylene glycol may not provide adequate freezing and overheating protection. A coolant solution with more than 50% ethylene glycol can cause engine or component damage. Do not use alcohol or methanol antifreeze or mix them with the specified coolant. Consult the engine manufacturer's operation manual for engine coolant specifications.

Note: Do not add coolant to an overheated engine. Adding coolant to a hot engine can cause the cylinder block or cylinder head to crack. Wait until the engine has cooled.

Note: Pay special attention to the coolant level. After the coolant drains, allow time when refilling the coolant for a complete refill of the engine water jacket. Check the coolant level as prescribed in the Prestart Checklist.

3.9.3 Flushing and Cleaning

For optimum protection, drain, flush, and refill the cooling system at the interval listed in the service schedule.

Flushing and Cleaning Procedure

1. Open the pressure cap and open petcocks located at the heat exchanger, engine block, and cooling system, and let the system drain completely. Some models may have petcocks located behind the belt guard. Remove the pressure cap to simplify draining.

2. Drain, clean, and flush the coolant recovery tank.

3. Flush the system with clean water.

4. Fill the system with recommended coolant.

3.9.4 Pressure Cap

Closed heat exchanger systems utilize a pressure cap to raise the boiling point of the engine coolant, enabling proper operating temperatures. If the cap leaks, replace it with a cap of the same rating. The pressure cap typically has the pressure rating stamped on the cap body.

3.9.5 Seawater Pump

The belt-driven seawater pump is located on the service side of the generator set. Check and change the seawater pump impeller at the interval specified in the service schedule. Follow the instructions included with the impeller kit. If the instructions are not included with the kit, use the following procedure:

Impeller Inspection and Replacement Procedure:

1. Close the seacock.

2. Remove the seawater pump coverplate. See Figure 3-9.

3. Remove the impeller.

4. Inspect the impeller for damaged, cracked, broken, missing or flattened vanes. The impeller vanes should be straight and flexible. See Figure 3-10. Replace the impeller if it is damaged.

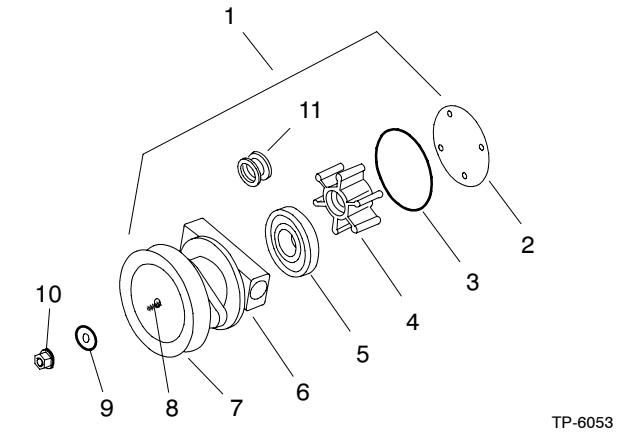

1. Seawater pump
2. Coverplate
3. Gasket
4. Impeller
5. Bearing
6. Housing
7. Pulley
8. Drive shaft
9. Washer
10. Nut
11. Mechanical seal, if equipped

Figure 3-9 Seawater Pump, Typical (8/9/10EOZD Model Shown)

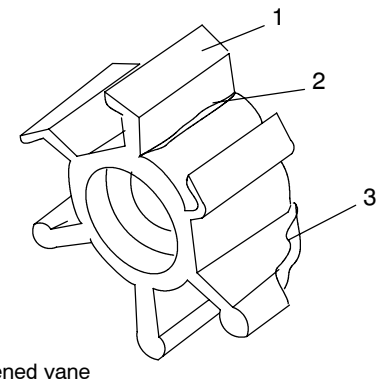

1. Flattened vane
2. Crack
3. Broken vane

Figure 3-10 Worn Impeller

5. Lubricate the impeller with soapy water before installation.

6. Install the impeller.

   Note: During installation push and rotate the impeller in the same direction as the engine rotation until it is thoroughly seated in the impeller housing.

7. Inspect the coverplate and gasket for corrosion and/or damage. Replace components as necessary.

8. Lubricate the gasket with silicon grease and attach the gasket and coverplate to the seawater pump housing.

9. Open the seacock.

10. Start the generator set and check for leaks.

11. Stop the generator set and repair leaks or replace damaged or worn components.

m:sm:003:008

3.9.6 Siphon Break

A siphon break prevents seawater entry into the generator set's engine when the engine exhaust manifold outlet is less than 230 mm (9 in.) above the waterline of a fully loaded, docked or stationary craft. See Figure 3-12. The siphon break may malfunction when the generator set operates while the craft is in contaminated waters or saltwater. Use the following procedure to inspect the siphon break at the intervals listed in the service schedule.

Siphon Break Inspection

1. Stop the generator set.
2. Remove the retaining cap and remove the reed valve for inspection. See Figure 3-11.
3. Use a mild detergent to remove residue and oxidation from the reed valve.
4. Clear blockage from the reed valve opening.
5. Replace the siphon break if the reed valve is cracked or if the reed valve material has hardened or deteriorated.
6. Install the reed valve into the mounting base with the valve downward. See Figure 3-11, item 2.
7. Install and only finger tighten the retaining cap. Do not overtighten it.

Note: Ensure that the siphon break's cap is tight before operating the generator set.

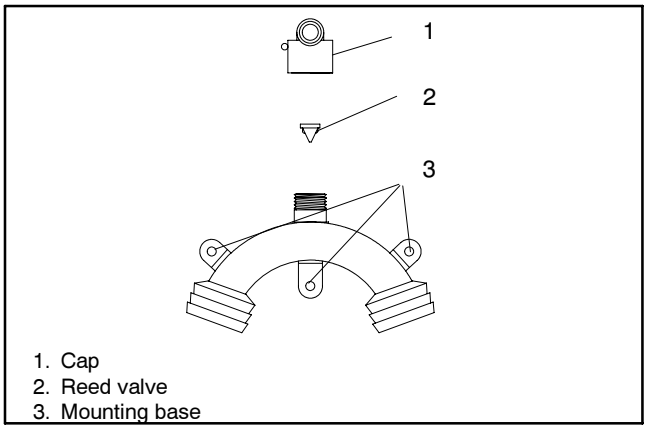

Figure 3-11 Siphon Break

m:sm:003:007

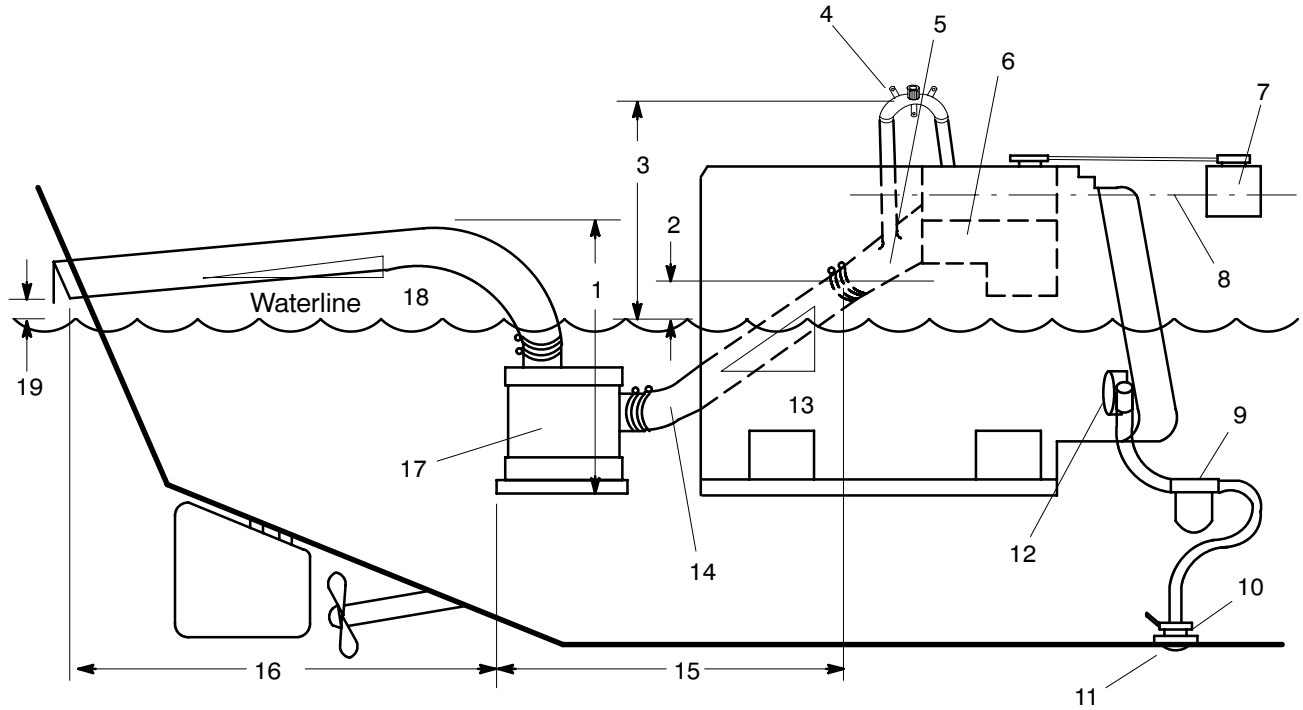

1. Silencer vertical lift 1.2 m (4 ft.) max.
2. Exhaust mixer elbow distance above waterline. If less than 23 cm (9 in.), a siphon break is required.
3. Siphon break distance above waterline 30.5 cm (1 ft.) min.
4. Siphon break
5. Exhaust mixer elbow
6. Heat exchanger (locations vary by model)
7. Coolant recovery tank
8. Locate coolant recovery tank at the same height as the heat exchanger
9. Seawater strainer
10. Seacock
11. Intake strainer
12. Engine-driven seawater pump
13. Exhaust hose pitch 1.3 cm per 30.5 cm (0.5 in. per ft.) min.
14. Water lock (optional)
15. Silencer distance from exhaust mixer elbow 3 m (10 ft.) max.
16. Maximum distance between silencer and exhaust outlet of 1.5 m (5 ft.)
17. Silencer (customer supplied)
18. Exhaust hose pitch 1.3 cm per 30.5 cm (0.5 in. per ft.) min.
19. Exhaust outlet distance above the waterline 10 cm (4 in.) min.

TP-5586-3

Figure 3-12 Siphon Break (Plastic “U” Type) Installation

Note: Consult the installation manual for complete explanation of dimensions and other installation considerations.

3.9.7 Anticorrosion Zinc Anode

The heat exchanger on models 8/9/10EOZD, 6.5/7/9EFOZD, 28/32EOZD, and 23/27EFOZD contains an anticorrosion zinc anode (plug) to prevent electrolytic corrosion by seawater.

Check and replace the anticorrosion zinc anode at intervals recommended in the service schedule. Depending upon operating conditions and seawater properties, the anticorrosion zinc anode may require more frequent replacement. See Section 1 for the location and use the following procedure.

Anticorrosion Zinc Anode Replacement

1. With the generator set cooled, close the seacock, open the petcock on the engine, and drain the coolant into a suitable container.

2. Remove the anticorrosion zinc anode (plug) from the heat exchanger.

3. Use a wire brush to remove the loose corrosion on the anticorrosion zinc anode. Replace the anode according to Figure 3-13 and Figure 3-14.

Anticorrosion Zinc Anode Replacement		
Models	**New Anode Dimensions mm (in.)**	**Replace When Percent of Zinc Remaining Is:**
8/9/10EOZD 6.5/7/9EFOZD	9 (0.34) x 43 (1.7)	<50% of length/diameter
28/32EOZD 23/27EFOZD	9 (0.34) x 19 (0.75)	<50% of length/diameter

Figure 3-13 Anticorrosion Zinc Anode (Plug) Measurements

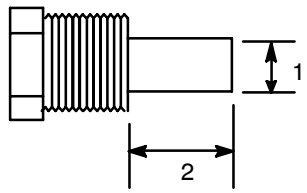

1. Diameter: 9 mm (0.34 in.)
2. Length: 43 mm (1.7 in.) for 8/9/10EOZD, 6.5/7/9EFOZD models or 19 mm (0.75 in.) for 28/32EOZD, 23/27EFOZD models

Figure 3-14 Anticorrosion Zinc Anode (Plug)

4. Clean the threaded hole of the heat exchanger and coat the threads of the anticorrosion zinc anode (plug) with pipe sealant suitable for marine applications. Cut the anticorrosion zinc to the correct length. Install the anticorrosion zinc anode into the heat exchanger.

5. Close the petcock on the engine and open the seacock. Refill the cooling system.

6. Start the generator set and check for leaks at the anticorrosion zinc anode location. The pump is operating if the cooling water flows from the exhaust outlet. If water is not discharging at the exhaust outlet, see Section 2.1, Prestart Checklist—Seawater Pump Priming.

3.10 Belt Tension

⚠ WARNING

Hazardous voltage. Moving parts. Can cause severe injury or death.

Operate the generator set only when all guards and electrical enclosures are in place.

Servicing the generator set when it is operating. Exposed moving parts can cause severe injury or death. Keep hands, feet, hair, clothing, and test leads away from the belts and pulleys when the generator set is running. Replace guards, screens, and covers before operating the generator set.

Check the belt tensions at the interval specified in the service schedule. If tensions are not within the specifications, adjust as necessary using the following procedures.

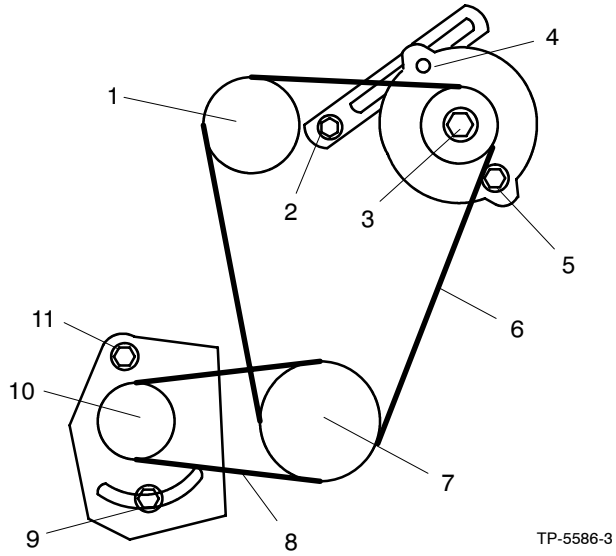

1. Engine-driven water pump pulley
2. Adjusting arm pivot screw
3. Battery charging alternator pulley
4. Alternator adjusting screw
5. Alternator pivot screw
6. Check the alternator belt deflection (tension) here
7. Crankshaft pulley
8. Check the seawater pump belt deflection (tension) here
9. Seawater pump adjusting screw
10. Seawater pump pulley
11. Pivot screw

Figure 3-15 Belt Tension (Typical)

3.10.1 Seawater Pump Belt Tensioning Procedure, If Equipped

1. Remove the belt guard.
2. Check the belt tension at the midpoint of the longest span of the belt using a belt-tensioning tool set to 55 ft. lbs. See Figure 3-15. Recheck a new belt tension after 10 minutes of operation.

   Note: If the belt tension is not within specifications, go to step 3. If the belt tension is within specifications, go to step 7.

3. Loosen the pivot and adjusting screws.
4. While prying the seawater pump outward, tighten the adjusting screw.
5. Tighten the pivot screw.
6. Recheck and adjust as necessary.
7. Replace the belt guard.

3.10.2 Battery Charging Alternator Belt Tensioning Procedure

1. Remove the belt guard.
2. Check the belt tension at the midpoint of the longest span of the belt by pressing with your finger. See Figure 3-15 and Figure 3-16. If the belt is not within the specifications, go to step 3. If the belt is within the specifications, go to step 7.

Belt Type	Deflection mm (in.)
New	8–12 (0.3–0.5)
Used	10–14 (0.4–0.6)

Figure 3-16 Belt Specifications

3. Loosen the adjusting arm pivot screw, alternator pivot screw, and alternator adjusting screw.
4. While prying the alternator outward, tighten the alternator adjusting screw.
5. Tighten the adjusting arm pivot screw and alternator pivot screw.
6. Recheck and adjust as necessary.
7. Replace the belt guard.

3.11 Battery

Consult the battery manufacturer's instructions regarding battery care and maintenance.

3.12 Generator Storage Procedure

Keep the craft afloat for generator operation during the storage procedure. Follow the procedure below when storing your generator set for 3 months or more.

Generator Set Storage Procedure

1. Start and run the generator set until it reaches operating temperature or about 15 minutes.
2. Stop the generator set.
3. Change the oil and oil filter. See Section 3.5.3.
4. Close the seacock and remove the hose at the seacock. Place the hose in a container having approximately 3.7–7.5 L (1–2 U.S. gallons) of coolant/antifreeze. Kohler Co. recommends using an environmentally friendly potable antifreeze such as Peak® RV/marine propylene glycol/water mix or equivalent.
5. Disconnect the lead (#87) to the low seawater pressure (LWP) switch.
6. With a suitable container at the exhaust outlet, run the generator set until coolant discharges at the exhaust outlet or until the coolant mixture is depleted. Do not allow coolant mixture to flow into waterways.
7. Reconnect the lead (#87) to the low seawater pressure (LWP) switch.
8. Stop the generator set.
9. Connect a hose to the seacock. Leave the seacock closed.
10. Check the coolant level of the heat exchanger and add coolant if necessary.

    Note: Use antifreeze capable of withstanding the lowest possible temperatures.

11. Clean the exterior of the generator set and spread a light film of oil or silicon spray over any exposed surfaces that may be subject to rust or corrosion.
12. Disconnect and remove the battery. Place the battery in a warm, dry location for the storage period. Recharge the battery once a month to maintain a full charge.
13. Select a well-ventilated (not humid or dusty) location to store the generator.
14. Cover the entire unit with a dust cover.

    Note: Run the generator set once a month whenever possible.

This section contains generator set troubleshooting, diagnostic, and repair information.

Use the following charts as a quick troubleshooting reference. The table groups generator set faults and suggests likely causes and remedies. The table also refers you to more detailed information including sections of this manual, the generator set service manual (S/M), the generator set installation manual (I/M), and the engine service manual (Engine S/M) to correct the indicated problem.

Corrective action and testing often require knowledge of electrical and electronic circuits. To avoid additional problems caused by incorrect repairs, have an authorized service distributor/dealer perform service.

NOTICE

Fuse replacement. Replace fuses with fuses of the same ampere rating and type (for example: 3AB or 314, ceramic). Do not substitute clear glass-type fuses for ceramic fuses. Refer to the wiring diagram when the ampere rating is unknown or questionable.

Maintain a record of repairs and adjustments performed on the equipment. If the procedures in this manual do not explain how to correct the problem, contact an authorized distributor/dealer. Use the record to help describe the problem and repairs or adjustments made to the equipment.

4.1 Fault Codes

The Advanced Digital Control displays fault codes to aid in troubleshooting. Fault codes, descriptions, and recommended actions are listed in Figure 2-5.

Identify and correct the cause of the fault condition. Then reset the controller after a fault shutdown. See Section 2.6.5.

4.2 Controller Troubleshooting

Figure 4-1 contains troubleshooting, diagnostic, and repair information for the Advanced Digital Control.

x:gt:001:002a:

Problem	Possible Cause	Corrective Action
Controller LED display is off	No power to the controller:	
	Continuous power mode jumper is disconnected and the generator set has not run for 48 hours or longer.	Controller display will automatically activate when a remote start command is received or the generator set master switch is moved to the RUN position. Connect the jumper to maintain continuous power to the controller, if desired.
	Controller fuse (F3) is blown.	Replace the fuse. If the fuse blows again, contact the distributor/dealer.
	Low or no battery voltage.	Check connections. Check generator set battery.
	Generator set master switch is in the OFF/RESET position.	Move generator set master switch to the AUTO or RUN position.
	Generator set master switch in AUTO but no start command has been received since last controller reset.	No action required. Controller display will activate when a remote start command is received or the generator set master switch is moved to the RUN position. Use the remote switch to start generator set and activate the controller display, if desired.

Figure 4-1 Controller Troubleshooting Chart

Trouble Symptoms										Probable Causes	Recommended Actions	Section or Publication Reference*
Does not crank	Cranks but does not start	Starts hard	No or low output voltage	Stops suddenly	Lacks power	Overheats	Low oil pressure	High fuel consumption	Excessive or abnormal noise			
Controller												
x				x						Generator set master switch in the OFF position	Move the generator set master switch to the correct position (RUN or AUTO).	Section 2
x				x						Controller fuse (F3) blown	Replace the blown controller fuse. If the fuse blows again, troubleshoot the controller.†	Section 2, W/D
x				x						The relay interface board fuse (F2) blown	Replace the blown relay interface board fuse. If the fuse blows again, troubleshoot the controller.†	Section 2, W/D
				x						The auxiliary winding fuse (F1) blown	Replace the blown auxiliary winding fuse. If the fuse blows again, troubleshoot the controller.†	Section 2, W/D
x				x						Controller circuit breaker tripped	Reset the controller circuit breaker.	Section 2
x										Controller master or start/stop switch inoperative	Replace the controller master switch.	—
				x						Controller fault	Troubleshoot the controller.†	Gen. S/M
				x						Remote stop command received from a remote switch or ATS	Check the remote switch position.	
Cooling System												
						x		x		Air openings clogged	Clean the air openings.	—
						x				Impeller inoperative	Replace the impeller	Section 3
						x		x		Seawater strainer clogged or restricted	Clean the strainer.	Section 3
				x						High temperature shutdown	Allow the engine to cool down. Then troubleshoot the cooling system.	Sec. 3, Eng. O/M
				x						Low coolant level shutdown	Restore the coolant to normal operating level.	Section 3
						x				Coolant level low	Restore the coolant to normal operating level.	Section 3
						x				Thermostat inoperative	Replace the thermostat.	Eng. S/M
						x				Cooling water pump inoperative	Tighten or replace the belt. Replace the water pump.	Eng. O/M or S/M

* Sec./Section—numbered section of this manual; ATS—Automatic Transfer Switch; Eng.—Engine; Gen.—Generator Set; I/M—Installation Manual; O/M—Operation Manual; S/M—Service Manual; S/S—Spec Sheet; W/D—Wiring Diagram

† Have an authorized service distributor/dealer perform this service.

Trouble Symptoms										Probable Causes	Recommended Actions	Section or Publication Reference*
Does not crank	Cranks but does not start	Starts hard	No or low output voltage	Stops suddenly	Lacks power	Overheats	Low oil pressure	High fuel consumption	Excessive or abnormal noise			
Electrical System (DC circuits)												
x	x									Battery connections loose, corroded, or incorrect	Verify that the battery connections are correct, clean, and tight.	Section 3
x	x									Battery weak or dead	Recharge or replace the battery. The spec sheet provides recommended battery CCA rating.	Section 3, S/S
x				x						Engine harness connector(s) not locked tight	Disconnect the engine harness connector(s) then reconnect it to the controller.	W/D
				x						Fault shutdown	Reset the controller.	Section 2
x	x									Starter/starter solenoid inoperative	Replace the starter or starter solenoid.	Eng. S/M
Engine												
	x	x			x			x		Air cleaner/backfire flame arrestor clogged	Clean or replace the filter element.	Section 2
	x	x				x		x	x	Compression weak	Check the compression.†	Eng. S/M
			x		x	x		x	x	Engine overload	Reduce the electrical load. See the generator set installation manual for wattage specifications.	I/M
									x	Exhaust system leak	Inspect the exhaust system. Replace the inoperative exhaust system components.†	Section 3, I/M
									x	Exhaust system not securely installed	Inspect the exhaust system. Tighten the loose exhaust system components.†	Section 3, I/M
				x						Overspeed shutdown	Reset the controller. If the overspeed fault occurs again, contact the distributor/dealer.	
		x	x		x			x		Governor inoperative	Adjust the governor.†	Gen. S/M
					x				x	Valve clearance incorrect	Adjust the valves.†	Eng. S/M
									x	Vibration excessive	Tighten all loose hardware.	—

* Sec./Section—numbered section of this manual; ATS—Automatic Transfer Switch; Eng.—Engine; Gen.—Generator Set; I/M—Installation Manual; O/M—Operation Manual; S/M—Service Manual; S/S—Spec Sheet; W/D—Wiring Diagram

† Have an authorized service distributor/dealer perform this service.

Trouble Symptoms										Probable Causes	Recommended Actions	Section or Publication Reference*
Does not crank	Cranks but does not start	Starts hard	No or low output voltage	Stops suddenly	Lacks power	Overheats	Low oil pressure	High fuel consumption	Excessive or abnormal noise			
Fuel System												
	x			x						Fuel tank empty or fuel valve shut off	Add fuel and move the fuel valve to the ON position.	—
	x	x		x	x					Fuel filter restriction	Clean or replace the fuel filter.	Eng. O/M
	x									Fuel solenoid inoperative	Troubleshoot the fuel solenoid.†	Eng. S/M
	x	x			x					Air in fuel system (diesel only)	Bleed the diesel fuel system.	Eng. O/M
	x	x			x					Fuel or fuel injectors dirty or faulty (diesel only)	Clean, test, and/or replace the inoperative fuel injector.†	Eng. S/M
	x	x			x			x		Fuel injection timing out of adjustment (diesel only)	Adjust the fuel injection timing.†	Eng. S/M
	x				x			x		Fuel feed or injection pump inoperative (diesel only)	Rebuild or replace the injection pump.†	Eng. S/M
Generator												
			x							AC output circuit breaker open	Reset the breaker and check for AC voltage at the generator side of the circuit breaker.	—
				x						Overcrank shutdown	Close the seacock and completely drain the water from the exhaust system at the silencer's drain plug. Do not attempt generator set restart. Contact an authorized distributor/dealer.	Section 2.6.2
x										Transfer switch test switch in the OFF position	Move the transfer switch test switch to the AUTO position.	ATS O/M
			x							Wiring, terminals, or pin in the exciter field open	Check for continuity.	Gen. S/M, W/D
			x							Main field (rotor) inoperative (open or grounded)	Test and/or replace the rotor.†	Gen. S/M
			x							Stator inoperative (open or grounded)	Test and/or replace the stator.†	Gen. S/M
									x	Vibration excessive	Tighten loose components.†	—
Lube System												
						x	x		x	Oil level low	Restore the oil level. Inspect the generator set for oil leaks.	Eng. O/M
				x						Low oil pressure shutdown	Check the oil level.	Eng. O/M
	x	x					x		x	Crankcase oil type incorrect for ambient temperature	Change the oil. Use oil with a viscosity suitable for the operating climate.	Eng. O/M

* Sec./Section—numbered section of this manual; ATS—Automatic Transfer Switch; Eng.—Engine; Gen.—Generator Set; I/M—Installation Manual; O/M—Operation Manual; S/M—Service Manual; S/S—Spec Sheet; W/D—Wiring Diagram

† Have an authorized service distributor/dealer perform this service.

⚠ WARNING

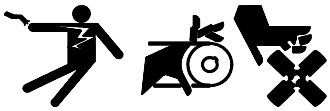

Accidental starting.
Can cause severe injury or death.

Disconnect the battery cables before working on the generator set. Remove the negative (-) lead first when disconnecting the battery. Reconnect the negative (-) lead last when reconnecting the battery.

Disabling the generator set. Accidental starting can cause severe injury or death. Before working on the generator set or connected equipment, disable the generator set as follows: (1) Move the generator set master switch to the OFF position. (2) Disconnect the power to the battery charger. (3) Remove the battery cables, negative (-) lead first. Reconnect the negative (-) lead last when reconnecting the battery. Follow these precautions to prevent starting of the generator set by an automatic transfer switch, remote start/stop switch, or engine start command from a remote computer.

⚠ WARNING

Hazardous voltage. Moving parts.
Can cause severe injury or death.

Operate the generator set only when all guards and electrical enclosures are in place.

Grounding electrical equipment. Hazardous voltage can cause severe injury or death. Electrocution is possible whenever electricity is present. Ensure you comply with all applicable codes and standards. Electrically ground the generator set, transfer switch, and related equipment and electrical circuits. Turn off the main circuit breakers of all power sources before servicing the equipment. Never contact electrical leads or appliances when standing in water or on wet ground because these conditions increase the risk of electrocution.

5.1 Wiring Diagram Reference

Figure 5-1 lists the wiring diagram numbers and locations.

Model	Wiring Diagram	Figure	Schematic	Figure
6EOD 4.5EFOD	GM42202-E	Figure 5-2	ADV-7095A-D ADV-7095B-D	Figure 5-3 Figure 5-4
9EOZD 7EFOZD	GM50490-B	Figure 5-5	ADV-7283A-A ADV-7283B-A	Figure 5-7 Figure 5-8
8EOZD, 10-32EOZD, 6.5EFOZD, 8.5-27EFOZD	GM50488-A	Figure 5-6		

Figure 5-1 Wiring Diagrams

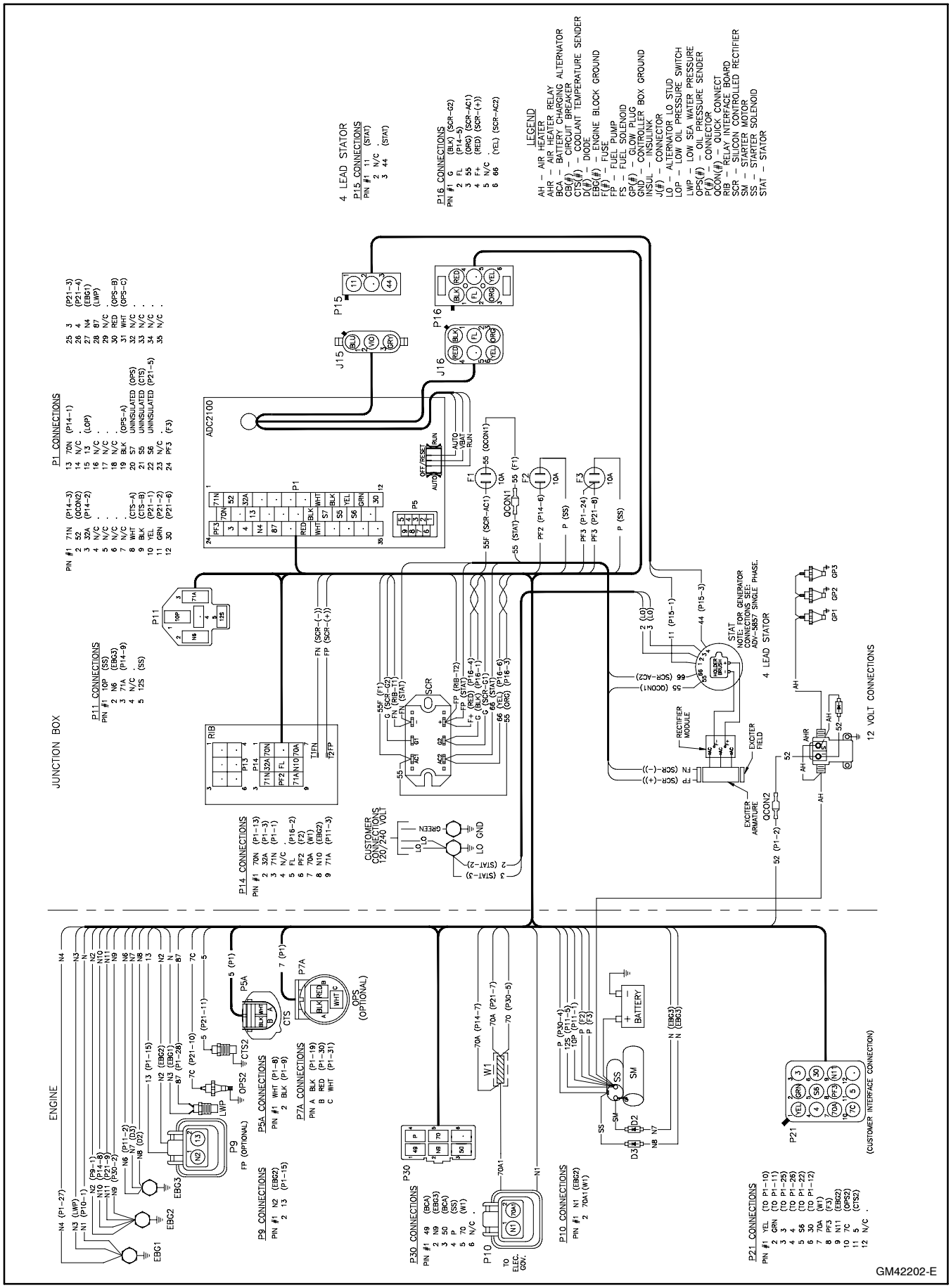

Figure 5-2 Wiring Diagram for Model 6EOD/4.5EFOD

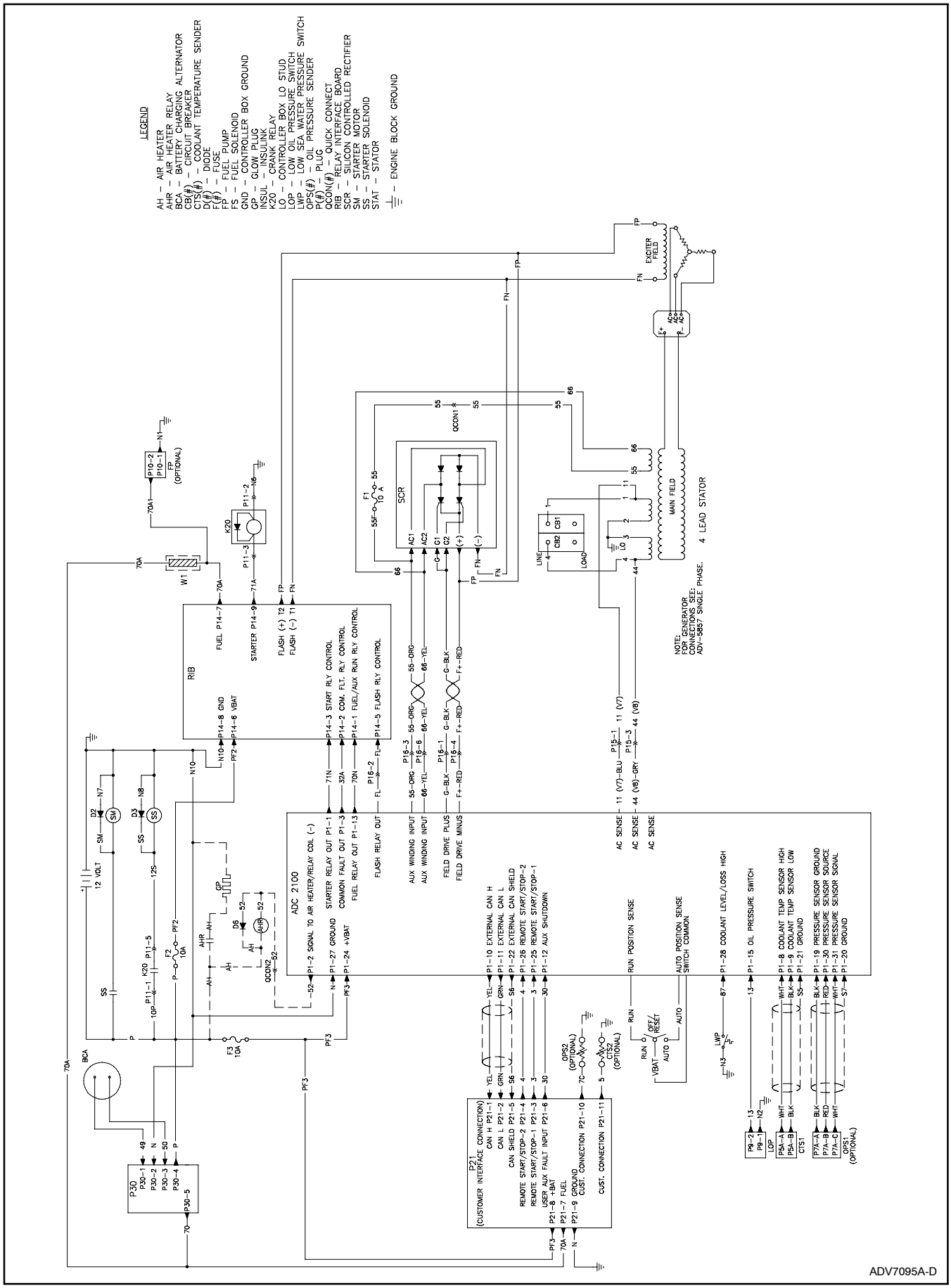

Figure 5-3 Schematic for Model 6EOD/4.5EFOD (Sheet 1 of 2)

ADC 2100 CONTROLLER

P1 CONNECTIONS

P1–1	STARTER RELAY OUT
P1–2	SIGNAL TO AIR HEATER/RELAY COIL (–)
P1–3	COMMON FAULT
P1–4	GOVERNOR 1B
P1–5	GOVERNOR 1A
P1–6	GOVERNOR 2A
P1–7	GOVERNOR 2B
P1–8	COOLANT TEMP SENSOR HIGH
P1–9	COOLANT TEMP SENSOR LOW
P1–10	EXTERNAL CAN H
P1–11	EXTERNAL CAN L
P1–12	AUX SHUTDOWN
P1–13	FUEL RELAY OUT
P1–14	TACH OUT
P1–15	OIL PRESSURE SWITCH
P1–16	GROUND
P1–17	VR SENSOR LOW
P1–18	GROUND
P1–19	PRESSURE SENSOR GROUND
P1–20	GROUND
P1–21	GROUND
P1–22	GROUND
P1–23	GROUND
P1–24	VBAT +
P1–25	REMOTE START/STOP 1
P1–26	REMOTE START/STOP 2
P1–27	GROUND
P1–28	COOLANT LEVEL/LOSS HIGH
P1–29	VR SENSOR HIGH
P1–30	PRESSURE SENSOR SOURCE
P1–31	PRESSURE SENSOR SIGNAL
P1–32	GROUND
P1–33	VBAT ON
P1–34	GROUND
P1–35	RS232 TXD

P5 CONNECTIONS

P5–1	N/C
P5–2	RS232 RXD
P5–3	RS232 TXD
P5–4	N/C
P5–5	GROUND
P5–6	N/C
P5–7	N/C
P5–8	N/C
P5–9	N/C

J16 CONNECTIONS

P16–1	FIELD DRIVE PLUS (G)
P16–2	FLASH RELAY OUT
P16–3	AUX WINDING INPUT (55)
P16–4	FIELD DRIVE MINUS (F+)
P16–5	N/C
P16–6	AUX WINDING INPUT (66)

J15 CONNECTIONS

J15–1	AC INPUT (V7/11)
J15–2	AC INPUT (V9)
J15–3	AC INPUT (V8/44)

RELAY INTERFACE BOARD

P13 CONNECTIONS

P13–1	RUN RELAY COMMON
P13–2	COMMON FAULT COMMON
P13–3	COMMON FAULT NC
P13–4	RUN RELAY NO
P13–5	RUN RELAY NC
P13–6	COMMON FAULT NO

P14 CONNECTIONS

P14–1	FUEL/AUX RUN RELAY CONTROL
P14–2	COMMON FAULT RELAY CONTROL
P14–3	STARTER RELAY CONTROL
P14–4	IGNITION NEGATIVE
P14–5	FLASH RELAY CONTROL
P14–6	VBAT
P14–7	FUEL (70A)
P14–8	GROUND
P14–9	STARTER (71A)

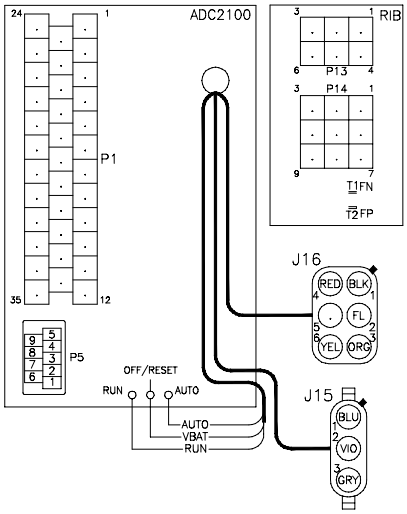

ADV7095B-D

Figure 5-4 Schematic for Model 6EOD/4.5EFOD (Sheet 2 of 2)

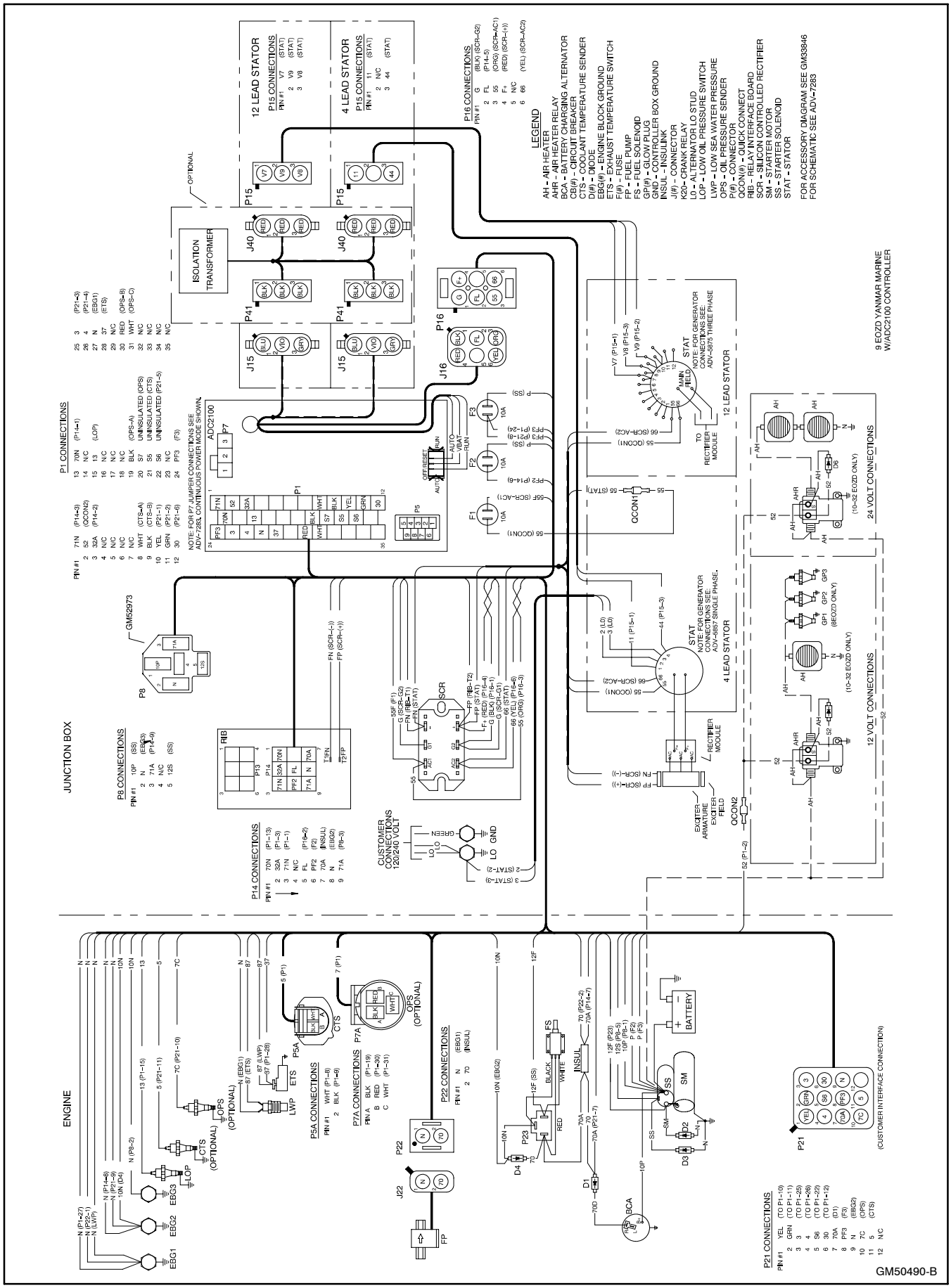

Figure 5-5 Wiring Diagram for Model 9EOZD/7EFOZD

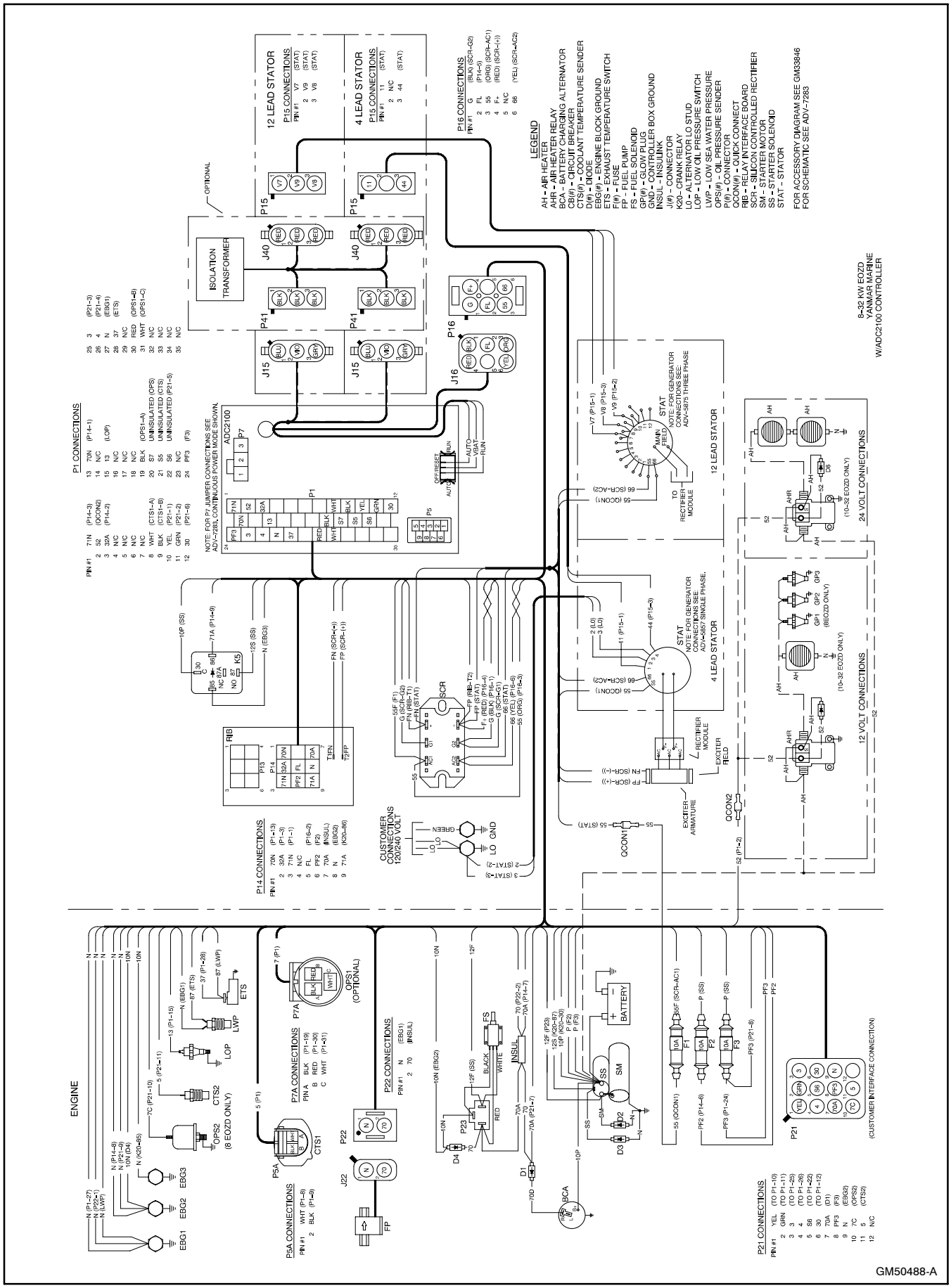

Figure 5-6 Wiring Diagram for Models 8, 10–32EOZD/6.5, 8.5–27EFOZD

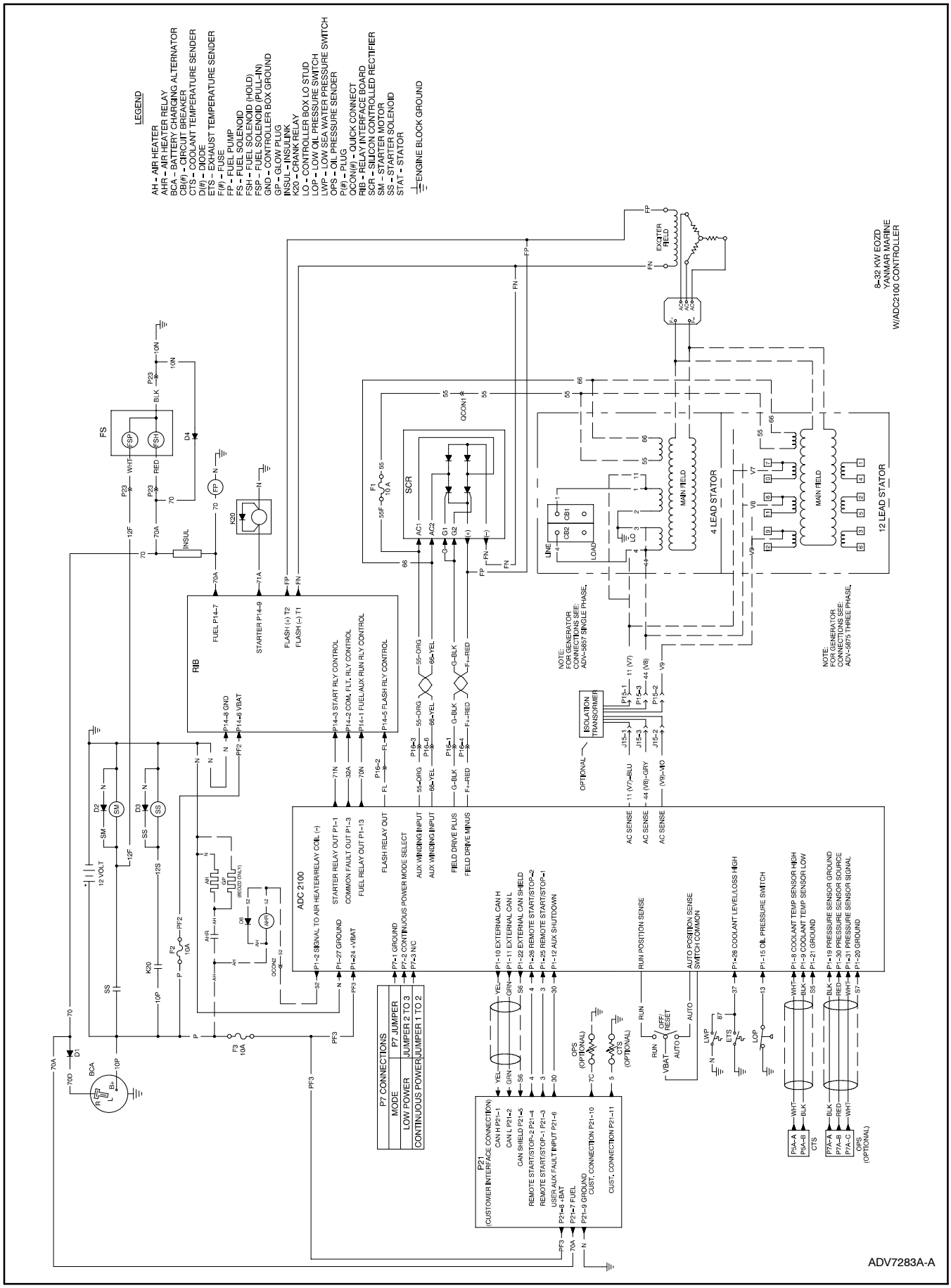

Figure 5-7 Schematic for Models 8-32EOZD/6.5-27EFOZD (Sheet 1 of 2)

ADC 2100 CONTROLLER

P1 CONNECTIONS
P1-1 STARTER RELAY OUT
P1-2 SIGNAL TO AIR HEATER/RELAY COIL (–)
P1-3 COMMON FAULT
P1-4 GOVERNOR 1B
P1-5 GOVERNOR 1A
P1-6 GOVERNOR 2A
P1-7 GOVERNOR 2B
P1-8 COOLANT TEMP SENSOR HIGH
P1-9 COOLANT TEMP SENSOR LOW
P1-10 EXTERNAL CAN H
P1-11 EXTERNAL CAN L
P1-12 AUX SHUTDOWN
P1-13 FUEL RELAY OUT
P1-14 TACH OUT
P1-15 OIL PRESSURE SWITCH
P1-16 GROUND
P1-17 VR SENSOR LOW
P1-18 GROUND
P1-19 PRESSURE SENSOR GROUND
P1-20 GROUND
P1-21 GROUND
P1-22 GROUND
P1-23 GROUND
P1-24 VBAT +
P1-25 REMOTE START/STOP 1
P1-26 REMOTE START/STOP 2
P1-27 GROUND
P1-28 COOLANT LEVEL/LOSS HIGH
P1-29 VR SENSOR HIGH
P1-30 PRESSURE SENSOR SOURCE
P1-31 PRESSURE SENSOR SIGNAL
P1-32 GROUND
P1-33 VBAT ON
P1-34 GROUND
P1-35 RS232 TXD

P5 CONNECTIONS
P5-1 N/C
P5-2 RS232 RXD
P5-3 RS232 TXD
P5-4 N/C
P5-5 GROUND
P5-6 N/C
P5-7 N/C
P5-8 N/C
P5-9 N/C

P7 CONNECTIONS
P7-1 N/C
P7-2 CONTINUOUS POWER MODE SELECT
P7-3 GROUND

J16 CONNECTIONS
P16-1 FIELD DRIVE PLUS (G)
P16-2 FLASH RELAY OUT
P16-3 AUX WINDING INPUT (55)
P16-4 FIELD DRIVE MINUS (F+)
P16-5 N/C
P16-6 AUX WINDING INPUT (66)

J15 CONNECTIONS
J15-1 AC INPUT (V7/11)
J15-2 AC INPUT (V9)
J15-3 AC INPUT (V8/44)

RELAY INTERFACE BOARD

P13 CONNECTIONS
P13-1 RUN RELAY COMMON
P13-2 COMMON FAULT COMMON
P13-3 COMMON FAULT NC
P13-4 RUN RELAY NO
P13-5 RUN RELAY NC
P13-6 COMMON FAULT NO

P14 CONNECTIONS
P14-1 FUEL/AUX RUN RELAY CONTROL
P14-2 COMMON FAULT RELAY CONTROL
P14-3 STARTER RELAY CONTROL
P14-4 IGNITION NEGATIVE
P14-5 FLASH RELAY CONTROL
P14-6 VBAT
P14-7 FUEL (70A)
P14-8 GROUND
P14-9 STARTER (71A)

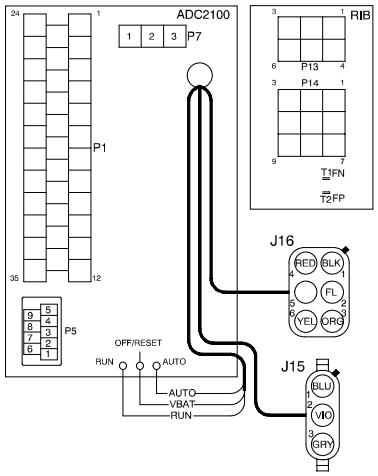

ADV7283B-A

Figure 5-8 Schematic for Models 8-32EOZD/6.5-27EFOZD (Sheet 2 of 2)

Appendix A Abbreviations

The following list contains abbreviations that may appear in this publication.

A, amp	ampere
ABDC	after bottom dead center
AC	alternating current
A/D	analog to digital
ADC	analog to digital converter
adj.	adjust, adjustment
ADV	advertising dimensional drawing
AHWT	anticipatory high water temperature
AISI	American Iron and Steel Institute
ALOP	anticipatory low oil pressure
alt.	alternator
Al	aluminum
ANSI	American National Standards Institute (formerly American Standards Association, ASA)
AO	anticipatory only
API	American Petroleum Institute
approx.	approximate, approximately
AR	as required, as requested
AS	as supplied, as stated, as suggested
ASE	American Society of Engineers
ASME	American Society of Mechanical Engineers
assy.	assembly
ASTM	American Society for Testing Materials
ATDC	after top dead center
ATS	automatic transfer switch
auto.	automatic
aux.	auxiliary
A/V	audiovisual
avg.	average
AVR	automatic voltage regulator
AWG	American Wire Gauge
AWM	appliance wiring material
bat.	battery
BBDC	before bottom dead center
BC	battery charger, battery charging
BCA	battery charging alternator
BCI	Battery Council International
BDC	before dead center
BHP	brake horsepower
blk.	black (paint color), block (engine)
blk. htr.	block heater
BMEP	brake mean effective pressure
bps	bits per second
br.	brass
BTDC	before top dead center
Btu	British thermal unit
Btu/min.	British thermal units per minute
C	Celsius, centigrade
cal.	calorie
CARB	California Air Resources Board
CB	circuit breaker
cc	cubic centimeter
CCA	cold cranking amps
ccw.	counterclockwise
CEC	Canadian Electrical Code
cfh	cubic feet per hour
cfm	cubic feet per minute
CG	center of gravity
CID	cubic inch displacement
CL	centerline
cm	centimeter
CMOS	complementary metal oxide substrate (semiconductor)
cogen.	cogeneration
Com	communications (port)
conn.	connection
cont.	continued
CPVC	chlorinated polyvinyl chloride
crit.	critical
CRT	cathode ray tube
CSA	Canadian Standards Association
CT	current transformer
Cu	copper
cu. in.	cubic inch
cw.	clockwise
CWC	city water-cooled
cyl.	cylinder
D/A	digital to analog
DAC	digital to analog converter
dB	decibel
dBA	decibel (A weighted)
DC	direct current
DCR	direct current resistance
deg., °	degree
dept.	department
dia.	diameter
DI/EO	dual inlet/end outlet
DIN	Deutsches Institut fur Normung e. V. (also Deutsche Industrie Normenausschuss)
DIP	dual inline package
DPDT	double-pole, double-throw
DPST	double-pole, single-throw
DS	disconnect switch
DVR	digital voltage regulator
E, emer.	emergency (power source)
EDI	electronic data interchange
EFR	emergency frequency relay
e.g.	for example (*exempli gratia)*
EG	electronic governor
EGSA	Electrical Generating Systems Association
EIA	Electronic Industries Association
EI/EO	end inlet/end outlet
EMI	electromagnetic interference
emiss.	emission
eng.	engine
EPA	Environmental Protection Agency
EPS	emergency power system
ER	emergency relay
ES	engineering special, engineered special
ESD	electrostatic discharge
est.	estimated
E-Stop	emergency stop
etc.	et cetera (and so forth)
exh.	exhaust
ext.	external
F	Fahrenheit, female
fglass.	fiberglass
FHM	flat head machine (screw)
fl. oz.	fluid ounce
flex.	flexible
freq.	frequency
FS	full scale
ft.	foot, feet
ft. lbs.	foot pounds (torque)
ft./min.	feet per minute
g	gram
ga.	gauge (meters, wire size)
gal.	gallon
gen.	generator
genset	generator set
GFI	ground fault interrupter
GND, ⏚	ground
gov.	governor
gph	gallons per hour
gpm	gallons per minute
gr.	grade, gross
GRD	equipment ground
gr. wt.	gross weight
H x W x D	height by width by depth
HC	hex cap
HCHT	high cylinder head temperature
HD	heavy duty
HET	high exhaust temperature
hex	hexagon
Hg	mercury (element)
HH	hex head
HHC	hex head cap
HP	horsepower
hr.	hour
HS	heat shrink
hsg.	housing
HVAC	heating, ventilation, and air conditioning
HWT	high water temperature
Hz	hertz (cycles per second)
IC	integrated circuit
ID	inside diameter, identification
IEC	International Electrotechnical Commission
IEEE	Institute of Electrical and Electronics Engineers
IMS	improved motor starting
in.	inch
in. H_2O	inches of water
in. Hg	inches of mercury
in. lbs.	inch pounds
Inc.	incorporated
ind.	industrial
int.	internal
int./ext.	internal/external
I/O	input/output
IP	iron pipe
ISO	International Organization for Standardization
J	joule
JIS	Japanese Industry Standard
k	kilo (1000)
K	kelvin
kA	kiloampere
KB	kilobyte (2^{10} bytes)

kg	kilogram
kg/cm^2	kilograms per square centimeter
kgm	kilogram-meter
kg/m^3	kilograms per cubic meter
kHz	kilohertz
kJ	kilojoule
km	kilometer
kOhm, kΩ	kilo-ohm
kPa	kilopascal
kph	kilometers per hour
kV	kilovolt
kVA	kilovolt ampere
kVAR	kilovolt ampere reactive
kW	kilowatt
kWh	kilowatt-hour
kWm	kilowatt mechanical
L	liter
LAN	local area network
L x W x H	length by width by height
lb.	pound, pounds
lbm/ft^3	pounds mass per cubic feet
LCB	line circuit breaker
LCD	liquid crystal display
ld. shd.	load shed
LED	light emitting diode
Lph	liters per hour
Lpm	liters per minute
LOP	low oil pressure
LP	liquefied petroleum
LPG	liquefied petroleum gas
LS	left side
L_{wa}	sound power level, A weighted
LWL	low water level
LWT	low water temperature
m	meter, milli (1/1000)
M	mega (10^6 when used with SI units), male
m^3	cubic meter
m^3/min.	cubic meters per minute
mA	milliampere
man.	manual
max.	maximum
MB	megabyte (2^{20} bytes)
MCM	one thousand circular mils
MCCB	molded-case circuit breaker
meggar	megohmmeter
MHz	megahertz
mi.	mile
mil	one one-thousandth of an inch
min.	minimum, minute
misc.	miscellaneous
MJ	megajoule
mJ	millijoule
mm	millimeter
mOhm, mΩ	milliohm
MOhm, MΩ	megohm
MOV	metal oxide varistor
MPa	megapascal
mpg	miles per gallon
mph	miles per hour
MS	military standard
m/sec.	meters per second
MTBF	mean time between failure
MTBO	mean time between overhauls
mtg.	mounting
MW	megawatt
mW	milliwatt
μF	microfarad
N, norm.	normal (power source)
NA	not available, not applicable
nat. gas	natural gas
NBS	National Bureau of Standards
NC	normally closed
NEC	National Electrical Code
NEMA	National Electrical Manufacturers Association
NFPA	National Fire Protection Association
Nm	newton meter
NO	normally open
no., nos.	number, numbers
NPS	National Pipe, Straight
NPSC	National Pipe, Straight-coupling
NPT	National Standard taper pipe thread per general use
NPTF	National Pipe, Taper-Fine
NR	not required, normal relay
ns	nanosecond
OC	overcrank
OD	outside diameter
OEM	original equipment manufacturer
OF	overfrequency
opt.	option, optional
OS	oversize, overspeed
OSHA	Occupational Safety and Health Administration
OV	overvoltage
oz.	ounce
p., pp.	page, pages
PC	personal computer
PCB	printed circuit board
pF	picofarad
PF	power factor
ph., ∅	phase
PHC	Phillips head crimptite (screw)
PHH	Phillips hex head (screw)
PHM	pan head machine (screw)
PLC	programmable logic control
PMG	permanent-magnet generator
pot	potentiometer, potential
ppm	parts per million
PROM	programmable read-only memory
psi	pounds per square inch
pt.	pint
PTC	positive temperature coefficient
PTO	power takeoff
PVC	polyvinyl chloride
qt.	quart
qty.	quantity
R	replacement (emergency) power source
rad.	radiator, radius
RAM	random access memory
RDO	relay driver output
ref.	reference
rem.	remote
RFI	radio frequency interference
RH	round head
RHM	round head machine (screw)
rly.	relay
rms	root mean square
rnd.	round
ROM	read only memory
rot.	rotate, rotating
rpm	revolutions per minute
RS	right side
RTV	room temperature vulcanization
SAE	Society of Automotive Engineers
scfm	standard cubic feet per minute
SCR	silicon controlled rectifier
s, sec.	second
SI	*Systeme international d'unites,* International System of Units
SI/EO	side in/end out
sil.	silencer
SN	serial number
SPDT	single-pole, double-throw
SPST	single-pole, single-throw
spec, specs	specification(s)
sq.	square
sq. cm	square centimeter
sq. in.	square inch
SS	stainless steel
std.	standard
stl.	steel
tach.	tachometer
TD	time delay
TDC	top dead center
TDEC	time delay engine cooldown
TDEN	time delay emergency to normal
TDES	time delay engine start
TDNE	time delay normal to emergency
TDOE	time delay off to emergency
TDON	time delay off to normal
temp.	temperature
term.	terminal
TIF	telephone influence factor
TIR	total indicator reading
tol.	tolerance
turbo.	turbocharger
typ.	typical (same in multiple locations)
UF	underfrequency
UHF	ultrahigh frequency
UL	Underwriter's Laboratories, Inc.
UNC	unified coarse thread (was NC)
UNF	unified fine thread (was NF)
univ.	universal
US	undersize, underspeed
UV	ultraviolet, undervoltage
V	volt
VAC	volts alternating current
VAR	voltampere reactive
VDC	volts direct current
VFD	vacuum fluorescent display
VGA	video graphics adapter
VHF	very high frequency
W	watt
WCR	withstand and closing rating
w/	with
w/o	without
wt.	weight
xfmr	transformer

Use the log below to keep a cumulative record of operating hours on your generator set and the dates required services were performed. Enter hours to the nearest quarter hour.

DATE RUN	OPERATING HOURS		SERVICE RECORD	
	HOURS RUN	TOTAL HOURS	SERVICE DATE	SERVICE

KOHLER®
POWER SYSTEMS

KOHLER CO. Kohler, Wisconsin 53044
Phone 920-565-3381, Fax 920-459-1646
For the nearest sales/service outlet in the
US and Canada, phone 1-800-544-2444
KohlerPower.com

Kohler Power Systems
Asia Pacific Headquarters
7 Jurong Pier Road
Singapore 619159
Phone (65)6264-6422, Fax (65)6264-6455

TP-6252 2/08c

© 2004, 2006, 2007, and 2008 by Kohler Co. All rights reserved.