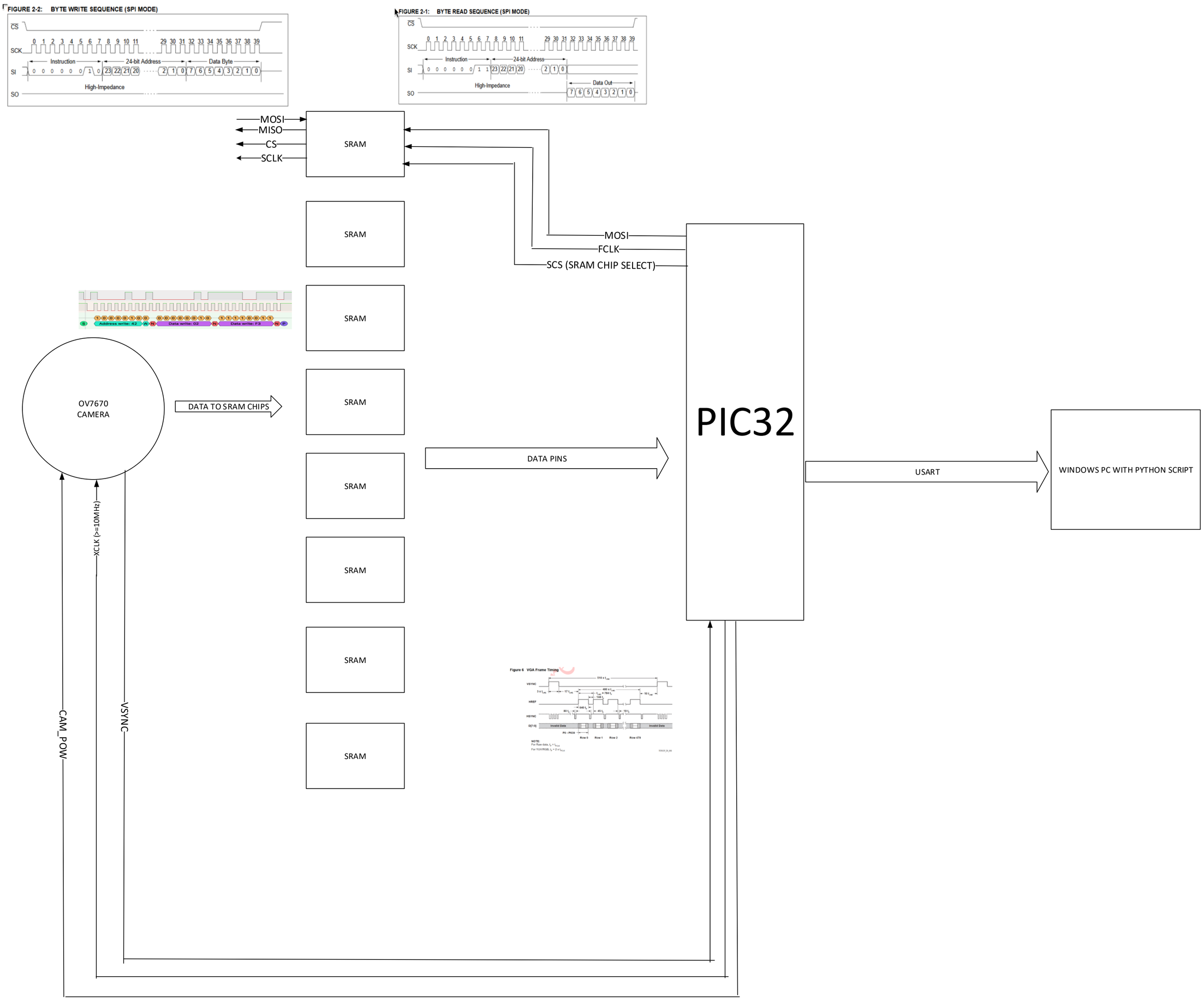
FIGURE 2-2: BYTE WRITE SEQUENCE (SPI MODE)
FIGURE 2-1: BYTE READ SEQUENCE (SPI MODE)
CS
SCK
SI
SO
Instruction
24-bit Address
Data Byte
Data Out
High-Impedance
MOSI
MISO
CS
SCLK
SRAM
SRAM
SRAM
SRAM
SRAM
SRAM
SRAM
SRAM
MOSI
FCLK
SCS (SRAM CHIP SELECT)
OV7670
CAMERA
DATA TO SRAM CHIPS
DATA PINS
PIC32
USART
WINDOWS PC WITH PYTHON SCRIPT
XCLK (>=10MHz)
CAM_POW
VSYNC