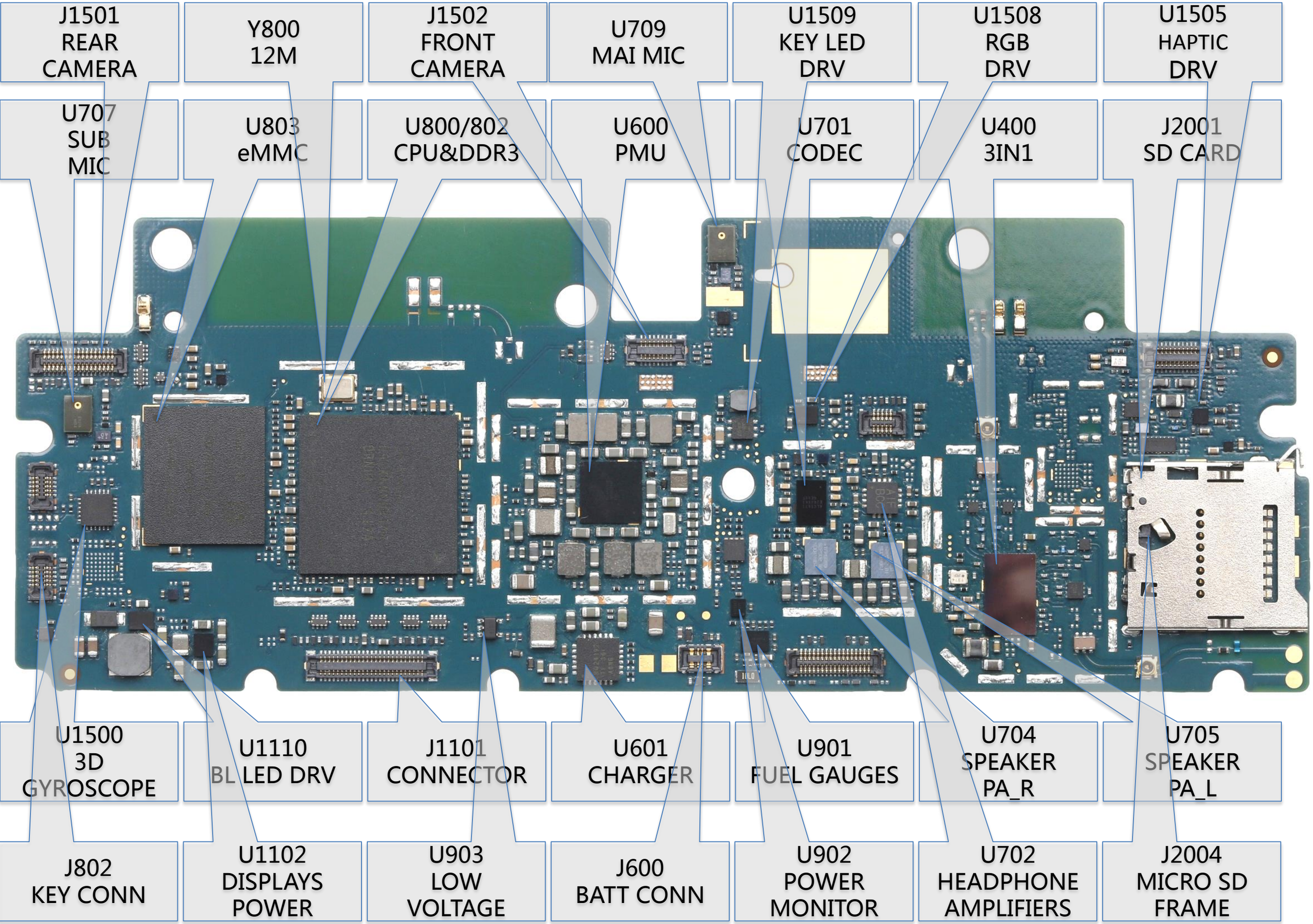
J1501 REAR CAMERA
Y800 12M
J1502 FRONT CAMERA
U709 MAI MIC
U1509 KEY LED DRV
U1508 RGB DRV
U1505 HAPTIC DRV
U707 SUB MIC
U803 eMMC
U800/802 CPU&DDR3
U600 PMU
U701 CODEC
U400 3IN1
J2001 SD CARD
U1500 3D GYROSCOPE
U1110 BL LED DRV
J1101 CONNECTOR
U601 CHARGER
U901 FUEL GAUGES
U704 SPEAKER PA_R
U705 SPEAKER PA_L
J802 KEY CONN
U1102 DISPLAYS POWER
U903 LOW VOLTAGE
J600 BATT CONN
U902 POWER MONITOR
U702 HEADPHONE AMPLIFIERS
J2004 MICRO SD FRAME

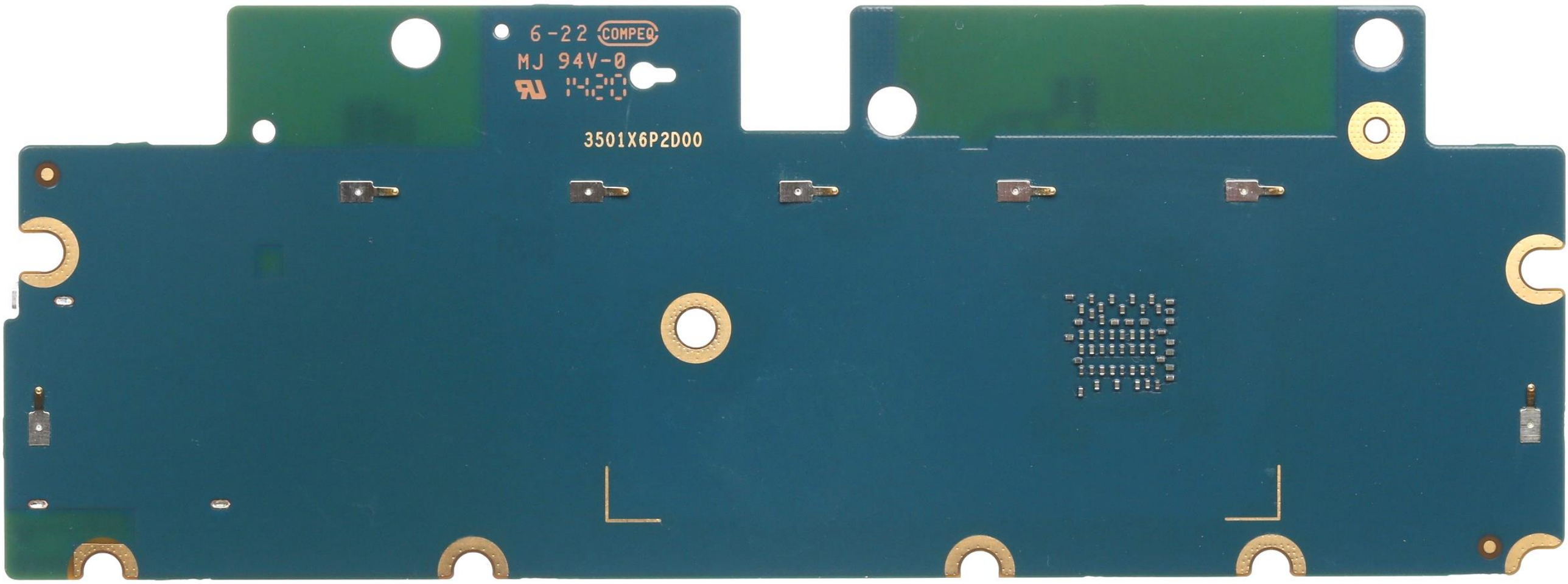
6-22 COMPEQ
MJ 94V-0
3501X6P2D00

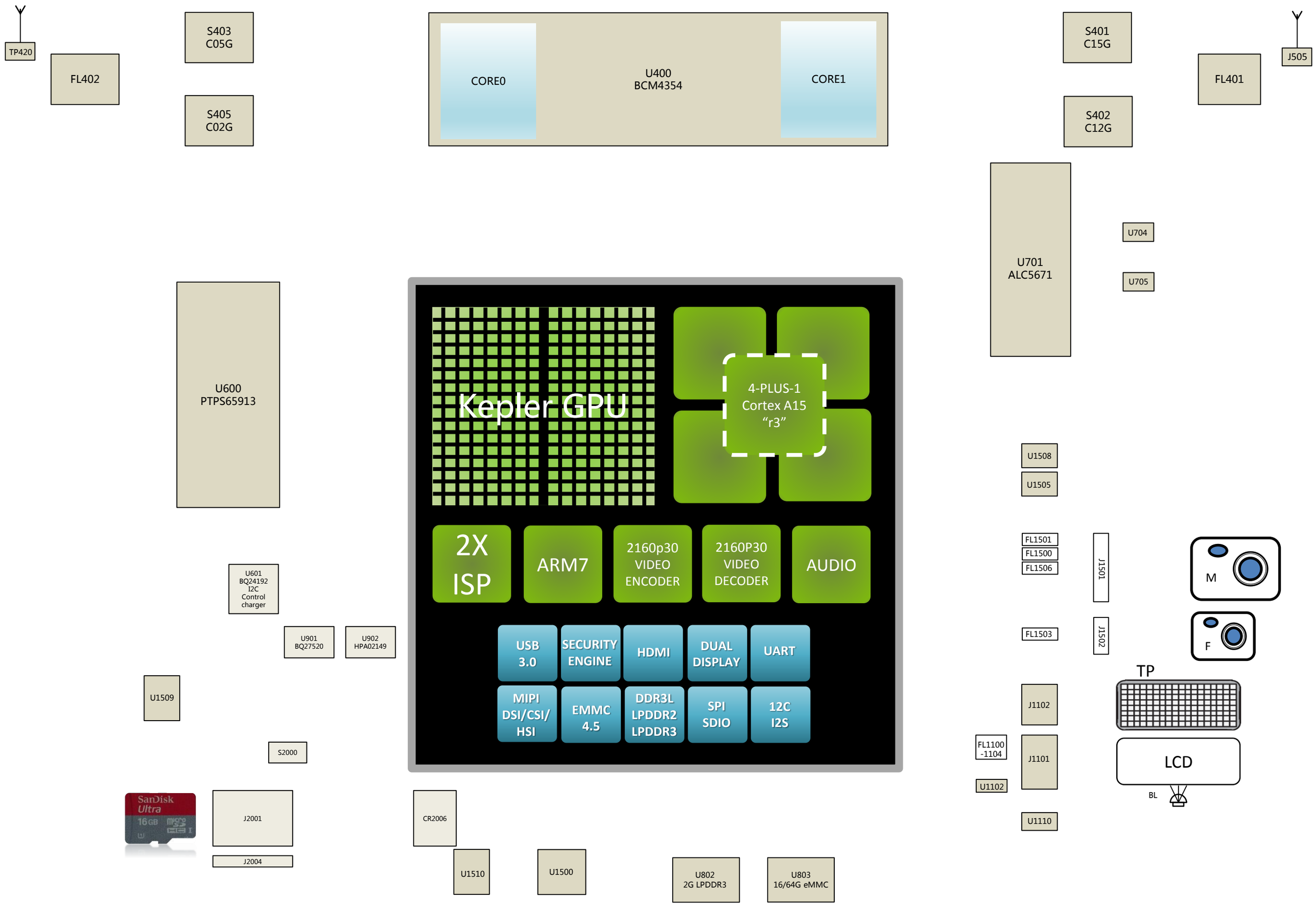
TP420
FL402
S403
C05G
S405
C02G
CORE0
U400
BCM4354
CORE1
S401
C15G
S402
C12G
FL401
J505
U701
ALC5671
U704
U705
U600
PTPS65913
Kepler GPU
4-PLUS-1
Cortex A15
"r3"
2X
ISP
ARM7
2160p30
VIDEO
ENCODER
2160P30
VIDEO
DECODER
AUDIO
USB
3.0
SECURITY
ENGINE
HDMI
DUAL
DISPLAY
UART
MIPI
DSI/CSI/
HSI
EMMC
4.5
DDR3L
LPDDR2
LPDDR3
SPI
SDIO
12C
I2S
U601
BQ24192
I2C
Control
charger
U901
BQ27520
U902
HPA02149
U1509
S2000
SanDisk
Ultra
16GB
J2001
J2004
CR2006
U1510
U1500
U802
2G LPDDR3
U803
16/64G eMMC
U1508
U1505
FL1501
FL1500
FL1506
J1501
FL1503
J1502
M
F
TP
J1102
FL1100
-1104
J1101
U1102
LCD
BL
U1110

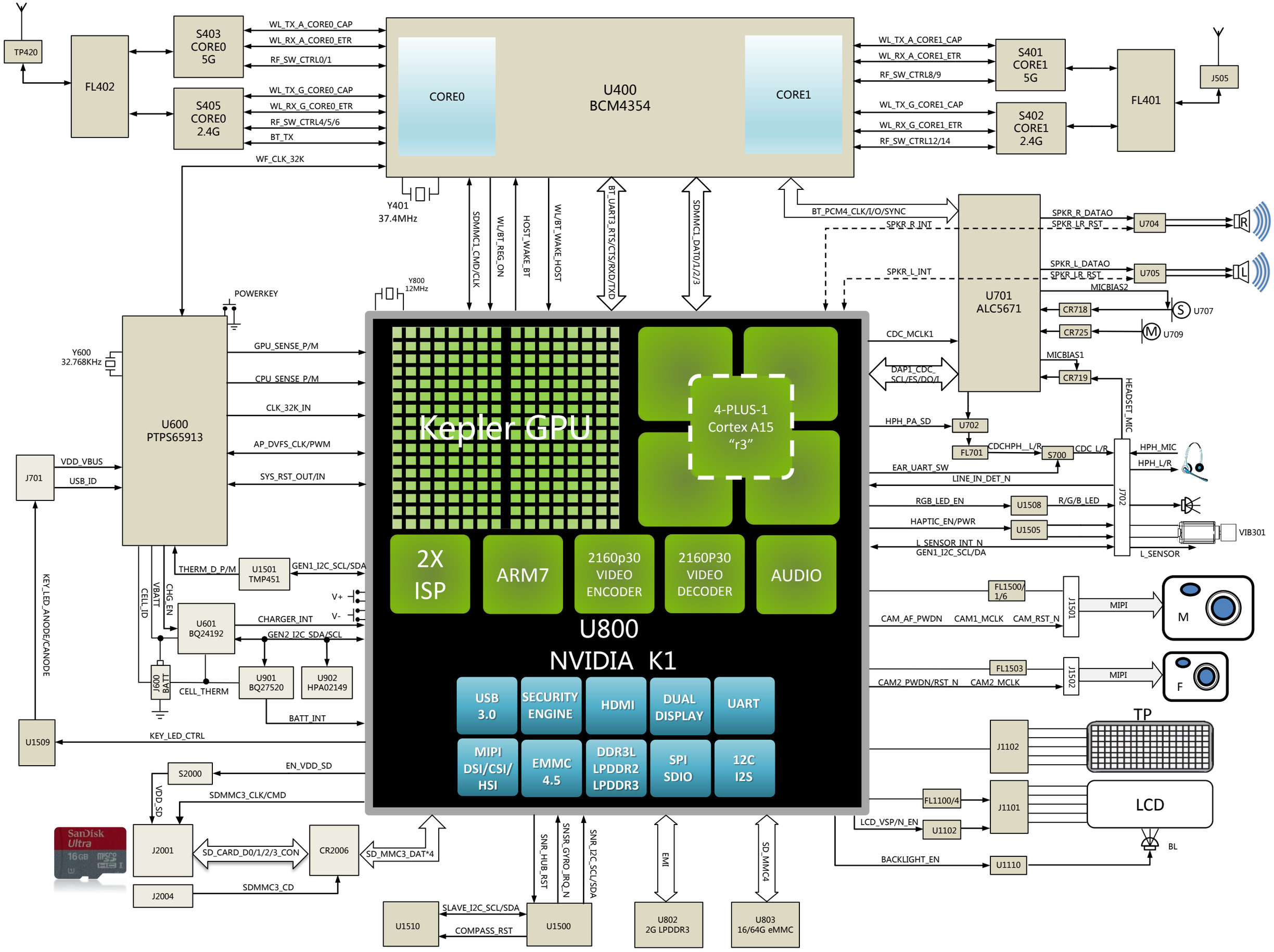
TP420
FL402
S403 CORE0 5G
S405 CORE0 2.4G
WL_TX_A_CORE0_CAP
WL_RX_A_CORE0_ETR
RF_SW_CTRL0/1
WL_TX_G_CORE0_CAP
WL_RX_G_CORE0_ETR
RF_SW_CTRL4/5/6
BT_TX
WF_CLK_32K
CORE0
U400 BCM4354
CORE1
WL_TX_A_CORE1_CAP
WL_RX_A_CORE1_ETR
RF_SW_CTRL8/9
WL_TX_G_CORE1_CAP
WL_RX_G_CORE1_ETR
RF_SW_CTRL12/14
S401 CORE1 5G
S402 CORE1 2.4G
FL401
J505
Y401 37.4MHz
SDMMC1_CMD/CLK
WL/BT_REG_ON
HOST_WAKE_BT
WL/BT_WAKE_HOST
BT_UART3_RTS/CTS/RXD/TXD
SDMMC1_DAT0/1/2/3
BT_PCM4_CLK/I/O/SYNC
SPKR_R_INT
SPKR_L_INT
SPKR_R_DATAO
SPKR_LR_RST
U704
SPKR_L_DATAO
SPKR_LR_RST
U705
MICBIAS2
U701 ALC5671
CR718
U707
CR725
U709
CDC_MCLK1
MICBIAS1
CR719
DAP1_CDC_ SCL/FS/DO/I
HEADSET_MIC
HPH_PA_SD
U702
FL701
CDCHPH_L/R
S700
CDC_L/R
HPH_MIC
HPH_L/R
EAR_UART_SW
LINE_IN_DET_N
J702
RGB_LED_EN
U1508
R/G/B_LED
HAPTIC_EN/PWR
U1505
VIB301
L_SENSOR_INT_N
GEN1_I2C_SCL/DA
L_SENSOR
FL1500/ 1/6
J1501
MIPI
CAM_AF_PWDN
CAM1_MCLK
CAM_RST_N
M
FL1503
J1502
CAM2_PWDN/RST_N
CAM2_MCLK
F
TP
J1102
FL1100/4
J1101
LCD
LCD_VSP/N_EN
U1102
BL
BACKLIGHT_EN
U1110
POWERKEY
Y800 12MHz
Y600 32.768KHz
U600 PTPS65913
GPU_SENSE_P/M
CPU_SENSE_P/M
CLK_32K_IN
AP_DVFS_CLK/PWM
SYS_RST_OUT/IN
J701
VDD_VBUS
USB_ID
KEY_LED_ANODE/CANODE
U1509
KEY_LED_CTRL
Kepler GPU
4-PLUS-1 Cortex A15 "r3"
2X ISP
ARM7
2160p30 VIDEO ENCODER
2160P30 VIDEO DECODER
AUDIO
U800 NVIDIA K1
USB 3.0
SECURITY ENGINE
HDMI
DUAL DISPLAY
UART
MIPI DSI/CSI/ HSI
EMMC 4.5
DDR3L LPDDR2 LPDDR3
SPI SDIO
I2C I2S
THERM_D_P/M
U1501 TMP451
GEN1_I2C_SCL/SDA
CELL_ID
VBATT
CHG_EN
U601 BQ24192
V+
V-
CHARGER_INT
GEN2_I2C_SDA/SCL
J900 BATT
CELL_THERM
U901 BQ27520
U902 HPA02149
BATT_INT
S2000
EN_VDD_SD
VDD_SD
SDMMC3_CLK/CMD
SanDisk Ultra 16GB
J2001
SD_CARD_D0/1/2/3_CON
CR2006
SD_MMC3_DAT*4
J2004
SDMMC3_CD
SNR_HUB_RST
SNSR_GYRO_IRQ_N
SNR_I2C_SCL/SDA
U1510
SLAVE_I2C_SCL/SDA
COMPASS_RST
U1500
EMI
U802 2G LPDDR3
SD_MMC4
U803 16/64G eMMC

VIETMOBILE.VN

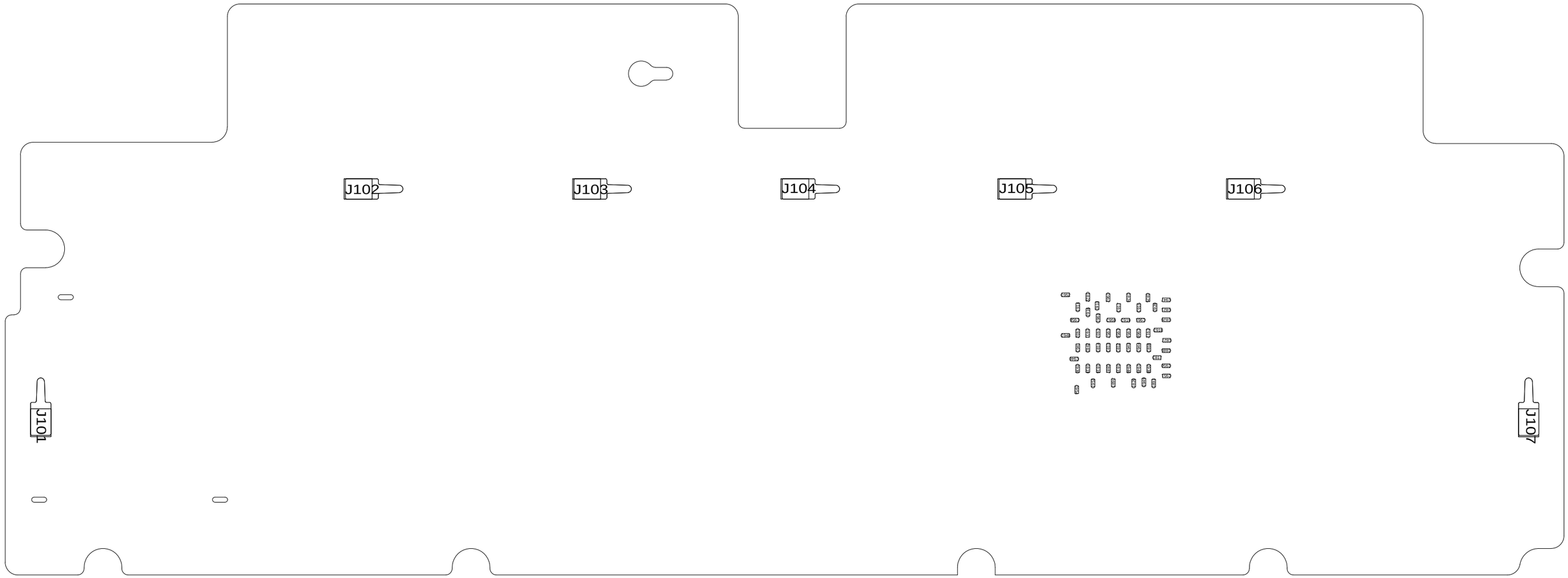

VIETMOBILE.VN

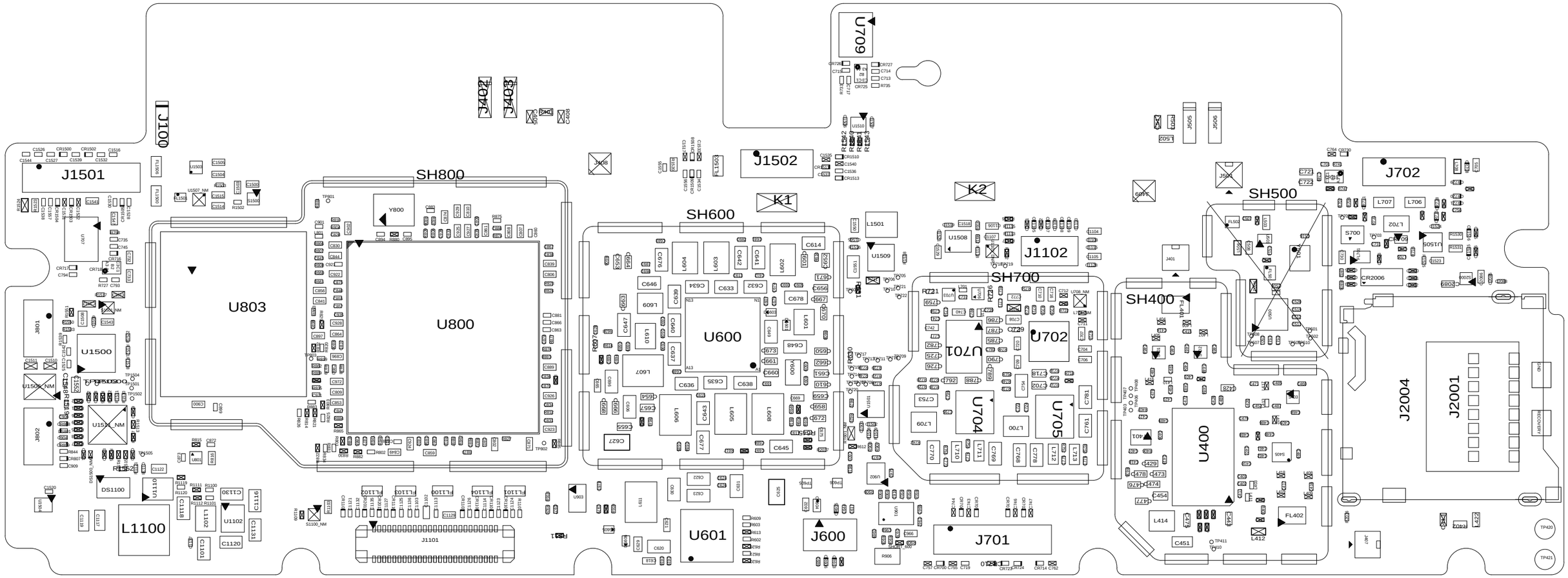

X6 RevA 3501X6M000A BOTTOM LAYER

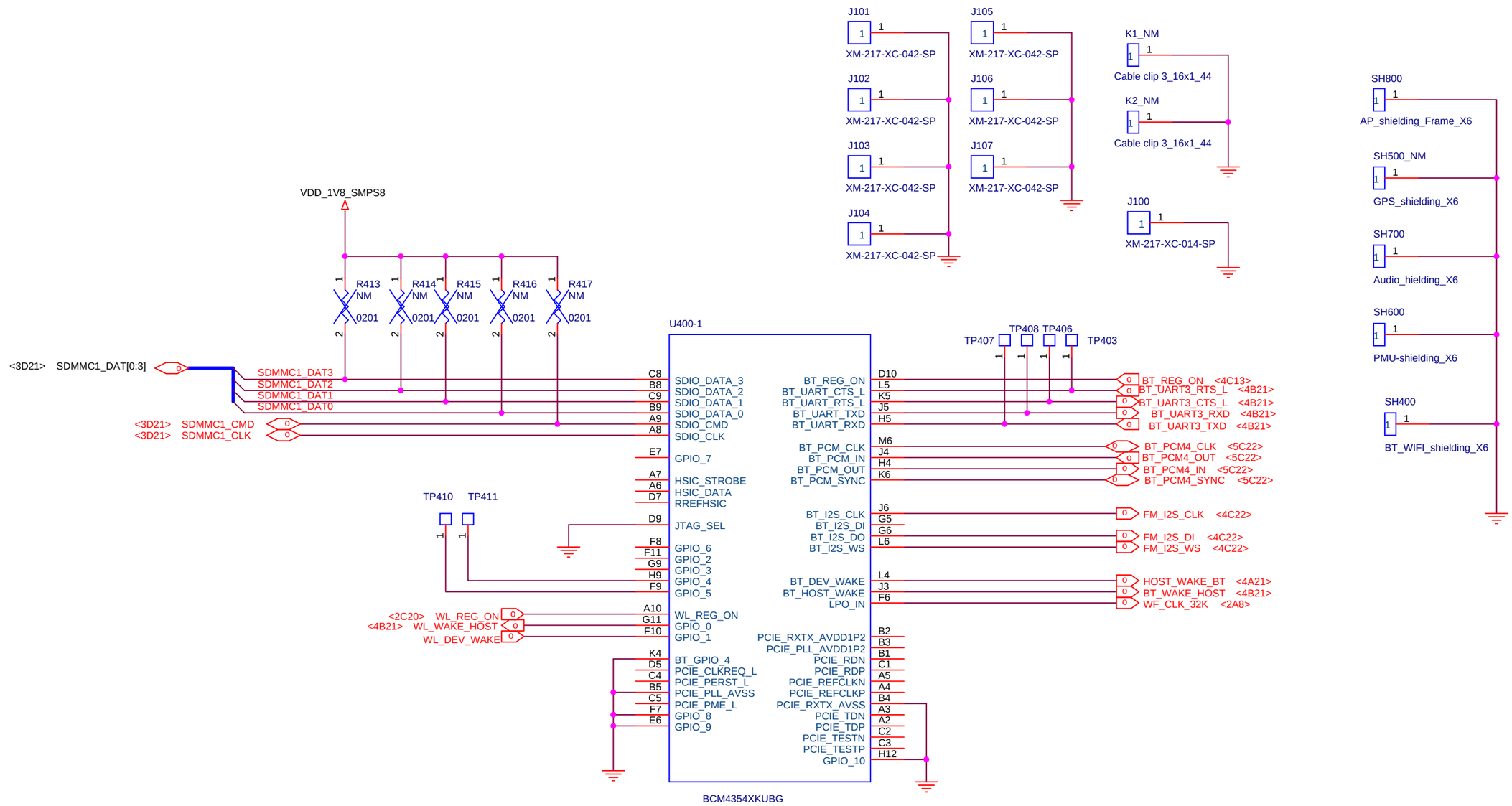

BT/WIFI INTERFACE

Title	MI-THREE	
Size A3	Document Number <Doc>	Rev P2B
Date:	Sheet 1 of 26	

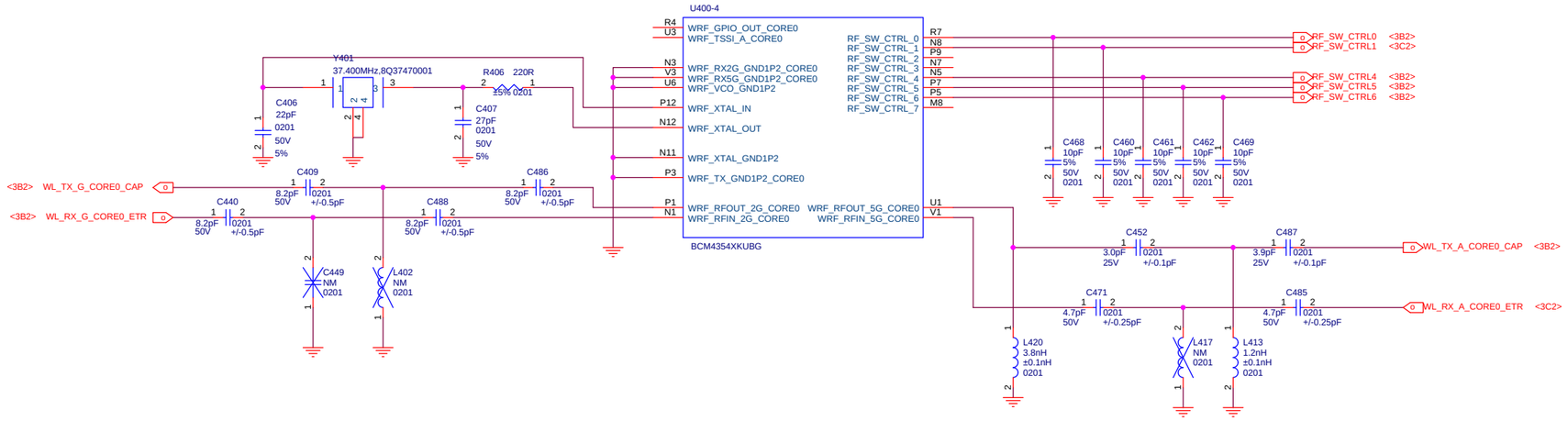

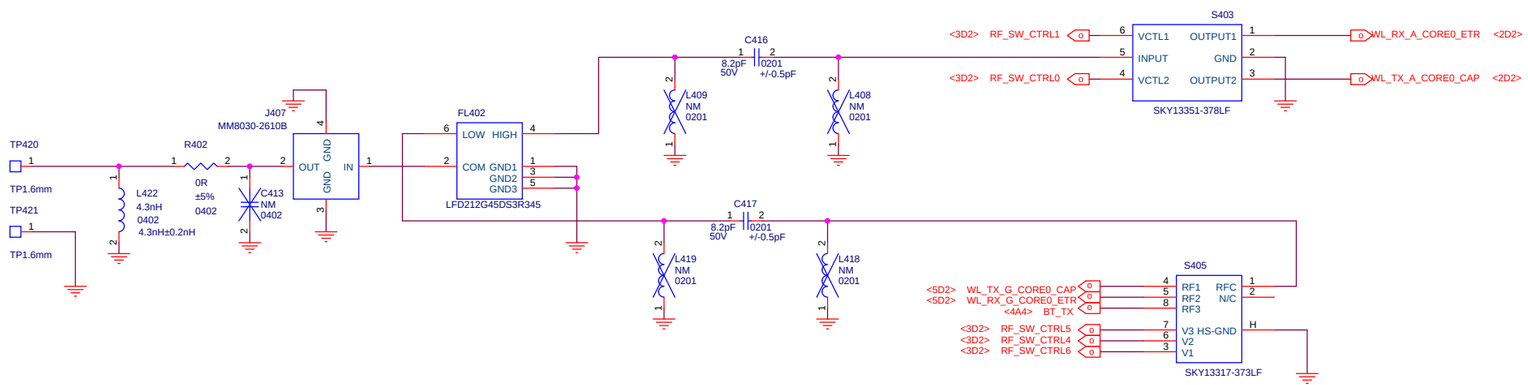

Title	MI-THREE	
Size A2	Document Number <Doc>	Rev P2B
Date:	Sheet 2 of 26	

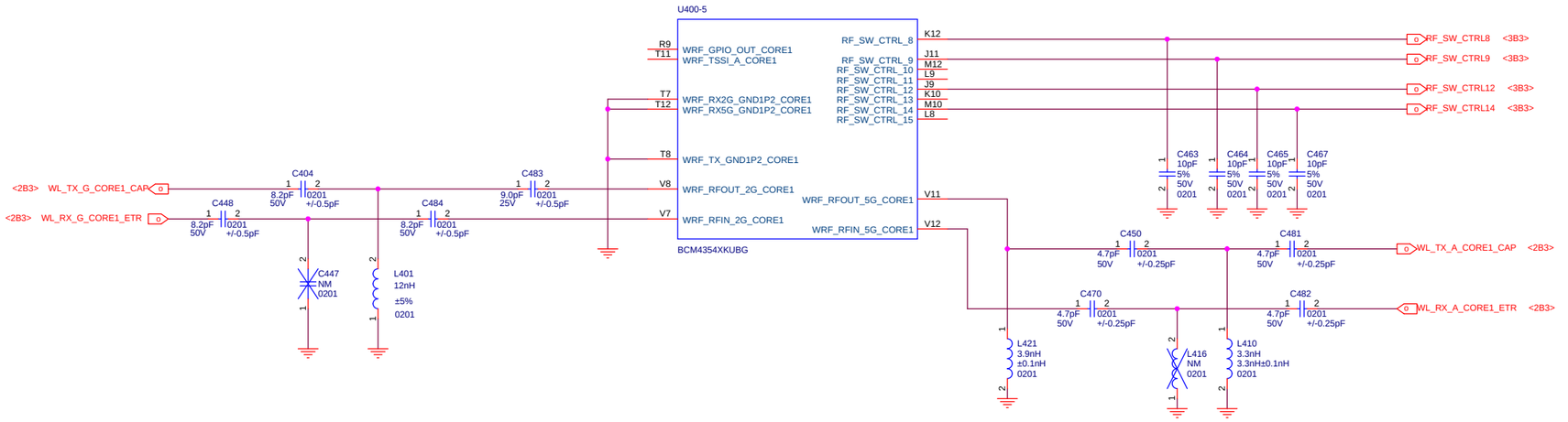

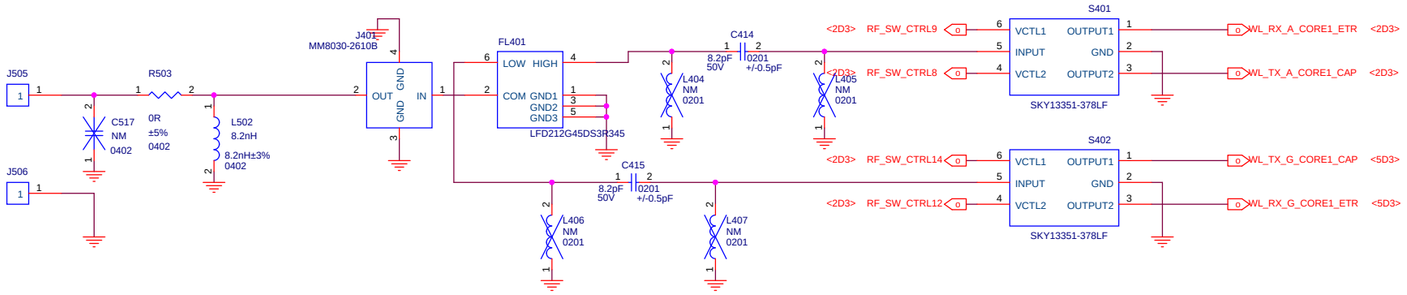

Title	MI-THREE	
Size A2	Document Number <Doc>	Rev P2B
Date:	Sheet 3 of 26	

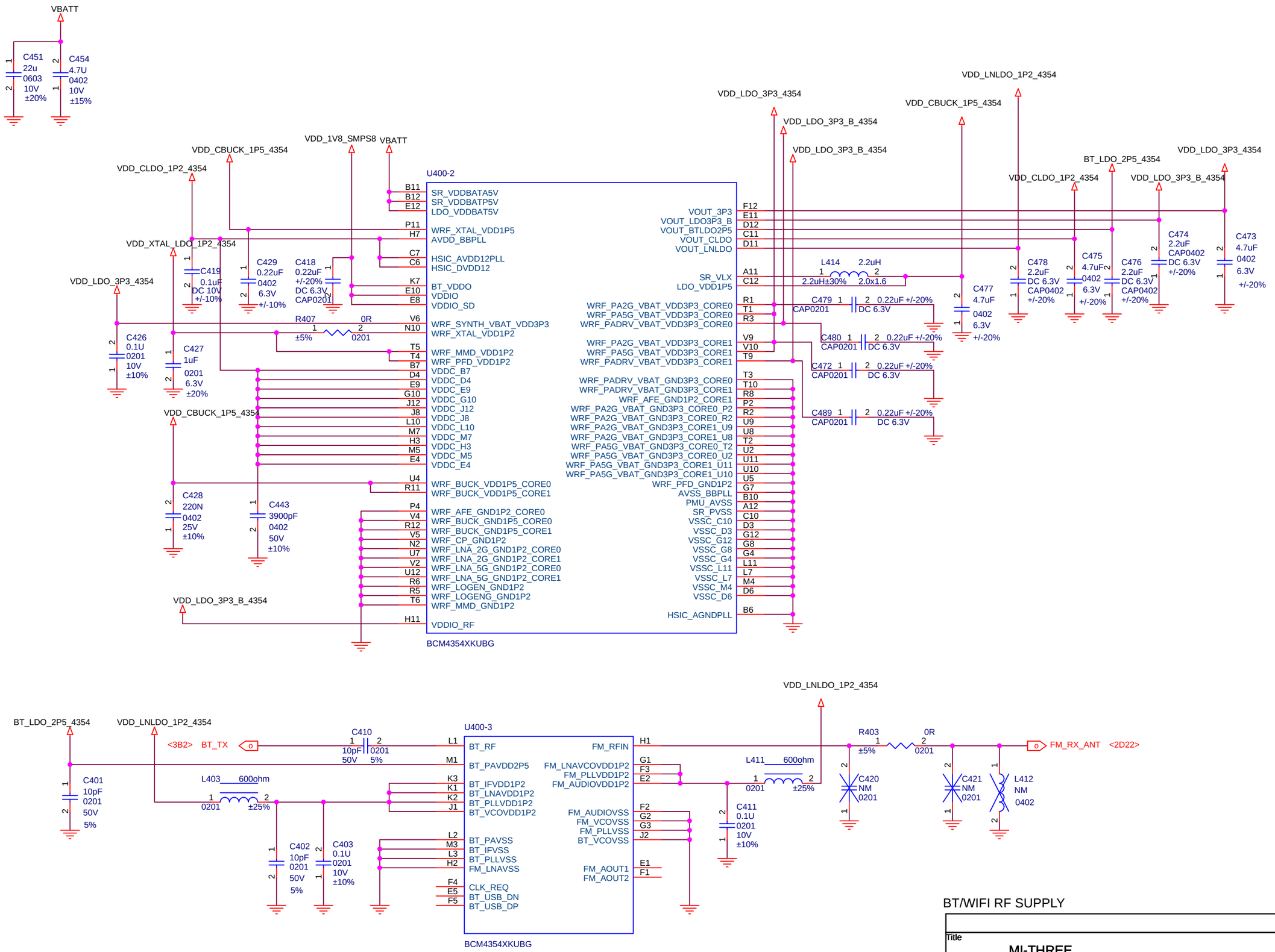

BT/WIFI RF SUPPLY

Title	MI-THREE	
Size A3	Document Number <Doc>	Rev P2B
Date:	Sheet 4 of 26	

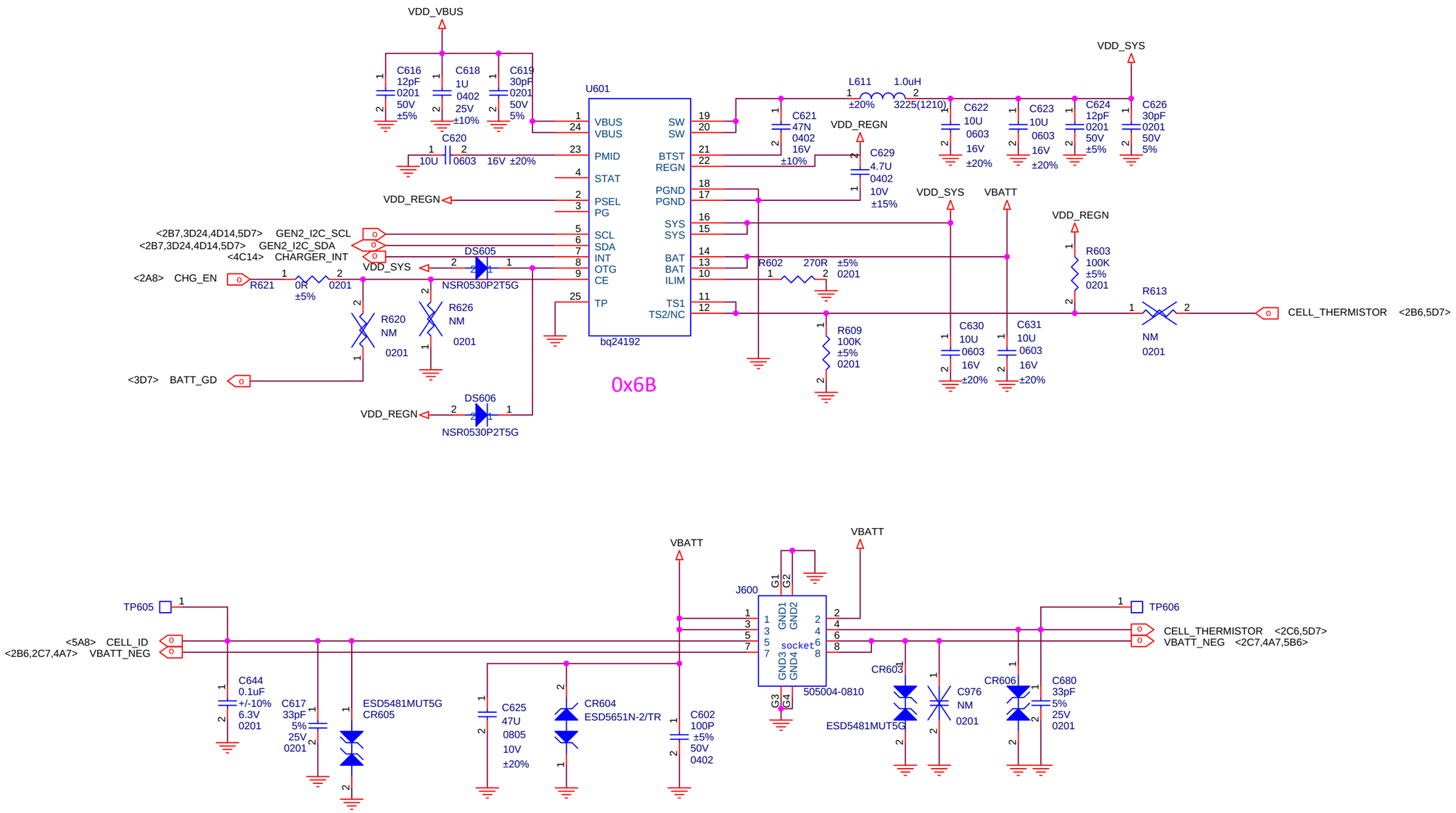

CHARGER

Title	MI-THREE
Size A3	Document Number <Doc>
Rev	P2B
Date:	Sheet 6 of 26

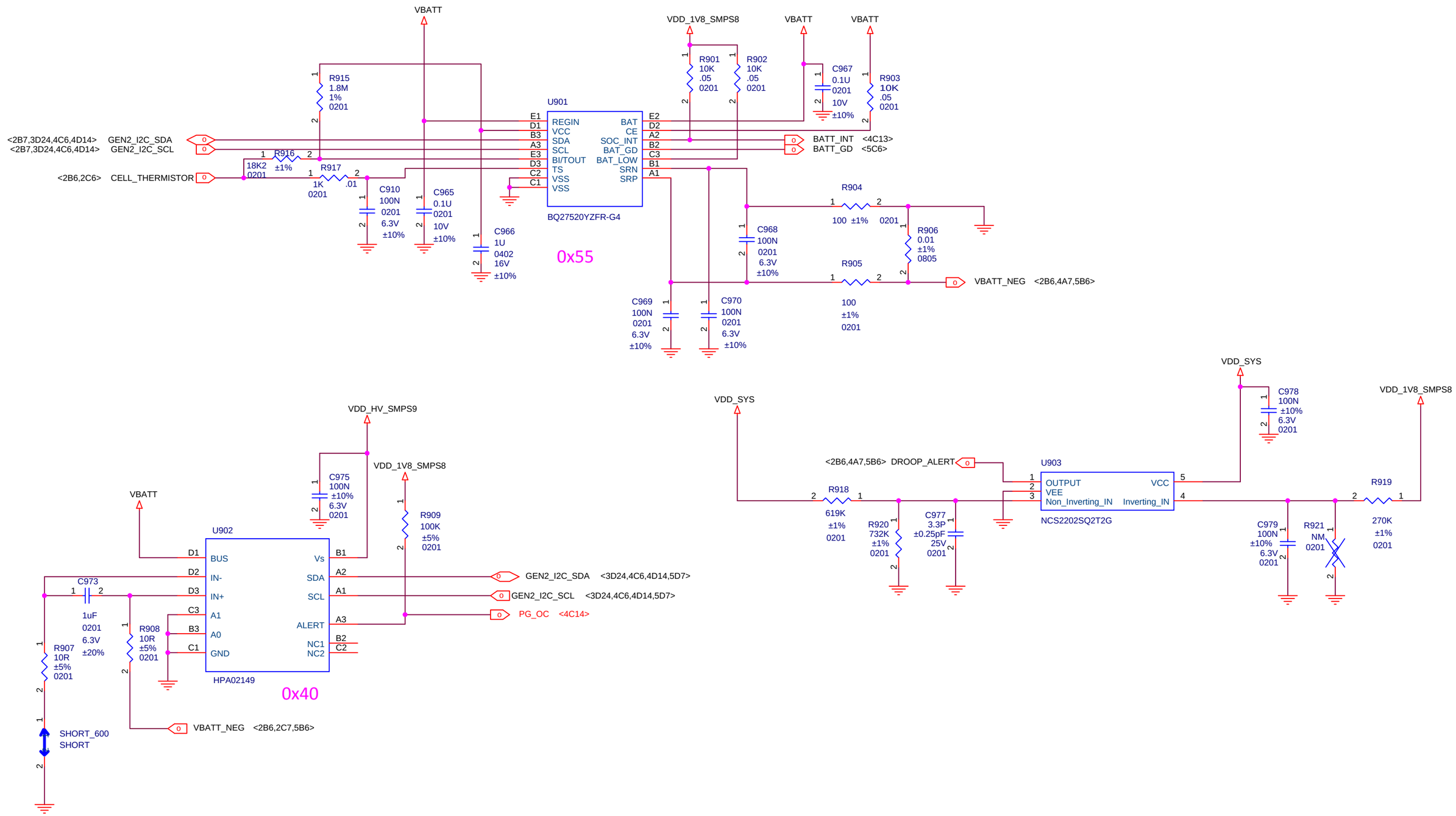

FLASH&HAPTIC

Title	MI-THREE	
Size A3	Document Number <Doc>	Rev P2B
Date:	Sheet 7 of 26	

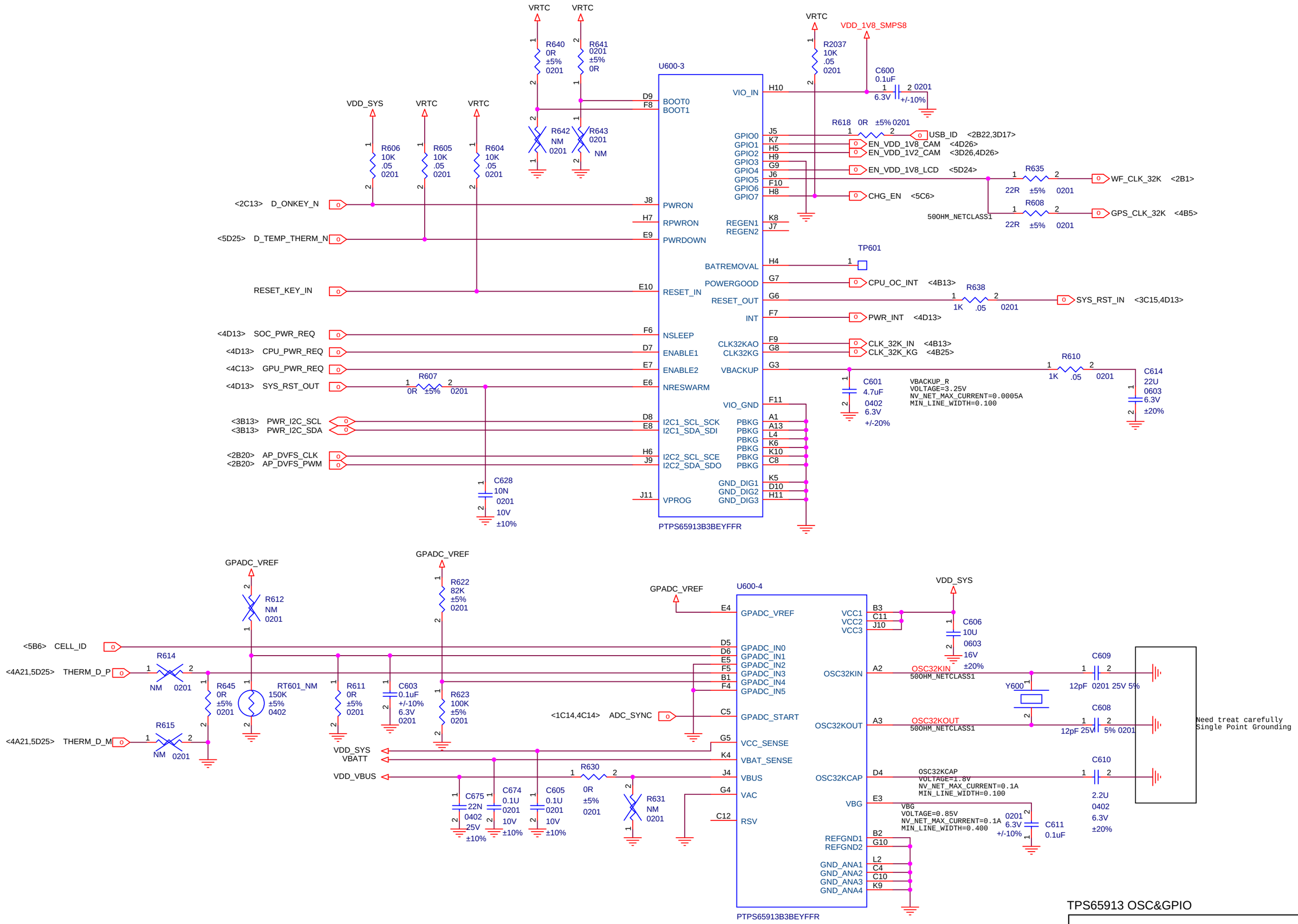

TPS65913 OSC&GPIO

Title	MI-THREE	
Size A3	Document Number <Doc>	Rev P2B
Date:	Sheet 8 of 26	

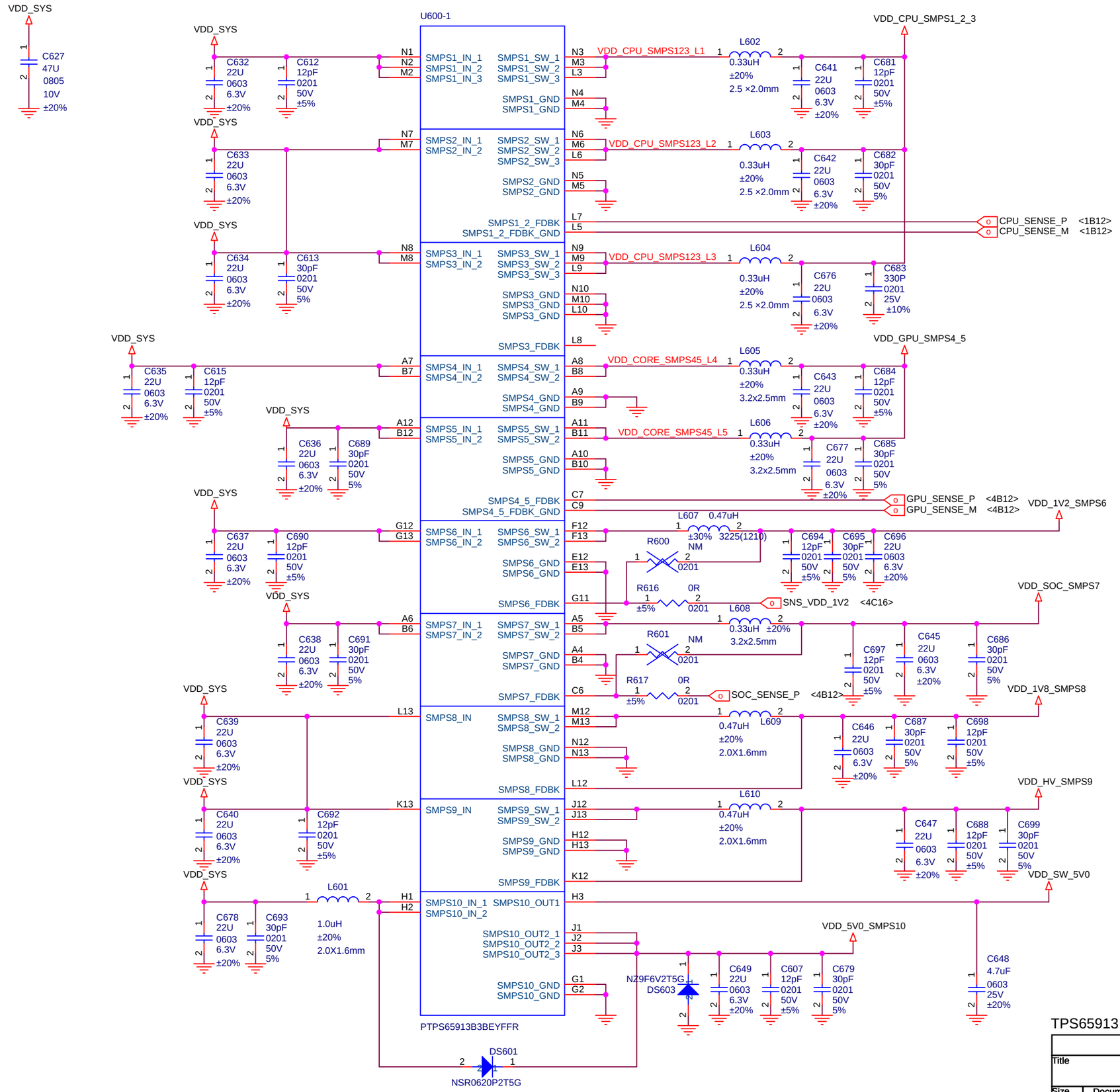

TPS65913 SMPS

Title	MI-THREE
Size A3	Document Number <Doc>
Rev	P2B
Date:	Sheet 9 of 26

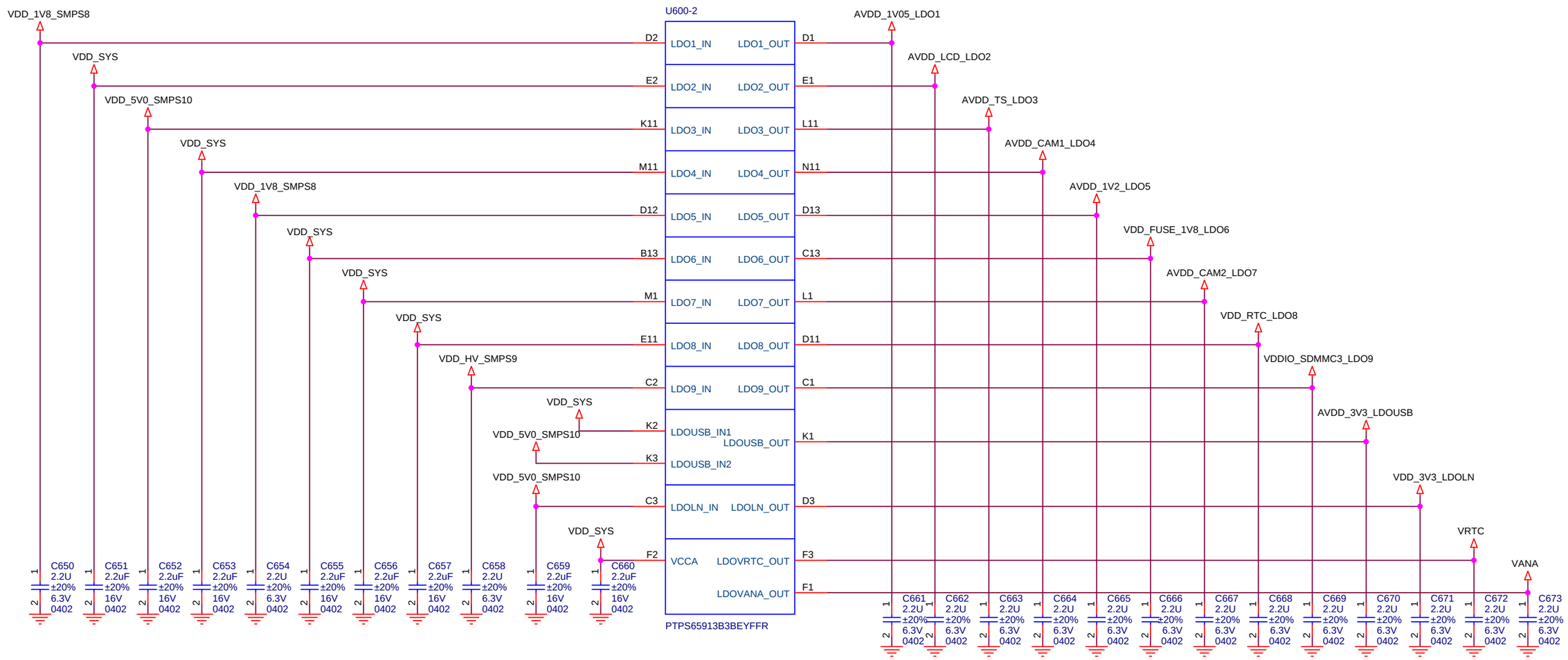

TPS65913 LDO

Title	MI-THREE	
Size A3	Document Number <Doc>	Rev P2B
Date:	Sheet 10 of 26	

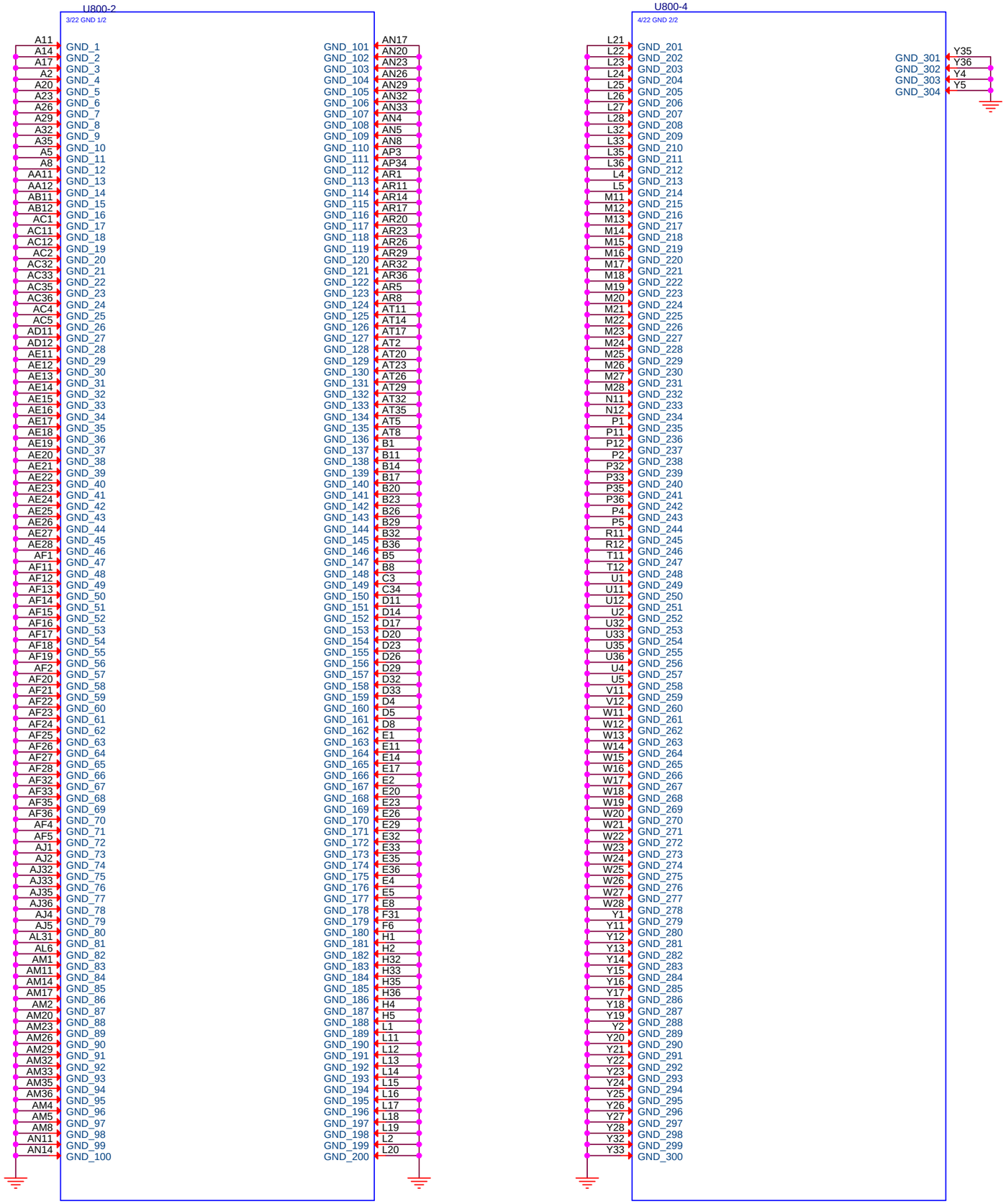

AP40-3 GND

Title	MI-THREE	
Size A3	Document Number <Doc>	Rev P2B
Date:	Sheet 11 of 26	

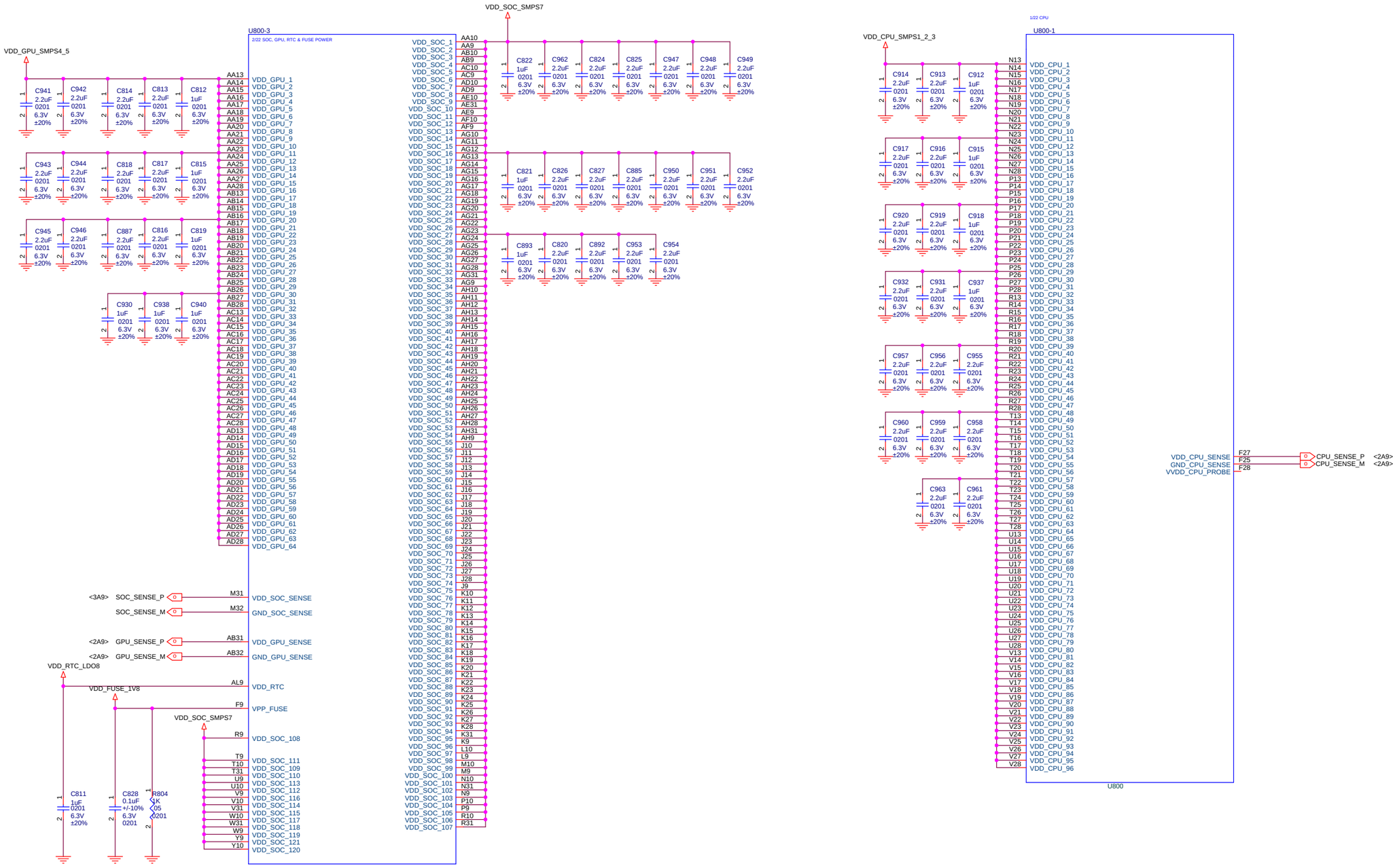

AP40-4 CORE&CPU

Title	MI-THREE	
Size A2	Document Number <Doc>	Rev P2B
Date:	Sheet 12 of 26	

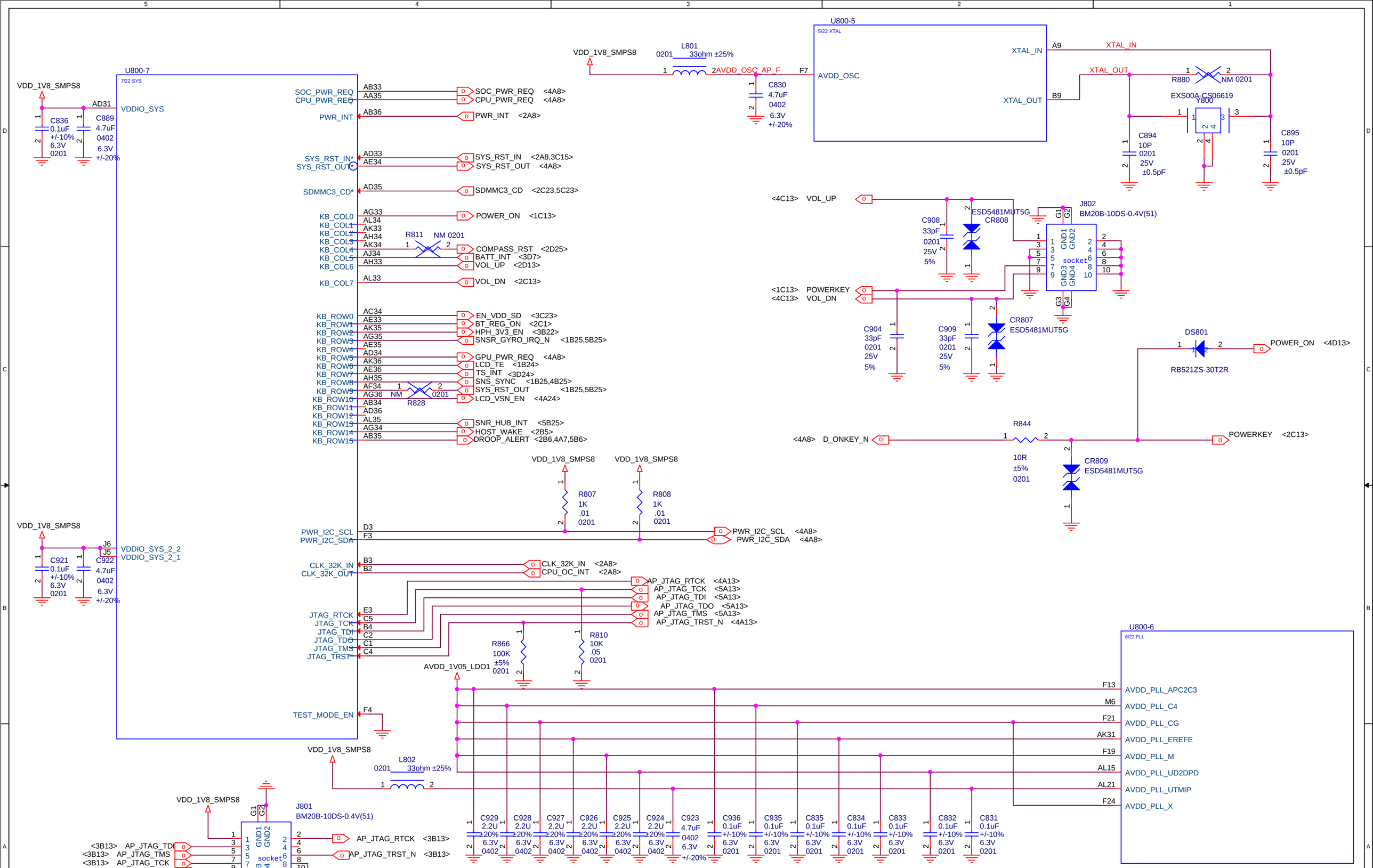

AP40-5 OSC PLL&SYS

Title	MI-THREE	
Size A3	Document Number <Doc>	Rev P2B
Date:	Sheet 13 of 26	

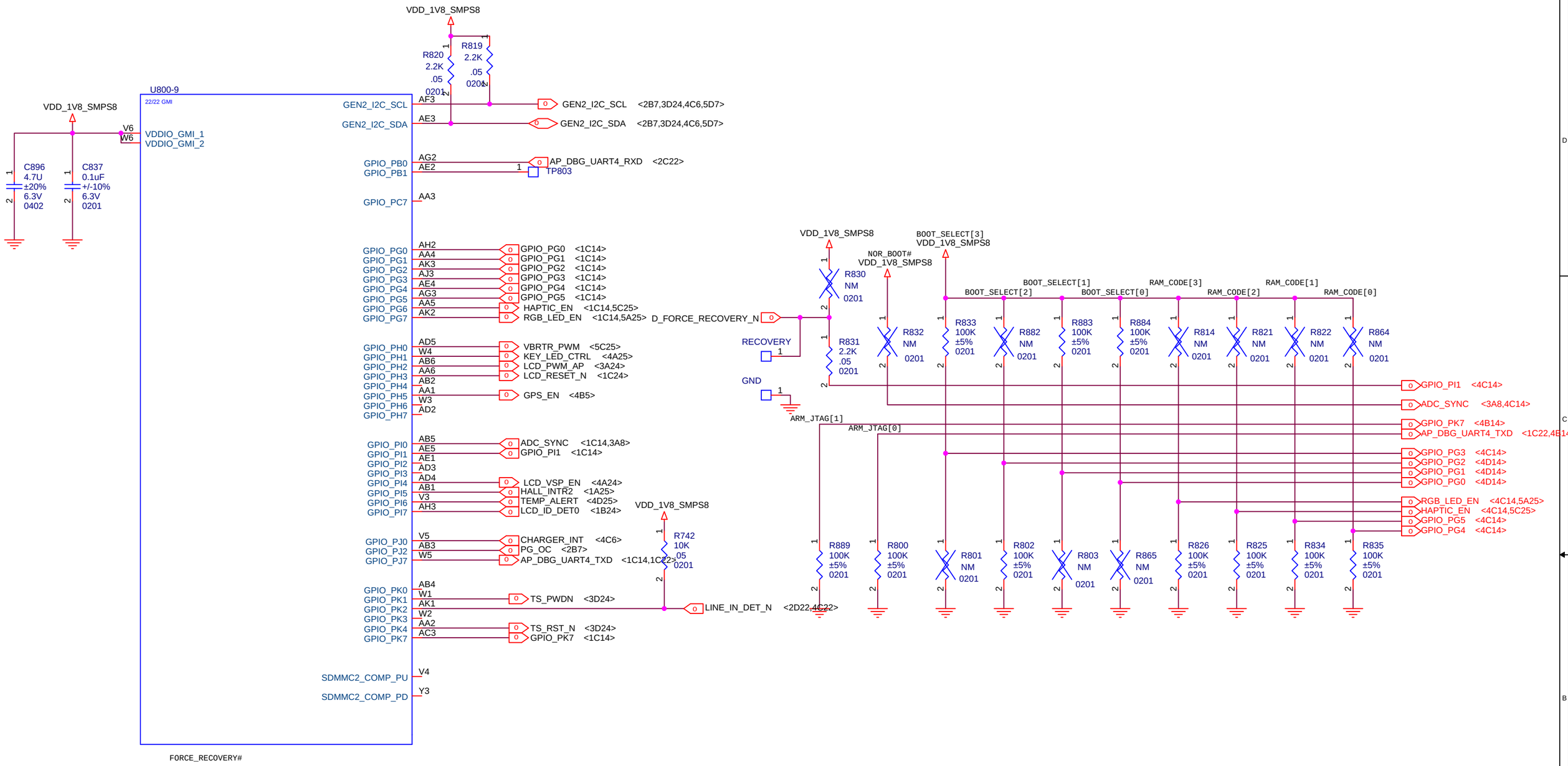

AP40-6 GMI

Title	MI-THREE	
Size A3	Document Number <Doc>	Rev P2B
Date:	Sheet 14 of 26	

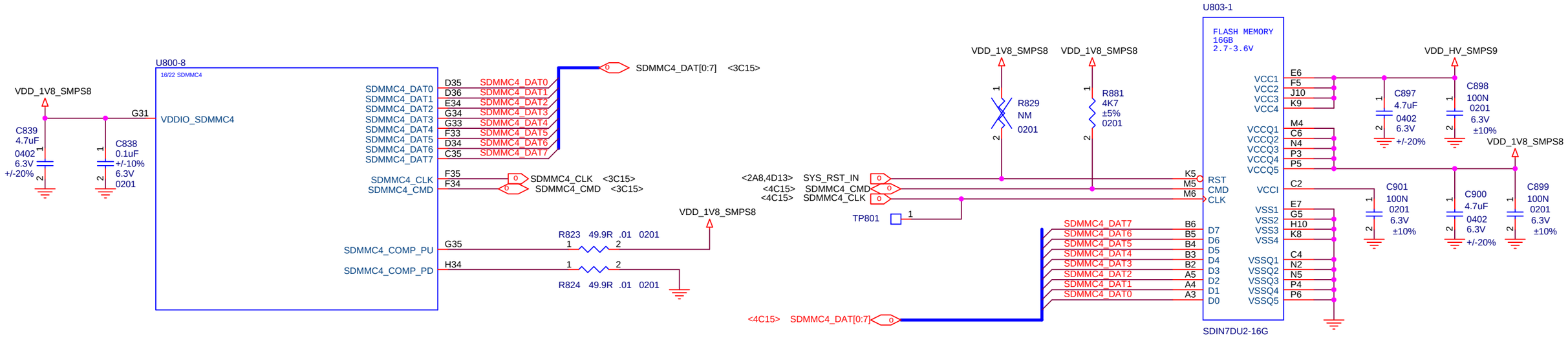

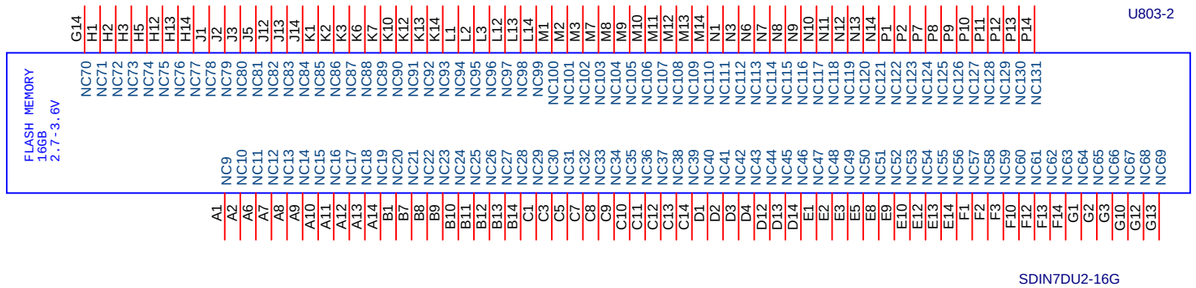

AP40 EMMC

Title	MI-THREE	
Size A3	Document Number <Doc>	Rev P2B
Date:	Sheet 15 of 26	

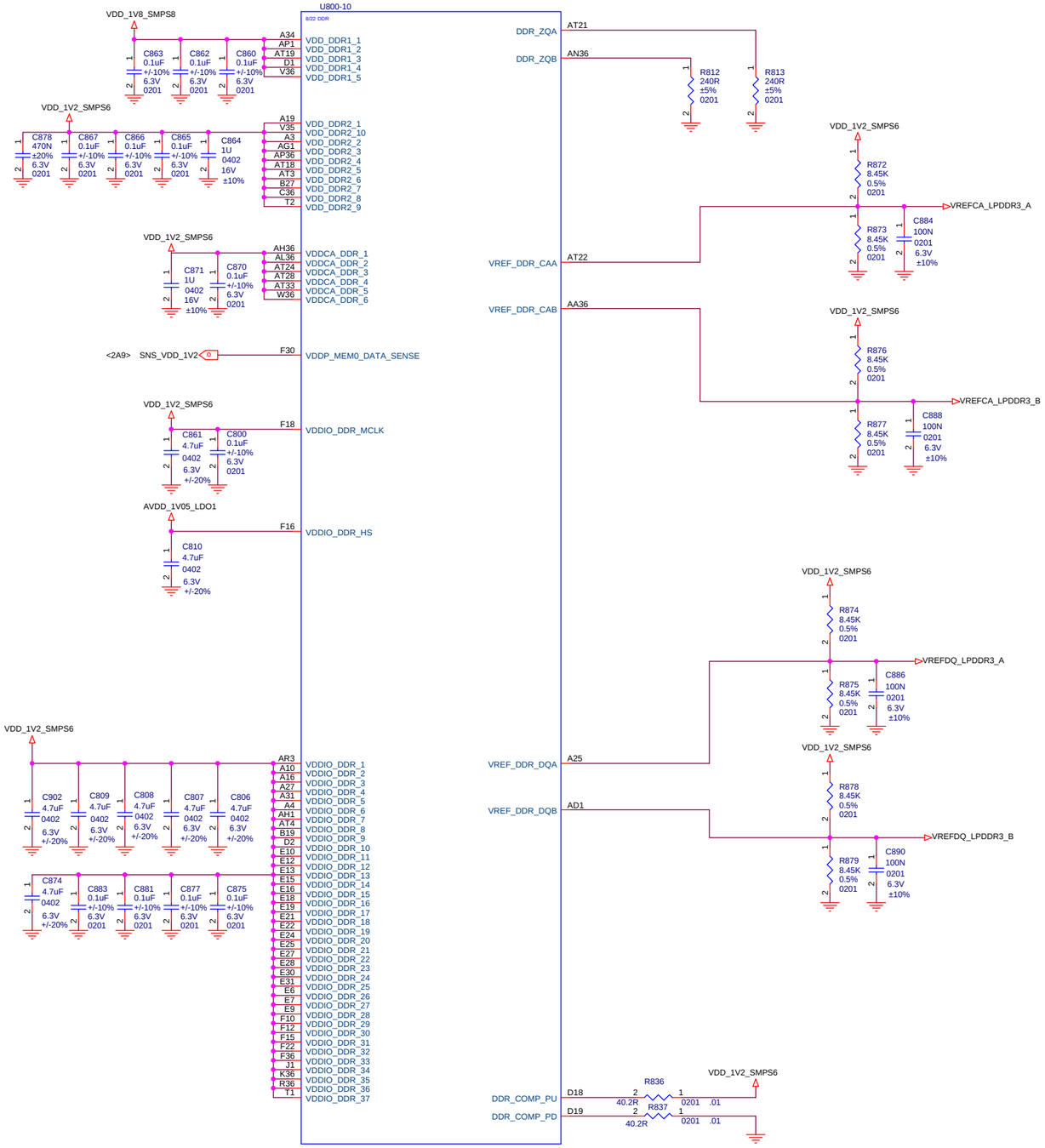

Title	MI-THREE	
Size A2	Document Number <Doc>	Rev P2B
Date:	Sheet 16 of 26	

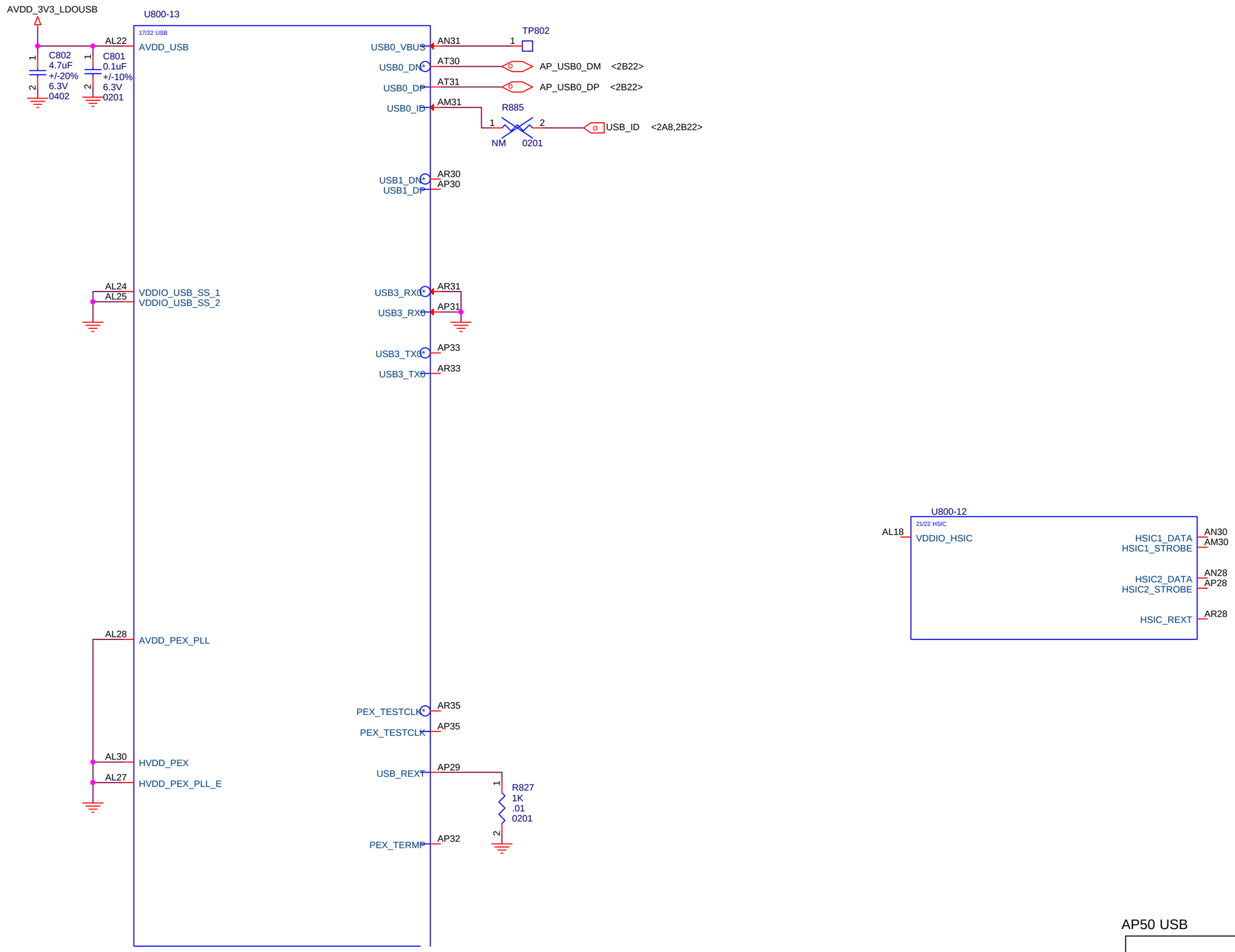

AP50 USB

Title	MI-PAD	
Size A3	Document Number <Doc>	Rev P2B
Date:	Sheet 17 of 26	

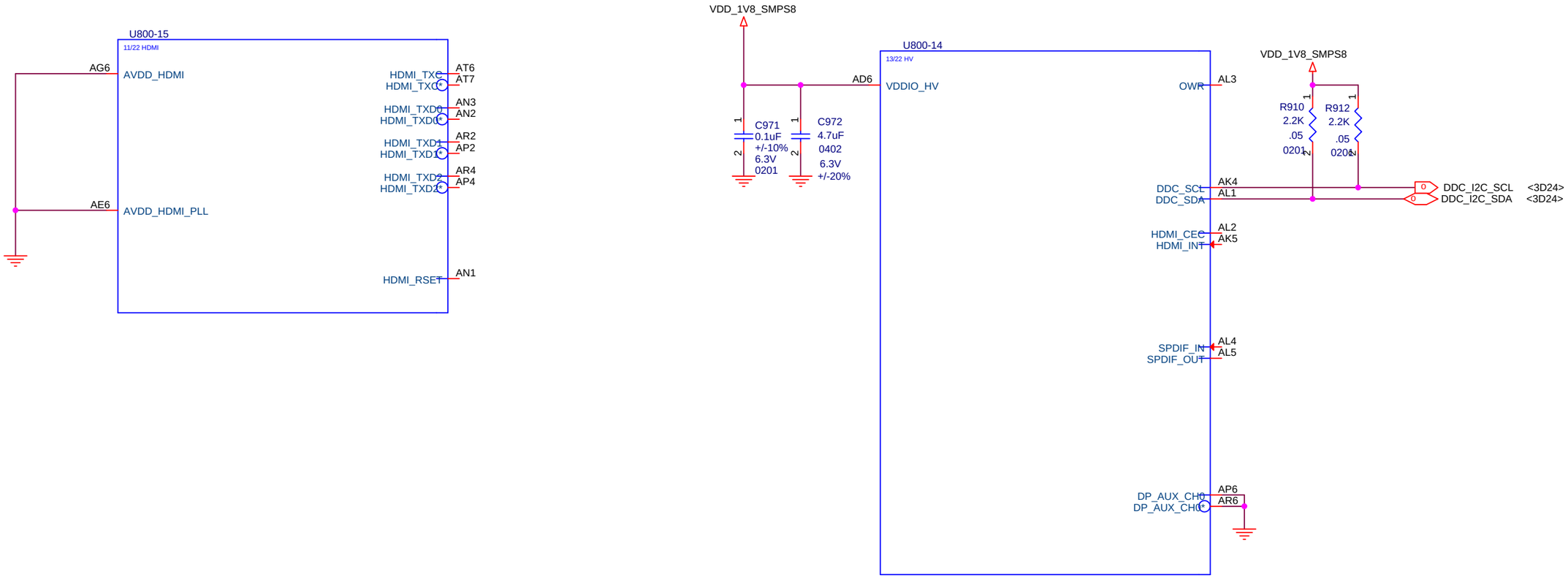

HDMI

Title	MI-THREE	
Size A3	Document Number <Doc>	Rev P2B
Date:	Sheet 18 of 26	

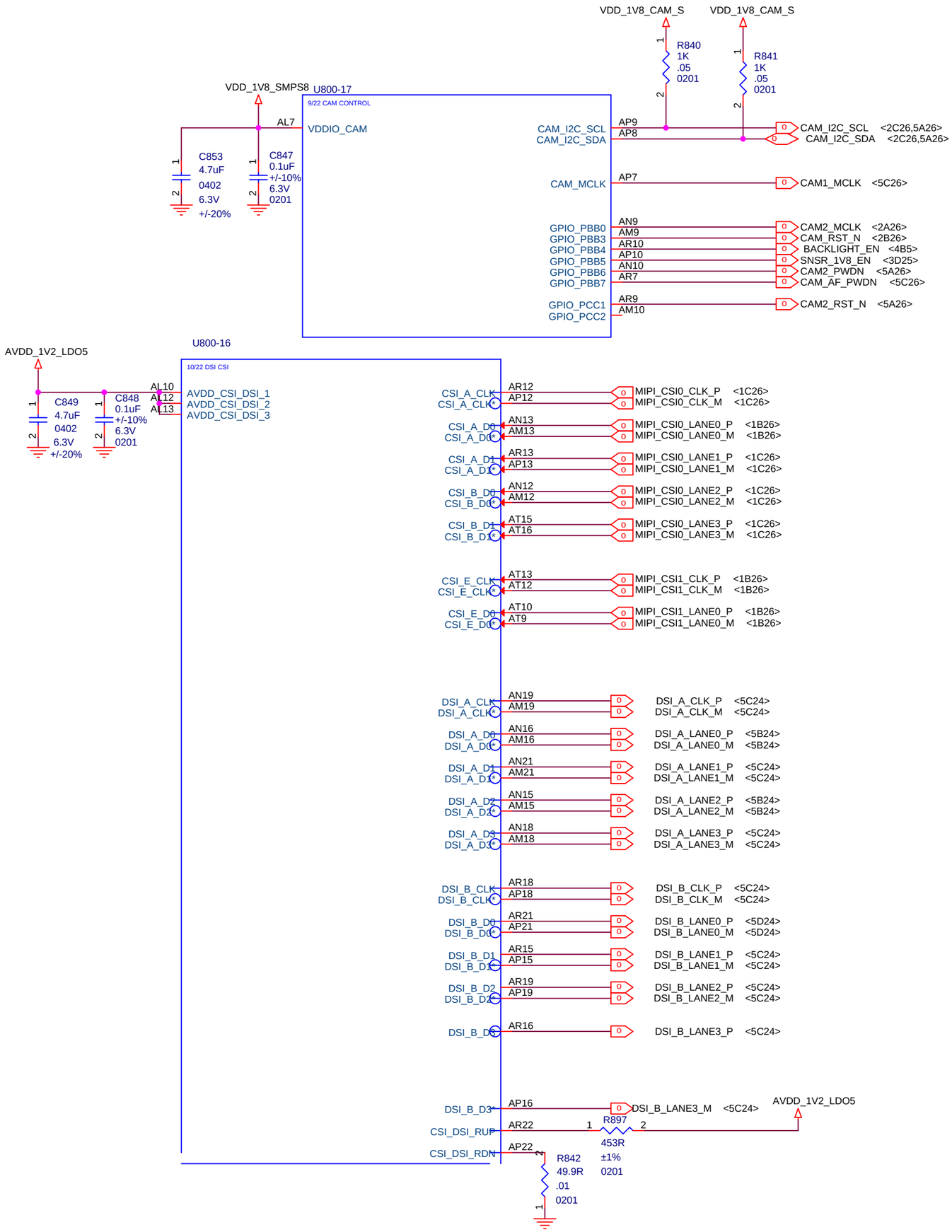

AP40 CAM CSI/DSI

Title	MI-THREE	
Size A3	Document Number <Doc>	Rev P2B
Date:	Sheet 19 of 26	

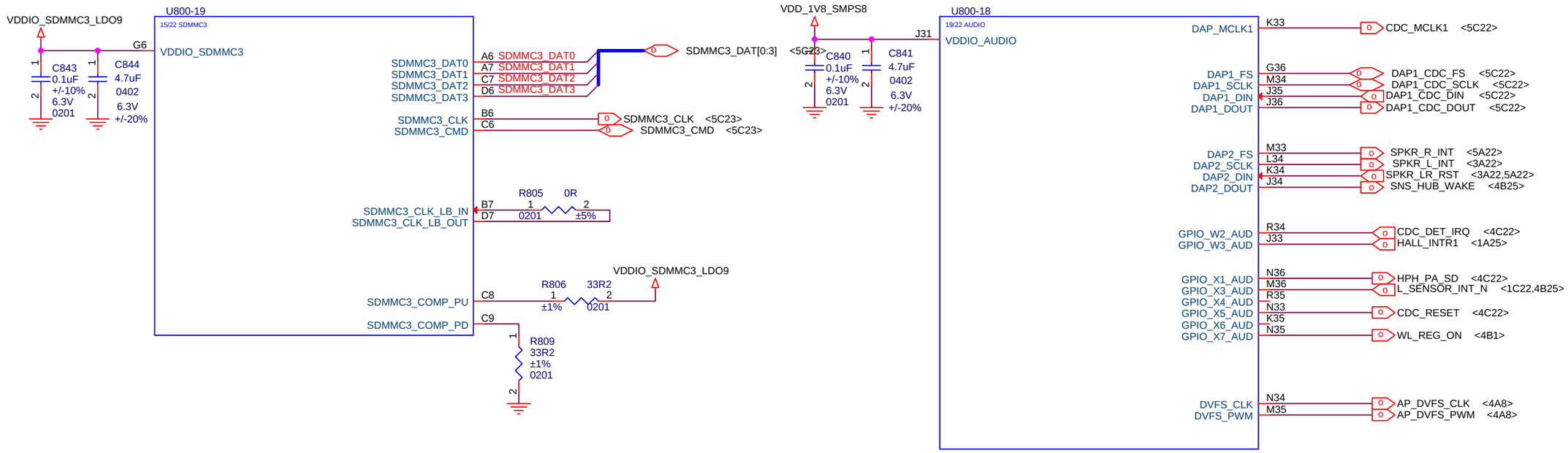

AP40 SD

Title: MI-THREE		
Size: A3	Document Number: <Doc>	Rev: P2B
Date:	Sheet 20 of 26	

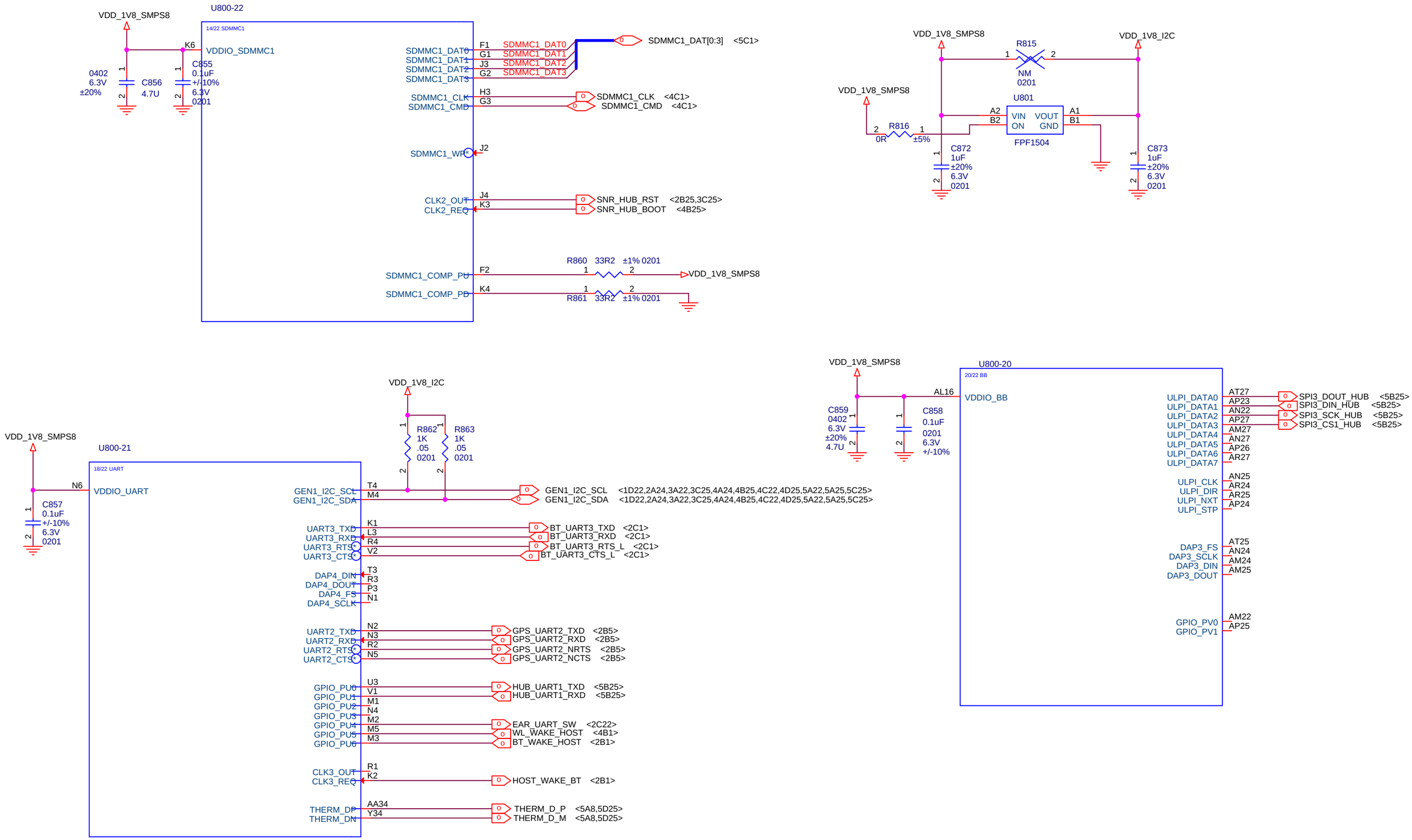

AP40 UARD&BB

Title	MI-THREE	
Size A3	Document Number <Doc>	Rev P2B
Date:	Sheet 21 of 26	

CODEC

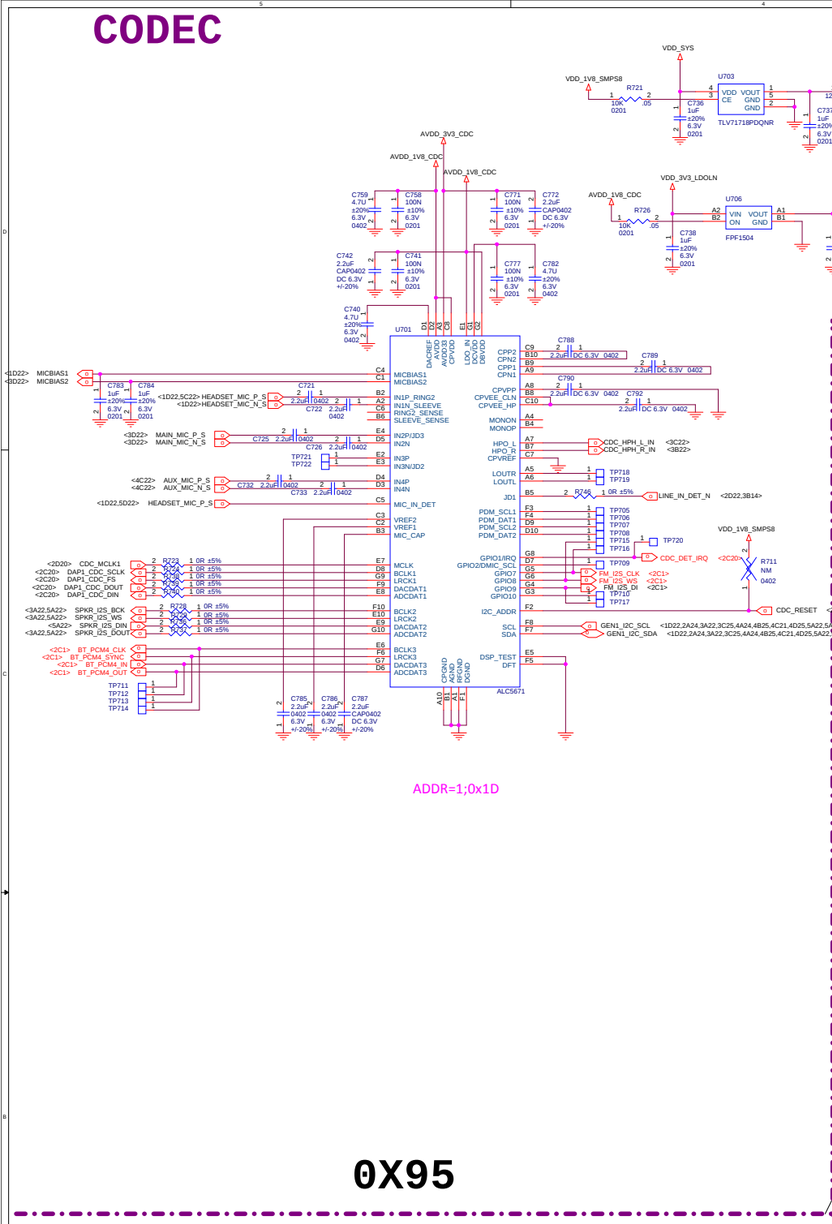

MAIN Mic

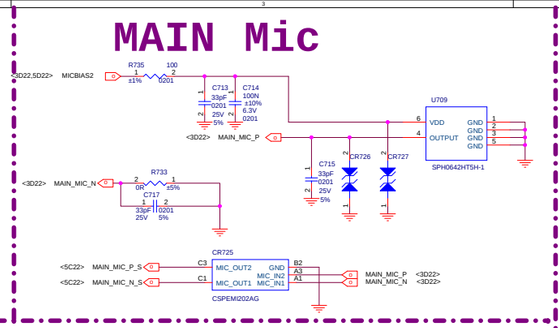

HEADSET

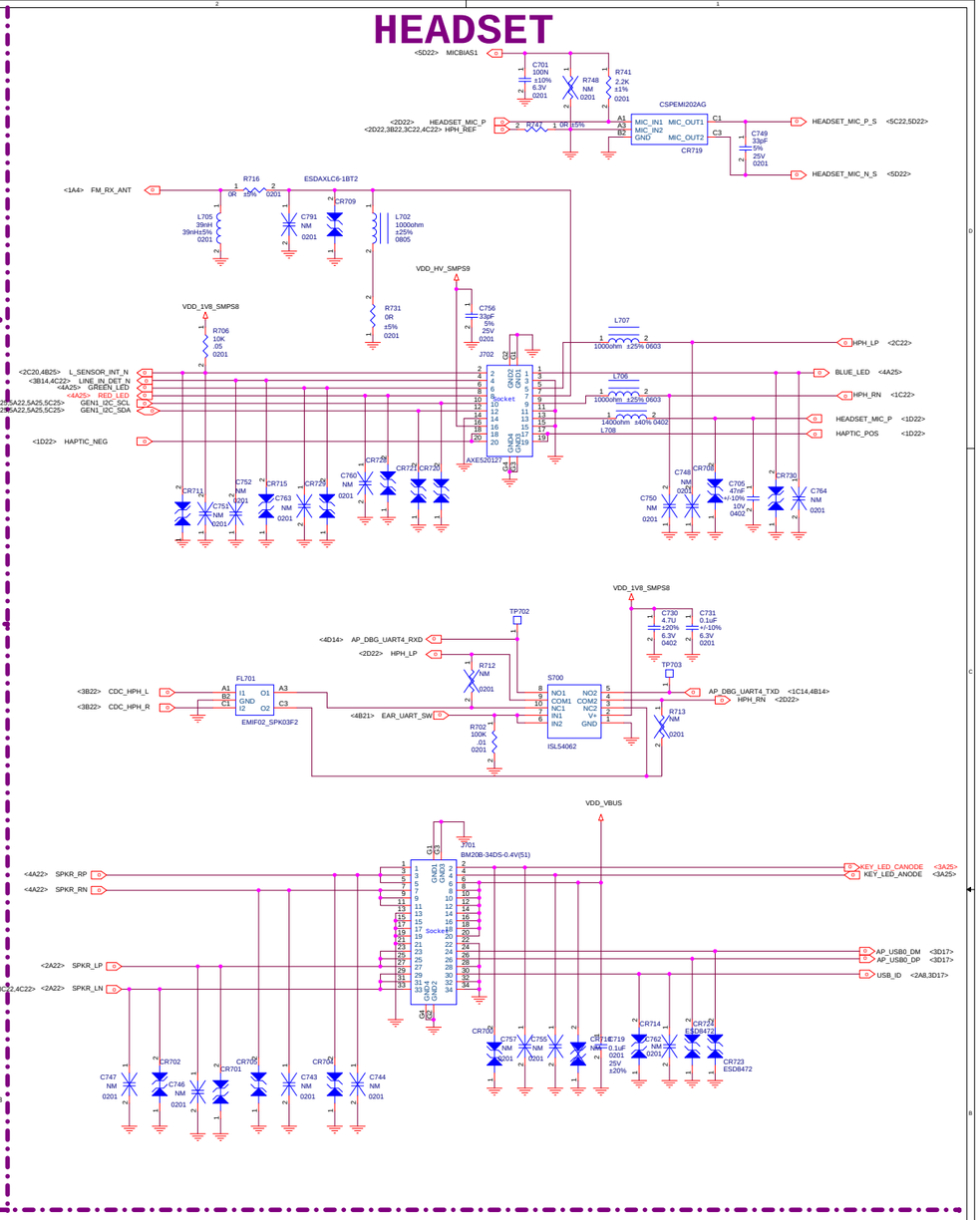

AUX Mic

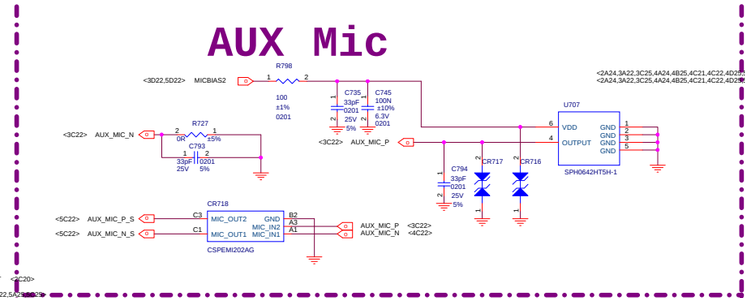

HEADPHONE PA

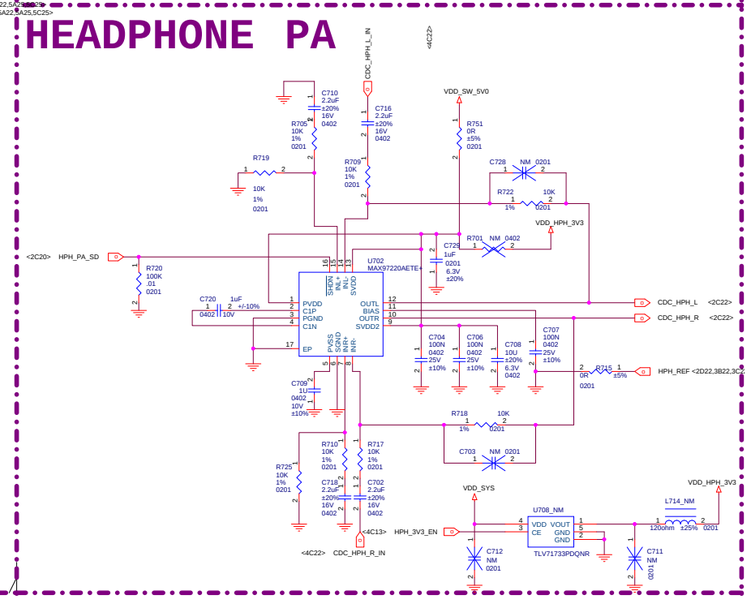

0X95

SPEAKER

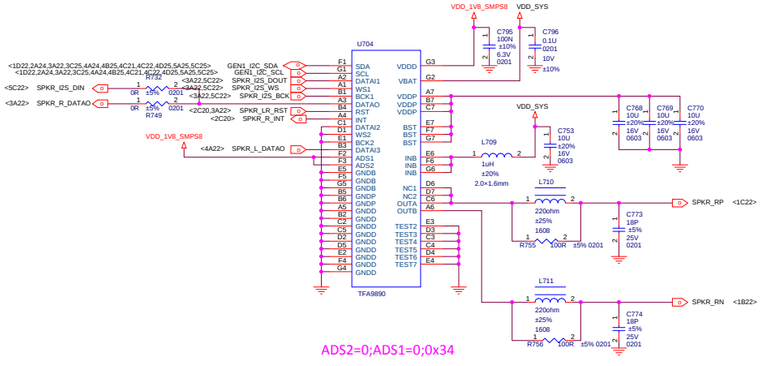

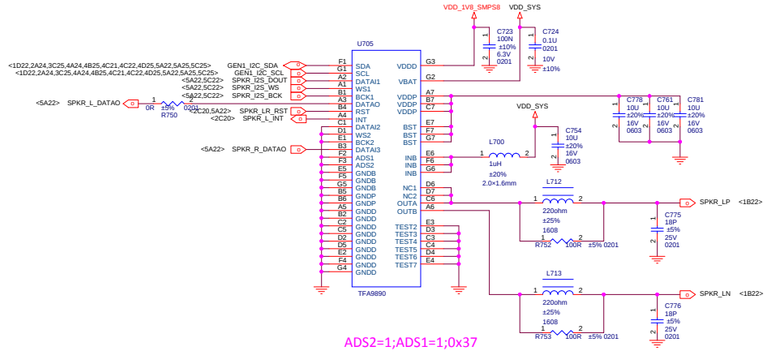

Title	<Title>		
Size A1	Document Number <Doc>		Rev P2B
Date: Wednesday, May 14, 2014	Sheet 22 of 26		

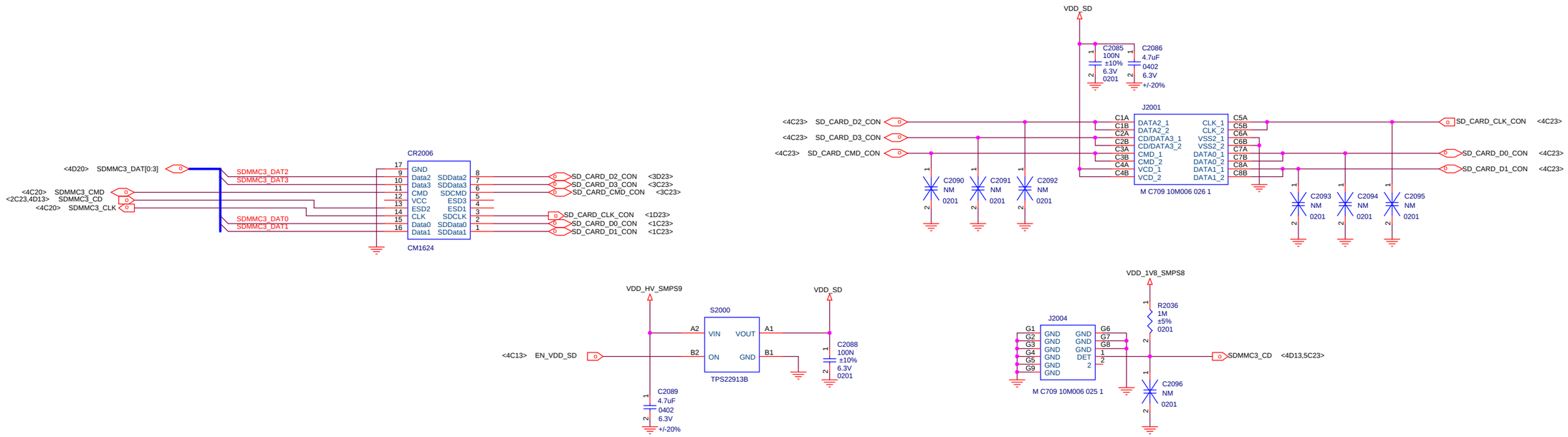

LCD

Title	MI-THREE	
Size A2	Document Number <Doc>	Rev P2B
Date:	Sheet 23 of 26	

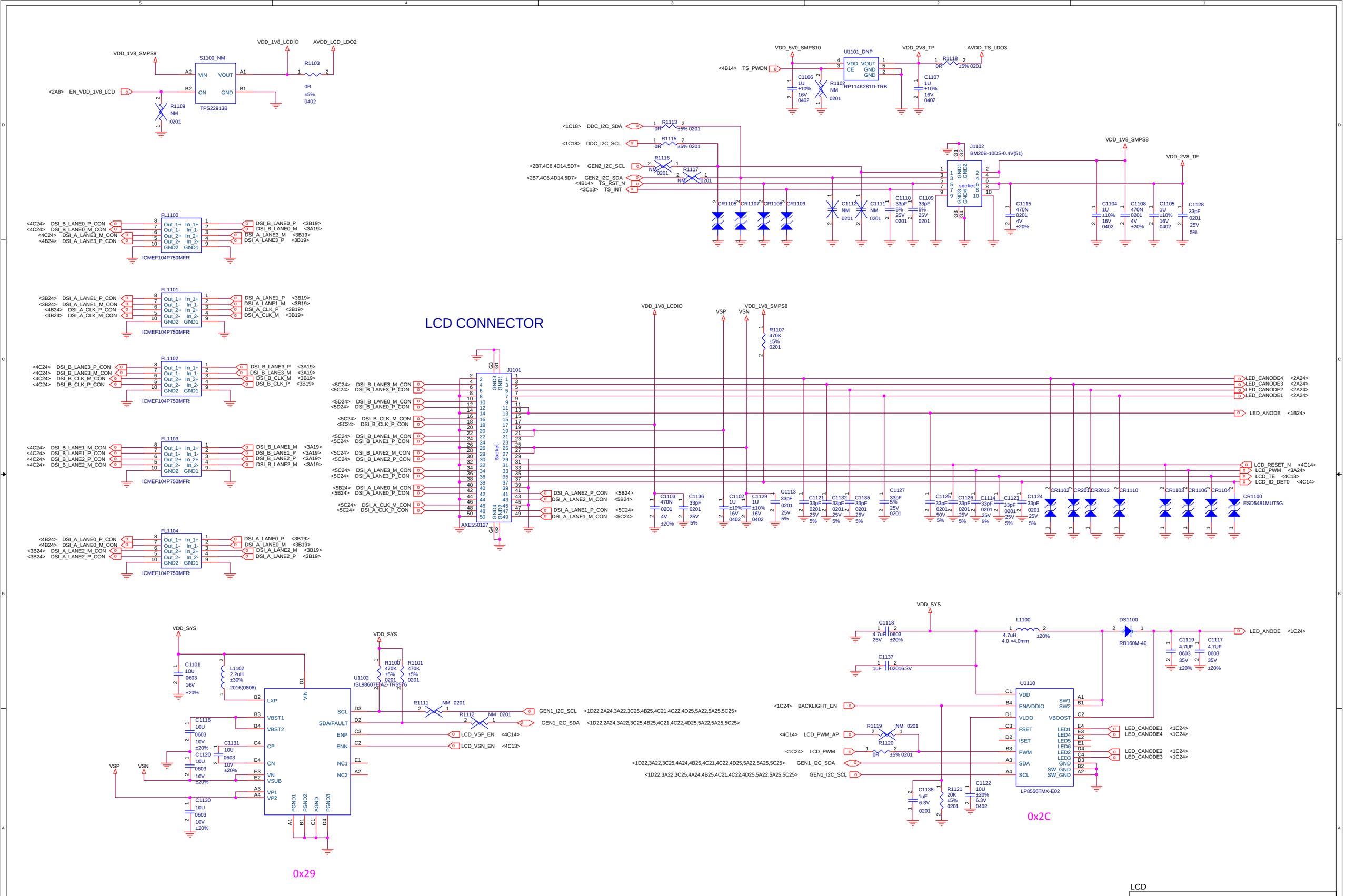

LCD

Title: MI-THREE

Size: A2 | Document Number: <Doc> | Rev: P2B

Date: | Sheet 24 of 26

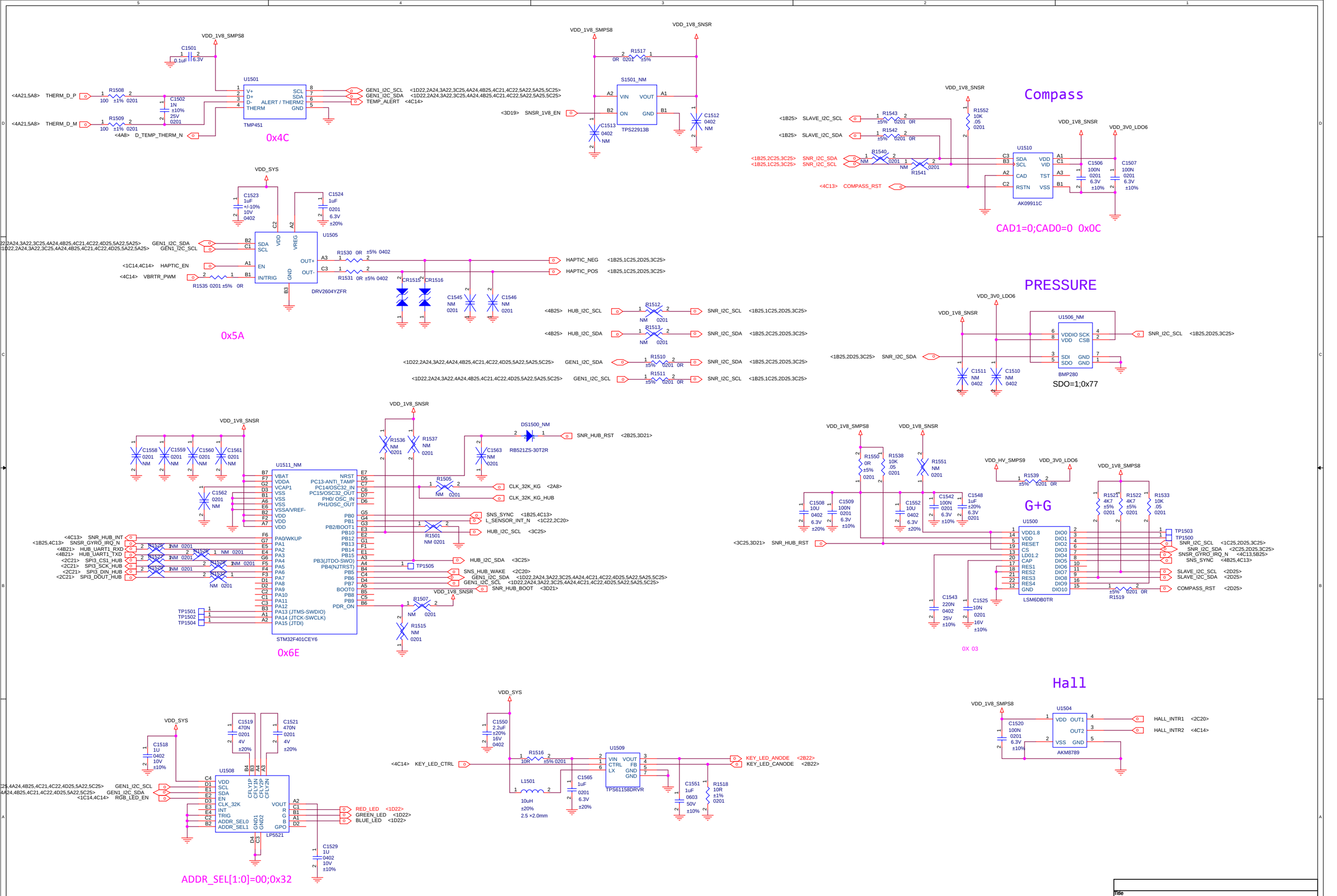

Title	<Title>	
Size A2	Document Number <Doc>	Rev B
Date:	Sheet 25 of 26	

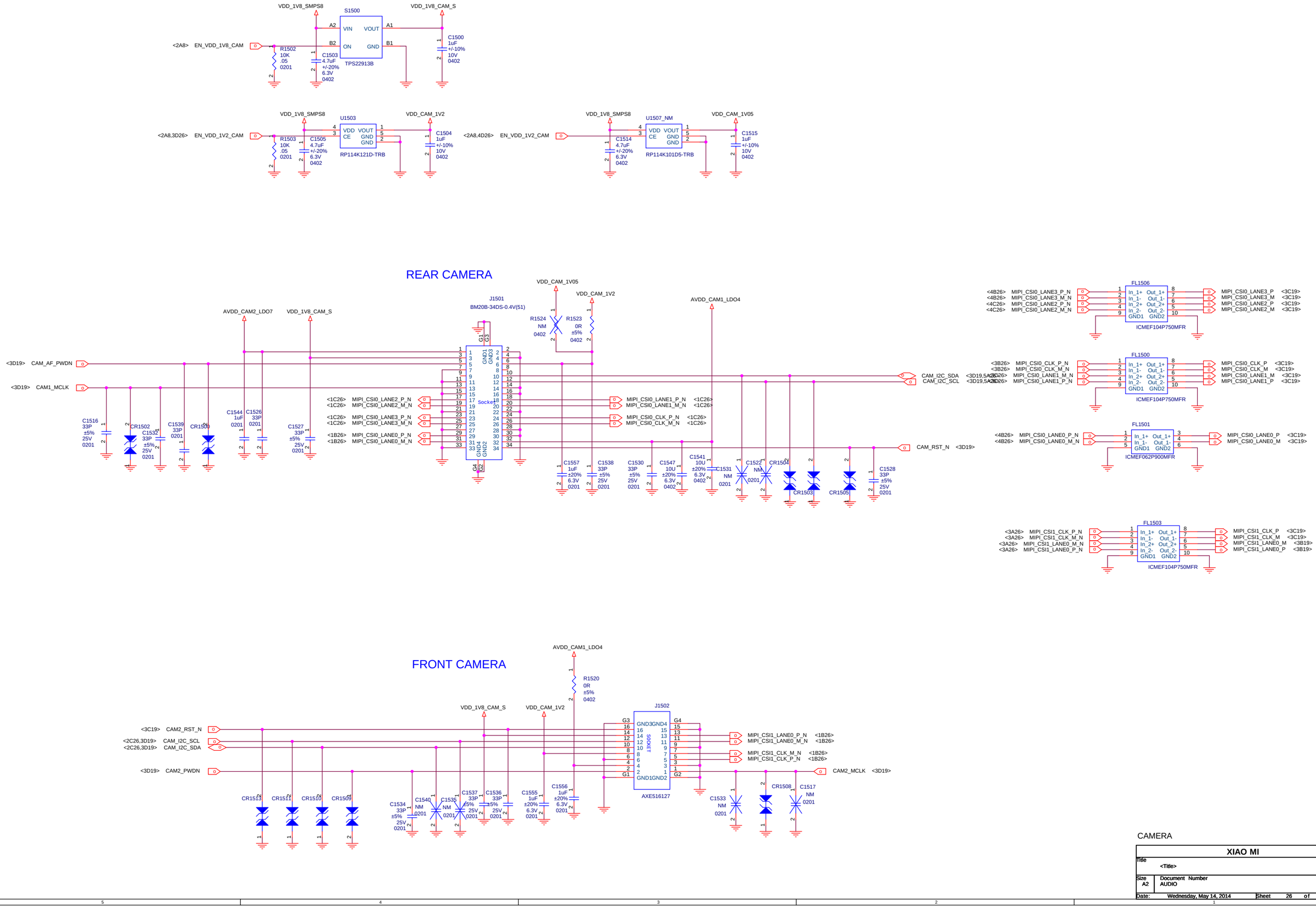

CAMERA

XIAO MI		
Title <Title>		
Size A2	Document Number AUDIO	Rev P2B
Date: Wednesday, May 14, 2014	Sheet 26 of 26	