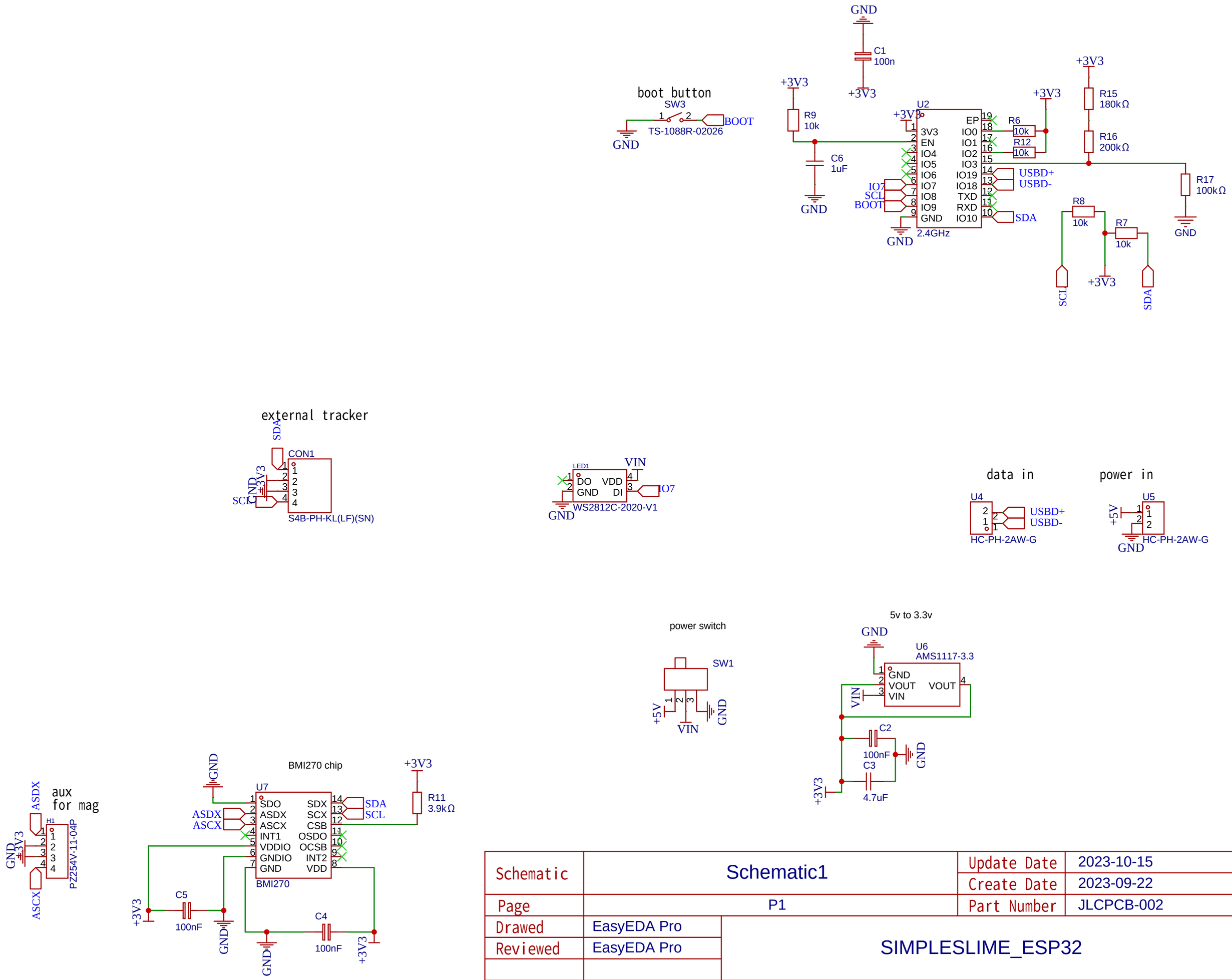

Schematic	Schematic1	Update Date	2023-10-15
		Create Date	2023-09-22
Page	P1	Part Number	JLCPCB-002
Drawed	EasyEDA Pro	SIMPLESLIME_ESP32	
Reviewed	EasyEDA Pro		
		VER	SIZE	PAGE 1 OF 1
EasyEDA		V0.1	A4	EasyEDA.com